Chapter 246-260 WAC
WATER RECREATION FACILITIES

WAC

246-260-001 Purpose and authority.
246-260-010 Definitions, abbreviations, and acronyms.
246-260-021 Construction permit.
246-260-031 General design, construction, and equipment for all WRF pool facilities.
246-260-041 Swimming pool design, construction, and equipment.
246-260-051 Spa pool design, construction, and equipment.
246-260-061 Special design and construction provisions for hotels and motels (transient accommodations) serving fewer than fifteen living units and for spas in individual hotel/motel rooms.
246-260-071 Wading pool design, construction, and equipment.
246-260-081 Spray pool design, construction, and equipment.
246-260-091 Specialty design features.

POOL OPERATION REQUIREMENTS

246-260-101 Operating permit.
246-260-111 Water quality standards, analysis, and sample collection.
246-260-121 Monitoring, reporting, and recordkeeping.
246-260-131 Operation of water recreation facilities.
246-260-141 Water recreation facility pools not in operation.
246-260-151 Restrictions on animals.

ADMINISTRATIVE RULES

246-260-171 Compliance.
246-260-180 Bathing beaches.
246-260-181 Surveillance.
246-260-191 Technical advisory committee.
246-260-201 Variance.
246-260-211 Enforcement.
246-260-221 Hearings.
246-260-9901 Fees.
246-260-998 Severability.
246-260-999 Appendix A—Water quality standards.
246-260-99901 Appendix B—Personnel training and certifications.
246-260-99902 Appendix C—First-aid kits for pool facilities.

DISPOSITION OF SECTIONS FORMERLY CODIFIED IN THIS CHAPTER

246-260-020 General administration. [Statutory Authority: RCW 43.20.050. 91-02-051 (Order 124B), recodified as § 246-260-020, filed 12/27/90, effective 1/31/91. Statutory Authority: RCW 70.90.120. 90-07-010 (Order 042), § 248-98-005, filed 3/12/90, effective 4/12/90.] Repealed by 04-18-096, filed 9/1/04, effective 10/31/04. Statutory Authority: Chapters 70.90 and 43.20 RCW.

246-260-030 Construction permit. [Statutory Authority: RCW 43.20.050. 91-02-051 (Order 124B), recodified as § 246-260-030, filed 12/27/90, effective 1/31/91. Statutory Authority: RCW 70.90.120. 90-07-010 (Order 042), § 248-98-010, filed 3/12/90, effective 4/12/90; Regulation .98.010, effective 3/11/60.] Repealed by 04-18-096, filed 9/1/04, effective 10/31/04. Statutory Authority: Chapters 70.90 and 43.20 RCW.

246-260-040 Operating permit. [Statutory Authority: RCW 70.90.-120. 92-02-020 (Order 226B), § 246-260-040, filed 12/23/91, effective 1/23/92. Statutory Authority: RCW 43.20.050. 91-02-051 (Order 124B), recodified as § 246-260-040, filed 12/27/90, effective 1/31/91. Statutory Authority: RCW 70.90.120. 90-07-010 (Order 042), § 248-98-015, filed 3/12/90, effective 4/12/90.] Repealed by 04-18-096, filed 9/1/04, effective 10/31/04. Statutory Authority: Chapters 70.90 and 43.20 RCW.

246-260-050 Compliance. [Statutory Authority: RCW 70.90.120. 92-02-020 (Order 226B), § 246-260-050, filed 12/23/91, effective 1/23/92. Statutory Authority: RCW 43.20.-050. 91-02-051 (Order 124B), recodified as § 246-260-050, filed 12/27/90, effective 1/31/91. Statutory Authority: RCW 70.90.120. 90-07-010 (Order 042), § 248-98-020, filed 3/12/90, effective 4/12/90; Regulation .98.020, effective 3/11/60.] Repealed by 04-18-096, filed 9/1/04, effective 10/31/04. Statutory Authority: Chapters 70.90 and 43.20 RCW.

246-260-060 Surveillance. [Statutory Authority: RCW 70.90.120. 92-02-020 (Order 226B), § 246-260-060, filed 12/23/91, effective 1/23/92. Statutory Authority: RCW 43.20.050. 91-02-051 (Order 124B), recodified as § 246-260-060, filed 12/27/90, effective 1/31/91. Statutory Authority: RCW 70.90.120. 90-07-010 (Order 042), § 248-98-025, filed 3/12/90, effective 4/12/90.] Repealed by 04-18-096, filed 9/1/04, effective 10/31/04. Statutory Authority: Chapters 70.90 and 43.20 RCW.

246-260-070 Water quality standards, analysis, and sample collection. [Statutory Authority: RCW 70.90.120. 92-02-020 (Order 226B), § 246-260-070, filed 12/23/91, effective 1/23/92. Statutory Authority: RCW 43.20.050. 91-02-051 (Order 124B), recodified as § 246-260-070, filed 12/27/90, effective 1/31/91. Statutory Authority: RCW 70.90.120. 90-07-010 (Order 042), § 248-98-030, filed 3/12/90, effective 4/12/90; Regulation .98.030, effective 3/11/60.] Repealed by 04-18-096, filed 9/1/04, effective 10/31/04. Statutory Authority: Chapters 70.90 and 43.20 RCW.

246-260-080 Monitoring, reporting, and recordkeeping. [Statutory Authority: RCW 70.90.120. 92-02-020 (Order 226B), § 246-260-080, filed 12/23/91, effective 1/23/92. Statutory Authority: RCW 43.20.050. 91-02-051 (Order 124B), recodified as § 246-260-080, filed 12/27/90, effective 1/31/91. Statutory Authority: RCW 70.90.-120. 90-07-010 (Order 042), § 248-98-035, filed 3/12/90, effective 4/12/90.] Repealed by 04-18-096, filed 9/1/04, effective 10/31/04. Statutory Authority: Chapters 70.90 and 43.20 RCW.

246-260-090 Swimming pool design, construction, and equipment. [Statutory Authority: RCW 70.90.120. 92-02-020 (Order 226B), § 246-260-090, filed 12/23/91, effective 1/23/92. Statutory Authority: RCW 43.20.050. 91-02-051 (Order 124B), recodified as § 246-260-090, filed 12/27/90, effective 1/31/91. Statutory Authority: RCW 70.90.120. 90-07-010 (Order 042), § 248-98-050, filed 3/12/90, effective 4/12/90; § 248-98-050, filed 10/3/67; Regulation .98.050, effective 3/11/60.] Repealed by 04-18-096, filed 9/1/04, effective 10/31/04. Statutory Authority: Chapters 70.90 and 43.20 RCW.

246-260-100 Operation of swimming pool facilities. [Statutory Authority: RCW 70.90.120. 92-02-020 (Order 226B), § 246-260-100, filed 12/23/91, effective 1/23/92. Statutory Authority: RCW 43.20.050. 91-02-051 (Order 124B), recodified as § 246-260-100, filed 12/27/90, effective 1/31/91. Statutory Authority: RCW 70.90.120. 90-07-010 (Order 042), § 248-98-060, filed 3/12/90, effective 4/12/90; Regulation .98.060, effective 3/11/60.] Repealed by 04-18-096, filed 9/1/04, effective 10/31/04. Statutory Authority: Chapters 70.90 and 43.20 RCW.

246-260-110 Spa pool design, construction, and equipment. [Statutory Authority: RCW 70.90.120. 92-02-020 (Order 226B), § 246-260-110, filed 12/23/91, effective 1/23/92. Statutory Authority: RCW 43.20.050. 91-02-051 (Order 124B), recodified as § 246-260-110, filed 12/27/90, effective 1/31/91. Statutory Authority: RCW 70.90.120. 90-07-010 (Order 042), § 248-98-040, filed 3/12/90, effective 4/12/90; Regulation .98.040, effective 3/11/60.] Repealed by 04-18-096, filed 9/1/04, effective 10/31/04. Statutory Authority: Chapters 70.90 and 43.20 RCW.

246-260-120 Operation of spa pool facilities. [Statutory Authority: RCW 70.90.120. 92-02-020 (Order 226B), § 246-260-120, filed 12/23/91, effective 1/23/92. Statutory Authority: RCW 43.20.050. 91-02-051 (Order 124B), recodified as § 246-260-120, filed 12/27/90, effective 1/31/91. Statutory Authority: RCW 70.90.120. 90-07-010 (Order 042), § 248-98-045, filed 3/12/90, effective 4/12/90.] Repealed by 04-18-096, filed 9/1/04, effective

10/31/04. Statutory Authority: Chapters 70.90 and 43.20 RCW.

246-260-130 Wading pool design, construction, and equipment. [Statutory Authority: RCW 70.90.120. 92-02-020 (Order 226B), § 246-260-130, filed 12/23/91, effective 1/23/92. Statutory Authority: RCW 43.20.050. 91-02-051 (Order 124B), recodified as § 246-260-130, filed 12/27/90, effective 1/31/91. Statutory Authority: RCW 70.90.120. 90-07-010 (Order 042), § 248-98-080, filed 3/12/90, effective 4/12/90; Regulation .98.080, effective 3/11/60.] Repealed by 04-18-096, filed 9/1/04, effective 10/31/04. Statutory Authority: Chapters 70.90 and 43.20 RCW.

246-260-140 Operation of wading pool facilities. [Statutory Authority: RCW 70.90.120. 92-02-020 (Order 226B), § 246-260-140, filed 12/23/91, effective 1/23/92. Statutory Authority: RCW 43.20.050. 91-02-051 (Order 124B), recodified as § 246-260-140, filed 12/27/90, effective 1/31/91. Statutory Authority: RCW 70.90.120. 90-07-010 (Order 042), § 248-98-085, filed 3/12/90, effective 4/12/90.] Repealed by 04-18-096, filed 9/1/04, effective 10/31/04. Statutory Authority: Chapters 70.90 and 43.20 RCW.

246-260-150 Spray pool design, construction, and equipment. [Statutory Authority: RCW 70.90.120. 92-02-020 (Order 226B), § 246-260-150, filed 12/23/91, effective 1/23/92. Statutory Authority: RCW 43.20.050. 91-02-051 (Order 124B), recodified as § 246-260-150, filed 12/27/90, effective 1/31/91. Statutory Authority: RCW 70.90.120. 90-07-010 (Order 042), § 248-98-090, filed 3/12/90, effective 4/12/90; Regulation .98.090, effective 3/11/60.] Repealed by 04-18-096, filed 9/1/04, effective 10/31/04. Statutory Authority: Chapters 70.90 and 43.20 RCW.

246-260-160 Operation of spray pool facilities. [Statutory Authority: RCW 70.90.120. 92-02-020 (Order 226B), § 246-260-160, filed 12/23/91, effective 1/23/92. Statutory Authority: RCW 43.20.050. 91-02-051 (Order 124B), recodified as § 246-260-160, filed 12/27/90, effective 1/31/91. Statutory Authority: RCW 70.90.120. 90-07-010 (Order 042), § 248-98-095, filed 3/12/90, effective 4/12/90.] Repealed by 04-18-096, filed 9/1/04, effective 10/31/04. Statutory Authority: Chapters 70.90 and 43.20 RCW.

246-260-170 Water recreation facility pools not in operation. [Statutory Authority: RCW 43.20.050. 91-02-051 (Order 124B), recodified as § 246-260-170, filed 12/27/90, effective 1/31/91. Statutory Authority: RCW 70.90.-120. 90-07-010 (Order 042), § 248-98-098, filed 3/12/90, effective 4/12/90.] Repealed by 04-18-096, filed 9/1/04, effective 10/31/04. Statutory Authority: Chapters 70.90 and 43.20 RCW.

246-260-200 Water recreation industry requirements. [Statutory Authority: RCW 70.90.120. 92-02-020 (Order 226B), § 246-260-200, filed 12/23/91, effective 1/23/92. Statutory Authority: RCW 43.20.050. 91-02-051 (Order 124B), recodified as § 246-260-200, filed 12/27/90, effective 1/31/91. Statutory Authority: RCW 70.90.-120. 90-07-010 (Order 042), § 248-98-100, filed 3/12/90, effective 4/12/90; Regulation .98.100, effective 3/11/60.] Repealed by 04-18-096, filed 9/1/04, effective 10/31/04. Statutory Authority: Chapters 70.90 and 43.20 RCW.

246-260-210 Technical advisory committee. [Statutory Authority: RCW 70.90.120. 92-02-020 (Order 226B), § 246-260-210, filed 12/23/91, effective 1/23/92. Statutory Authority: RCW 43.20.050. 91-02-051 (Order 124B), recodified as § 246-260-210, filed 12/27/90, effective 1/31/91. Statutory Authority: RCW 70.90.120. 90-07-010 (Order 042), § 248-98-102, filed 3/12/90, effective 4/12/90.] Repealed by 04-18-096, filed 9/1/04, effective 10/31/04. Statutory Authority: Chapters 70.90 and 43.20 RCW.

246-260-220 Restrictions on animals. [Statutory Authority: RCW 43.20.050. 91-02-051 (Order 124B), recodified as § 246-260-220, filed 12/27/90, effective 1/31/91. Statutory Authority: RCW 70.90.120. 90-07-010 (Order 042), § 248-98-104, filed 3/12/90, effective 4/12/90.] Repealed by 04-18-096, filed 9/1/04, effective 10/31/04. Statutory Authority: Chapters 70.90 and 43.20 RCW.

246-260-230 Variance. [Statutory Authority: RCW 43.20.050. 91-02-051 (Order 124B), recodified as § 246-260-230, filed 12/27/90, effective 1/31/91. Statutory Authority: RCW 70.90.120. 90-07-010 (Order 042), § 248-98-110, filed 3/12/90, effective 4/12/90; Order 715, § 248-98-110, filed 9/14/72.] Repealed by 04-18-096, filed 9/1/04, effective 10/31/04. Statutory Authority: Chapters 70.90 and 43.20 RCW.

246-260-240 Substitution. [Statutory Authority: RCW 70.90.120. 92-02-020 (Order 226B), § 246-260-240, filed 12/23/91, effective 1/23/92. Statutory Authority: RCW 43.20.-050. 91-02-051 (Order 124B), recodified as § 246-260-240, filed 12/27/90, effective 1/31/91. Statutory Authority: RCW 70.90.120. 90-07-010 (Order 042), § 248-98-120, filed 3/12/90, effective 4/12/90; Order 715, § 248-98-120, filed 9/14/72.] Repealed by 04-18-096, filed 9/1/04, effective 10/31/04. Statutory Authority: Chapters 70.90 and 43.20 RCW.

246-260-250 Enforcement. [Statutory Authority: RCW 70.90.120. 92-02-020 (Order 226B), § 246-260-250, filed 12/23/91, effective 1/23/92. Statutory Authority: RCW 43.20.050. 91-02-051 (Order 124B), recodified as § 246-260-250, filed 12/27/90, effective 1/31/91. Statutory Authority: RCW 70.90.120. 90-07-010 (Order 042), § 248-98-130, filed 3/12/90, effective 4/12/90.] Repealed by 04-18-096, filed 9/1/04, effective 10/31/04. Statutory Authority: Chapters 70.90 and 43.20 RCW.

246-260-260 Hearings. [Statutory Authority: RCW 70.90.120. 92-02-020 (Order 226B), § 246-260-260, filed 12/23/91, effective 1/23/92. Statutory Authority: RCW 43.20.-050. 91-02-051 (Order 124B), recodified as § 246-260-260, filed 12/27/90, effective 1/31/91. Statutory Authority: RCW 70.90.120. 90-07-010 (Order 042), § 248-98-135, filed 3/12/90, effective 4/12/90.] Repealed by 04-18-096, filed 9/1/04, effective 10/31/04. Statutory Authority: Chapters 70.90 and 43.20 RCW.

246-260-990 Fees. [Statutory Authority: RCW 43.70.040. 91-02-050 (Order 122), § 246-260-990, filed 12/27/90, effective 1/31/91.] Repealed by 94-11-056, filed 5/11/94, effective 6/11/94. Statutory Authority: RCW 70.90.150 and 43.20B.020.

WAC 246-260-001 Purpose and authority. (1) The purpose of this chapter is to protect the health, safety, and welfare of users of water recreation facilities (WRF). This chapter is established per RCW 70.90.120.

(2) This chapter does not apply to:

(a) Any water recreation facility for the sole use of residents and invited guests at a single-family dwelling;

(b) Any water recreation facility for the sole use of residents and invited guests of a duplex owned by the residents;

(c) Therapeutic water facilities operated exclusively for physical therapy or rehabilitation under the supervision of a licensed medical practitioner; and

(d) Steam baths and saunas.

(3) Requirements for recreational water contact facilities, including water slides, speed slides and wave pools are contained in chapter 246-262 WAC.

[Statutory Authority: Chapters 70.90 and 43.20 RCW. 04-18-096, § 246-260-001, filed 9/1/04, effective 10/31/04. Statutory Authority: RCW 43.20.050. 91-02-051 (Order 124B), recodified as § 246-260-001, filed 12/27/90, effective 1/31/91. Statutory Authority: RCW 70.90.120. 90-07-010 (Order 042), § 248-98-003, filed 3/12/90, effective 4/12/90.]

WAC 246-260-010 Definitions, abbreviations, and acronyms. The definitions in this section apply throughout this chapter unless the context clearly indicates otherwise.

(1) "ALTI" means Advanced Lifeguard Training International.

(2) "ANSI" means American National Standards Institute.

(3) "APHA" means American Public Health association.

(4) "Approved" means the department or local health officer has stated in writing that the design plans and specifications are in accordance with this chapter.

(5) "APSP" means Association of Pool and Spa Professionals.

(6) "ARC" means American Red Cross.

(7) "Architect" means a registered architect currently licensed under chapter 18.08 RCW in Washington state.

(8) "ASA" means American Standards Association.

(9) "ASHRAE" means American Society of Heating, Refrigeration and Air Conditioning Engineers.

(10) "ASTM" means American Society for Testing and Materials.

(11) "Attendant" means a person appointed by the owner or manager meeting the training requirements of this chapter who monitors activities and conditions for the purpose of ensuring bather safety.

(12) "AWWA" means American Waterworks Association.

(13) "Bathing beach" means a bathing place, together with buildings and appurtenances, on a natural pond, lake, stream, or other body of fresh or salt water that is open to the public for bathing by express permission of the owner, operated for a fee, or openly advertised as a place for bathing by the public.

(14) "Board" means the state board of health.

(15) "Branch line" means suction piping between a junction fitting and a suction outlet.

(16) "Commercial strength ammonia" means ammonia having a strength of twenty-six degrees Baume.

(17) "Communication system" means any combination of devices permitting the passage of messages between personnel and/or personnel and bathers. Systems can include but are not limited to two-way radios, hard wired intercoms, horns, whistles, hand signals, direct voice, signs, or equivalent.

(18) "Contaminant" means any physical, chemical, or biological substance present in the WRF water which may adversely affect the health or safety of the bather or the quality of the water.

(19) "CPR" means cardiopulmonary resuscitation.

(20) "CPSC" means U.S. Consumer Product Safety Commission.

(21) "Cross-connection" means any physical arrangement connecting:

(a) Potable water system directly or indirectly, with anything other than another potable water system; or

(b) WRF pool to any water source capable of contaminating either the WRF pool, its components, or potable water source as a result of backflow.

(22) "DE" means diatomaceous earth.

(23) "Department" means the Washington state department of health.

(24) "Deep water" means water greater than five feet in depth.

(25) "Diving envelope" means the minimum dimensions of an area within the pool necessary to provide entry from a diving board, platform, or pool decking intended for users to dive.

(26) "E&A" means Ellis and Associates.

(27) "Engineer" means a registered professional engineer currently licensed under chapter 18.43 RCW.

(28) "EPA" means U.S. Environmental Protection Agency.

(29) "Equalizer line outlet" means a suction outlet located on the pool wall below the waterline and connected by pipe to the body of a skimmer to prevent air from being drawn into the pump if the water level drops below the skimmer weir.

(30) "F" means Fahrenheit.

(31) "Fall zones" mean the areas under and around play toys where a person playing on them could fall. These areas should be free of obstacles or other equipment so that there's plenty of room. Basic guidelines include the following:

(a) Fall zones should extend a minimum of six feet in all directions from the perimeter of the play toy equipment.

(b) If the height of an adjacent play toy is thirty inches or more, the minimum distance between pieces of play equipment should be at least nine feet.

(32) "FINA" means Federation Internationale de Natation Amateur.

(33) "fps" means feet per second.

(34) "General use pool" means any swimming, spa, wading, or spray pool regulated by this chapter not meeting the definition of a "limited use pool."

(35) "gpm" means gallons per minute.

(36) "Handhold" means a structure not over twelve inches above the water line around the perimeter of the pool wall, affording physical means for the bather to grasp the pool sides.

(37) "IAPMO" means International Association of Plumbing and Mechanical Officials.

(38) "Illness or injury report" means the written record of all facts regarding an injury or illness associated with the WRF.

(39) "Innovative design feature" means a design feature, equipment, device, or operative procedure not specifically covered by these rules or chapter 246-262 WAC.

(40) "Junction fitting" means a pipe fitting in the shape of a "T" or a "Y" used to connect suction outlets to a pump or a balancing tank, and provides two branch line connections and one trunk line connection.

(41) "Licensed medical practitioner" includes medical doctor, osteopath, chiropractor, naturopath, and medical therapist currently licensed in Washington state.

(42) "Lifeguard" means a person meeting the training requirements of these rules appointed by the owner or manager to maintain surveillance over the bathers on the deck or in the pool and to supervise bather safety.

(43) "Lifeguard station" means designated work station of a lifeguard.

(44) "Lifesaving equipment" means emergency equipment and barrier protection.

(45) "Lifesaving Society" means the organization in Canada that establishes training requirements and standards for lifeguard training.

(46) "Limited use pool" means:

(a) Any swimming, spa, wading, or spray pool regulated by this chapter at an apartment, boarding home, condominium, fraternity, home owners association, hotel, mobile home park, motel, recreational vehicle park, sorority or rental housing unit for the use of the persons living or residing at the facility and their resident's invited guests.

(b) When organized programs are provided at the facility (including, but not limited to, formal swimming or diving les-

sons, swim meets, or exercise classes), for users besides those specified under the limited use category, the pool facility shall be considered to be a general use pool during periods of such activity.

(47) "Local health officer" means the health officer of the city, county, or city-county department or district or a representative authorized by the local health officer.

(48) "Main drain" means a submerged suction outlet for transferring water from a swimming pool, spa pool, or wading pool.

(49) "mg/l" means milligrams per liter. When requirements in this regulation specify limits for liquid volume measurements using mg/l or ppm, either may be used depending on the type of testing equipment available.

(50) "NAUI" means National Association of Underwater Instructors.

(51) "NSF" means National Sanitation Foundation.

(52) "NSPI" means National Spa and Pool Institute.

(53) "Outlet drain" means a drain for transferring water from a spray pool.

(54) "Owner" means a person owning and responsible for a WRF or their authorized agent.

(55) "PADI" means Professional Association of Diving Instructors.

(56) "Person" means an individual, firm, partnership, copartnership, corporation, company, association, club, government entity, or organization of any kind.

(57) "Physical plant" refers to pool shell, piping, lighting, ventilation, locker rooms, chemical storage rooms, mechanical rooms, or other structural facility components that are not readily modified. It does not include pumps, filters or disinfection systems.

(58) "Play toy" is a water feature added to a pool for use by bathers that provides activity or action that enhances the overall use of the water environment. Such feature may include, but not be limited to, fixed stationary features, inflatable or floatable equipment, or other equipment with the intent to invite bathers to play on or around the feature.

(59) "Pool" means swimming pool, wading pool, spray pool, or spa pool or the like.

(60) "ppm" means parts per million. See notation under mg/l for use.

(61) "Private club" means a group or organization requiring membership enrollment.

(62) "Radius of curvature" means the radius arc denoting the curved surface from the point of departure from the springline (vertical sidewall) of the pool to the pool bottom.

(63) "Response time" means time between bather distress and initiation of rescue assistance contact by a lifeguard in facilities providing lifeguards.

(64) "Recreational water contact facility" means an artificial water associated facility with design and operational features that provide patron recreational activity which is different from that associated with a conventional swimming pool and purposefully involves immersion of the body partially or totally in the water, and that includes but is not limited to water slides, wave pools, and water lagoons. These facilities are regulated by chapter 246-262 WAC.

(65) "Secretary" means the secretary of the department.

(66) "Serious injury" means any injury:

(a) Requiring emergency service response where a person requires medical treatment as determined by the emergency medical response personnel; or

(b) Resulting in a person seeking medical attention at a medical facility, hospital emergency room or admittance to a hospital.

(67) "Shallow water" means water equal to or less than five feet in depth.

(68) "Shallow water lifeguard" means a person appointed by the owner or manager to supervise bather safety in water depths not exceeding five feet who meets the training requirements of this chapter.

(69) "Spa pool" means a pool designed for relaxation or recreational use where the user is usually sitting, reclining, or at rest and the pool is not drained, cleaned, and refilled for each user. The spa pool may include, but not be limited to, hydrojet circulation, hot water, cold water, mineral baths, air induction bubbles in any combination.

(70) "Spray pool" means a pool or artificially constructed depression for use by bathers in which water is sprayed, but is not allowed to pond in the bottom of the pool.

(71) "Springline" means the point where the pool wall breaks from vertical and begins its arc in the radius of curvature (for cove construction) to the bottom of the pool.

(72) "Suction fitting standard" means the ANSI/APSP-16 2011, Suction Fittings for Use in Swimming Pools, Wading Pools, Spas, and Hot Tubs.

(73) "Suction outlet" means a fitting, fitting assembly and related components including the sump or bulkhead fitting, cover and hardware, that provides a localized low pressure area for the transfer of water from a water recreation facility. Types of suction outlets include main drains, equalizer line outlets, and submerged outlet drains.

(74) "Swimming pool" means any structure, basin, chamber, or tank containing an artificial body of water for swimming, diving, relaxation, or recreational bathing and having a depth of two feet or more at any point and including all associated facilities.

(75) "Swim spa" means a type of spa pool used primarily for stationary swimming.

(76) "Trunk line" means suction piping between a junction fitting and a pump or a balancing tank.

(77) "TU" means turbidity unit as measured by the nephelometric method.

(78) "Turnover time" means the minimum time necessary to circulate the entire volume of the pool facility through the treatment system.

(79) "UBC" means Uniform Building Code.

(80) "UL" means Underwriters' Laboratories.

(81) "Wading pool" means any artificial pool of water equal to or less than two feet deep and intended for wading purposes.

(82) "Walking surface" means any surface used as a direct access surface for a pool area and the walking surface's change room facilities where the user is barefoot.

(83) "Water treatment operator" means the appointed person operating the physical and mechanical equipment and performing related water quality monitoring and associated record keeping for proper operation of the physical facility.

(84) "Water recreation facility" means any artificial basin or other structure containing water used or intended to

be used for recreation, bathing, relaxation or swimming, where body contact with the water occurs or is intended to occur and includes auxiliary buildings and appurtenances. The term includes, but is not limited to:

(a) Conventional swimming pools, wading pools, and spray pools;

(b) Recreational water contact facilities as defined under RCW 70.90.110 and regulated under chapter 246-262 WAC;

(c) Spa pools and tubs using hot water, cold water, mineral water, air induction, or hydrojets; and

(d) Any area designated for swimming in natural waters with artificial boundaries within the waters.

(85) "WRF" means water recreation facility.

(86) "WRPA" means Washington Recreation and Parks Association.

(87) "WSDA" means Washington state department of agriculture.

(88) "YMCA" means Young Men's Christian Association.

[Statutory Authority: RCW 70.90.120. 12-17-102, § 246-260-010, filed 8/17/12, effective 9/17/12; 10-20-131, § 246-260-010, filed 10/5/10, effective 11/5/10. Statutory Authority: Chapters 70.90 and 43.20 RCW. 04-18-096, § 246-260-010, filed 9/1/04, effective 10/31/04. Statutory Authority: RCW 70.90.120. 92-02-020 (Order 226B), § 246-260-010, filed 12/23/91, effective 1/23/92. Statutory Authority: RCW 43.20.050. 91-02-051 (Order 124B), recodified as § 246-260-010, filed 12/27/90, effective 1/31/91. Statutory Authority: RCW 70.90.120. 90-07-010 (Order 042), § 248-98-001, filed 3/12/90, effective 4/12/90; Regulation .98.001, effective 3/11/60.]

WAC 246-260-021 Construction permit. (1) Prior to construction, alteration or modification of a WRF pool, except for routine maintenance, an owner shall obtain a construction permit. In order to obtain a construction permit, the owner shall submit a completed application package to the department or local health officer for review and approval. The application package shall include:

(a) A completed construction permit application form obtained from the department or local health officer; and

(b) Three sets of plans and specifications prepared, stamped and signed by an engineer or architect.

(2) Plans must be drawn to scale and in sufficient detail to completely illustrate that construction is in compliance with this chapter. The plans shall include:

(a) One plan view;

(b) One or more cross-sections through the main drain;

(c) Overall plan showing the pool in relation to other facilities in the area;

(d) Detailed view of the equipment layout and the associated room or location;

(e) A piping schematic showing piping configuration, pipe size, valves, inlets, main drains, over flow outlets, make-up water, and backwash from the filter;

(f) Dimensional drawings of pool bottom and sidewalls;

(g) Specifications of all required components; and

(h) Other information requested by the department or local health officer.

(3) Only applications and plans that the department or local health officer determines are complete may be considered for permit approval or denial. The department or the local health officer shall approve or deny a complete application within thirty days.

(4) Owners may submit a construction permit application proposing a WRF that incorporates innovative design features not specifically covered by these regulations or chapter 246-262 WAC. At least thirty days prior to development of final plans and specifications, the owner shall present their proposal at a preliminary design conference with the department or local health officer. The owners or their architects or engineers shall address the health and safety issues, including maintenance and operation of the proposed innovative design, and good engineering practice. The department or local health officer may require additional information and additional review or justification by a safety engineer or other qualified individual before approving or denying the application. An application for a construction permit for a water recreation facility may not be approved unless, notwithstanding a noncompliant design, the health and safety purposes behind the requirements of this chapter would be met. An applicant (or the architect or engineer acting on behalf of the applicant) shall provide adequate documentation to meet these requirements including, but not limited to:

(a) Protection from drowning, diving injury, entrapment, impact or falling hazards, tripping or slipping hazards;

(b) Maintenance of water and air quality, including equivalent disinfection, filtration, control of pH, physical water conditions, water clarity and prevention of contamination to preclude illness;

(c) Age appropriate designs and means to control these features for the appropriate range of users.

(5) Owners shall ensure any WRF construction, modification, or alteration is completed according to approved plans and specifications.

(6) Upon completion of WRF construction, modification, or alteration and before an operating permit is issued, owners shall:

(a) Submit to the department or local health officer a construction report signed by an engineer or architect stating that to the best of the engineer's or architect's knowledge and belief, the installation is in compliance with the approved plans. The engineer's and architect's certification of the above condition in no way relieves any other party from meeting requirements imposed by contract or other regulations, including commonly accepted industry practice; and

(b) Notify the department or local health officer at least five working days before intended use of the facility.

(7) The construction permit issued by the department or local health officer is valid eighteen months. The department or local health officer may grant construction permit renewals which are valid for one year. The owner is responsible to resubmit for a reapplication for a construction permit.

[Statutory Authority: Chapters 70.90 and 43.20 RCW. 04-18-096, § 246-260-021, filed 9/1/04, effective 10/31/04.]

WAC 246-260-031 General design, construction, and equipment for all WRF pool facilities. (See additional design and construction requirements for swimming pools in WAC 246-260-041, for spa pools in WAC 246-260-051 and 246-260-061, for wading pools in WAC 246-260-071, for spray pools in WAC 246-260-081 and for specialty design conditions in WAC 246-260-091. See chapter 246-262 WAC for specific requirements for water park type features.)

(1) **Location:** Owners shall locate pools to minimize surface drainage and other potential sources of pollution from entering the pool.

(2) **Materials:** Owners shall use only structure and equipment materials that are nontoxic, durable, inert, and easily cleanable.

(3) **Walking surfaces:** Owners shall design and maintain walking surfaces:

(a) Sloping away from the pool or pools;

(b) Sloping a minimum of one-fourth inch per foot to drain;

(c) Having a nonslip finish;

(d) Not having an abrupt change in height of greater than one-half inch, a gap no greater than one-half inch in width, or a crumbling surface presenting a potential tripping hazard;

(e) Equipped with sufficient drains to prevent standing water; and

(f) Of easily cleanable, impervious finishes.

(4) **Barriers for new construction and remodeling:**

(a) Owners shall provide barriers to prevent unauthorized persons from gaining access to pools. Spray pool facilities without standing water are exempt from barrier requirements of this section.

(b) Barriers at limited use pools must be at least sixty inches high.

(c) Barriers at general use pools must be at least seventy-two inches high.

(d) Barriers, including windows, (see figures 031.1 and 031.2) may not:

(i) Allow passage of a four-inch diameter sphere; or

(ii) Have spaces between vertical members greater than a width of one and three-quarter inches if the distance between the tops of horizontal members are spaced less than forty-five inches apart.

(e) Solid barriers may not have indentations or protrusions, other than normal construction tolerances and masonry joints.

(f) Barriers must have self-closing, self-latching gates or doors that provide either:

(i) A mechanism that uses a continuously locked latch, coded lock or other equivalent access control system that always requires a key or code to enter pool area. If the latch is less than sixty inches from the ground, the barrier must have an eighteen-inch radius of solid material around the latch (see figure 031.2) to preclude a child on the outside of the barrier from reaching through the gate or barrier and opening the latch and entering the pool; or

(ii) A latch height of sixty inches or more from the ground.

(g) Restricted area service entrances are exempt from door or gate requirements provided that no public access is available.

(h) Lifeguarded pools are not required to have a self-closing, self-latching gate during the period a pool is in use. Facility gates shall be closed and locked during nonuse periods.

(i) Barrier heights are measured on the side outside the pool enclosure area. Owners shall ensure that surrounding ground levels, structures, or landscaping do not reduce the effective height of the barrier.

Figure 031.1
Barrier Construction Detail

(a). For a Chain Link Fence:
The mesh size shall not exceed 1 1/4 inches square.

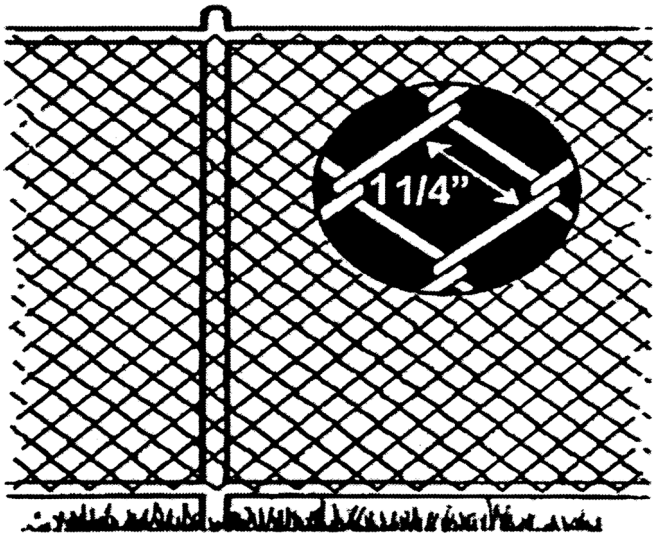

(b). When chain link exceeds 1 1/4 inches square, provide slats to reduce mesh openings to no more than 1 3/4 inches.

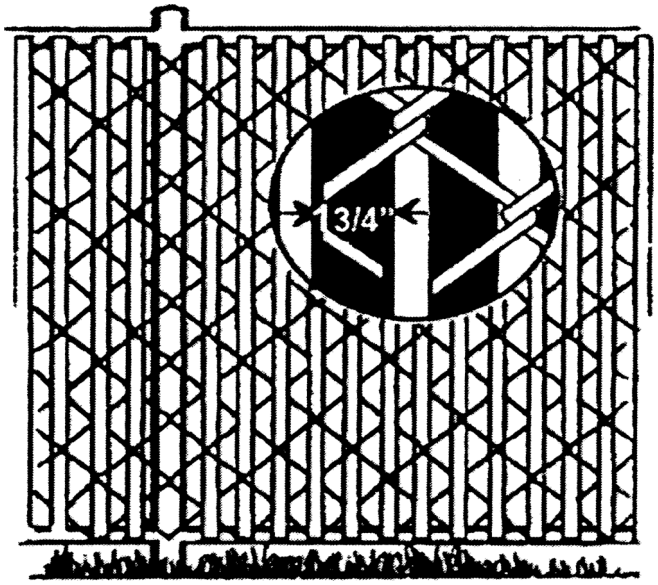

(c). Vertical Spacing: If tops of horizontal members are greater than 45 inches apart, vertical spacing shall not exceed 4 inches.

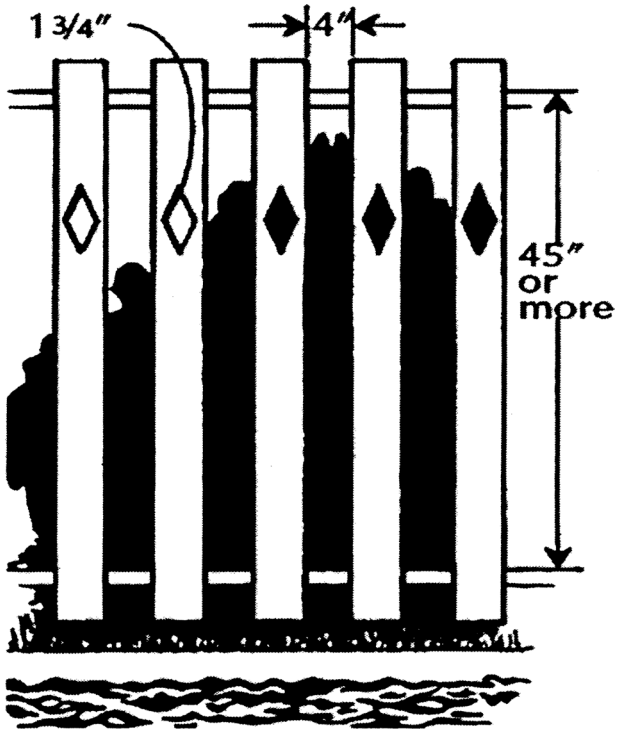

(d). Vertical Spacing: If tops of horizontal members are less than 45 inches apart, vertical spacing shall not exceed 1 3/4 inches.

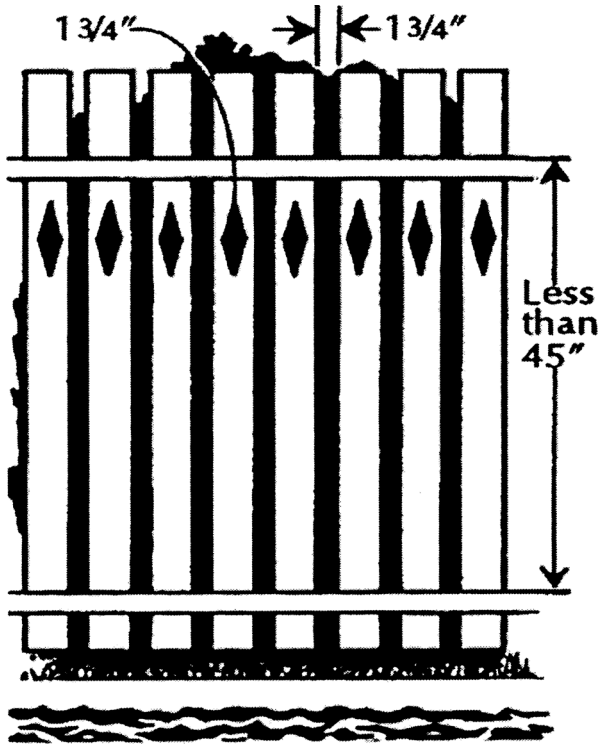

(e). Solid Barrier: No indentations or protrusions shall be present, other than normal construction tolerances and masonry joints.

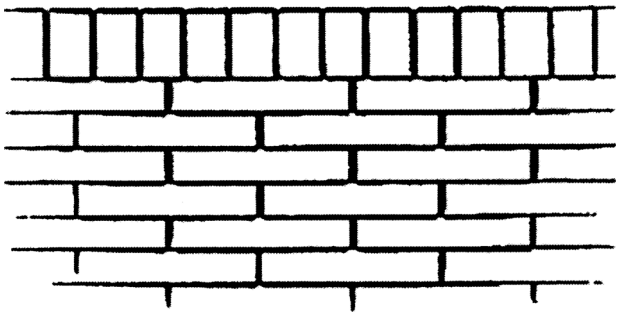

(f). Maximum Clearance shall not exceed 4 inches above grade.

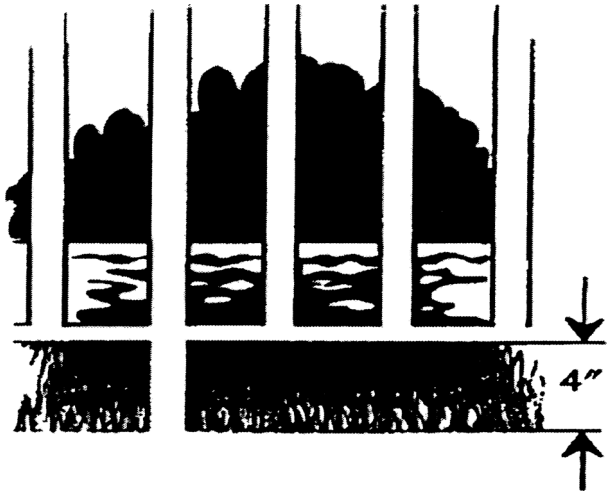

Figure 031.2 Gate and Latch Detail: When latch height is less than 60 inches from the ground, a continuously locked lock must be provided with an 18 inch radius of protection around the latch.

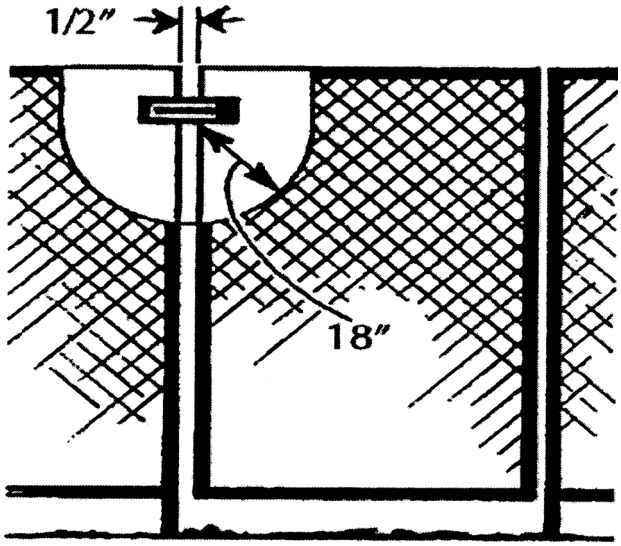

(5) **Barriers for existing facilities:** Before June 1, 2008, owners shall provide barriers for all pools conforming with subsection (4) of this section. Barrier modifications made prior to the compliance deadlines shall meet the requirements in subsection (4) of this section, at the time the modifications are made.

(6) **Pool surface:** Owners shall ensure pool surfaces are constructed and maintained to:

(a) Have white or light color finish;

(b) Not cause cutting, pinching, puncturing, entanglement, or abrasion hazard under casual contact; and

(c) Conform to ANSI/NSPI-1 2003 Standards for Public Swimming Pools or ANSI Standard NSPI-@-1999, American National Standard for Public Spas.

(7) **Inlets:** Owners shall provide pool inlets that are:

(a) Submerged;

(b) Located to produce uniform water and chemical circulation throughout the pool; and

(c) Located on the bottom of swimming and wading pools over twenty-five hundred square feet and spa pools greater than ten thousand gallons.

(8) **Outlets:**

(a) Except as provided in (f) and (g) of this subsection, owners shall provide pool outlets with:

(i) Overflow and main drain systems each designed to carry one hundred percent of the total recirculation filter flow;

(ii) Main drain piping systems designed to carry one hundred percent or more of total recirculation filter flow when a single pump is used or fifty percent or more of total recirculation filter flow when multiple pumps are used; and

(iii) Valving on main drain piping designed to provide required flow.

(b) Owners shall ensure that overflow outlets maintain a minimum of sixty percent of filter recirculation flow at all times.

(c) Overflow outlets must consist of an overflow channel on the perimeter of swimming pools twenty-five hundred square feet or more and spa pools ten thousand gallons or more, to promote uniform circulation and skimming action of the upper water layer with:

(i) A design preventing all matter entering the channel from returning to the pool;

(ii) Dimensions minimizing the hazard for bathers, such as catching arms or feet;

(iii) One one-hundredth of a foot slope per foot or more. However, adequate hydraulic justification from a designer to ensure the overflow system will meet (c)(v) of this subsection may be provided as an alternative;

(iv) Drains sufficiently spaced and sized to collect and remove overflow water to return line and filter, where applicable; and

(v) Size sufficient to carry one hundred percent of the recirculation flow plus the surge flow without flooding the overflow channel.

(d) Overflow outlets must consist of skimmers or overflow channels for pools less than twenty-five hundred square feet, or for spas under 10,000 gallons.

(i) Weirs provided in skimmers must have a normal operation flow rate of three to five gpm per inch of weir;

(ii) Skimmer equipment must be recessed in the pool wall so no part protrudes beyond the plane of the wall into the pool;

(iii) Skimmers must be equipped with a device, such as an equalizer line, to prevent air lock in the recirculation suction line. If equalizer lines are used, they must be protected with a suction outlet that conforms to the suction fitting standard;

(iv) Skimmers must be equipped with a removable and cleanable screen designed to trap large solids;

(v) Skimmers shall operate continuously with a minimum displacement rate of fifteen gallons per bather in swimming pools, twenty gallons in spa pools, and seven gallons in wading pools.

(e) Main drains in all pools must:

(i) Be located at swimming and wading pool low points;

(ii) Have piping designed so velocity in piping assuming one hundred percent of the pump recirculation flow does not exceed six fps up to the main drain outlet box;

(iii) Have covers on main drains with maximum flow of one and one-half feet per second;

(iv) Consist of two or more main drains for any pumped water recirculating system designed;

(A) Piping must be manifolded with junction fittings placed in the middle of branch line piping between main drains, so that the length of branch line piping is equal on each side of the junction fitting (see Figure 031.3);

Figure 031.3
Main Drain Branch Line Piping Detail

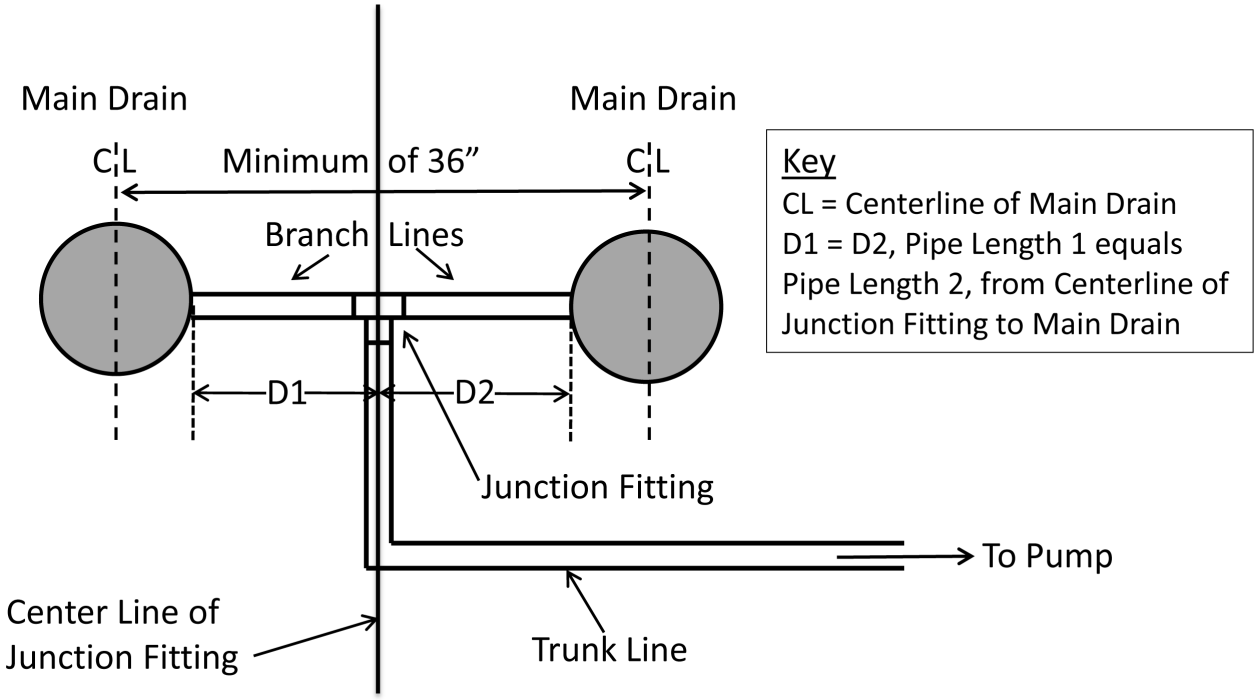

(B) Main drains must be spaced at least three feet apart, measured between the centers of the drain covers;

(C) Main drains must conform to the suction fitting standard;

(D) Multiple main drains must be designed so that if one main drain becomes blocked, the remaining main drains are rated to at least one hundred percent of the maximum pump flow; see Table 031.4.

Table 031.4
Main Drain Flow Rating Requirements

	Number of Main Drains Per Recirculation System			
	2	**3**	**4**	**5**
Main drain rated flow capacity must be at least equal to the percent of maximum pump flow indicated, depending on the number of main drains.	100%	50%	33.3%	25%

(f) Existing water recreation facilities may be modified to operate without main drains, provided that water quality and water clarity standards established in WAC 246-260-111 are met.

(g) New water recreation facilities may be constructed without main drains, provided that water quality and water clarity standards established in WAC 246-260-111 are met.

(9) **Pumps:** Owners shall provide and maintain recirculation pumps with adequate capacity to provide design flows for the entire operating and backwash cycles of the filter.

(10) **Strainers:** Owners shall provide hair and lint strainers for pumps that precede filters.

(11) **Pool appurtenances:**

(a) Owners shall ensure pools have:

(i) Handholds when the pool deck is greater than twelve inches above the water surface;

(ii) Stairs leading into spa pools;

(iii) Step risers on the exterior of the spa pool shall conform with UBC requirements for risers with nonslip tread finishes, when spas are elevated off the pool floor; and

(iv) Stairs, ladders, or stepholes for access at the shallow end of swimming pools.

(b) Owners shall ensure that stairs, when provided, meet the following construction requirements:

(i) Nonslip tread finish;

(ii) Contrasting color stair tread edges;

(iii) Placement recessed into the side of pools specifically designed for lap or competitive swimming;

(iv) Handrail having leading edges less than eighteen inches beyond and less than eight inches inside (horizontally) the vertical plane of the bottom riser;

(v) Each riser tread shall have a minimum unobstructed, tread depth of ten inches and minimum surface area each of two hundred forty inches;

(vi) Uniform riser heights of seven and one-half inches or less on general use swim pools fifteen hundred square feet or more and spa pools greater than forty feet in perimeter,

except the bottom riser may be less than the uniform height; and

(vii) Uniform riser heights of ten inches or less for all other pools, except the bottom riser may be plus or minus two inches of the uniform height.

(c) Ladders or stepholes at swimming pools shall be:

(i) Spaced at a minimum of one for every seventy-five feet of swimming pool perimeter deeper than four feet;

(ii) Provided at both sides of the deep end of swim pools over thirty feet in width; and

(iii) Equipped with handrails.

(12) **Valves:** Owners shall provide valves to allow isolation and maintenance of equipment.

(13) **Balancing tanks:** Owners shall provide balancing tanks for pools designed with overflow channels. Balancing tanks must be of adequate size to prevent air lock in the pump suction line and have sufficient capacity to prevent flooding of the overflow channel.

(14) **Equipment and chemical storage rooms:** Owners shall provide enclosed, locked, lighted, vented rooms for mechanical equipment, with floors sloped to a floor drain and minimum access area three feet wide around equipment. Owners shall provide a separate chemical storage area or room that conforms to manufacturer's requirements for each chemical used in the pool area.

(15) **Make-up water:** Owners shall ensure an adequate supply of make-up water with associated piping, for each pool:

(a) Sufficient to replace daily pool losses;

(b) From a supply conforming to chapter 246-290 WAC;

(c) Without cross connections; and

(d) If using a pool fill spout, the spout may not project greater than one inch into the space above the water surface and shall be shielded so as not to create a deck hazard.

(16) **Filters:**

(a) Owners shall equip pools with filtration equipment:

(i) Meeting the applicable standards of NSF (for commercial application) or equivalent;

(ii) With a rate of flow indicator and gauge(s) for monitoring backpressure on filter;

(iii) With a means of discharging filter backwash to waste with a sight glass in a manner not creating a cross connection or a public nuisance;

(iv) With a means to release air entering the filter tank for pressure filters.

(b) If cartridge filters are used, owners shall always possess an extra set of cartridges and may not use cartridge filters with bypass valves.

(17) **Disinfection equipment:**

(a) Owners shall provide disinfection equipment:

(i) Providing a continuous and effective disinfectant residual;

(ii) Using a disinfectant with an easily monitored residual;

(iii) Having a design feed rate providing effective disinfection levels for peak demand conditions; and

(iv) Conforming to NSF standard 50 if disinfection chemical is other than gas chlorine.

(b) If disinfection equipment has adjustable output rate chemical feed of liquid solutions, the equipment shall:

(i) Feed under positive pressure in the recirculation system;

(ii) Provide a means for dosage adjustment; and

(iii) If the disinfection equipment is above pool water surface level, have provisions to prevent disinfectant solution siphoning when equipment is turned off.

(c) Solid tablets or granules may not be placed in skimmer basket.

(d) Rooms holding chlorine gas equipment must:

(i) Be above ground level;

(ii) Be constructed so all openings or partitions with adjoining rooms are sealed;

(iii) Be located with consideration of prevailing winds to dissipate leaked chlorine away from the pool facility;

(iv) Have door(s) opening only outward to the out-of-doors; and

(v) Have a sign on the door exterior reading **DANGER CHLORINE** in large enough letters to be read twenty-five feet away.

(e) Chlorine rooms must have mechanical exhausting ventilation that includes:

(i) Air inlets located as far as possible from fan intakes to promote good air circulation patterns;

(ii) A minimum of one air change per minute in the chlorine room when fan is operating;

(iii) A remote switch outside the room or a door-activated switch to turn on fan before entering;

(iv) Suction for fan near the floor;

(v) Exhaust vents located to prevent chlorine contaminated air from being drawn into supply air; and

(vi) Screened chlorinator vents.

(f) Gas chlorine systems must:

(i) Be vacuum injection type, with vacuum-actuated cylinder regulators;

(ii) Provide integral backflow and antisiphon protection at the injector;

(iii) Have taring (net weight of cylinder gas) scales for determining chlorine weight; and

(iv) Have a means for automatic shutoff when water flow is interrupted.

(g) A self-contained breathing apparatus designed for use in chlorine atmospheres caused by chlorine leaks must be available in an area accessible to the operator outside the chlorine room. The apparatus must be maintained in accordance with department of labor and industry standards. If procedures are established for immediate evacuation and the owner has a written agreement with emergency service fire districts or other approved organizations within the area for promptly responding to chlorine leaks, then breathing protection is not required at the pool facility.

(h) Chlorine gas cylinders must:

(i) Be stored only in designated chlorine rooms;

(ii) Have an approved valve-stem cylinder wrench on the valve stem to shut the system down in an emergency event;

(iii) Be properly secured to prevent tipping;

(iv) Be tagged to indicate cylinders are empty or full; and

(v) Not exceed one hundred fifty pounds tare weight per cylinder.

(i) Owners shall ensure that chemical disinfectants are not hand-fed into pools actively in use. *Exception*, chemical disinfectants may be hand-fed on an emergency basis if no

users are in the pool and the pool is tested to meet water quality standards before reentry.

(j) If ozone is provided as a supplemental disinfection process:

(i) When ozone is produced by corona discharge method, the area where the ozone is produced shall meet the requirements of (e) of this subsection, unless field tests demonstrate no hazardous off-gassing of product;

(ii) When ozone is produced by ultraviolet light, it may be allowed in the mechanical room provided there are no levels of off-gassing exceeding 0.05 ppm;

(iii) Provide an ozone detector and alarm with corona discharge ozone generators;

(iv) Provide sufficient contact chambers to prevent excess levels of ozone from entering the pool water; and

(v) Testing equipment must be provided to monitor levels in the water and the atmosphere immediately above the water and the room where the ozone is produced.

(k) If copper or copper/silver is provided as a supplemental disinfection process:

(i) The output rate and method of controlling process levels into the pool facility must be provided;

(ii) The system shall not have a detrimental effect on maintaining proper turnover rates for the pool; and

(iii) Testing equipment provided to monitor levels of copper and silver in the pool water.

(18) **Chemical feeding equipment for pH control:** Owners shall provide chemical feed equipment for pH control, with a means of automatic shutoff if water flow is interrupted, for:

(a) Swimming pools fifty thousand gallons or greater;

(b) Spa pools ten thousand gallons or greater; and

(c) All pools treated with caustic soda or carbon dioxide.

(19) **Ventilation:** Owners shall provide adequate ventilation (in conformance with ASHRAE standards for pools and decks) to maintain air quality and to prevent moisture buildup in indoor areas. Design considerations must include maintaining negative pressure in the pool and deck area; providing adequate total airflow for acceptable air distribution; and preventing short-circuiting of fresh air return to exhaust.

(20) **Locker room and dressing rooms:**

(a) Owners shall provide general use pool facilities with locker rooms and dressing rooms having:

(i) Separate facilities for each gender constructed to block line of sight into locker rooms;

(ii) Water impervious nonslip floors properly sloped to drains to prevent standing water;

(iii) Easily cleanable walls, lockers, and benches (if provided);

(iv) Junctions between walls and floors coved for ease of cleaning; and

(v) Properly anchored lockers, (if provided), to prevent tipping.

(b) Owners shall provide limited use pool facilities with locker or dressing rooms meeting the requirements of (a) of this subsection if the pool facilities are located more than one-quarter mile from any served living units.

(c) Owners shall provide general use recirculating spray pool facilities with locker or dressing rooms meeting the requirements of (a) of this subsection if the pool facilities are located indoors.

(21) **Restrooms, shower rooms, and plumbing fixtures:**

(a) Owners shall provide general use pool facilities with restroom and shower room facilities having plumbing fixture types and numbers as described in Table 031.5 of this section (swim and wading pool bathing loads and spa bather capacity are additive for determining total bather load). The pool facility design shall provide users easy access to restroom and shower facilities with minimum nonuser cross traffic.

(b) Owners shall provide general use pool facilities with:

(i) Hose bibs with vacuum breakers around pool decks at a maximum spacing of one hundred fifty feet; accessible to each locker room; and within equipment room at facilities fifteen hundred square feet or more;

(ii) A janitor's sink at indoor facilities with a pool of fifteen hundred square feet or more; and

(iii) An operable drinking fountain conforming to ASA requirements at facilities with a pool fifteen hundred square feet or more.

(c) Owners shall provide limited use pool facilities with:

(i) Restroom and shower room facilities having plumbing fixture types and numbers as described in Table 031.5 of this section, if bathing load exceeds eighty persons;

(ii) Restroom and shower room facilities having plumbing fixture types and numbers as described in Table 031.6 of this section, if bathing load is eighty persons or less;

(iii) Hose bibs around pool decks at a maximum spacing of one hundred fifty feet;

(iv) A hose bib accessible to each locker room; and

(v) A hose bib within each equipment room at facilities with a pool of fifteen hundred square feet or more.

Table 031.5

Restroom Minimum Requirements* for General Use Pools
(Includes swimming, spa, and wading pools**)

Amount of Fixtures Required for Occupancy Load by Sex		
TYPE OF FIXTURES	MALE	FEMALE
Toilets up to 120	1/60	1/40
From 121-360	1/80	1/60
Over 360 add	1/150	1/100
Urinal up to 120	1/60	N/A
From 121-360	1/80	N/A
From 360 add	1/150	N/A
Showers up to 120	1/40	1/40
From 121-360	1/60	1/60
Over 360 add	1/100	1/100
Sinks up to 200	1/100	1/100
From 201-400	1/200	1/200
Over 400 add	1/400	1/400
Diaper changing station	1	1

* If sufficient supporting documentation is provided, restroom fixture numbers may be adjusted between the genders based on proposed use of the facility. (E.g., if the designer has experience and justification based on similar type facilities indicating that providing one additional shower for the women and one less for men would provide a sufficient number of fixtures to meet demands, this may be allowed.)

** If a general use spa or wading pool is the only pool at the facility, then a minimum of only one toilet, shower, and sink is required for each gender.

Table 031.6
Restroom Minimum Requirements for Limited Use Pools
(Includes swimming, spa, and wading pools.)

POOLS WITH:	TOILETS	SHOWERS	SINKS	DRESSING ROOMS	DIAPER CHANGING STATION
Living units*within 100 feet and less than three stories	-	-	-	-	-
Living units > 100 feet but < 500 feet and less than 3 stories	1	1**	1	-	1
Living units within 1/4 mile and/or with three or more stories	1	1	1	-	1
Living units greater than 1/4 mile	1(M) 1(F)	1(M) 1(F)	1(M) 1(F)	1(M) 1(F)	1(M) 1(F)

* "Living units" means all the units the facility serves.
** A shower is required only if a spa is present.

(d) Owners shall provide general use recirculating spray pool facilities with:

(i) Separate restroom facilities for each sex containing at least one toilet and handwashing sink;

(ii) Hose bibs around pool decks at a maximum spacing of one hundred fifty feet; and

(iii) Additional plumbing fixtures, if indoors, conforming to the requirements for general use pools described in Table 031.5 of this section.

(e) Owners shall provide limited use recirculating spray pool facilities with:

(i) Hose bibs around pool decks at a maximum spacing of one hundred fifty feet; and

(ii) A restroom facility containing at least one toilet and one handwashing sink, if living units served are farther than one hundred feet away from the main pool.

(f) Restroom facilities must be located convenient to, and no further than one hundred feet away from, the main pool. They must have flush toilets provided with toilet tissue in dispensers and handwashing sinks including:

(i) Hot and cold or tempered water delivered through a mixing faucet with a maximum temperature of one hundred twenty degrees Fahrenheit;

(ii) Single service soap in a nonglass dispenser;

(iii) Single service towels or electric hand dryer; and

(iv) A minimum running water cycle of at least ten seconds if the faucets have self-closing valves.

(g) Shower facilities must be located convenient to, and no more than one hundred feet away from, the main pool. The facilities must have:

(i) A design allowing a full-body shower in the nude;

(ii) A design providing an enclosure confining water to the shower area;

(iii) Nonslip floor impervious to water with sufficient drains to prevent water from standing within the shower areas;

(iv) Running water delivered at a temperature between ninety degrees and one hundred twenty degrees Fahrenheit;

(v) Single service soap in a nonglass dispenser; and

(vi) Wall surfaces impervious to water up to shower head height.

(h) If owners limit the number of bathers within their facility and post and enforce the maximum bather load, owners may base the number of required plumbing fixtures on the posted maximum bather load.

(i) Owners shall dispose of all wastewater in a manner approved by the local health officer.

(22) **Diaper changing stations:** Owners shall provide a diaper changing station, including a handwashing sink conforming to the requirements in subsection (21)(f) of this section, accessible to all bathers, if children in diapers are allowed in the pool facility and the facility is:

(a) A general use pool facility; or

(b) A limited use pool facility located more than one hundred feet away from living units served.

(23) **Lighting:** Owners shall design and maintain pool facility lighting to a minimum level as described in Table 031.7. Sufficient overhead and underwater lighting shall be maintained to clearly see the bottom of the pool at all times pool is in use. Owners shall provide protective shielding for all lighting fixtures above walking surfaces and pool areas.

Table 031.7*
Minimum Lighting Level Required at Water Recreation Facilities.

Location	Minimum Lighting Level
Indoor pool surface	30 foot candles
Outdoor pool surface*	10 foot candles
Pool Decks	10 foot candles
Locker rooms and mechanical rooms	20 foot candles

* Outdoor pool facilities, which are used in daylight hours only (before dusk) are not required to meet this standard.

(24) **Flow-through pools:** Flow-through pools may qualify for exceptions to recirculation if:

(a) Water supply is sufficient to provide the same turnover period specified for recirculation pools;

(b) The source water supply meets acceptable quality requirements and is subject to a disinfection method as described under WAC 246-260-111(3);

(c) The introduction of fresh treated pool water is accomplished by the same type of inlet and outlet design required for recirculation pools; and

(d) The pool water quality complies with WAC 246-260-111.

[Statutory Authority: RCW 70.90.120. 12-17-102, § 246-260-031, filed 8/17/12, effective 9/17/12; 10-20-131, § 246-260-031, filed 10/5/10, effective 11/5/10; 05-09-004, § 246-260-031, filed 4/7/05, effective 5/8/05. Statutory Authority: Chapters 70.90 and 43.20 RCW. 04-18-096, § 246-260-031, filed 9/1/04, effective 10/31/04.]

WAC 246-260-041 Swimming pool design, construction, and equipment. For more general design, and construction requirements that pertain to all pools, see WAC 246-260-031.

(1) **Location.** Owners shall ensure pump houses, planters, balconies, landscape features, trees, and structures are located fifteen feet or more horizontally away from any swimming pool, or provide barriers or other means to prevent diving or ready access to a pool from the structures. These structures do not include:

(a) Building walkways above the second story;

(b) Inaccessible roofs eight feet or more in height; or

(c) Any barriers provided to prevent unauthorized pool access (e.g., fencing).

(2) **Walking deck surfaces.** Owners shall design and maintain walking deck surfaces as follows:

(a) For pools less than fifteen hundred square feet, walking deck surfaces must be at least four feet wide around the entire perimeter of pools;

(b) For pools less than fifteen hundred square feet, walking deck surfaces must be at least:

(i) Six feet wide at the shallow end of a variable-depth pool; and

(ii) Six feet wide on a minimum of twenty-five percent of the deck space of free form pools.

(c) For pools fifteen hundred square feet or larger, walking deck surfaces must be at least six feet wide:

(i) Around the entire perimeter of outdoor pools;

(ii) On fifty percent of the perimeter of indoor pools; and

(iii) The remaining fifty percent perimeter of the indoor pool must be a minimum of four feet wide.

(d) For pools fifteen hundred square feet or more, walking deck surfaces must be at least sixteen square feet per bather. To determine maximum bather load see subsection (10) of this section. If the owner provides maximum facility occupancy loading less than that of subsection (10) of this section, and the occupancy limit is posted and enforced, that loading may be used in lieu of the maximum bather load figure as described under subsection (10) of this section; and

(e) General use pools may not have sand and grass areas within the pool enclosure unless these areas are separated to prevent direct access from the pool area and the facility provides a means for cleansing bather's feet before reentering the pool and deck area.

(3) **Pool general floor and wall dimensional design.**

(a) Owners shall ensure pool dimensional designs for floors and walls provide for safety, circulation and quality of water;

(b) Pool floors must have uniform slopes with:

(i) A maximum slope of a one-foot drop in twelve feet of run at pool depths to five or less in pools fifteen hundred square feet or more; and

(ii) Floor slopes not intruding into the area designated as the diving envelope.

(c) Pool sidewalls may not curve or intrude into the pool beyond the vertical more than twelve inches at three and one-half feet and eighteen inches at a depth of five feet. The radius of curvature of wall-floor junctions may not exceed the maximum radius designated in Table 041.1 of this section for depths over five feet. Vertical means walls not greater than eleven degrees from plumb:

Table 041.1

Maximum Radius Coving or Pool Intrusion Dimensions Between Pool Floor and Wall*

POOL DEPTH	3'	3'6"	5'	Greater than 5'
MINIMUM SIDEWALL DEPTH (Springline)	2'2"	2'6"	3'6"	At 3'6"
MAXIMUM RADIUS OF CURVATURE	10"	12"	1'6"	**Maximum radius equals pool depth minus the vertical wall depth

*Note: For pool depths falling between the depths listed, values can be interpolated.
For pool depths less than three feet and greater than five feet, values shall be extrapolated.
Radius of coving shall not intrude into pool within diving envelope.

(d) Pool configuration must have a transitional radius from wall to floor where floor slopes join walls so that:

(i) The center of the radius not less than the minimum vertical depth specified under Table 041.1 of this section below the water surface level;

(ii) The arc of the radius is tangent to the wall; and

(iii) The maximum radius of coving, or any intrusion into the pool wall/floor interface, is determined by subtracting the vertical wall depth from the total pool depth.

(4) **Ledges.** In new construction or alterations to existing construction, ledges are prohibited in swimming pool sidewalls, except as specified in WAC 246-260-091(3).

(5) **Specific design requirements for pools furnishing areas for diving.** Owners shall ensure areas designated for diving activities include a diving envelope meeting minimum requirements in:

(a) D-8.01, Table 1, APHA Public Pool Regulations, 1981, if the pool user would enter from the deck level twelve inches or less from water surface level.

(b) CNCA standard configuration in areas where user would enter from the deck level over twelve inches from water level, or has a platform or diving board provided at a height of less than one-half meter (twenty inches). This requirement is based on a standard described under CNCA publication *Swimming Pools: A Guide to Their Planning, Design, and Operation* 1987, Fourth Edition. Human Kinetics Publisher, Inc., Champaign, Illinois, Figure 8.1; or

(c) Dimensions for Diving Facilities, FINA facility rules, 2000-2001, if the pool user enters from the diving board or platform at a height of twenty inches (one-half meter) or greater from water surface level.

(6) **Pool appurtenances.**

(a) If a swimming pool contains diving boards and/or diving platforms, owners shall ensure that the boards and platforms:

(i) Are installed according to manufacturer's instructions;

(ii) Have slip-resistant tread surfaces;

(iii) Have steps and ladders leading to diving boards with handrails; and

(iv) Are protected with guardrails and one intermediate rail, both extending at least to the water edge when one meter or more above the water.

(b) Owners shall ensure starting blocks:

(i) Are firmly secured when in use; and

(ii) If water depth is less than nine feet, starting blocks must be removed or covered with protective equipment unless used by competitive swimmers trained in proper use of starting blocks.

(c) Owners shall ensure that water slides conform with requirements of chapter 246-262 WAC.

(7) **Turnover.** Owners of swimming pools shall design and maintain water treatment recirculation rates to completely turn over the entire pool water volume of pool in six hours or less.

(8) **Pool depth markings.** Owners shall provide water depth markings in feet:

(a) Located on the pool vertical wall at or above the water level so as to be easily readable from the water, in numbers at least two inches high. If overflow channels do not allow for placement of vertical wall markings above the water level, they are not required;

(b) Located on the horizontal surface of pool coping or deck of pools within eighteen inches of the water's edge, easily readable while standing on the deck facing the water, in numbers at least four inches high;

(c) Placed at the maximum and minimum water depths and at all points of slope change;

(d) Spaced at increments of water depth of two feet or less;

(e) Spaced along sides of pools at horizontal intervals of twenty-five feet or less;

(f) Arranged uniformly on both sides and ends of pool;

(g) Placed on all major deviations in shape;

(h) Applied in a contrasting color; and

(i) Made of slip-resistant material on decks.

(9) **Safety line or marking line.**

(a) Owners shall provide either safety float lines or marking lines separating areas where the pool bottom breaks from a uniform slope in the shallow area leading to deeper water. Neither float lines or marking lines are required in pools with uniform floor slopes not exceeding one foot of slope for every twelve feet of horizontal floor length.

(b) Safety float lines, when used, must:

(i) Be kept in place at all times, except when the pool is used for a specific purpose such as lap swimming or competitive use;

(ii) Be placed one foot toward the shallow end away from the break point line;

(iii) Be strung tightly allowing bathers to hold onto the line for support;

(iv) Provide floats on the line at a minimum distance of every four feet; and

(v) Have a receptacle for receiving the safety line either recessed into the wall or constructed so as not to constitute a safety hazard when the safety line is removed.

(c) Marking lines, when used, must:

(i) Be placed on pool sides and bottoms at the break point line; and

(ii) Be of a contrasting color to the background color of the pool sidewalls and floor.

(d) In pools with uniform slopes not exceeding one foot of drop in twelve feet of run from the shallow end to the deep end, a safety float line or marking line is not required.

(10) **Bather load.** Owners shall ensure maximum number of bathers in the pool facility at any one time do not exceed a number determined by the formula noted under Table 041.2.

Table 041.2

Swimming Pool Maximum Bathing Load*

Type of pool	Value **A** (**SF Shallow (5 ft. or less))	Value **B** (SF Deep (> 5 ft.))	Maximum bather load Value **A** + **B**
Indoor	SF/25	SF/30	
Outdoor	SF/15	SF/30	

* This formula will be used in determining certain features of pools as noted elsewhere in these rules and regulations.

** SF means square feet of surface area.

(11) **Emergency equipment.** Owners shall provide first aid and have emergency equipment readily available at swimming pool facilities during operating hours, including:

(a) A telephone within the facility for general use pools;

(b) A telephone accessible within one minute for limited use pool facilities;

(c) A suitable area to accommodate persons requiring first-aid treatment;

(d) A standard 16-unit first-aid kit (see Appendix C, Table); and

(e) A blanket reserved for emergency use.

(f) For facilities with lifeguards:

(i) A rescue tube or rescue buoy at each pool lifeguard station; and

(ii) A backboard with means to secure a victim to a board and immobilize head, neck, and back.

(g) For pool facilities without lifeguards:

(i) A reaching pole at least twelve feet long with a double crook life hook;

(ii) A reaching pole at least twelve feet long for every fifteen hundred square feet of pool surface area; and

(iii) A throwing buoy, throw-rope bag, or other similar device with a rope the width of the pool or fifty feet long, whichever is less, for reaching and retrieving a victim.

(h) No later than June 1, 2008, owners of existing pools with single main drains shall install emergency equipment to shut off all pumps hooked to the recirculation lines for the pools. This emergency equipment must be placed within twenty feet of the pool and marked with an emergency shutoff sign. The shutoff switch must include an audible alarm

which can be heard by those in the area, or have an alarm that goes to a point where staff is always present during the periods the pool is open.

(i) Pools providing dual main drains meeting the requirements of this section, or other acceptable methods of providing equivalent protection to the emergency shutoff switch, are exempt from this requirement.

(ii) The owner shall check the shutoff switch at least twice annually to determine it is properly operating.

(iii) The department will develop a guidance document to aid owners and designers in potential options to the emergency shutoff switch and audible alarm.

(12) **Foot baths.** Foot baths at water recreation facilities are prohibited. This does not preclude the construction and use of foot showers, if the area is well drained.

[Statutory Authority: RCW 70.90.120. 05-09-004, § 246-260-041, filed 4/7/05, effective 5/8/05. Statutory Authority: Chapters 70.90 and 43.20 RCW. 04-18-096, § 246-260-041, filed 9/1/04, effective 10/31/04.]

WAC 246-260-051 Spa pool design, construction, and equipment. For more general design, and construction requirements that pertain to all pools see WAC 246-260-031.

(1) **Walking surfaces.** Owners shall design and maintain walking surfaces four feet or more wide around fifty percent or more of each spa pool. If spa pools are greater than one hundred square feet in surface area, then the entire perimeter must have a four-foot wide walking surface. If a spa has walking surfaces thirty inches or more in height above the floor, then they must have guardrails that conform with UBC codes.

(2) **Spa pool structure.** Owners shall ensure spa pool facilities have:

(a) White or light color surfaces, if a pool is one hundred square feet or more;

(b) Uniform floor slopes not exceeding one foot of drop in twelve feet of run sloped to drain;

(c) A minimum height of seven feet between the top of the pool rim and the ceiling;

(d) A maximum operational depth of four feet measured from the water line, except for special purpose designed pools; and

(e) Heater thermostat switches inaccessible to bathers.

(3) **Spa capacity.** The spa capacity is the maximum number of persons allowed in the spa pool at any one time and is the most restrictive of the following:

(a) The number of bathers able to be in the spa pool allowing ten square feet or more of water surface for each bather;

(b) Maximum bather load as calculated using the formula in subsection (4) of this section; or

(c) The capacity of the overflow system when using skimmers must be adequate to handle twenty gallons of displacement per bather.

(4) **Turnover rate and bather load.** Owners shall design and maintain water turnover of spa pool volume divided by turnover time divided by a constant (K). Spa turnover times are established in relation to loads as follows:

(a) Ten minutes for heavily loaded;

(b) Twenty minutes for moderately loaded;

(c) Thirty minutes for lightly loaded; and

(d) Sixty minutes for swim spas having very light loads.

Factors for Determination of Spa Loading

Spa Volume	Turnover Time (options are 10, 20, 30, or *60 minutes)	Constant K_{10} (10 minute turnover time) 8 gpm/person	Constant K_{20+} (20, 30, or *60 minute turnover time) 6.67 gpm/person
Value A	Value B	Value K_{10}	K_{20+}

* 60 minute turnover times are established for swim spa facilities.

$$\frac{\text{(Value A)}}{\text{(Value B)}} \div \text{(Constant K*)} = \text{Maximum spa capacity}$$

* Choose K based on turnover of the spa.

(5) **Emergency equipment.** Owners shall provide easily accessible first-aid and emergency equipment at all spa pool facilities during operating hours, including:

(a) A telephone within the facility for general use spa;

(b) A telephone within one-minute access for limited use spa pools;

(c) A standard sixteen-unit first-aid kit;

(d) A blanket reserved for emergency use; and

(e) A clearly marked emergency shutoff switch for turning off all pumps. The switch must be within twenty feet of each spa, accessible to the public, and triggering an audible alarm.

[Statutory Authority: Chapters 70.90 and 43.20 RCW. 04-18-096, § 246-260-051, filed 9/1/04, effective 10/31/04.]

WAC 246-260-061 Special design and construction provisions for hotels and motels (transient accommodations) serving fewer than fifteen living units and for spas in individual hotel/motel rooms. (1) Owners are exempt from the requirements for design, construction, and equipment in WAC 246-260-031 and 246-260-051 for spa pools at limited use facilities serving less than fifteen living units, except for requirements listed in this section. Owners shall also ensure that chemicals are stored in a manner to minimize safety risks.

(2) The requirements in WAC 246-260-031 (1), (2), (3), (4), (5), (6), (8)(a) and (b), (d)(iii) and (v), (e) and (f), (9), (10), (15), (16), (17), and Table 031.6 apply to prefabricated spa pools at limited use facilities serving less than fifteen living units.

(3) The requirements in WAC 246-260-051 (2)(b), (d), (e), (4), (5)(b), (c), and (e) apply to prefabricated spa pools at limited use facilities serving less than fifteen living units.

(4) Spa pools that are drained, cleaned and refilled between patron use in individual hotel/motel rooms are exempt from these requirements. Spas that are not drained, cleaned and refilled between use shall at least:

(a) Conform with WAC 246-260-031(4) on barriers beyond the room itself, such that the guest room plus any associated lanai or deck may be considered an enclosure unit.

(b) Conform with WAC 246-260-031(17) on disinfection equipment and conform with water quality requirements of WAC 246-260-111 for disinfection and pH.

[Statutory Authority: RCW 70.90.120. 10-20-131, § 246-260-061, filed 10/5/10, effective 11/5/10; 05-09-004, § 246-260-061, filed 4/7/05, effective 5/8/05. Statutory Authority: Chapters 70.90 and 43.20 RCW. 04-18-096, § 246-260-061, filed 9/1/04, effective 10/31/04.]

WAC 246-260-071 Wading pool design, construction, and equipment. For more general design and construction requirements that pertain to all pools, see WAC 246-260-031.

(1) **Walking surfaces.** Owners shall design and maintain pool walking surfaces:

(a) Four feet or more wide; and

(b) With a surface area of sixteen square feet per bather at the facility with both a swimming pool and wading pool when swimming pool is fifteen hundred square feet or more.

(2) **Wading pool floor and wall dimensional design.** Owners shall ensure pool dimensional designs for floors and walls provide for bather safety and do not hinder water circulation and quality. Designs must include:

(a) Coved at the intersection of walls with floors; and

(b) Uniform pool floor slopes not exceeding one foot of drop in twelve feet of run.

(3) **Wading pool entry and exit.** Owners shall provide one or more means of entry and exit on all pools including one of the following:

(a) Stairs including:

(i) Nonslip tread finish;

(ii) Contrasting color stair tread edges;

(iii) Handrails having leading edges less than eighteen inches beyond and less than eight inches inside (horizontally) the vertical plane of the bottom riser;

(iv) Riser treads with a minimum unobstructed, horizontal, ten-inch tread depth and minimum two hundred forty square inches of surface area; or

(v) Riser height uniform and seven and one-half inches or less, except last step leading into pool may be less than uniform height;

(b) Shallow pool entry must be seven and one-half inches or less in depth;

(c) Ramp entry into the pool must meet the following construction requirements:

(i) A handrail extending over the deck edge and extending to the bottom of the ramp for entering and leaving the wading pool;

(ii) Ramp edges protruding into the pool of contrasting color; and

(iii) Ramp slope not to exceed one foot in twelve feet.

(4) **Turnover.** Owners shall ensure wading pools turn over the entire pool water volume in three hours or less. If wading pools are recirculated jointly with swimming pools, proper means to ensure efficient turnover and treatment of the wading pool must be maintained.

(5) **Pool depth markings.** Owners shall provide easily visible depth markings:

(a) Measured in feet or inches;

(b) Located on the coping or deck within eighteen inches of the water's edge and positioned to be readable while standing on the deck facing the water;

(c) Made of slip resistant material;

(d) Placed at the maximum and minimum water depths;

(e) Spaced at intervals not exceeding twenty-five feet;

(f) Uniformly arranged on both sides and ends of the pool; and

(g) In numbers a minimum of four inches high.

(6) **Bather load.** Owners shall provide each bather in a wading pool facility with seven square feet or more of water surface area at all times.

(7) **Emergency equipment.** No later than June 1, 2008, owners of existing pools with single main drains shall install emergency equipment to shut off all pumps hooked to the recirculation lines for the pools. This emergency equipment must be placed within twenty feet of the pool and marked with an emergency shutoff sign. The shutoff switch must include an audible alarm which can be heard by those in the area, or the switch must have an alarm that goes to a point where staff is always present during the periods the pool is open.

(a) Pools with dual main drains meeting the requirements of this section, or other acceptable methods of providing equivalent protection to the emergency shutoff switch, are exempt from this requirement.

(b) The owner shall check the shutoff switch at least twice annually to determine it is properly operating.

(c) The department will develop a guidance document to aid owners and designers in potential options to the emergency shutoff switch and audible alarm.

[Statutory Authority: Chapters 70.90 and 43.20 RCW. 04-18-096, § 246-260-071, filed 9/1/04, effective 10/31/04.]

WAC 246-260-081 Spray pool design, construction, and equipment. For more general design and construction requirements that pertain to all pools, see WAC 246-260-031.

(1) **Walking surface.** A minimum four-foot wide walking surface shall extend around the perimeter of a spray feature sufficient that the spray will not exceed the walkway area in normal conditions including light wind conditions.

(2) **Pool structure.** Owners shall ensure each spray pool has:

(a) Pool surfaces with nonslip finishes impervious to water;

(b) Uniform pool floor slopes not exceeding one foot of a slope for every twelve feet of horizontal floor length;

(c) A source of water for the spray feature from an approved potable water supply;

(d) Water drained to waste disposed in a manner approved by local authorities or the department after use in the spray pool, unless it is recirculated with approved treatment as described in WAC 246-260-031; and

(e) The entire volume of water circulated through an approved treatment system every thirty minutes or less if water is recirculated.

(3) **Inlets.** Owners shall ensure spray nozzles at each spray pool are designed and maintained to not inflict physical damage to bathers. Design and construction shall include evaluation of forces of the spray nozzle including velocity,

pressure and total force in proximity to bathers' eyes and other body orifices.

(4) **Outlets.**

(a) Owners shall ensure outlet drains are designed and maintained to provide sufficient capacity to prohibit water accumulation in each spray pool.

(b) Piping must be designed so velocity in piping assuming one hundred percent of the pump recirculation flow does not exceed six fps between the pump and the outlet drain.

(c) Each spray pool must have two or more outlet drains that:

(i) Are located at the low point of the pool;

(ii) Are located at least three feet apart, measured between the centers of the drain covers; and

(iii) Are manifolded with junction fittings placed in the middle of branch line piping between outlet drains, so that the length of branch line piping is equal on each side of the junction fitting, see Figure 081.1;

Figure 081.1
Outlet Drain Branch Line Piping Detail

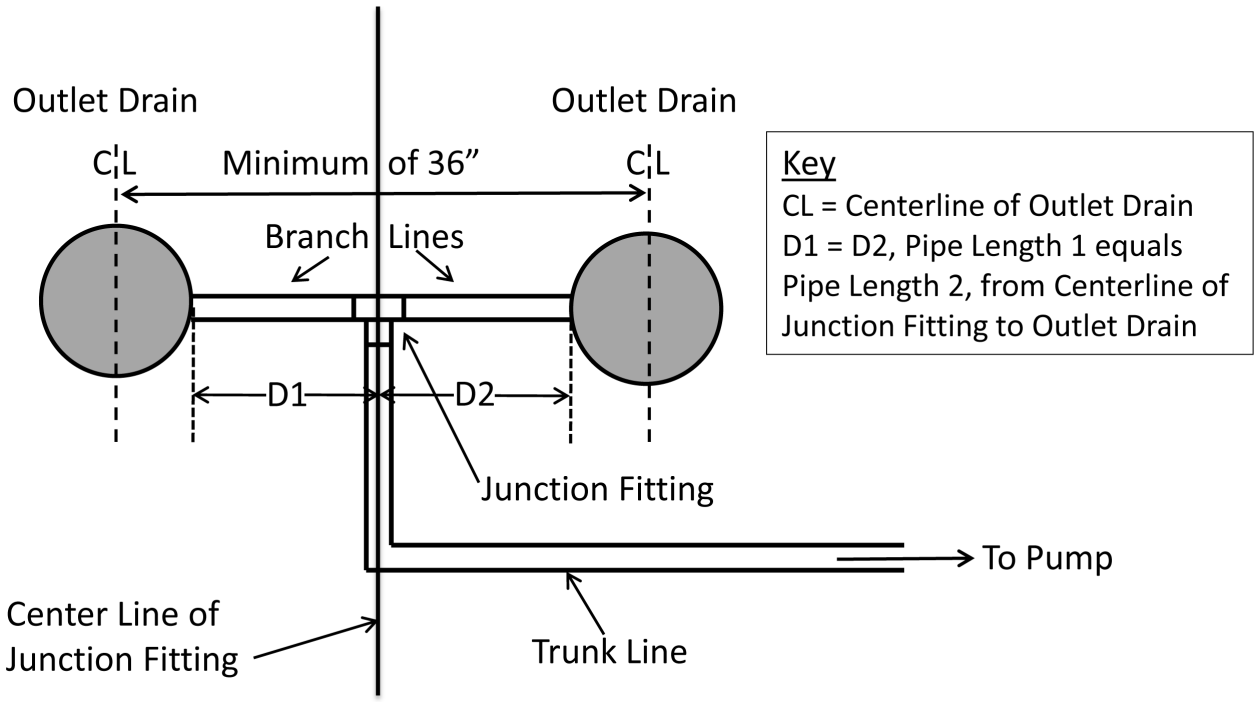

(iv) Have drain covers removable only with specific tools.

(d) Multiple outlet drains must be designed so that if one outlet drain becomes blocked, the remaining outlet drains are rated to at least one hundred percent of the maximum pump flow; see Table 081.1.

Table 081.1
Outlet Drain Flow Rating Requirements

	Number of Outlet Drains per Recirculation System			
	2	**3**	**4**	**5**
Outlet drain rated flow capacity must be at least equal to the percent of maximum pump flow indicated, depending on the number of outlet drains.	100%	50%	33.3%	25%

(e) Outlet drains that are accessible to pool users and submerged must:

(i) Conform to the suction fitting standard; and

(ii) Have a maximum flow of one and one-half feet per second through the cover.

(f) Outlet drains that are accessible to pool users and not submerged must have:

(i) Openings that prevent the passage of a sphere over one-half inch in diameter; and

(ii) Drain covers that withstand forces of users.

(5) **Emergency equipment.** No later than June 1, 2008, owners of existing pools with single main drains shall install emergency equipment to shut off all pumps hooked to the recirculation lines for the pools. This emergency equipment must be placed within twenty feet of the pool and marked with an emergency shutoff sign. The shutoff switch must include an audible alarm which can be heard by those in the area, or the switch must have an alarm that goes to a point where staff is always present during the periods the pool is open.

(a) Pools that include dual main drains meeting the requirements of this section, or other acceptable methods of providing equivalent protection to the emergency shutoff switch, are exempt from this requirement.

(b) The owner shall check the shutoff switch at least twice annually to determine it is properly operating.

(c) The department will develop a guidance document to aid owners and designers in potential options to the emergency shutoff switch and audible alarm.

[Statutory Authority: RCW 70.90.120. 12-17-102, § 246-260-081, filed 8/17/12, effective 9/17/12; 10-20-131, § 246-260-081, filed 10/5/10, effective 11/5/10. Statutory Authority: Chapters 70.90 and 43.20 RCW. 04-18-096, § 246-260-081, filed 9/1/04, effective 10/31/04.]

WAC 246-260-091 Specialty design features. (1) Owners providing special features shall ensure the features meet the requirements of this section.

(2) **Benches.** A single bench or seat that is recessed from the general wall of the swimming pool may be built into the shallow area of the pool, if it meets the following conditions. The bench: (See figure 091.1.)

(a) May not be located in an area that is used for lap swimming;

(b) May not exceed twenty percent of the length of the side it is located on or five percent of the perimeter of a free form pool;

(c) Must have a minimum two-inch or wider durable continuous line of a contrasting color on the top and side of the bench edge, so as to be readily visible to persons standing on the deck and persons swimming in the water; and

(d) The area of the deck above the bench must be labeled in nonslip lettering at least four inches high: "NO DIVING."

figure 091.1

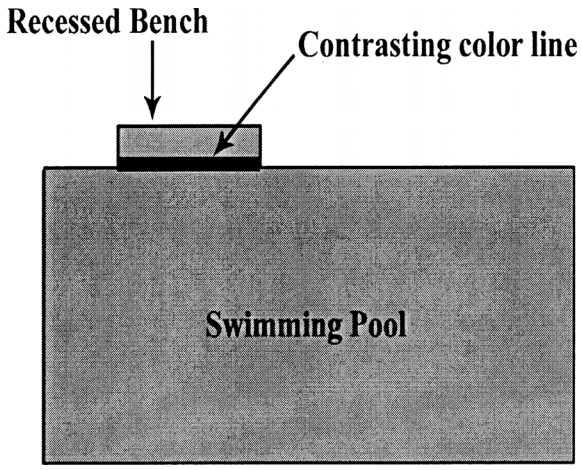

(3) **Ledges.** In general use swimming pools, a single ledge may be built into the deep end of the pool, if:

(a) The ledge construction conforms with FINA facilities rules, 2001-2002, Swimming Pools, FR2.4.2;

(b) The ledge is in a contrasting color from the rest of the pool for easy visibility.

(4) **Waterfalls.** A waterfall feature may be built at swim pool or spa pool facilities if the following conditions are met:

(a) If located in or adjacent to shallow swimming pool water levels, it must be set back from the edge of the pool a distance specified in Table 091.2; exceptions may be made for lifeguarded pools;

(b) If located at, or adjacent to, deep swimming pool water levels, it will be considered a diving platform and the adjacent pool area must conform to diving envelope design specified in WAC 246-260-041(5);

(c) Minimum walkway areas required in other sections of this chapter must be maintained around pools;

(d) Water in waterfalls that commingles with pool water must meet water quality and treatment requirements specified in other sections of this chapter and any additional disinfection required by the department or local health officer to address anticipated increased demands and aerosolization of disinfectant;

(e) Flows may not create turbulence that might create a safety hazard or reduce visibility in the pool; and

(f) Waterfalls that flow from pool sidewalls may not exceed five percent of the total pool perimeter.

Table 091.2
Set-Back Requirements for Special Water Features in Pools at Shallow Swimming Pool Water Levels*

Height of Feature Above Pool Water Level	Type of Special Feature		
	Waterfall	Rockery	Planting
12 inches or less	Feature may spill directly to pool from sidewall	Setback of 4 feet or more from pool edge; except at pools that are continuously lifeguarded. Five percent of deck perimeter may have feature provided up to pool edge.	Setback of 4 feet or more from pool edge.
Greater than 12 inches and less than 30 inches	Setback of 8 feet or more from pool edge.		
Greater than or equal to 30 inches	Setback of 15 feet or more from pool edge.		

* Guarded pool setbacks shall be established in a preconstruction design conference with the owner, designer and health department.

(5) **Rockeries.** A decorative rock feature may be built at a swim pool or spa pool facility, if the following conditions are met:

(a) If located adjacent to shallow swimming pool water, it must be set back from the edge of the pool a distance specified in Table 091.2; exceptions may be made for lifeguarded pools;

(b) If located at or adjacent to deep swimming pool water levels, it will be considered a diving platform and the adjacent pool area must conform to diving envelope design specified in WAC 246-260-041(5);

(c) The design has a nonslip surface without sharp or cutting edges in any areas that provide a potential foothold, stepping or standing access; and

(d) It slopes to drain water away from the pool.

(6) **Play toy equipment.** Play toy equipment may be built at pool facilities provided the following conditions are met:

(a) Can only be used in lifeguarded pools;

(b) It must comply with the requirements of chapter 246-262 WAC;

(c) Its design conforms to ASTM standard F1292 including establishing fall zones;

(d) Surfaces must be easily cleanable;

(e) It must be operated in accordance with a written plan of operation developed by the owner, addressing placement of the toy, protection from falls, entrapment, entanglement of bathers from each other, and visibility of users to lifeguards; and

(7) **Special use pools.** At least thirty days prior to development of final plans and specifications, owners shall submit proposals at a preliminary design conference for pools designed for special use purposes (e.g., scuba training, kayaking, portable rental spas, sensory deprivation tanks, public promotions at sports fields, county fairs, and any special events using portable pools) to the department or local health officer for review and approval. The department or local health officer has flexibility in applying portions of this chapter or additional requirements necessary to assure health and safety for users of these special use pools.

(8) **Ballet rails.**

(a) Owners may install ballet-type rails on pools having uses limited to exercise and training;

(b) Owners may install ballet-type rail on general or limited use pools, if:

(i) The rail is inset into the wall to preclude any obstructions in the pool; and

(ii) The rail is removable and covers are provided and used to maintain a flush surface in general use pools.

[Statutory Authority: RCW 70.90.120. 05-09-004, § 246-260-091, filed 4/7/05, effective 5/8/05. Statutory Authority: Chapters 70.90 and 43.20 RCW. 04-18-096, § 246-260-091, filed 9/1/04, effective 10/31/04.]

POOL OPERATION REQUIREMENTS

WAC 246-260-101 Operating permit. (1) A person may not operate a WRF without a current operating permit, issued by the department or local health officer.

(2) To obtain an operating permit, owners of a WRF shall provide the department or local health officer information showing the WRF is in compliance with this chapter.

(3) Operating permits are:

(a) Valid for one year;

(b) Subject to annual renewal; and

(c) Nontransferable without written department or local health officer consent. For purposes of this section, a change in management of a corporation, partnership, association, or other nonindividual business entity creates a new person requiring either consent for a permit transfer or issuance of a new permit upon proper application.

(4) The department or local health officer issuing the operating permit may revoke or suspend the permit if the WRF is not operating in accordance with chapter 70.90 RCW or chapter 246-260 WAC.

[Statutory Authority: Chapters 70.90 and 43.20 RCW. 04-18-096, § 246-260-101, filed 9/1/04, effective 10/31/04.]

WAC 246-260-111 Water quality standards, analysis, and sample collection. (1) **Contamination.** Owners shall maintain water free from harmful levels of disease producing organisms, toxic chemicals, or adverse physical conditions.

(2) **Bacteriological standards.** Owners shall maintain WRF pool waters to meet the following standards of bacteriological quality:

(a) Heterotrophic plate counts may not exceed two hundred bacteria per milliliter in two consecutive tests;

(b) Total coliform may not exceed an average of one coliform per sample of one hundred milliliters in two consecutive tests when using the membrane filter test; and

(c) Total coliform may not exceed 2.2 bacteria per sample of one hundred milliliters of water in two consecutive samples when using the most probable number (MPN) method.

(3) **Disinfection.**

(a) Owners shall maintain continuous disinfection of WRF pool water at all times by using:

(i) Chlorine or bromine concentrations specified in Table 111.1 of Appendix A;

(ii) Ozone may be used as a supplement to primary disinfection, but not a replacement.

(A) Minimum levels of primary disinfectant (chlorine or bromine) may not be less than required minimums.

(B) Ozonator units must meet the requirements of NSF standard 50 and be listed by NSF or an equivalent laboratory testing to NSF standard 50 and providing readily available listing.

(C) Maximum levels of ozone that can be produced by ozone generating device in the atmosphere above the pool water or the room where ozone is generated may not exceed 0.05 ppm.

(iii) Copper or copper silver disinfection processes may be used as a supplement to primary disinfection, but not a replacement.

(A) Minimum levels of primary disinfectant (chlorine or bromine) may not be less than required minimums.

(B) Copper or copper/silver disinfection units must meet requirements of NSF standard 50 and be listed by NSF or an equivalent laboratory testing to NSF standard 50 and providing readily available listing.

(C) Maximum levels of copper that can be produced in the pool water are 1.0 ppm copper and 0.05 ppm of silver; or

(iv) An alternative disinfectant registered with EPA and WSDA.

(b) Any primary or supplemental alternative disinfectant shall be used in conformance with guidelines established by the department and NSF standard 50.

(c) Alternative disinfectants must be evaluated using EPA document "*Guide Standard and Protocol for Testing Microbiological Water Purifiers*" by Campt and Cotruvo, EPA, April, 1986.

(4) **Chemical and physical quality.**

(a) Owners shall maintain physical and chemical conditions in WRF pool water within the ranges specified under Table 111.2 of Appendix A;

(b) Owners shall maintain cleanliness of WRF pool water by:

(i) Closing an affected WRF pool when contaminated with feces, blood, vomit, sewage, or other hazardous or unknown material until the area is clean, disinfected, and free of the hazardous material;

(ii) Daily removal of scum or floating material on the pool water surface;

(iii) Continuous removal of scum or floating material by overflow action of pool water with flotsam screened and filtered; and

(iv) Maintaining sanitary walking surfaces.

(5) **Laboratory sampling and testing.** Water samples for laboratory analyses required by this chapter must be:

(a) Analyzed in accordance with the twentieth edition of standard methods for the examination of water and waste/water analysis, published jointly by the American Public Health Association/Water Pollution Control Federation and AWWA;

(b) Collected in bottles approved by the local health officer;

(c) Collected and transported by procedures specified in standard methods listed in (a) of this subsection; and

(d) Analyzed at a laboratory approved by the local health officer.

(6) **Field testing.** Owners shall have and use field-testing equipment:

(a) To measure disinfectant residuals, pH, alkalinity, cyanuric acid (when used in pool) and any other chemicals routinely used in the pool water;

(b) To detect chlorine gas at pools where compressed chlorine gas is used, using commercial strength ammonia vapor; and

(c) With accuracy in the ranges of measurements specified in Table 111.3 of Appendix A.

(7) **Chemicals in pool.** Owners shall ensure addition of chemicals or materials to WRF pool waters occurs only when the use is accepted by the department or local health officer.

(8) **Additional tests.** Owners shall perform any additional tests of WRF pool water or air required by the department or local health officer to assure public safety.

[Statutory Authority: Chapters 70.90 and 43.20 RCW. 04-18-096, § 246-260-111, filed 9/1/04, effective 10/31/04.]

WAC 246-260-121 Monitoring, reporting, and recordkeeping. (1) **Reporting death, injury, and illness.** Owners shall:

(a) Provide the department or local health officer with information requested regarding the investigation of an injury or illness associated with the WRF; and

(b) Notify the department or local health officer of a drowning, near drowning, death, serious injury or serious illness associated with the WRF within forty-eight hours after becoming aware of the occurrence.

(2) **Incidents.** Owners shall provide the department or local health officer with any information requested regarding the investigation of an incident creating a potential health or safety problem, for example, a chlorine gas leak.

(3) **Monitoring and recordkeeping.**

(a) Owners shall monitor the following water quality conditions of WRF pools and maintain records for a minimum of three years:

(i) Residual disinfectant concentration level frequently enough, but at least once every twenty-four hours, to determine that the residual is satisfactorily sustained to meet the requirements of WAC 246-260-111(3);

(ii) Hydrogen ion (pH) concentration frequently enough, but at least once every twenty-four hours, to determine that the level is maintained in a range of 7.2 to 8.0;

(iii) Alkalinity at least weekly;

(iv) If pool water temperature is over ninety-five degrees Fahrenheit, water temperature frequently enough, but at least once every twenty-four hours, to determine temperature does not exceed one hundred four degrees Fahrenheit; and

(v) If cyanuric acid or one of its derivatives is used in a pool, cyanurate level testing at least weekly and maintained at levels established in Table 111.2.

(b) Owners shall keep records for three years of:

(i) Quantities of all chemicals added to pool water each day;

(ii) Treatment system flow rates, measured at least daily; and

(iii) Any incidents of visible pool water contamination, for example, from vomit, feces, or blood.

(4) **Availability.** Owners shall make records required by this section available for department or local health officer review upon request.

[Statutory Authority: Chapters 70.90 and 43.20 RCW. 04-18-096, § 246-260-121, filed 9/1/04, effective 10/31/04.]

WAC 246-260-131 Operation of water recreation facilities. (1) **Operation plan.** Owners shall ensure proper operation to protect the public health, safety, and water quality by establishing standard practices and developing a written operations manual addressing each of the following:

(a) Physical pool facility components and signage;

(b) Personnel;

(c) Users and spectators, including pool rules;

(d) Emergency response provisions;

(e) Diving during supervised swimming instruction into water depths recognized as adequate by the organization certifying the activity, such as ARC; and

(f) Environmental conditions.

(2) **Physical components.** Owners shall check each WRF's physical components routinely to ensure:

(a) Barrier protection, emergency equipment and structural facilities are properly maintained.

(b) Water does not pond on walking surfaces;

(c) Common articles provided for patrons, such as towels, bathing suits, bathing caps, etc., are sanitized before reuse;

(d) Sanitation items including toilet tissue, handwashing soap and single use towels or equivalent are maintained at facilities;

(e) Treatment of the water recreation pool facility occurs continuously at turnover rates required by this chapter twenty-four hours a day during periods of use;

(f) Swimming, spa, wading and spray pools shall be equipped with drain covers that are properly maintained, intact and secured to protect against entrapment.

(g) Extra filter cartridge provided for each cartridge filter.

(3) **Food service.** If food service is provided and allowed, the owner shall:

(a) Ensure food and beverage sale and consumption areas at general use pools are separated from pool and deck enclosure areas;

(b) Prohibit food and beverage in pool water at limited use pools and maintain a minimum four-foot clear area between pool edge and any tables and chairs provided for food service;

(c) Prohibit use of glass in pool facility and provide trash containers; and

(d) Prohibit the sale or consumption of alcohol at general use pools.

(4) **Spa and recirculating spray pool reservoir cleaning.** Owners shall routinely drain, clean and refill spa and recirculation spray pools at a minimum frequency specified by the following formula.

Spa or spray pool reservoir volume in gallons/3/average number of users per day = Number of days between draining, cleaning and refilling.

(5) **Signage for user rules.**

(a) Owners shall provide and maintain signage specifying user rules and safety information required by this section in a conspicuous place in the pool area with easily readable lettering at least three-eighths of an inch high. All swimming, spa and wading pool facilities must have signs stating pool rules:

(i) Prohibiting use by anyone running or participating in horseplay:

(ii) Prohibiting use by anyone under the influence of alcohol or drugs;

(iii) Prohibiting use by anyone with a communicable disease or anyone who has been ill with vomiting or diarrhea within the last two weeks;

(iv) Prohibiting anyone from bringing food or drink into the pool water;

(v) Requiring everyone to have a cleansing shower before entering the pool;

(vi) Requiring anyone in diapers to wear protective covering to prevent contamination;

(vii) Requiring diapers to be changed at designated diaper change areas;

(viii) Warning patrons that anyone refusing to obey the pool rules is subject to removal from the premises;

(ix) Directing patrons to the location of the nearest telephone and first-aid kit for emergency use;

(x) Advising patrons that anyone with seizure, heart, or circulatory problems should swim with a buddy; and

(xi) Where diving boards are used, provide signs for proper use.

(b) All swimming, spa, and wading pool facilities where lifeguards or attendants are not present shall have signs stating additional pool rules that:

(i) If a child twelve years of age or less is using the pool, a responsible adult eighteen years of age or older must accompany the child and be at the pool or pool deck at all times the child uses the facility; and

(ii) If an individual between thirteen years of age and seventeen years of age is using the pool, at least one other person must be at the pool facility.

(c) All spa pool facilities must have signs stating additional pool rules:

(i) Cautioning that children under the age of six should not use a spa pool;

(ii) Cautioning that persons suffering from heart disease, diabetes, or high blood pressure should consult a physician before using a spa pool;

(iii) Cautioning that women who are or might be pregnant seek physician's advice regarding using a spa pool;

(iv) Cautioning everyone to limit the stay in the spa pool to fifteen minutes at any one session; and

(v) Posting the maximum bather capacity of each spa pool.

(d) All spray pool facilities must have signs stating pool rules as specified in (a)(i), (ii), (iii), (iv), (v), (vi), and (viii) of this subsection.

(6) **Required personnel.**

(a) Owners shall ensure appropriate personnel specified in this subsection provide monitoring at pool facilities.

(b) General use swimming pool facilities shall have lifeguards present at all times pools are in use; except:

(i) If swim or dive teams are facility users, the owner may allow substitution of a qualified coach properly credentialed by the sponsoring organization furnishing the swim or dive coach; and

(ii) Owners may substitute persons with Master Scuba Diver Trainer or Master Scuba Diver Instructor certification through PADI or SCUBA instructor, assistant instructor or divemaster through NAUI or other department-approved training in lieu of lifeguards for SCUBA training.

(iii) PADI or NAUI certified scuba instructing staff shall maintain the following conditions:

(A) Limit number of persons training to ten persons per instructor.

(B) Ensure all persons being instructed are monitored at all times while in the pool to ensure thirty-second response time can be provided.

(iv) Private club swimming pool facilities must have lifeguards present at all times persons sixteen years of age and younger are using the pool facilities, except:

(A) Attendants or shallow water lifeguards may supervise persons thirteen through sixteen years of age when these users are restricted to a pool depth less than or equal to five feet; and

(B) Attendants or shallow water lifeguards may supervise all persons sixteen years of age and under if the entire pool depth is less than four and one-half feet.

(c) If a spa or wading pool is in same enclosure as a swimming pool, all pools are subject to the most stringent monitoring personnel requirements applicable for any pool in the enclosure unless barriers that conform to WAC 246-260-031(4) restrict access between pools.

(d) The use of spas or wading pools not requiring lifeguards or attendants is subject to the following conditions:

(i) If the pool is used by children twelve years of age or under, a responsible adult eighteen years of age or older must accompany the children and be at the pool or pool deck at all times the children use the facility;

(ii) If the pool is used by persons seventeen years of age or under, a minimum of two people must be at the pool facility at all times the pool is in use;

(iii) The owner shall post the requirements of this subsection to assure the responsible person is notified of conditions for use of the facility.

(e) Limited use pool facilities must have an equivalent or greater level of supervision as specified for private clubs in (b)(iv) of this subsection during any times when activities are provided that put the pools into the category of general use pools.

(f) At limited use pool facilities, if alcohol is sold within the pool facility, the owner must provide a lifeguard or attendant at the pool area.

(g) All pool facilities must have a water treatment operator.

(7) **Personnel duties and equipment.**

(a) Owners shall ensure personnel are present at each WRF who perform duties specified in this subsection.

(b) Lifeguards, shallow water lifeguards and swim coaches shall guard assigned pool users and provide a rescue response time of thirty seconds or less.

(c) Attendants, if provided at pools not requiring lifeguards, shall oversee pool use by the bathers and provide supervision and elementary rescues such as reaching assists to bathers in need. This does not mean the person is qualified or trained to make swimming rescues.

(d) Owners shall notify responsible persons on the conditions for facility use at pools not requiring lifeguards and for which no lifeguards or attendants are present. A responsible person means a person having responsibility for overseeing users seventeen years of age or under including, but not limited to, a person:

(i) Renting an apartment, hotel, motel, RV camp, etc.; or

(ii) Who is an owner or member of a condominium, homeowner's association, fraternity, equity ownership facility, mobile home park, sorority, or private club with a pool facility.

(e) Water treatment operators shall assure the water treatment components of each WRF are functioning to protect health, safety and water quality.

(f) Owners shall ensure that lifeguards, shallow water lifeguards, swim coaches, and attendants:

(i) Wear a distinguishing suit/uniform, or emblem; and

(ii) Carry a whistle or equivalent signaling device.

(8) **Personnel training.**

(a) Owners shall ensure that pool personnel required by subsection (6) of this section have skills necessary for their duties, obtained by training and certification specified in Table 131.1 in Appendix B, or equivalent.

(b) Owners shall keep a copy at the WRF of each currently valid certification required for pool personnel.

(c) Owners shall ensure safety-monitoring personnel obtain continuing education needed to maintain lifeguarding skills and maintain valid certifications required by this subsection.

(d) If SCUBA or kayaking lessons are conducted at a pool, owners shall ensure that personnel monitoring these activities are trained to recognize special hazards associated with these activities.

(9) **Emergency response plan.**

(a) Owners shall prepare and implement emergency response plans specified in this subsection.

(b) In pool facilities where lifeguards, shallow water lifeguards, or swimming coaches are required by subsections (6) and (7) of this section:

(i) Sufficient qualified personnel must be present and appropriately located to provide a rescue response time of thirty seconds or less for all pool users;

(ii) The number and qualifications of personnel present must be based on factors dealing with pool depth, line of sight, bather load, potential emergency procedures, and personnel rotation;

(iii) Emergency response drills must be held two or more times each year to test whether thirty-second response time can be met; and

(iv) A record of each response drill must be kept at the WRF for three or more years.

(c) In pool facilities where lifeguards are not present, in accordance with subsection (6)(c) and (e) of this section, owners shall adopt rules, provide enforcement of conditions for pool use and notify users when first using facility and at least annually thereafter that conditions for use include:

(i) If a child twelve years of age or less is using the pool, a responsible adult eighteen years of age or older shall accompany the child and be at the pool or pool deck at all times the child uses the facility; and

(ii) If anyone seventeen years of age or less is using the pool, a minimum of two people shall be at the pool facility.

(d) Emergency equipment specified in WAC 246-260-041, 246-260-051, and 246-260-071 must be readily available during WRF operating hours.

(e) In facilities where chlorine gas is used:

(i) WRF personnel shall conduct annual emergency drills; and

(ii) The plan shall identify the location of accessible chlorine cylinder repair kits.

(f) Operators shall ensure that lifeguards, shallow water lifeguards, and swim coaches receive ongoing training of emergency response skills.

(10) **Environmental conditions.** Owners shall monitor various environmental conditions affecting the facility or potentially affecting the health and safety of users. Owners shall close the WRF or take other appropriate action in response to adverse environmental factors, (e.g., electrical storms, fog, wind, and visibility problems) to ensure that the health and safety of users are protected.

(11) **Closure.** Owners shall close the facility when the facility presents an unhealthful, unsafe, or unsanitary condition. These conditions include lack of compliance with the

water quality or an operation requirement in this section or in WAC 246-260-111.

[Statutory Authority: RCW 70.90.120. 05-09-004, § 246-260-131, filed 4/7/05, effective 5/8/05. Statutory Authority: Chapters 70.90 and 43.20 RCW. 04-18-096, § 246-260-131, filed 9/1/04, effective 10/31/04.]

WAC 246-260-141 Water recreation facility pools not in operation. (1) Owners of pool facilities that are not in operation shall prevent access to the facility by means of locked barriers.

(2) If a pool enclosure area has one pool open and another closed (e.g., seasonal pool, year-round spa), the owner shall ensure that the pool that is closed:

(a) Is posted with signage stating that the pool is closed; and

(b) Meets water clarity standards as outlined in Table 111.2 in WAC 246-260-111; or

(c) Is covered with a safety cover meeting ASTM standard F1346-91 and not allowing access to the pool.

(d) Does not create a nuisance or disease hazard.

(3) All pool covers must be completely removed during periods when the pool is open for use.

(4) If a pool that is closed develops an ice layer, the owner must install a safety cover meeting ASTM standard F1346-91 or the entire pool enclosure area must be closed.

(5) If a pool facility is not in operation for more than twelve months, the owner shall provide a safety cover over the pool meeting ASTM standard F1346-91 or the owner shall back fill the pool.

[Statutory Authority: Chapters 70.90 and 43.20 RCW. 04-18-096, § 246-260-141, filed 9/1/04, effective 10/31/04.]

WAC 246-260-151 Restrictions on animals. Owners shall prevent animal access to the WRF pool, except service animals in the deck area accompanying users or spectators requiring them. A service animal is defined in RCW 70.84.021 and means an animal that is trained for the purposes of assisting or accommodating a disabled person's sensory, mental, or physical disability.

[Statutory Authority: Chapters 70.90 and 43.20 RCW. 04-18-096, § 246-260-151, filed 9/1/04, effective 10/31/04.]

ADMINISTRATIVE RULES

WAC 246-260-171 Compliance. (1) Except as provided in subsections (2), (4), and (5) of this section, existing water recreation facilities with approved plans prior to October 31, 2004, that do not fully comply with the design, construction, and equipment requirements in WAC 246-260-031, 246-260-041, 246-260-051, 246-260-061, 246-260-071, and 246-260-081 may be continued in use.

(2) Owners of all facilities shall comply with the operational requirements in WAC 246-260-101 through 246-260-151.

(3) Owners of facilities designed and constructed after the effective date of these regulations shall comply with all applicable sections of the design, construction and equipment requirements in WAC 246-260-021 through 246-260-091.

(4) Facilities constructed prior to the effective date of these regulations shall comply with the barrier protection requirements in WAC 246-260-031 (4) and (5) and the emergency equipment requirements established in WAC 246-260-041 (11)(h); 246-260-071(7); and 246-260-081(4) by the compliance deadlines specified in the regulations. Barrier modifications or emergency shutoff switches made prior to the compliance deadlines shall meet the requirements in WAC 246-260-031 (4) and (5); and WAC 246-260-041 (11)(h); 246-260-071(7); and 246-260-081(4) at the time the modifications are made.

(5) When owners are modifying the physical plant of their facilities, they are required to upgrade the area of the physical plant being modified to conform to current requirements. For example, when owners having pool facilities with single main drains are changing or modifying their main drains they shall modify the main drains in compliance with the current requirements. This includes, but is not limited to:

(a) Resurfacing of pools that involves alteration of the drains; or

(b) Changes to the main drain outlet sump or its recirculation piping.

[Statutory Authority: RCW 70.90.120. 05-09-004, § 246-260-171, filed 4/7/05, effective 5/8/05. Statutory Authority: Chapters 70.90 and 43.20 RCW. 04-18-096, § 246-260-171, filed 9/1/04, effective 10/31/04.]

WAC 246-260-180 Bathing beaches. No bathing beach shall be maintained or operated when such water is determined by the health officer to be so polluted or subject to pollution as to constitute a menace to health if used for bathing. Where bathhouse and toilet facilities are provided for use of bathers they shall be constructed, maintained and operated in a sanitary manner approved by the health officer.

[Statutory Authority: RCW 43.20.050. 91-02-051 (Order 124B), recodified as § 246-260-180, filed 12/27/90, effective 1/31/91; Regulation .98.070, effective 3/11/60.]

WAC 246-260-181 Surveillance. Owners and operators shall allow the department and local health officer to perform on-site WRF inspections or conduct other surveillance activities considered necessary by the enforcing agency to ensure compliance with this chapter and chapter 70.90 RCW.

[Statutory Authority: Chapters 70.90 and 43.20 RCW. 04-18-096, § 246-260-181, filed 9/1/04, effective 10/31/04.]

WAC 246-260-191 Technical advisory committee. (1) The department shall appoint a technical advisory committee to assist in the following:

(a) Reviewing and drafting proposed rules; and

(b) Developing guidelines for use of new products, equipment, procedures, and periodic program review.

(2) The department may determine the need for and frequency of technical advisory committee meetings.

(3) The WRF technical advisory committee membership shall include representation from the following:

(a) General use pool facility owners;

(b) Limited use pool facility owners;

(c) NSPI;

(d) WRPA;

(e) Engineer or architect design consultants;

(f) Eastern and Western Washington local environmental health jurisdictions;

(g) The department; and

(h) Recreational water contact facility owners (as appropriate).

(4) The technical advisory committee may appoint subcommittees, as the committee determines appropriate to address specific issues.

(5) The department shall maintain minutes of meetings.

[Statutory Authority: Chapters 70.90 and 43.20 RCW. 04-18-096, § 246-260-191, filed 9/1/04, effective 10/31/04.]

WAC 246-260-201 Variance. (1) An owner (or their authorized representative) may apply to the department or local health officer for a variance to the requirements of this chapter for a water recreation facility. If the application relates to construction permits, it must be made at least thirty days prior to development of final plans and specifications. If the application relates to issuance of an operation permit, the owner shall present their proposal for a variance with the department or local health officer at least thirty days before any consideration of implementing an operation change. An application may not be approved unless, notwithstanding a noncompliant design or construction or noncompliant operation, the health and safety purposes behind requirements of this chapter are met. An applicant shall provide adequate documentation to meet these requirements including, but not limited to:

(a) The variance is consistent with the intent of this chapter;

(b) Protection from drowning, diving injury, entrapment, impact or falling hazards, tripping or slipping hazards;

(c) Maintenance of water and air quality, including equivalent disinfection, filtration, control of pH, physical water conditions, water clarity and prevention of contamination to preclude illness;

(d) Upon receipt of a complete application, the department or local health officer shall provide a written approval or denial of the variance.

(2) The department and each local health officer shall provide the board a written summary of variances granted the previous year. This summary shall be submitted by January 31 of the following year or any time the board requests.

(3) The board may, at its discretion, require variance requests be submitted to it for review and approval.

[Statutory Authority: Chapters 70.90 and 43.20 RCW. 04-18-096, § 246-260-201, filed 9/1/04, effective 10/31/04.]

WAC 246-260-211 Enforcement. (1) The department or local health officer may enforce this chapter by one or more of the following actions:

(a) Conducting an informal administrative conference to explore facts and resolve problems, convened at the request of the department, local health officer, or owner;

(b) Issuing an order directing the WRF owner, operator, or the person responsible to cease violating this chapter or chapter 70.90 RCW;

(c) Requiring the WRF owner or authorized representative to participate in training to improve basic skills for operating pools;

(d) Assessing a civil penalty of up to five hundred dollars per violation per day; and

(e) Denying, suspending, or revoking a WRF construction or operating permits.

(2) Orders authorized under this section may include, but are not limited to, requirements to:

(a) Take corrective measures, which may include a schedule; necessary to gain compliance with this chapter and chapter 70.90 RCW; and

(b) Stop work or refrain from using a WRF or any portion of a WRF and approvals required by statute or rules are obtained.

(3) An order issued under this section shall:

(a) Be in writing;

(b) Name the facility and the person or persons to whom the order is directed;

(c) Briefly describe each action or inaction constituting a violation of this chapter or chapter 70.90 RCW;

(d) Specify any required corrective action, if applicable;

(e) Provide notice, as appropriate, that continued or repeated violation may subject the violator to the penalties specified in subsection (4) of this section.

(4) Continued or repeated violation of the provisions of this chapter or chapter 70.90 RCW may subject the violator to:

(a) Civil penalties of up to five hundred dollars;

(b) Denial, suspension or revocation of the facility's construction or operating permit; or

(c) Referral to the county prosecutor or attorney general's office.

(5) The department or local health officer may deny an application or reapplication for a WRF operating permit and may revoke or suspend a WRF operating permit of any person who:

(a) Previously had an operating permit suspended or revoked or had an operating permit application denied for reason;

(b) Failed or refused to comply with any provisions of this chapter, chapter 70.90 RCW, or any other statutory provision or rule regulating the WRF construction or operation; or

(c) Obtained or attempted to obtain an operating permit or any other required certificate of approval applicable to the WRF by fraudulent means or misrepresentation.

(6) The department or local health officer may summarily suspend a WRF operating permit, without a prior hearing, if the department or local health officer finds that the WRF presents an imminent hazard to public health or safety and incorporates a finding to that effect in an order.

[Statutory Authority: Chapters 70.90 and 43.20 RCW. 04-18-096, § 246-260-211, filed 9/1/04, effective 10/31/04.]

WAC 246-260-221 Hearings. A person aggrieved by the department's or local health officer's denial, suspension, or revocation of a WRF permit; issuance of an order or levy of a civil penalty may request an administrative hearing.

A hearing requested to contest a local health officer's action is governed by the local health jurisdiction's rules for hearings.

A hearing requested to contest a department action is governed by chapters 246-10 WAC and 34.05 RCW.

[Statutory Authority: Chapters 70.90 and 43.20 RCW. 04-18-096, § 246-260-221, filed 9/1/04, effective 10/31/04.]

WAC 246-260-9901 Fees. (1) CONSTRUCTION PERMIT FEES. The department establishes the fees listed in Table 990.1 for construction permits for carrying out its duties under WAC 246-260-021.

(a) The applicant must submit the base fee to the department prior to plan review initiation.

(b) Hourly charges for plan review will be charged regardless of whether the construction permit is issued or not.

(c) The department will issue the construction permit once full payment has been received.

(d) The applicant must pay the costs of a safety engineer to review plans when department determines need per WAC 246-260-021(4).

TABLE 990.1
CONSTRUCTION PERMIT FEES

	TYPE OF FACILITY	CONSTRUCTION PERMIT PLAN REVIEW FEES
I.	Swimming Pools 100,000 gallons or more in volume	$ 800.00 plus $ 99/hr. for all hours of review time greater than 8 hours
II.	Swimming Pools less than 100,000 gallons, Spa Pools, and Recirculating Spray Pools	$ 400.00 plus $ 99/hr. for all hours of review time greater than 4 hours
III.	Wading Pools and Nonrecirculating Spray Pools	$ 200.00 plus $ 99/hr. for all hours of review time greater than 2 hours
IV.	Alterations, renovations, or modifications to existing swimming, spa, wading or spray pools $ 100.00 plus $ 99/hr. for all hours of review time greater than 1 hour.	

(2) OPERATING PERMIT FEES The department establishes the fees listed in Table 990.2 for operating permits for carrying out its duties under WAC 246-260-101.

TABLE 990.2

FEE SCHEDULE
OPERATING PERMITS
Type + Number of Facilities

	Single Swim Pool	Single Spa Pool	Single Wading Pool	Spray Pool or Pools	Each Additional Swim, Spa, or Wading Pool
Operating Permit 0-6 month	$ 291.00	$ 255.00	$ 211.00	$ 105.00	$ 63.00
Operating Permit 6-12 months	$ 477.00	$ 424.00	$ 371.00	$ 159.00	$ 84.00

(3) Other Terms and Conditions:

(a) The department may charge an additional fee of $87 plus associated laboratory costs for any inspections beyond those provided under the annual operating permit when necessary due to violations of such items as (a) noncompliance with water quality standards, and (b) failure to comply with operational requirements for health and safety.

(b) The department may charge an alternate annual fee for an operating permit based on direct and indirect costs associated with issuance of the permit when arrangements are made with local health jurisdictions to administer all or portions of the duties associated with the operating permit. Except, that the fee for this operating permit cannot exceed the cost established by the previous portions of this regulation, but the fee may be less.

(c) During the first year of development of the operating permit and for new pool facilities built hereafter, or pools temporarily closed (significant period of several months) and reopened, there are provisions for prorating the costs for the operating permits.

(d) A reduction in fees, up to but not exceeding thirty percent, may be granted by the department when a facility operator can demonstrate a satisfactory level of training in pool safety, water quality, maintenance and operations. The department will develop criteria for these fee reductions within six months of the adoption of this regulation.

(e) For limited use facilities requiring operating permits which are serving less than fifteen living units, the operating permit shall be fifty percent of the fee. However, the department may charge a reinspection fee if necessary under (a) of other terms and conditions.

(f) Fees for multiple facilities at the same physical location shall have a maximum FEE CAP as follows: Seasonal (0-6 months) WRF's: $774 NOTE: The third and subsequent pool/spa at the same location will be charged $51 for each additional pool/spa.
Year around (>6 months) WRF's $1032 NOTE: The third and subsequent pool/spa at the same physical location will be charged $67 for each additional pool/spa.

(4) Examples of Fees Charged:

(a) If more than one pool at a facility and one is a year-round pool and another is a seasonal pool—year-round pool is base cost, seasonal pool is charged at additional fee charge. For example: Year-round spa = $424 plus seasonal swimming pool is $63 = $487 total operating permits.

(b) If a single swimming pool and a single spa pool is used at the facility, the fee schedule will include fees as noted. For a 0-6 month permit, the primary fee for the single swimming would be $291 and the spa pool would be viewed as the second pool at the facility and would have a fee of $63, total operating permit fees would be $354.

(c) If there are 12 pools/spas at a single year-around pool facility, the FEE CAP would apply and the maximum fee of $1032 would be charged. ($477 base fee, $84 for first additional pool/spa, $67 for the remaining ten year-around pools/spas (10 x $67 = $670)) Total fee before fee cap = $477 + $84 + $670 = $1231. After FEE CAP the total fee = $1032. If approved training were credited to this facility for the maximum 30% discount, the 30% would be applied to the FEE CAP fee of $1032; $1032 - 30% = $723.

[Statutory Authority: RCW 70.90.150. 06-16-120, § 246-260-9901, filed 8/1/06, effective 9/1/06. Statutory Authority: RCW 70.90.150 and 43.20B.-250. 03-14-146, § 246-260-9901, filed 7/2/03, effective 8/2/03. Statutory Authority: RCW 43.70.250, 70.90.150, and 43.20B.250. 01-14-047, § 246-260-9901, filed 6/29/01, effective 7/30/01. Statutory Authority: RCW 70.90.150 and 43.20B.020. 94-11-056, § 246-260-9901, filed 5/11/94, effective 6/11/94.]

WAC 246-260-998 Severability. If any provision of this chapter or its application to any person or circumstances is held invalid, the remainder of this chapter or the application of the provision to other persons or circumstances shall not be affected.

[Statutory Authority: RCW 43.20.050. 91-02-051 (Order 124B), recodified as § 246-260-998, filed 12/27/90, effective 1/31/91. Statutory Authority: RCW 70.90.120. 90-07-010 (Order 042), § 248-98-998, filed 3/12/90, effective 4/12/90.]

WAC 246-260-999 Appendix A—Water quality standards.

Table 111.1
Minimum and Maximum Levels of Disinfectant (ppm)*

SWIMMING POOL: ***	Minimum
Chlorine	1.5
Chlorine with cyanurate compound	2.0
Bromine	2.5

SPA & WADING POOL: ***	Minimum
Chlorine	3.0
Chlorine with cyanurate compound	3.5
Bromine	4.0

* Chlorine is measured as free available chlorine residual.
** Recirculating spray pools and sensory deprivation tanks shall meet spa and wading pool levels.
*** The maximum disinfectant level shall conform with manufacturers' recommendations and shall not exceed 10 ppm for any pool.

Table 111.2
Acceptable Ranges of Selected Chemical and Physical Water Quality Constituents

CHEMICAL OR PHYSICAL CONSTITUENT	MINIMUM	MAXIMUM
pH (Hydrogen ion)	7.2	8.0
Water clarity (safety)	Main drain and pool bottom visible at all times	-
Turbidity (shielding microorganisms T.U.)*	-	0.5
Cyanuric acid or its derivatives	0	90 ppm
Temperature**	-	104°F
Combined chlorine	-	50% of free chlorine
Ozone***	-	.05
Ionizers (Copper/Silver)	-	1.0/.05

* In peak periods, turbidity may increase to 1.0 T.U. provided turbidity returns to 0.5 T.U. within a six-hour period following peak use. Turbidity is not a required routine analysis. The local health officer may require turbidity monitoring if special conditions warrant.
** A pool facility thermometer shall be provided when the water temperature exceeds 95 degrees Fahrenheit.
*** Atmospheric measurement.

Table 111.3
Required Ranges of Accuracy and Incremental Readings for Field Test Kits

CHEMICAL TEST	MINIMUM TEST KIT RANGE	MINIMUM REQUIRED INCREMENTS ON KITS	MINIMUM ACCURACY
Free and total available chlorine and total bromine	0.5 - 10.0 ppm*	These increments are required to be on the test kit: 0.5, 1.0, 1.5, 2.0, 3, 5, 6, 10 ppm	±50% of the difference of incremental readings
pH (hydrogen ion)	7.0 - 8.2	Maximum increments of 0.4, e.g., 7.0, 7.4, 7.8, 8.2, Preferred increments of 0.2, e.g., 7.0, 7.2…. 8.0, 8.2	±50% of the difference of incremental readings
Cyanuric acid	20 - 100 ppm	20 ppm	±10
Alkalinity	0 - 300 ppm	20 ppm	±10
Temperature	60 - 110°F	Shall have increments of less than or equal to 2°F, e.g., 60, 62, 64 … 108, 110	±2°F

* Operators who demonstrate the ability to accurately perform test kit dilutions may be allowed to use test kits with a chlorine range of 1.5 - 5.0 ppm, thereby using dilutions to read up to 10 ppm.

[Statutory Authority: Chapters 70.90 and 43.20 RCW. 04-18-096, § 246-260-999, filed 9/1/04, effective 10/31/04.]

WAC 246-260-99901 Appendix B—Personnel training and certifications.

Table 131.1
Personnel Training and Certifications

PERSONNEL	TRAINING RECOGNIZED	CERTIFYING AGENCIES*
Lifeguards	Lifeguarding, CPR, and First Aid.	ARC, YMCA, Lifesaving Society, E&A, ALTI, Starguard
Shallow Water Lifeguards	Shallow Water Lifeguard or Bronze Cross Award, CPR, and First Aid.	E&A, Lifesaving Society
SCUBA Instruction	Master SCUBA Diver Trainer or Master SCUBA Diver Instructor (PADI). SCUBA Instructor, Assistant Instructor, or Divemaster (NAUI).	PADI, NAUI
Swim Coaches	Swim Coaches Safety Training, CPR and First Aid.	ARC, YMCA
Dive Coaches	Safety Training for Competitive Diving Coaches Option A or Safety Training for Competitive Diving Coaches Renewal Option A; and CPR & First Aid.	U.S. Diving
Attendants	Aquatic Safety Assistant or Basic Water Rescue or Water Safety Plus and CPR.	YMCA, ARC, E&A

* The department determines equivalent certifying organizations providing training.

[Statutory Authority: Chapters 70.90 and 43.20 RCW. 04-18-096, § 246-260-99901, filed 9/1/04, effective 10/31/04.]

WAC 246-260-99902 Appendix C—First-aid kits for pool facilities.

First-Aid Kits for Pool Facilities
Standard 16 Unit Kit

	Units
Absorbent gauze 24"X72" (1 per package)	1
Adhesive bandages 1" (16 per package)	1
Bandage compresses 4" (1 per package)	2
Eye dressing (1 per package)	1
Scissors and tweezers	1
Triangular bandages 40" (1 per package)	2
Individualized antiseptic pads (3 per package)	1
Surgical gloves (2 pr. minimum, 4 recommended)	1
CPR mask (disposable or reusable type)	1
Adhesive gauze or elastic or self-adherent wrap roll material	1
Cold packs	1
First-aid cream or antibiotic ointment	1
1/2" or 1" rolls of tape (2 rolls per package)	1
Butterfly bandage	1
Knuckle or finger tip bandages	1
Body clean up parts	1
Additional units of required units	1

[Statutory Authority: Chapters 70.90 and 43.20 RCW. 04-18-096, § 246-260-99902, filed 9/1/04, effective 10/31/04.]