Chapter 296-155 WAC
SAFETY STANDARDS FOR CONSTRUCTION WORK

WAC

PART A

GENERAL SAFETY AND HEALTH PROVISIONS

296-155-001 Foreword.
296-155-003 Subsections, subdivisions, items, subitems, and segments.
296-155-005 Purpose and scope.
296-155-006 Equipment approval by nonstate agency or organization.
296-155-007 Incorporation of standards of national organization.
296-155-008 Incorporation of standards of federal agency.
296-155-009 Equipment whether or not owned by, or under control of the employer.
296-155-010 Variance and procedure.
296-155-012 Definitions applicable to all sections of this chapter.
296-155-015 Education and first-aid standards.
296-155-020 Housekeeping.
296-155-030 Acceptable certifications.
296-155-035 General requirements.
296-155-040 Safe place standards.

PART B-1

OCCUPATIONAL HEALTH AND ENVIRONMENTAL CONTROL

296-155-100 Management's responsibility.
296-155-105 Employee's responsibility.
296-155-110 Accident prevention program.
296-155-115 Safety bulletin board.
296-155-120 First-aid training and certification.
296-155-125 First-aid supplies.
296-155-130 First-aid station.
296-155-140 Sanitation.
296-155-145 Occupational noise exposure.
296-155-150 Ionizing radiation.
296-155-155 Nonionizing radiation.
296-155-160 Gases, vapors, fumes, dusts, and mists.
296-155-165 Lighting and illumination.
296-155-170 Ventilation.
296-155-173 Methylenedianiline.
296-155-17301 Scope and application.
296-155-17303 Definitions.
296-155-17305 Permissible exposure limits.
296-155-17307 Communication among employers.
296-155-17309 Emergency situations.
296-155-17311 Exposure monitoring.
296-155-17313 Regulated areas.
296-155-17315 Methods of compliance.
296-155-17317 Respiratory protection.
296-155-17319 Protective work clothing and equipment.
296-155-17321 Hygiene facilities and practices.
296-155-17323 Communication of hazards.
296-155-17325 Housekeeping.
296-155-17327 Medical surveillance.
296-155-17329 Medical removal.
296-155-17331 Recordkeeping.
296-155-17333 Observation of monitoring.
296-155-17337 Appendices.
296-155-17339 Startup dates.
296-155-17341 Appendix A to WAC 296-155-173—Substance data sheet, for 4-4'-methylenedianiline.
296-155-17343 Appendix B to WAC 296-155-173—Substance technical guidelines, MDA.
296-155-17345 Appendix C to WAC 296-155-173—Medical surveillance guidelines for MDA.
296-155-17347 Appendix D to WAC 296-155-173—Sampling and analytical methods for MDA monitoring and measurement procedures.
296-155-174 Cadmium.
296-155-176 Lead.
296-155-17603 Scope.
296-155-17605 Definitions.
296-155-17607 Permissible exposure limit.
296-155-17609 Exposure assessment.
296-155-17611 Methods of compliance.
296-155-17613 Respiratory protection.
296-155-17615 Protective work clothing and equipment.
296-155-17617 Housekeeping.
296-155-17619 Hygiene facilities and practices.
296-155-17621 Medical surveillance.
296-155-17623 Medical removal protection.
296-155-17625 Communication of hazards.
296-155-17627 Signs.
296-155-17629 Recordkeeping.
296-155-17631 Observation of monitoring.
296-155-17650 Appendix A to WAC 296-155-176—Substance data sheet for occupational exposure to lead.
296-155-17652 Appendix B to WAC 296-155-176—Employee standard summary.
296-155-17654 Appendix C to WAC 296-155-176—Medical surveillance guidelines.

PART B-2

HAZARD COMMUNICATION

296-155-180 Hazard communication.

PART C

PERSONAL PROTECTIVE AND LIFE SAVING EQUIPMENT

296-155-200 General requirements for personal protective equipment (PPE).
296-155-201 Definitions applicable to this chapter.
296-155-203 Confined spaces.
296-155-20301 Definitions.
296-155-20307 Confined space work on sewer systems under construction.
296-155-205 Head protection.
296-155-210 Hearing protection.
296-155-211 Leg protection.
296-155-212 Foot protection.
296-155-215 Eye and face protection.
296-155-220 Respiratory protection.
296-155-235 Working over or adjacent to water.
296-155-240 Sterilization of protective equipment.

PART C-1

FALL PROTECTION REQUIREMENTS FOR CONSTRUCTION

296-155-24601 Scope and application.
296-155-24603 Definitions.
296-155-24605 General requirements.
296-155-24607 Fall protection required regardless of height.
296-155-24609 Fall protection required at four feet or more.
296-155-24611 Fall protection required at ten feet or more.
296-155-24613 Fall arrest specifications.
296-155-24615 Fall restraint specifications.
296-155-24617 Positioning device system specifications.
296-155-24619 Other specifications.
296-155-24621 Training.
296-155-24623 Appendix A—Determining roof widths—Nonmandatory guidelines for complying with WAC 296-155-24615.
296-155-24624 Appendix B—Calculating fall clearance distance using a shock-absorbing lanyard and D-ring anchorage connector—Nonmandatory guidelines for complying with WAC 296-155-24613 (1)(d).

PART D

FIRE PROTECTION AND PREVENTION

296-155-250 Definitions applicable to this part.
296-155-260 Fire protection.
296-155-265 Fire prevention.
296-155-270 Flammable liquids.
296-155-275 Liquefied petroleum gas (LP-gas).
296-155-280 Temporary heating devices.

PART E

SIGNALING AND FLAGGERS

296-155-305 Signaling and flaggers.
296-155-310 Barricades.
296-155-315 Definitions applicable to this part.

PART F

STORAGE, USE, AND DISPOSAL

296-155-325 General requirements for storage.
296-155-335 Disposal of waste materials.

PART F-1

RIGGING REQUIREMENTS FOR MATERIAL HANDLING

296-155-336 Rigging requirements for material handling.
296-155-33600 Scope.
296-155-33605 Definitions.
296-155-337 Rigging—General requirements.
296-155-33700 Rigger qualifications.
296-155-33705 General requirements.
296-155-338 Slings.
296-155-33800 Chain slings.
296-155-33805 Wire rope slings.
296-155-33810 Metal mesh slings.
296-155-33815 Synthetic rope slings.
296-155-33820 Synthetic webbing slings.
296-155-33825 Synthetic roundslings.
296-155-339 Rigging hardware and lifting devices other than slings and rigging hardware.
296-155-33900 General requirements.
296-155-33905 Shackles.
296-155-33910 Adjustable hardware.
296-155-33915 Compression hardware.
296-155-33920 Links, rings, and swivels.
296-155-33925 Rigging blocks.
296-155-340 Lifting devices other than slings and rigging hardware.
296-155-34005 Structural and mechanical lifters.
296-155-34010 Vacuum lifters.
296-155-34015 Close proximity lifting magnets.
296-155-34020 Remotely operated lifting magnets.
296-155-34025 Scrap and material handling grapples.

PART G

TOOLS—HAND AND POWER

296-155-350 General requirements.
296-155-355 Hand tools.
296-155-360 Power-operated hand tools.
296-155-363 Safety requirements for powder actuated fastening systems, in accordance with ANSI A10.3-1985, Safety Requirements for Powder Actuated Fastening Systems.
296-155-36301 Scope.
296-155-36303 Purpose.
296-155-36305 Definitions applicable to this section.
296-155-36307 Requirements.
296-155-36309 Power loads.
296-155-36311 Fasteners.
296-155-36313 Operation.
296-155-36315 Limitations of use.
296-155-36317 Maintenance and storage.
296-155-36319 Authorized instructor.
296-155-36321 Qualified operator.
296-155-365 Abrasive wheels and tools.
296-155-367 Masonry saws.
296-155-370 Woodworking tools.
296-155-375 Jacks—Lever and ratchet, screw, and hydraulic.
296-155-380 Air receivers.

PART H

WELDING AND CUTTING

296-155-400 Gas welding and cutting.
296-155-405 Arc welding and cutting.
296-155-407 Protective clothing.
296-155-410 Fire prevention.
296-155-415 Ventilation and protection in welding, cutting, and heating.
296-155-420 Welding, cutting, and heating in way of preservative coatings.

PART I

ELECTRICAL

296-155-426 Introduction.
296-155-428 General requirements.
296-155-429 Lockout and tagging of circuits.
296-155-432 Maintenance of equipment.
296-155-434 Environmental deterioration of equipment.
296-155-437 Batteries and battery charging.
296-155-441 Applicability.
296-155-444 General requirements.
296-155-447 Wiring design and protection.
296-155-449 Wiring methods, components, and equipment for general use.
296-155-452 Specific purpose equipment and installations.
296-155-456 Hazardous (classified) locations.
296-155-459 Special systems.
296-155-462 Definitions applicable to this part.

PART J

STAIRWAYS

Note: Requirements relating to portable ladders and fixed ladders have been moved to chapter 296-876 WAC, Ladders, portable and fixed.

296-155-475 Scope and application.
296-155-47501 Definitions applicable to this part.
296-155-476 General requirements.
296-155-477 Stairways.

PART J-1

SCAFFOLDS

Note: Requirements relating to scaffolds have been moved to chapter 296-869 WAC.

PART L

CRANES, RIGGING, AND PERSONNEL LIFTING

296-155-529 Scope and definitions.
296-155-52900 Scope.
296-155-52901 Certification and proof load testing—Requirement.
296-155-52902 Definitions.
296-155-531 Crane certifier accreditation process.
296-155-53100 Accreditation of crane certifiers of cranes and derricks—Requirements.
296-155-53102 Accreditation—Application form and applicant qualifications.
296-155-53104 Issuance of accreditation.
296-155-53106 Accreditation application—Processing time.
296-155-53108 Duration and renewal of an accreditation.
296-155-53110 Revocation or suspension of an accreditation.
296-155-53112 Monitoring of accredited crane certifiers.
296-155-53114 Issuance of temporary and annual certificates of operation.
296-155-532 Crane certification requirements for cranes.
296-155-53200 General inspection criteria, wire rope inspection and removal criteria, and preproof load test requirements for all cranes.
296-155-53202 Additional inspection criteria and proof load testing—Mobile cranes.
296-155-53204 Additional inspection criteria and proof load testing—Articulating boom cranes.
296-155-53206 Additional inspection criteria and proof load testing—Tower cranes.
296-155-53208 Additional inspection criteria and proof load testing—Self-erecting tower cranes.
296-155-53210 Additional inspection criteria and proof load testing—Overhead/bridge and gantry bridge cranes.
296-155-53212 Additional inspection criteria and proof load testing—Derricks.
296-155-53214 Crane decertification and reinstatement.
296-155-533 Qualifications and certification.
296-155-53300 Operator qualifications and certification.
296-155-53302 Signal person qualifications.
296-155-53304 Repair, inspection, and maintenance employee qualifications.
296-155-53306 Rigger qualifications.
296-155-534 General requirements for all cranes and derricks.
296-155-53400 General requirements.
296-155-53401 Duties of assigned personnel.
296-155-53402 Assembly/disassembly.
296-155-53403 Fall protection.
296-155-53404 Wire rope.
296-155-53405 Inspections.

296-155-53406 Signals.
296-155-53408 Power line safety.
296-155-53409 Training.
296-155-53410 Safety devices.
296-155-53412 Operational aids.
296-155-53414 Cranes/derricks with a rated hoisting/lifting capacity of two thousand pounds or less.
296-155-537 Mobile cranes.
296-155-53700 Mobile cranes—General.
296-155-53715 Mobile cranes—Operations.
296-155-538 Articulating boom cranes.
296-155-53800 Articulating boom cranes—General.
296-155-53815 Articulating boom cranes—Operations.
296-155-539 Tower cranes.
296-155-53900 Tower cranes—General.
296-155-53905 Tower cranes—Additional inspection criteria.
296-155-53915 Tower cranes—Operations.
296-155-541 Self-erecting tower cranes.
296-155-54100 Self-erecting tower cranes—General.
296-155-54115 Self-erecting tower cranes—Operations.
296-155-542 Overhead/bridge and gantry cranes.
296-155-54200 Overhead/bridge and gantry cranes—General.
296-155-54215 Overhead/bridge and gantry cranes—Operations.
296-155-543 Derricks.
296-155-54300 Derricks—General.
296-155-54305 Derricks—Construction.
296-155-54320 Derricks—Operations.
296-155-544 Additional requirements for other types of cranes/derricks.
296-155-54400 Floating cranes/derricks and land cranes/derricks on barges.
296-155-54405 Dedicated pile drivers.
296-155-54410 Sideboom cranes.
296-155-547 Personnel lifting platforms (attached and suspended)—Scope.
296-155-548 Design and installation requirements for personnel lifting systems.
296-155-54800 Design of platforms and suspension systems.
296-155-549 Personnel lifting hoisting equipment.
296-155-54900 Crane or derrick requirements for personnel lifting.
296-155-551 Inspections, maintenance and testing.
296-155-55100 Inspections on cranes and personnel platforms.
296-155-55105 Adjustments and repairs on personnel platforms.
296-155-55110 Proof load test platforms and rigging.
296-155-55115 Trial lift.
296-155-552 Employer responsibilities.
296-155-55200 Employer responsibilities for lifting personnel.
296-155-55205 Responsibilities of the personnel lift supervisor.
296-155-55210 Crane or derrick operation requirements for personnel lifting.
296-155-553 Lifting personnel.
296-155-55300 Personnel lifting requirements.
296-155-55305 Lifting personnel near electrical power lines.
296-155-554 Boatswain's chairs.
296-155-55400 Use boatswain's chairs as a last resort.
296-155-55405 Lifting personnel using a boatswain's chair.
296-155-556 Rigging—General requirements.
296-155-55600 General requirements.
296-155-558 Slings.
296-155-55800 Chain slings.
296-155-55805 Wire rope slings.
296-155-55810 Metal mesh slings.
296-155-55815 Synthetic rope slings.
296-155-55820 Synthetic webbing slings.
296-155-55825 Synthetic roundslings.
296-155-561 Rigging hardware.
296-155-56100 General requirements.
296-155-56105 Shackles.
296-155-56110 Adjustable hardware.
296-155-56115 Compression hardware.
296-155-56120 Links, rings, and swivels.
296-155-56125 Rigging blocks.
296-155-562 Lifting devices other than slings and rigging hardware.
296-155-56200 Structural and mechanical lifters.
296-155-56205 Vacuum lifters.
296-155-56210 Close proximity lifting magnets.
296-155-56215 Remotely operated lifting magnets.
296-155-56220 Scrap and material handling grapples.
296-155-564 Appendices.
296-155-56400 Mobile crane hand signal chart.
296-155-56405 Examples of types of cranes.
296-155-56410 Personnel platform lift planning and authorization form.
296-155-56415 Qualifications for operators of below-the-hook lifting devices.
296-155-56420 Operator certification—Written examination—Technical knowledge criteria.
296-155-56425 Sample declaration form for hours of experience.
296-155-56430 Assembly/disassembly—Working under the boom, jib or other components—Sample procedures for minimizing the risk of unintended dangerous boom movement.
296-155-56435 Work area chart.

PART M

MOTOR VEHICLES, MECHANIZED EQUIPMENT, AND MARINE OPERATIONS

296-155-600 Definitions applicable to this part.
296-155-605 Equipment.
296-155-610 Motor vehicles on construction sites.
296-155-615 Material handling equipment.
296-155-620 Pile driving equipment.
296-155-625 Site clearing.
296-155-630 Marine operations and equipment.

PART N

EXCAVATION, TRENCHING, AND SHORING

296-155-650 Scope, application, and definitions applicable to this part.
296-155-655 General protection requirements.
296-155-657 Requirements for protective systems.
296-155-66103 Reserved.
296-155-66105 Reserved.
296-155-66109 Reserved.
296-155-664 Appendices.
296-155-66401 Appendix A—Soil classification.
296-155-66403 Appendix B—Sloping and benching.
296-155-66405 Appendix C—Timber shoring for trenches.
296-155-66407 Appendix D—Aluminum hydraulic shoring for trenches.
296-155-66409 Appendix E—Alternatives to timber shoring.
296-155-66411 Appendix F—Selection of protective systems.

PART O

CONCRETE, CONCRETE FORMS, SHORING, AND MASONRY CONSTRUCTION

296-155-675 Scope, application, and definitions applicable to this part.
296-155-680 General provisions.
296-155-681 Safe walking surfaces on concrete structural members.
296-155-682 Requirements for equipment and tools.
296-155-683 Concrete finishing.
296-155-684 Requirements for cast in place concrete.
296-155-685 Tubular welded frame shoring.
296-155-686 Tube and coupler shoring.
296-155-687 Single post shores.
296-155-688 Vertical slip forms.
296-155-689 Placing and removal of forms.
296-155-690 Appendix to WAC 296-155-684 cast in place concrete.
296-155-691 Precast concrete and tilt-up operations.
296-155-694 Requirements for lift-slab construction operations.
296-155-695 Miscellaneous concrete construction.
296-155-697 Requirements for masonry construction.
296-155-699 Appendix A to Part O—References to Part O of chapter 296-155 WAC.

PART P

STEEL ERECTION

296-155-701 Scope.
296-155-702 Definitions.
296-155-703 Site layout, site-specific erection plan and construction sequence.
296-155-704 Hoisting and rigging.
296-155-706 Structural steel assembly.
296-155-707 Column anchorage.
296-155-708 Beams and columns.
296-155-709 Open web steel joists.
296-155-711 Systems-engineered metal buildings.
296-155-714 Falling object protection.
296-155-716 Fall protection.
296-155-717 Training.

PART Q

UNDERGROUND CONSTRUCTION

296-155-725 Definitions applicable to this part.

296-155-730 Tunnels and shafts.
296-155-735 Caissons.
296-155-740 Cofferdams.
296-155-745 Compressed air.
296-155-74501 Appendix A—Decompression tables.

PART R

MISCELLANEOUS CONSTRUCTION REQUIREMENTS

296-155-755 Roofing, insulating and waterproofing.
296-155-765 Rock crushing, gravel washing, and hot mix plants.
296-155-770 Moving of structures.
296-155-77100 Hoists, elevators, excavators, and conveyors.
296-155-77105 Material hoists, personnel hoists, and elevators.
296-155-77110 Base-mounted drum hoists.
296-155-77115 Overhead hoists.
296-155-77120 Conveyors.
296-155-77125 Aerial cableways.
296-155-77130 Concrete bucket towers.
296-155-77135 Hoisting engines.

PART S

DEMOLITION

296-155-775 Preparatory operations.
296-155-780 Stairs, passageways, and ladders.
296-155-785 Chutes.
296-155-790 Removal of materials through floor openings.
296-155-795 Removal of walls, masonry sections, and chimneys.
296-155-800 Manual removal of floors.
296-155-805 Removal of walls, floors, and material with equipment.
296-155-810 Catch platforms.
296-155-815 Storage.
296-155-820 Removal of steel construction.
296-155-825 Mechanical demolition.
296-155-830 Selective demolition by explosives.

PART U

POWER DISTRIBUTION AND TRANSMISSION LINES

Refer to chapter 296-45 WAC, "Safety standards for electrical workers."

PART V

ROLLOVER PROTECTIVE STRUCTURES AND OVERHEAD PROTECTION

296-155-950 Rollover protective structures (ROPS) for material handling equipment.
296-155-955 Minimum performance criteria for rollover protective structures for designated scrapers, loaders, dozers, graders, and crawler tractors.
296-155-960 Protective frame (ROPS) test procedures and performance requirements for wheel-type agricultural and industrial tractors used in construction.
296-155-965 Overhead protection for operators of agricultural and industrial tractors.

DISPOSITION OF SECTIONS FORMERLY CODIFIED IN THIS CHAPTER

296-155-135 First-aid room. [Order 74-26, § 296-155-135, filed 5/7/74, effective 6/6/74.] Repealed by WSR 00-01-038, filed 12/7/99, effective 2/1/00. Statutory Authority: RCW 49.17.010, [49.17].040 and [49.17].050.

296-155-17335 Effective date. [Statutory Authority: Chapter 49.17 RCW. WSR 93-04-111 (Order 92-15), § 296-155-17335, filed 2/3/93, effective 3/15/93.] Repealed by WSR 99-10-071, filed 5/4/99, effective 9/1/99. Statutory Authority: RCW 49.17.010, [49.17].040 and [49.17].050.

296-155-17349 Appendix E to WAC 296-155-173—Methylenedianiline—Qualitative and quantitative fit testing procedures. [Statutory Authority: Chapter 49.17 RCW. WSR 93-04-111 (Order 92-15), § 296-155-17349, filed 2/3/93, effective 3/15/93.] Repealed by WSR 99-10-071, filed 5/4/99, effective 9/1/99. Statutory Authority: RCW 49.17.010, [49.17].040 and [49.17].050.

296-155-17351 Appendix E-1—Qualitative protocols. [Statutory Authority: Chapter 49.17 RCW. WSR 93-04-111 (Order 92-15), § 296-155-17351, filed 2/3/93, effective 3/15/93.] Repealed by WSR 99-10-071, filed 5/4/99, effective 9/1/99. Statutory Authority: RCW 49.17.010, [49.17].040 and [49.17].050.

296-155-17353 Appendix E-1-a—Isoamyl acetate (banana oil) protocol. [Statutory Authority: Chapter 49.17 RCW. WSR 93-04-111 (Order 92-15), § 296-155-17353, filed 2/3/93, effective 3/15/93.] Repealed by WSR 99-10-071, filed 5/4/99, effective 9/1/99. Statutory Authority: RCW 49.17.010, [49.17].040 and [49.17].050.

296-155-17355 Appendix E-1-b—Saccharin solution aerosol protocol. [Statutory Authority: Chapter 49.17 RCW. WSR 93-04-111 (Order 92-15), § 296-155-17355, filed 2/3/93, effective 3/15/93.] Repealed by WSR 99-10-071, filed 5/4/99, effective 9/1/99. Statutory Authority: RCW 49.17.010, [49.17].040 and [49.17].050.

296-155-17357 Appendix E-1-c—Irritant fume protocol. [Statutory Authority: Chapter 49.17 RCW. WSR 93-04-111 (Order 92-15), § 296-155-17357, filed 2/3/93, effective 3/15/93.] Repealed by WSR 99-10-071, filed 5/4/99, effective 9/1/99. Statutory Authority: RCW 49.17.010, [49.17].040 and [49.17].050.

296-155-17359 Appendix E-2—Quantitative fit test procedures. [Statutory Authority: Chapter 49.17 RCW. WSR 93-04-111 (Order 92-15), § 296-155-17359, filed 2/3/93, effective 3/15/93.] Repealed by WSR 99-10-071, filed 5/4/99, effective 9/1/99. Statutory Authority: RCW 49.17.010, [49.17].040 and [49.17].050.

296-155-175 Scope and application. [Statutory Authority: RCW 49.17.050(2) and 49.17.040. WSR 87-10-008 (Order 87-06), § 296-155-175, filed 4/27/87.] Repealed by WSR 87-24-051 (Order 87-24), filed 11/30/87. Statutory Authority: Chapter 49.17 RCW.

296-155-17505 Definitions. [Statutory Authority: RCW 49.17.050(2) and 49.17.040. WSR 87-10-008 (Order 87-06), § 296-155-17505, filed 4/27/87.] Repealed by WSR 87-24-051 (Order 87-24), filed 11/30/87. Statutory Authority: Chapter 49.17 RCW.

296-155-17510 Permissible exposure limits (pel). [Statutory Authority: RCW 49.17.050(2) and 49.17.040. WSR 87-10-008 (Order 87-06), § 296-155-17510, filed 4/27/87.] Repealed by WSR 87-24-051 (Order 87-24), filed 11/30/87. Statutory Authority: Chapter 49.17 RCW.

296-155-17515 Communication among employers. [Statutory Authority: RCW 49.17.050(2) and 49.17.040. WSR 87-10-008 (Order 87-06), § 296-155-17515, filed 4/27/87.] Repealed by WSR 87-24-051 (Order 87-24), filed 11/30/87. Statutory Authority: Chapter 49.17 RCW.

296-155-17520 Identification. [Statutory Authority: RCW 49.17.050(2) and 49.17.040. WSR 87-10-008 (Order 87-06), § 296-155-17520, filed 4/27/87.] Repealed by WSR 87-24-051 (Order 87-24), filed 11/30/87. Statutory Authority: Chapter 49.17 RCW.

296-155-17525 Regulated areas. [Statutory Authority: RCW 49.17.050 (2) and 49.17.040. WSR 87-10-008 (Order 87-06), § 296-155-17525, filed 4/27/87.] Repealed by WSR 87-24-051 (Order 87-24), filed 11/30/87. Statutory Authority: Chapter 49.17 RCW.

296-155-17530 Exposure monitoring. [Statutory Authority: RCW 49.17.050(2) and 49.17.040. WSR 87-10-008 (Order 87-06), § 296-155-17530, filed 4/27/87.] Repealed by WSR 87-24-051 (Order 87-24), filed 11/30/87. Statutory Authority: Chapter 49.17 RCW.

296-155-17532 Methods of compliance. [Statutory Authority: RCW 49.17.050(2) and 49.17.040. WSR 87-10-008 (Order 87-06), § 296-155-17532, filed 4/27/87.] Repealed by WSR 87-24-051 (Order 87-24), filed 11/30/87. Statutory Authority: Chapter 49.17 RCW.

296-155-17535 Respiratory protection. [Statutory Authority: RCW 49.17.050(2) and 49.17.040. WSR 87-10-008 (Order 87-06), § 296-155-17535, filed 4/27/87.] Repealed by WSR 87-24-051 (Order 87-24), filed 11/30/87. Statutory Authority: Chapter 49.17 RCW.

296-155-17540 Protective clothing. [Statutory Authority: RCW 49.17.-050(2) and 49.17.040. WSR 87-10-008 (Order 87-06), § 296-155-17540, filed 4/27/87.] Repealed by WSR 87-24-051 (Order 87-24), filed 11/30/87. Statutory Authority: Chapter 49.17 RCW.

296-155-17545 Hygiene facilities and practices. [Statutory Authority: RCW 49.17.050(2) and 49.17.040. WSR 87-10-008 (Order 87-06), § 296-155-17545, filed 4/27/87.] Repealed by WSR 87-24-051 (Order 87-24), filed 11/30/87. Statutory Authority: Chapter 49.17 RCW.

296-155-17550 Communication of hazards to employees. [Statutory Authority: RCW 49.17.050(2) and 49.17.040. WSR 87-10-008 (Order 87-06), § 296-155-17550, filed 4/27/87.] Repealed by WSR 87-24-051 (Order 87-24), filed 11/30/87. Statutory Authority: Chapter 49.17 RCW.

296-155-17555 Housekeeping. [Statutory Authority: RCW 49.17.050 (2) and 49.17.040. WSR 87-10-008 (Order 87-06), § 296-155-17555, filed 4/27/87.] Repealed by WSR 87-24-051 (Order 87-24), filed 11/30/87.Statutory Authority: Chapter 49.17 RCW.

296-155-17560 Medical surveillance. [Statutory Authority: RCW 49.17.050(2) and 49.17.040. WSR 87-10-008 (Order 87-06), § 296-155-17560, filed 4/27/87.] Repealed by WSR 87-24-051 (Order 87 -24), filed 11/30/87. Statutory Authority: Chapter 49.17 RCW.

296-155-17565 Recordkeeping. [Statutory Authority: RCW 49.17.050 (2) and 49.17.040. WSR 87-10-008 (Order 87-06), § 296-155-17565, filed 4/27/87.] Repealed by WSR 87-24-051 (Order 87-24), filed 11/30/87. Statutory Authority: Chapter 49.17 RCW.

296-155-17570 Dates. [Statutory Authority: RCW 49.17.050(2) and 49.17.040. WSR 87-10-008 (Order 87-06), § 296-155-17570, filed 4/27/87.] Repealed by WSR 87-24-051 (Order 87-24), filed 11/30/87. Statutory Authority: Chapter 49.17 RCW.

296-155-17575 Appendices. [Statutory Authority: RCW 49.17.050(2) and 49.17.040. WSR 87-10-008 (Order 87-06), § 296-155-17575, filed 4/27/87.] Repealed by WSR 87-24-051 (Order 87-24), filed 11/30/87. Statutory Authority: Chapter 49.17 RCW.

296-155-17635 Startup dates. [Statutory Authority: Chapter 49.17 RCW. WSR 93-22-054 (Order 93-07), § 296-155-17635, filed 10/29/93, effective 12/10/93.] Repealed by WSR 99-10-071, filed 5/4/99, effective 9/1/99. Statutory Authority: RCW 49.17.010, [49.17].040 and [49.17].050.

296-155-17656 Appendix D to WAC 296-155-176—Qualitative and quantitative fit test protocols. [Statutory Authority: Chapter 49.17 RCW. WSR 93-22-054 (Order 93-07), § 296-155-17656, filed 10/29/93, effective 12/10/93.] Repealed by WSR 99-10-071, filed 5/4/99, effective 9/1/99. Statutory Authority: RCW 49.17.010, [49.17].040 and [49.17].050.

296-155-177 Appendix A—WISHA reference method —Mandatory. [Statutory Authority: RCW 49.17.050(2) and 49.17.040. WSR 87-10-008 (Order 87-06), § 296-155-177, filed 4/27/87.] Repealed by WSR 87-24-051 (Order 87-24), filed 11/30/87. Statutory Authority: Chapter 49.17 RCW.

296-155-179 Appendix B—Detailed procedure for asbestos, tremolite, anthophyllite, and actinolite sampling and analysis —Nonmandatory. [Statutory Authority: RCW 49.17.050(2) and 49.17.040. WSR 87-10-008 (Order 87-06), § 296-155-179, filed 4/27/87.] Repealed by WSR 87-24-051 (Order 87-24), filed 11/30/87. Statutory Authority: Chapter 49.17 RCW.

296-155-181 Appendix C—Qualitative and quantitative fit testing procedures—Mandatory. [Statutory Authority: RCW 49.17.050(2) and 49.17.040. WSR 87-10-008 (Order 87-06), § 296-155-181, filed 4/27/87.] Repealed by WSR 87-24-051 (Order 87-24), filed 11/30/87. Statutory Authority: Chapter 49.17 RCW.

296-155-183 Appendix D—Medical questionnaires—Mandatory. [Statutory Authority: RCW 49.17.050(2) and 49.17.040. WSR 87-10-008 (Order 87-06), § 296-155-183, filed 4/27/87.] Repealed by WSR 87-24-051 (Order 87-24), filed 11/30/87. Statutory Authority: Chapter 49.17 RCW.

296-155-185 Appendix E—Interpretation and classification of chest roentgenograms—Mandatory. [Statutory Authority: RCW 49.17.050(2) and 49.17.040. WSR 87-10-008 (Order 87-06), § 296-155-185, filed 4/27/87.] Repealed by WSR 87-24 -051 (Order 87-24), filed 11/30/87. Statutory Authority: Chapter 49.17 RCW.

296-155-187 Appendix F—Work practices and engineering controls for major asbestos removal, renovation, and demolition operations—Nonmandatory. [Statutory Authority: RCW 49.17.050(2) and 49.17.040. WSR 87-10-008 (Order 87-06), § 296-155-187, filed 4/27/87.] Repealed by WSR 87-24-051 (Order 87-24), filed 11/30/87. Statutory Authority: Chapter 49.17 RCW.

296-155-189 Appendix G—Work practices and engineering controls for small-scale, short-duration asbestos renovation and maintenance operations—Nonmandatory. [Statutory Authority: RCW 49.17.050(2) and 49.17.040. WSR 87-10-008 (Order 87-06), § 296-155-189, filed 4/27/87.] Repealed by WSR 87-24-051 (Order 87-24), filed 11/30/87. Statutory Authority: Chapter 49.17 RCW.

296-155-191 Appendix H—Substance technical information for asbestos—Nonmandatory. [Statutory Authority: RCW 49.17.050(2) and 49.17.040. WSR 87-10-008 (Order 87-06), § 296-155-191, filed 4/27/87.] Repealed by WSR 87-24-051 (Order 87-24), filed 11/30/87. Statutory Authority: Chapter 49.17 RCW.

296-155-193 Appendix I—Medical surveillance guidelines for asbestos, tremolite, anthophyllite, and actinolite—Nonmandatory. [Statutory Authority: RCW 49.17.050(2) and 49.17.040. WSR 87-10-008 (Order 87-06), § 296-155-193, filed 4/27/87.] Repealed by WSR 87-24-051 (Order 87-24), filed 11/30/87. Statutory Authority: Chapter 49.17 RCW.

296-155-225 Safety belts, droplines, lifelines, and lanyards. [Statutory Authority: RCW 49.17.040 and 49.17.050. WSR 86-03-074 (Order 86-14), § 296-155-225, filed 1/21/86; Order 76-29, § 296-155-225, filed 9/30/76; Order 74-26, § 296-155-225, filed 5/7/74, effective 6/6/74.] Repealed by WSR 91-03-044 (Order 90-18), filed 1/10/91, effective 2/12/91. Statutory Authority: Chapter 49.17 RCW.

296-155-229 Qualified person—Rigging. [Statutory Authority: RCW 49.17.010, [49.17].040, [49.17].050 and [49.17].060. WSR 98-13-069, § 296-155-229, filed 6/15/98, effective 8/15/98.] Decodified by WSR 98-16-067, filed 8/4/98, effective 8/4/98. Later promulgation, see WAC 296-155-329.

296-155-230 Safety nets. [Statutory Authority: RCW 49.17.040 and 49.17.050. WSR 86-03-074 (Order 86-14), § 296-155-230, filed 1/21/86; Order 74-26, § 296-155-230, filed 5/7/74, effective 6/6/74.] Repealed by WSR 91-03-044 (Order 90-18), filed 1/10/91, effective 2/12/91. Statutory Authority: Chapter 49.17 RCW.

296-155-245 Reserve. [Statutory Authority: RCW 49.17.040, [49.17.]050 and [49.17.]060. WSR 96-24-051, § 296-155-245, filed 11/27/96, effective 2/1/97. Statutory Authority: Chapter 49.17 RCW. WSR 95-10-016, § 296-155-245, filed 4/25/95, effective 10/1/95.] Repealed by WSR 13-04-073, filed 2/4/13, effective 4/1/13. Statutory Authority: RCW 49.17.010, 49.17.-040, 49.17.050, 49.17.060 and 29 C.F.R. 1926, Subpart M, Fall Protection. Later promulgation, see WAC 296-155-24601 through 296-155-24624.

296-155-24501 Scope and application. [Statutory Authority: RCW 49.17.010, [49.17].040, and [49.17].050. WSR 00-14-058, § 296-155-24501, filed 7/3/00, effective 10/1/00. Statutory Authority: RCW 49.17.040, [49.17.]050 and [49.17.]060. WSR 96-24-051, § 296-155-24501, filed 11/27/96, effective 2/1/97. Statutory Authority: Chapter 49.17 RCW. WSR 95-10-016, § 296-155-24501, filed 4/25/95, effective 10/1/95; WSR 91-03-044 (Order 90-18), § 296-155-24501, filed 1/10/91, effective 2/12/91.] Repealed by WSR 13-04-073, filed 2/4/13, effective 4/1/13. Statutory Authority: RCW 49.17.010, 49.17.-040, 49.17.050, 49.17.060 and 29 C.F.R. 1926, Subpart M, Fall Protection. Later promulgation, see WAC 296-155-24601 through 296-155-24624.

296-155-24503 Definitions. [Statutory Authority: RCW 49.17.010, [49.17].040, and [49.17].050. WSR 00-14-058, § 296-155-24503, filed 7/3/00, effective 10/1/00. Statutory Authority: RCW 49.17.040, [49.17.]050 and [49.17.]060. WSR 96-24-051, § 296-155-24503, filed 11/27/96, effective 2/1/97. Statutory Authority: Chapter 49.17 RCW. WSR 95-10-016, § 296-155-24503, filed 4/25/95, effective 10/1/95; WSR 91-03-044 (Order 90-18), § 296-155-24503, filed 1/10/91, effective 2/12/91.] Repealed by WSR 13-04-073, filed 2/4/13, effective 4/1/13. Statutory Authority: RCW 49.17.010, 49.17.-040, 49.17.050, 49.17.060 and 29 C.F.R. 1926, Subpart M, Fall Protection. Later promulgation, see WAC 296-155-24601 through 296-155-24624.

296-155-24505 Fall protection work plan. [Statutory Authority: RCW 49.17.010, [49.17].040, and [49.17].050. WSR 00-14-058, § 296-155-24505, filed 7/3/00, effective 10/1/00. Statutory Authority: RCW 49.17.040, [49.17.]050 and [49.17.]060. WSR 96-24-051, § 296-155-24505, filed 11/27/96, effective 2/1/97. Statutory Authority: Chapter 49.17 RCW. WSR 95-10-016, § 296-155-24505, filed 4/25/95, effective 10/1/95; WSR 91-03-044 (Order 90-18), § 296-155-24505, filed 1/10/91, effective 2/12/91.] Repealed by WSR 13-04-073, filed 2/4/13, effective 4/1/13. Statutory Authority: RCW 49.17.010, 49.17.-040, 49.17.050, 49.17.060 and 29 C.F.R. 1926, Subpart M, Fall Protection. Later promulgation, see WAC 296-155-24601 through 296-155-24624.

296-155-24507 Reserve. [Statutory Authority: RCW 49.17.040, [49.17.]050 and [49.17.]060. WSR 96-24-051, § 296-155-24507, filed 11/27/96, effective 2/1/97. Statutory Authority: Chapter 49.17 RCW. WSR 95-10-016, § 296-155-24507, filed 4/25/95, effective 10/1/95.] Repealed by WSR 13-04-073, filed 2/4/13, effective 4/1/13. Statutory Authority: RCW 49.17.010, 49.17.-040, 49.17.050, 49.17.060 and 29 C.F.R. 1926, Subpart M, Fall Protection. Later promulgation, see WAC 296-155-24601 through 296-155-24624.

296-155-24510 Fall restraint, fall arrest systems. [Statutory Authority: RCW 49.17.010, [49.17].040, and [49.17].050. WSR 00-14-058, § 296-155-24510, filed 7/3/00, effective 10/1/00. Statutory Authority: RCW 49.17.040, [49.17.]-050 and [49.17.]060. WSR 96-24-051, § 296-155-24510, filed 11/27/96, effective 2/1/97. Statutory Authority: Chapter 49.17 RCW. WSR 95-10-016, § 296-155-24510, filed 4/25/95, effective 10/1/95; WSR 95-04-007, § 296-155-24510, filed 1/18/95, effective 3/1/95; WSR 93-19-142 (Order 93-04), § 296-155-24510, filed 9/22/93, effective 11/1/93; WSR 91-24-017 (Order 91-07), § 296-155-24510, filed 11/22/91, effective 12/24/91; WSR 91-03-044 (Order 90-18), § 296-155-24510, filed 1/10/91, effective 2/12/91.] Repealed by WSR 13-04-073, filed 2/4/13, effective 4/1/13. Statutory Authority: RCW 49.17.010, 49.17.040, 49.17.050, 49.17.060 and 29 C.F.R. 1926, Subpart M, Fall Protection. Later promulgation, see WAC 296-155-24601 through 296-155-24624.

296-155-24515 Guarding of low pitched roof perimeters. [Statutory Authority: RCW 49.17.010, [49.17].040, and [49.17].050. WSR 00-14-058, § 296-155-24515, filed 7/3/00, effective 10/1/00. Statutory Authority: RCW 49.17.040, [49.17.]050 and [49.17.]060. WSR 96-24-051, § 296-155-24515, filed 11/27/96, effective 2/1/97. Statutory Authority: Chapter 49.17 RCW. WSR 95-10-016, § 296-155-24515, filed 4/25/95, effective 10/1/95; WSR 91-24-017 (Order 91-07), § 296-155-24515, filed 11/22/91, effective 12/24/91; WSR 91-03-044 (Order 90-18), § 296-155-24515, filed 1/10/91, effective 2/12/91.] Repealed by WSR 13-04-073, filed 2/4/13, effective 4/1/13. Statutory Authority: RCW 49.17.010, 49.17.040, 49.17.050, 49.17.060 and 29 C.F.R. 1926, Subpart M, Fall Protection. Later promulgation, see WAC 296-155-24601 through 296-155-24624.

296-155-24519 Reserve. [Statutory Authority: RCW 49.17.040, [49.17.]050 and [49.17.]060. WSR 96-24-051, § 296-155-24519, filed 11/27/96, effective 2/1/97. Statutory Authority: Chapter 49.17 RCW. WSR 95-10-016, § 296-155-24519, filed 4/25/95, effective 10/1/95.] Repealed by WSR 13-04-073, filed 2/4/13, effective 4/1/13. Statutory Authority: RCW 49.17.010, 49.17.-040, 49.17.050, 49.17.060 and 29 C.F.R. 1926, Subpart M, Fall Protection. Later promulgation, see WAC 296-155-24601 through 296-155-24624.

296-155-24520 Leading edge control zone. [Statutory Authority: RCW 49.17.010, [49.17].040, and [49.17].050. WSR 00-14-058, § 296-155-24520, filed 7/3/00, effective 10/1/00. Statutory Authority: RCW 49.17.040, [49.17.]050 and [49.17.]060. WSR 96-24-051, § 296-155-24520, filed 11/27/96, effective 2/1/97. Statutory Authority: Chapter 49.17 RCW. WSR 95-10-016, § 296-155-24520, filed 4/25/95, effective 10/1/95; WSR 91-24-017 (Order 91-07), § 296-155-24520, filed 11/22/91, effective 12/24/91; WSR 91-03-044 (Order 90-18), § 296-155-24520, filed 1/10/91, effective 2/12/91.] Repealed by WSR 13-04-073, filed 2/4/13, effective 4/1/13. Statutory Authority: RCW 49.17.010, 49.17.040, 49.17.050, 49.17.060 and 29 C.F.R. 1926, Subpart M, Fall Protection. Later promulgation, see WAC 296-155-24601 through 296-155-24624.

296-155-24521 Safety monitor system. [Statutory Authority: RCW 49.17.010, [49.17].040, and [49.17].050. WSR 00-14-058, § 296-155-24521, filed 7/3/00, effective 10/1/00. Statutory Authority: RCW 49.17.040, [49.17.]050 and [49.17.]060. WSR 96-24-051, § 296-155-24521, filed 11/27/96, effective 2/1/97. Statutory Authority: Chapter 49.17 RCW. WSR 95-10-016, § 296-155-24521, filed 4/25/95, effective 10/1/95; WSR 91-03-044 (Order 90-18), § 296-155-24521, filed 1/10/91, effective 2/12/91.] Repealed by WSR 13-04-073, filed 2/4/13, effective 4/1/13. Statutory Authority: RCW 49.17.010, 49.17.-040, 49.17.050, 49.17.060 and 29 C.F.R. 1926, Subpart M, Fall Protection. Later promulgation, see WAC 296-155-24601 through 296-155-24624.

296-155-24522 Reserve. [Statutory Authority: RCW 49.17.040, [49.17.]050 and [49.17.]060. WSR 96-24-051, § 296-155-24522, filed 11/27/96, effective 2/1/97. Statutory Authority: Chapter 49.17 RCW. WSR 95-10-016, § 296-155-24522, filed 4/25/95, effective 10/1/95.] Repealed by WSR 13-04-073, filed 2/4/13, effective 4/1/13. Statutory Authority: RCW 49.17.010, 49.17.-040, 49.17.050, 49.17.060 and 29 C.F.R. 1926, Subpart M, Fall Protection. Later promulgation, see WAC 296-155-24601 through 296-155-24624.

296-155-24523 Appendix A to Part C-1—Determining roof widths nonmandatory guidelines for complying with WAC 296-155-24515 (2)(b). [Statutory Authority: RCW 49.17.-040, [49.17.]050 and [49.17.]060. WSR 96-24-051, § 296-155-24523, filed 11/27/96, effective 2/1/97. Statutory Authority: Chapter 49.17 RCW. WSR 95-10-016, § 296-155-24523, filed 4/25/95, effective 10/1/95.] Repealed by WSR 13-04-073, filed 2/4/13, effective 4/1/13. Statutory Authority: RCW 49.17.010, 49.17.-040, 49.17.050, 49.17.060 and 29 C.F.R. 1926, Subpart M, Fall Protection. Later promulgation, see WAC 296-155-24601 through 296-155-24624.

296-155-24524 Reserve. [Statutory Authority: RCW 49.17.040, [49.17.]050 and [49.17.]060. WSR 96-24-051, § 296-155-24524, filed 11/27/96, effective 2/1/97. Statutory Authority: Chapter 49.17 RCW. WSR 95-10-016, § 296-155-24524, filed 4/25/95, effective 10/1/95.] Repealed by WSR 13-04-073, filed 2/4/13, effective 4/1/13. Statutory Authority: RCW 49.17.010, 49.17.-040, 49.17.050, 49.17.060 and 29 C.F.R. 1926, Subpart M, Fall Protection. Later promulgation, see WAC 296-155-24601 through 296-155-24624.

296-155-24525 Appendix B to Part C-1—Fall restraint and fall arrest (employer information only). [Statutory Authority: RCW 49.17.010, 49.17.040, 49.17.050, 49.17.440, 49.17.060, and 29 C.F.R. 1926, Subpart CC. WSR 12-01-086, § 296-155-24525, filed 12/20/11, effective 2/1/12. Statutory Authority: RCW 49.17.010, [49.17].-040, [49.17].050. WSR 02-12-098, § 296-155-24525, filed 6/5/02, effective 8/1/02; WSR 00-14-058, § 296-155-24525, filed 7/3/00, effective 10/1/00. Statutory Authority: RCW 49.17.010, [49.17].040, [49.17].050 and [49.17].060. WSR 98-05-046, § 296-155-24525, filed 2/13/98, effective 4/15/98. Statutory Authority: RCW 49.17.040, [49.17.]050 and [49.17.]060. WSR 96-24-051, § 296-155-24525, filed 11/27/96, effective 2/1/97. Statutory Authority: Chapter 49.17 RCW. WSR 95-10-016, § 296-155-24525, filed 4/25/95, effective 10/1/95; WSR 91-03-044 (Order 90-18), § 296-155-24525, filed 1/10/91, effective 2/12/91.] Repealed by WSR 13-04-073, filed 2/4/13, effective 4/1/13. Statutory Authority: RCW 49.17.010, 49.17.040, 49.17.050, 49.17.060 and 29 C.F.R. 1926, Subpart M, Fall Protection. Later promulgation, see WAC 296-155-24601 through 296-155-24624.

296-155-300 Accident prevention signs and tags. [Statutory Authority: RCW 49.17.010, 49.17.040, 49.17.050, and 49.17.060. WSR 03-06-075, § 296-155-300, filed 3/4/03, effective 8/1/03. Statutory Authority: Chapter 49.17 RCW. WSR 93-19-142 (Order 93-04), § 296-155-300, filed 9/22/93, effective 11/1/93; WSR 93-01-067 (Order 92-15), § 296-155-300, filed 12/11/92, effective 1/15/93. Statutory Authority: RCW 49.17.040 and 49.17.050. WSR 86-03-074 (Order 86-14), § 296-155-300, filed 1/21/86; Order 74-26, § 296-155-300, filed 5/7/74, effective 6/6/74.] Repealed by WSR 04-18-080, filed 8/31/04, effective 11/1/04. Statutory Authority: RCW 49.17.010, 49.17.040, 49.17.050, 49.17.060. Later promulgation, see WAC 296-800-11045.

296-155-329 Qualified person—Rigging. [Statutory Authority: RCW 49.17.010, 49.17.040, 49.17.050, 49.17.440, 49.17.060, and 29 C.F.R. 1926, Subpart CC. WSR 12-01-086, § 296-155-329, filed 12/20/11, effective 2/1/12. WSR 98-16-067, recodified as § 296-155-329, filed 8/4/98, effective 8/4/98. Statutory Authority: RCW 49.17.010, [49.17].040, [49.17].050 and [49.17].060. WSR 98-13-069, § 296-155-229, filed 6/15/98, effective 8/15/98.] Repealed by WSR 13-02-068, filed 12/31/12, effective 2/1/13. Statutory Authority: RCW 49.17.010, 49.17.-040, 49.17.050, 49.17.060 and chapter 49.17 RCW, and 29 C.F.R. 1926, Subpart CC.

296-155-330 Rigging equipment for material handling. [Statutory Authority: RCW 49.17.010, [49.17].040, [49.17].050 and [49.17].060. WSR 98-13-069, § 296-155-330, filed 6/15/98, effective 8/15/98. Statutory Authority: Chapter 49.17 RCW. WSR 94-15-096 (Order 94-07), § 296-155-330, filed 7/20/94, effective 9/20/94. Statutory Authority: RCW 49.17.040 and 49.17.050. WSR 86-03-074 (Order 86-14), § 296-155-330, filed 1/21/86. Statutory Authority: RCW 49.17.040, 49.17.150, and 49.17.240. WSR 79-08-115 (Order 79-9), § 296-155-330, filed 7/31/79; Order 76-29, § 296-155-330, filed 9/30/76; Order 74-26, § 296-155-330, filed 5/7/74, effective 6/6/74.] Repealed by WSR 12-01-086, filed 12/20/11, effective 2/1/12. Statutory Authority: RCW 49.17.010, 49.17.040, 49.17.050, 49.17.440, 49.17.060, and 29 C.F.R. 1926, Subpart CC.

296-155-34901 Table F-1. [Order 74-26, § 296-155-335 (part), Table F-1 (codified as WAC 296-155-34901), filed 5/7/74, effective 6/6/74.] Repealed by WSR 12-01-086, filed 12/20/11, effective 2/1/12. Statutory Authority: RCW 49.17.010, 49.17.040, 49.17.050, 49.17.440, 49.17.060, and 29 C.F.R. 1926, Subpart CC.

296-155-34902 Table F-2. [Order 74-26, § 296-155-335 (part), Table F-2 (codified as WAC 296-155-34902), filed 5/7/74, effective 6/6/74.] Repealed by WSR 12-01-086, filed 12/20/11, effective 2/1/12. Statutory Authority: RCW 49.17.010, 49.17.040, 49.17.050, 49.17.440, 49.17.060, and 29 C.F.R. 1926, Subpart CC.

296-155-34903 Table F-3. [Order 74-26, § 296-155-335 (part), Table F-3 (codified as WAC 296-155-34903), filed 5/7/74, effective 6/6/74.] Repealed by WSR 12-01-086, filed 12/20/11, effective 2/1/12. Statutory Authority: RCW 49.17.010, 49.17.040, 49.17.050, 49.17.440, 49.17.060, and 29 C.F.R. 1926, Subpart CC.

296-155-34904 Table F-4. [Order 74-26, § 296-155-335 (part), Table F-4 (codified as WAC 296-155-34904), filed 5/7/74, effective 6/6/74.] Repealed by WSR 12-01-086, filed 12/20/11, effective 2/1/12. Statutory Authority: RCW 49.17.010, 49.17.040, 49.17.050, 49.17.440, 49.17.060, and 29 C.F.R. 1926, Subpart CC.

296-155-34905 Table F-5. [Order 74-26, § 296-155-335 (part), Table F-5 (codified as WAC 296-155-34905), filed 5/7/74, effective 6/6/74.] Repealed by WSR 12-01-086, filed 12/20/11, effective 2/1/12. Statutory Authority: RCW 49.17.010, 49.17.040, 49.17.050, 49.17.440, 49.17.060, and 29 C.F.R. 1926, Subpart CC.

296-155-34906 Table F-6. [Order 74-26, § 296-155-335 (part), Table F-6 (codified as WAC 296-155-34906), filed 5/7/74, effective 6/6/74.] Repealed by WSR 12-01-086, filed 12/20/11, effective 2/1/12. Statutory Authority: RCW 49.17.010, 49.17.040, 49.17.050, 49.17.440, 49.17.060, and 29 C.F.R. 1926, Subpart CC.

296-155-34907 Table F-7. [Order 74-26, § 296-155-335 (part), Table F-7 (codified as WAC 296-155-34907), filed 5/7/74, effective 6/6/74.] Repealed by WSR 12-01-086, filed 12/20/11, effective 2/1/12. Statutory Authority: RCW 49.17.010, 49.17.040, 49.17.050, 49.17.440, 49.17.060, and 29 C.F.R. 1926, Subpart CC.

296-155-34908 Table F-8. [Order 74-26, § 296-155-335 (part), Table F-8 (codified as WAC 296-155-34908), filed 5/7/74, effective 6/6/74.] Repealed by WSR 12-01-086, filed 12/20/11, effective 2/1/12. Statutory Authority: RCW 49.17.010, 49.17.040, 49.17.050, 49.17.440, 49.17.060, and 29 C.F.R. 1926, Subpart CC.

296-155-34909 Table F-9. [Order 74-26, § 296-155-335 (part), Table F-9 (codified as WAC 296-155-34909), filed 5/7/74, effective 6/6/74.] Repealed by WSR 12-01-086, filed 12/20/11, effective 2/1/12. Statutory Authority: RCW 49.17.010, 49.17.040, 49.17.050, 49.17.440, 49.17.060, and 29 C.F.R. 1926, Subpart CC.

296-155-34910 Table F-10. [Order 74-26, § 296-155-335 (part), Table F-10 (codified as WAC 296-155-34910), filed 5/7/74, effective 6/6/74.] Repealed by WSR 12-01-086, filed 12/20/11, effective 2/1/12. Statutory Authority: RCW 49.17.010, 49.17.040, 49.17.050, 49.17.440, 49.17.060, and 29 C.F.R. 1926, Subpart CC.

296-155-34911 Table F-11. [Statutory Authority: RCW 49.17.040 and 49.17.050. WSR 86-03-074 (Order 86-14), § 296-155-34911, filed 1/21/86; Order 74-26, § 296-155-335 (part), Table F-11 (codified as WAC 296-155-34911), filed 5/7/74, effective 6/6/74.] Repealed by WSR 12-01-086, filed 12/20/11, effective 2/1/12. Statutory Authority: RCW 49.17.010, 49.17.040, 49.17.050, 49.17.440, 49.17.060, and 29 C.F.R. 1926, Subpart CC.

296-155-34912 Table F-12. [Statutory Authority: RCW 49.17.040 and 49.17.050. WSR 86-03-074 (Order 86-14), § 296-155-34912, filed 1/21/86; Order 74-26, § 296-155-335 (part), Table F-12 (codified as WAC 296-155-34912), filed 5/7/74, effective 6/6/74.] Repealed by WSR 12-01-086, filed 12/20/11, effective 2/1/12. Statutory Authority: RCW 49.17.010, 49.17.040, 49.17.050, 49.17.440, 49.17.060, and 29 C.F.R. 1926, Subpart CC.

296-155-34913 Table F-13. [Statutory Authority: RCW 49.17.040 and 49.17.050. WSR 86-03-074 (Order 86-14), § 296-155-34913, filed 1/21/86; Order 74-26, § 296-155-335 (part), Table F-13 (codified as WAC 296-155-34913), filed 5/7/74, effective 6/6/74.] Repealed by WSR 12-01-086, filed 12/20/11, effective 2/1/12. Statutory Authority: RCW 49.17.010, 49.17.040, 49.17.050, 49.17.440, 49.17.060, and 29 C.F.R. 1926, Subpart CC.

296-155-34914 Table F-14. [Statutory Authority: RCW 49.17.040 and 49.17.050. WSR 86-03-074 (Order 86-14), § 296-155-34914, filed 1/21/86; Order 74-26, § 296-155-335 (part), Table F-14 (codified as WAC 296-155-34914), filed 5/7/74, effective 6/6/74.] Repealed by WSR 12-01-086, filed 12/20/11, effective 2/1/12. Statutory Authority: RCW 49.17.010, 49.17.040, 49.17.050, 49.17.440, 49.17.060, and 29 C.F.R. 1926, Subpart CC.

296-155-34915 Table F-15. [Order 74-26, § 296-155-335 (part), Table F-15 (codified as WAC 296-155-34915), filed 5/7/74, effective 6/6/74.] Repealed by WSR 12-01-086, filed 12/20/11, effective 2/1/12. Statutory Authority: RCW 49.17.010, 49.17.040, 49.17.050, 49.17.440, 49.17.060, and 29 C.F.R. 1926, Subpart CC.

296-155-34916 Table F-16. [Order 74-26, § 296-155-335 (part), Table F-16 (codified as WAC 296-155-34916), filed 5/7/74, effective 6/6/74.] Repealed by WSR 12-01-086, filed 12/20/11, effective 2/1/12. Statutory Authority: RCW 49.17.010, 49.17.040, 49.17.050, 49.17.440, 49.17.060, and 29 C.F.R. 1926, Subpart CC.

296-155-34917 Table F-17. [Order 74-26, § 296-155-335 (part), Table F-17 (codified as WAC 296-155-34917), filed 5/7/74, effective 6/6/74.] Repealed by WSR 12-01-086, filed 12/20/11, effective 2/1/12. Statutory Authority: RCW 49.17.010, 49.17.040, 49.17.050, 49.17.440, 49.17.060, and 29 C.F.R. 1926, Subpart CC.

296-155-34918 Table F-18. [Order 74-26, § 296-155-335 (part), Table F-18 (codified as WAC 296-155-34918), filed 5/7/74, effective 6/6/74.] Repealed by WSR 12-01-086, filed 12/20/11, effective 2/1/12. Statutory Authority: RCW 49.17.010, 49.17.040, 49.17.050, 49.17.440, 49.17.060, and 29 C.F.R. 1926, Subpart CC.

296-155-34919 Table F-19. [Order 74-26, § 296-155-335 (part), Table F-19 (codified as WAC 296-155-34919), filed 5/7/74, effective 6/6/74.] Repealed by WSR 12-01-086, filed 12/20/11, effective 2/1/12. Statutory Authority: RCW 49.17.010, 49.17.040, 49.17.050, 49.17.440, 49.17.060, and 29 C.F.R. 1926, Subpart CC.

296-155-34920 Table F-20. [Statutory Authority: Chapter 49.17 RCW. WSR 94-15-096 (Order 94-07), § 296-155-34920, filed 7/20/94, effective 9/20/94. Statutory Authority: RCW 49.17.040 and 49.17.050. WSR 86-03-074 (Order 86-14), § 296-155-34920, filed 1/21/86; Order 74-26, § 296-155-335 (part), Table F-20 (codified as WAC 296-155-34920), filed 5/7/74, effective 6/6/74.] Repealed by WSR 12-01-086, filed 12/20/11, effective 2/1/12. Statutory Authority: RCW 49.17.010, 49.17.040, 49.17.050, 49.17.440, 49.17.060, and 29 C.F.R. 1926, Subpart CC.

296-155-425 Definitions applicable to this part. [Statutory Authority: RCW 49.17.040 and 49.17.050. WSR 86-03-074 (Order 86-14), § 296-155-425, filed 1/21/86; Order 74-26, § 296-155-425, filed 5/7/74, effective 6/6/74.] Repealed by WSR 88-11-021 (Order 88-04), filed 5/11/88. Statutory Authority: Chapter 49.17 RCW.

296-155-430 General requirements. [Statutory Authority: RCW 49.17.040 and 49.17.050. WSR 86-03-074 (Order 86-14), § 296-155-430, filed 1/21/86; Order 77-20, § 296-155-430, filed 10/18/77; Order 77-12, § 296-155-430, filed 7/11/77; Order 74-26, § 296-155-430, filed 5/7/74, effective 6/6/74.] Repealed by WSR 88-11-021 (Order 88-04), filed 5/11/88. Statutory Authority: Chapter 49.17 RCW.

296-155-435 Grounding and bonding. [Statutory Authority: RCW 49.17.040 and 49.17.050. WSR 86-03-074 (Order 86-14), § 296-155-435, filed 1/21/86; Order 74-26, § 296-155-435, filed 5/7/74, effective 6/6/74.] Repealed by WSR 88-11-021 (Order 88-04), filed 5/11/88. Statutory Authority: Chapter 49.17 RCW.

296-155-440 Equipment installation and maintenance. [Statutory Authority: RCW 49.17.040 and 49.17.050. WSR 86-03-074 (Order 86-14), § 296 -155-440, filed 1/21/86; Order 74-26, § 296-155-440, filed 5/7/74, effective 6/6/74.] Repealed by WSR 88-11-021 (Order 88-04), filed 5/11/88. Statutory Authority: Chapter 49.17 RCW.

296-155-450 Battery rooms and battery charging. [Order 74-26, § 296-155-450, filed 5/7/74, effective 6/6/74.] Repealed by WSR 88-11-021 (Order 88-04), filed 5/11/88. Statutory Authority: Chapter 49.17 RCW.

296-155-455 Hazardous locations. [Order 74-26, § 296-155-455, filed 5/7/74, effective 6/6/74.] Repealed by WSR 88-11-021 (Order 88-04), filed 5/11/88. Statutory Authority: Chapter 49.17 RCW.

296-155-480 Fixed ladders. [Statutory Authority: RCW 49.17.010, 49.17.040, 49.17.050, 49.17.060. WSR 05-20-068, § 296-155-480, filed 10/4/05, effective 1/1/06. Statutory Authority: RCW 49.17.040, [49.17.]050 and [49.17.]-060. WSR 96-24-051, § 296-155-480, filed 11/27/96, effective 2/1/97. Statutory Authority: Chapter 49.17 RCW. WSR 95-10-016, § 296-155-480, filed 4/25/95, effective 10/1/95; WSR 94-15-096 (Order 94-07), § 296-155-480, filed 7/20/94, effective 9/20/94; WSR 91-24-017 (Order 91-07), § 296-155-480, filed 11/22/91, effective 12/24/91; WSR 91-03-044 (Order 90-18), § 296-155-480, filed 1/10/91, effective 2/12/91; WSR 90-09-026 (Order 90-01), § 296-155-480, filed 4/10/90, effective 5/25/90. Statutory Authority: RCW 49.17.040 and 49.17.050. WSR 86-03-074 (Order 86-14), § 296-155-480, filed 1/21/86. Statutory Authority: RCW 49.17.040, 49.17.150, and 49.17.240. WSR 79-08-115 (Order 79-9), § 296-155-480, filed 7/31/79; Order 76-29, § 296-155-480, filed 9/30/76; Order 76-6, § 296-155-480, filed 3/1/76; Order 74-26, § 296-155-480, filed 5/7/74, effective 6/6/74.] Repealed by WSR 06-16-020, filed 7/24/06, effective 12/1/06. Statutory Authority: RCW 49.17.010, 49.17.040, 49.17.050, 49.17.060.

296-155-48060 Training requirements. [Statutory Authority: Chapter 49.17 RCW. WSR 91-24-017 (Order 91-07), § 296-155-48060, filed 11/22/91, effective 12/24/91.] Repealed by WSR 06-16-020, filed 7/24/06, effective 12/1/06. Statutory Authority: RCW 49.17.010, 49.17.040, 49.17.050, 49.17.060.

296-155-48080 Appendix A. [Statutory Authority: RCW 49.17.010, 49.17.040, 49.17.050, 49.17.060. WSR 05-20-068, § 296-155-48080, filed 10/4/05, effective 1/1/06. Statutory Authority: Chapter 49.17 RCW. WSR 91-24-017 (Order 91-07), § 296-155-48080, filed 11/22/91, effective 12/24/91.] Repealed by WSR 06-16-020, filed 7/24/06, effective 12/1/06. Statutory Authority: RCW 49.17.010, 49.17.040, 49.17.050, 49.17.060.

296-155-48090 Reserved. [Statutory Authority: Chapter 49.17 RCW. WSR 91-24-017 (Order 91-07), § 296-155-48090, filed 11/22/91, effective 12/24/91; Order 76-29, Table J-18 (codified as WAC 296-155-48090), filed 9/30/76; Order 76-6, Table J-18, filed 3/1/76. Formerly 296-155-480 (part).] Repealed by WSR 06-16-020, filed 7/24/06, effective 12/1/06. Statutory Authority: RCW 49.17.010, 49.17.040, 49.17.050, 49.17.060.

296-155-481 Scope and application. [Statutory Authority: RCW 49.17.010, [49.17].040, [49.17].050 and [49.17].060. WSR 98-05-046, § 296-155-481, filed 2/13/98, effective 4/15/98. Statutory Authority: Chapter 49.17 RCW. WSR 91-24-017 (Order 91-07), § 296-155-481, filed 11/22/91, effective 12/24/91.] Repealed by WSR 06-19-073, filed 9/19/06, effective 1/1/07. Statutory Authority: RCW 49.17.010, 49.17.040, 49.17.050, 49.17.060.

296-155-482 Definitions applicable to this part. [Statutory Authority: RCW 49.17.010, [49.17].040, [49.17].050 and [49.17].-060. WSR 98-05-046, § 296-155-482, filed 2/13/98, effective 4/15/98.] Repealed by WSR 06-19-073, filed 9/19/06, effective 1/1/07. Statutory Authority: RCW 49.17.010, 49.17.040, 49.17.050, 49.17.060.

296-155-483 General requirements. [Statutory Authority: RCW 49.17.010, [49.17].040, and [49.17].050. WSR 00-14-058, § 296-155-483, filed 7/3/00, effective 10/1/00. Statutory Authority: RCW 49.17.010, [49.17].040, [49.17].050 and [49.17].060. WSR 98-05-046, § 296-155-483, filed 2/13/98, effective 4/15/98. Statutory Authority: Chapter 49.17 RCW. WSR 91-24-017 (Order 91-07), § 296-155-483, filed 11/22/91, effective 12/24/91.] Repealed by WSR 05-01-054, filed 12/7/04, effective 3/1/05. Statutory Authority: RCW 49.17.010, 49.17.040, 49.17.050, 49.17.060.

296-155-484 Additional requirements applicable to specific types of scaffolds. [Statutory Authority: RCW 49.17.010, [49.17].040, [49.17].050 and [49.17].060. WSR 98-05-046, § 296-155-484, filed 2/13/98, effective 4/15/98.] Repealed by WSR 05-01-054, filed 12/7/04, effective 3/1/05. Statutory Authority: RCW 49.17.010, 49.17.-040, 49.17.050, 49.17.060.

296-155-485 Reserved. [Statutory Authority: RCW 49.17.010, [49.17].040, [49.17].050 and [49.17].060. WSR 98-05-046, § 296-155-485, filed 2/13/98, effective 4/15/98. Statutory Authority: RCW 49.17.040, [49.17.]050 and [49.17.]060. WSR 96-24-051, § 296-155-485, filed 11/27/96, effective 2/1/97. Statutory Authority: Chapter 49.17 RCW. WSR 95-10-016, § 296-155-485, filed 4/25/95, effective 10/1/95; WSR 94-15-096 (Order 94-07), § 296-155-485, filed 7/20/94, effective 9/20/94; WSR 91-24-017 (Order 91-07), § 296-155-485, filed 11/22/91, effective 12/24/91; WSR 91-03-044 (Order 90-18), § 296-155-485, filed 1/10/91, effective 2/12/91; WSR 90-03-029 (Order 89-20), § 296-155-485, filed 1/11/90, effective 2/26/90. Statutory Authority: RCW 49.17.040 and 49.17.050. WSR 86-03-074 (Order 86-14), § 296-155-485, filed 1/21/86; WSR 82-08-026 (Order 82-10), § 296-155-485, filed 3/30/82. Statutory Authority: RCW 49.17.040, 49.17.150, and 49.17.240. WSR 79-08-115 (Order 79-9), § 296-155-485, filed 7/31/79; Order 76-29, § 296-155-485, filed 9/30/76; Order 76-6, § 296-155-485, filed 3/1/76; Order 74-26, § 296-155-485, filed 5/7/74, effective 6/6/74.] Repealed by WSR 05-01-054, filed 12/7/04, effective 3/1/05. Statutory Authority: RCW 49.17.010, 49.17.040, 49.17.050, 49.17.060.

296-155-48501 Figure J-1. [Order 76-29, Figure J-1 (codified as WAC 296-155-48501), filed 9/30/76; Order 74-26, § 296-155-485 (part), Figure J-1, filed 5/7/74, effective 6/6/74.] Repealed by WSR 82-08-026 (Order 82-10), filed 3/30/82. Statutory Authority: RCW 49.17.040 and 49.17.050.

296-155-48502 Figure J-2. [Order 76-29, Figure J-2 (codified as WAC 296-155-48502), filed 9/30/76; Order 74-26, § 296-155-485 (part), Figure J-2, filed 5/7/74, effective 6/6/74.] Repealed by WSR 82-08-026 (Order 82-10), filed 3/30/82. Statutory Authority: RCW 49.17.040 and 49.17.050.

296-155-48503 Table J-1. [Order 76-29, Table J-1 (codified as WAC 296-155-48503), filed 9/30/76; Order 74-26, § 296-155-485 (part), Table J-1, filed 5/7/74, effective 6/6/74.] Repealed by WSR 98-05-046, filed 2/13/98, effective 4/15/98. Statutory Authority: RCW 49.17.010, [49.17].-040, [49.17].050 and [49.17].060.

296-155-48504 Table J-2. [Order 76-29, Table J-2 (codified as WAC 296-155-48504), filed 9/30/76; Order 74-26, § 296-155-485 (part), Table J-2, filed 5/7/74, effective 6/6/74.] Repealed by WSR 98-05-046, filed 2/13/98, effective 4/15/98. Statutory Authority: RCW 49.17.010, [49.17].-040, [49.17].050 and [49.17].060.

296-155-48505 Table J-3. [Order 76-29, Table J-3 (codified as WAC 296-155-48505), filed 9/30/76; Order 74-26, § 296-155-485 (part), Table J-3, filed 5/7/74, effective 6/6/74.] Repealed by WSR 98-05-046, filed 2/13/98, effective 4/15/98. Statutory Authority: RCW 49.17.010, [49.17].-040, [49.17].050 and [49.17].060.

296-155-48506 Table J-4. [Order 76-29, Table J-4 (codified as WAC 296-155-48506), filed 9/30/76; Order 74-26, § 296-155-485 (part), Table J-4, filed 5/7/74, effective 6/6/74.] Repealed by WSR 98-05-046, filed 2/13/98, effective 4/15/98. Statutory Authority: RCW 49.17.010, [49.17].-040, [49.17].050 and [49.17].060.

296-155-48507 Table J-5. [Order 76-29, Table J-5 (codified as WAC 296-155-48507), filed 9/30/76; Order 74-26, § 296-155-485 (part), Table J-5, filed 5/7/74, effective 6/6/74.] Repealed by WSR 98-05-046, filed 2/13/98, effective 4/15/98. Statutory Authority: RCW 49.17.010, [49.17].-040, [49.17].050 and [49.17].060.

296-155-48508 Table J-6. [Order 76-29, Table J-6 (codified as WAC 296-155-48508), filed 9/30/76; Order 74-26, § 296-155-485 (part), Table J-6, filed 5/7/74, effective 6/6/74.] Repealed by WSR 98-05-046, filed 2/13/98, effective 4/15/98. Statutory Authority: RCW 49.17.010, [49.17].-040, [49.17].050 and [49.17].060.

296-155-48509 Table J-7. [Order 76-29, Table J-7 (codified as WAC 296-155-48509), filed 9/30/76; Order 74-26, § 296-155-485 (part), Table J-7, filed 5/7/74, effective 6/6/74.] Repealed by WSR 98-05-046, filed 2/13/98, effective

4/15/98. Statutory Authority: RCW 49.17.010, [49.17].-040, [49.17].050 and [49.17].060.

296-155-48510 Table J-8. [Order 76-29, Table J-8 (codified as WAC 296-155-48510), filed 9/30/76; Order 74-26, § 296-155-485 (part), Table J-8, filed 5/7/74, effective 6/6/74.] Repealed by WSR 98-05-046, filed 2/13/98, effective 4/15/98. Statutory Authority: RCW 49.17.010, [49.17].-040, [49.17].050 and [49.17].060.

296-155-48511 Table J-9. [Order 76-29, Table J-9 (codified as WAC 296-155-48511), filed 9/30/76; Order 74-26, § 296-155-485 (part), Table J-9, filed 5/7/74, effective 6/6/74.] Repealed by WSR 98-05-046, filed 2/13/98, effective 4/15/98. Statutory Authority: RCW 49.17.010, [49.17].-040, [49.17].050 and [49.17].060.

296-155-48512 Table J-10. [Order 76-29, Table J-10 (codified as WAC 296-155-48512), filed 9/30/76; Order 74-26, § 296-155-485 (part), Table J-10, filed 5/7/74, effective 6/6/74.] Repealed by WSR 98-05-046, filed 2/13/98, effective 4/15/98. Statutory Authority: RCW 49.17.010, [49.17].-040, [49.17].050 and [49.17].060.

296-155-48513 Table J-11. [Order 76-29, Table J-11 (codified as WAC 296-155-48513), filed 9/30/76; Order 74-26, § 296-155-485 (part), Table J-11, filed 5/7/74, effective 6/6/74.] Repealed by WSR 98-05-046, filed 2/13/98, effective 4/15/98. Statutory Authority: RCW 49.17.010, [49.17].-040, [49.17].050 and [49.17].060.

296-155-48514 Table J-12. [Order 76-29, Table J-12 (codified as WAC 296-155-48514), filed 9/30/76; Order 74-26, § 296-155-485 (part), Table J-12, filed 5/7/74, effective 6/6/74.] Repealed by WSR 98-05-046, filed 2/13/98, effective 4/15/98. Statutory Authority: RCW 49.17.010, [49.17].-040, [49.17].050 and [49.17].060.

296-155-48515 Table J-13. [Order 76-29, Table J-13 (codified as WAC 296-155-48515), filed 9/30/76; Order 74-26, § 296-55-485 (part), Table J-13, filed 5/7/74, effective 6/6/74.] Repealed by WSR 98-05-046, filed 2/13/98, effective 4/15/98. Statutory Authority: RCW 49.17.010, [49.17].-040, [49.17].050 and [49.17].060.

296-155-48516 Table J-14. [Order 76-29, Table J-14 (codified as WAC 296-155-48516), filed 9/30/76; Order 74-26, § 296-155-485 (part), Table J-14, filed 5/7/74, effective 6/6/74.] Repealed by WSR 98-05-046, filed 2/13/98, effective 4/15/98. Statutory Authority: RCW 49.17.010, [49.17].-040, [49.17].050 and [49.17].060.

296-155-48517 Table J-15. [Order 76-29, Table J-15 (codified as WAC 296-155-48517), filed 9/30/76; Order 74-26, § 296-155-485 (part), Table J-15, filed 5/7/74, effective 6/6/74.] Repealed by WSR 98-05-046, filed 2/13/98, effective 4/15/98. Statutory Authority: RCW 49.17.010, [49.17].-040, [49.17].050 and [49.17].060.

296-155-48518 Table J-16. [Order 76-29, Table J-16 (codified as WAC 296-155-48518), filed 9/30/76; Order 74-26, § 296-155-485 (part), Table J-16, filed 5/7/74, effective 6/6/74.] Repealed by WSR 98-05-046, filed 2/13/98, effective 4/15/98. Statutory Authority: RCW 49.17.010, [49.17].-040, [49.17].050 and [49.17].060.

296-155-48519 Table J-17. [Order 76-29, Table J-17 (codified as WAC 296-155-48519), filed 9/30/76; Order 74-26, § 296-155-485 (part), Table J-17, filed 5/7/74, effective 6/6/74.] Repealed by WSR 98-05-046, filed 2/13/98, effective 4/15/98. Statutory Authority: RCW 49.17.010, [49.17].-040, [49.17].050 and [49.17].060.

296-155-48523 Manually propelled mobile ladder stands and scaffolds (towers). [Statutory Authority: Chapter 49.17 RCW. WSR 94-15-096 (Order 94-07), § 296-155-48523, filed 7/20/94, effective 9/20/94. Statutory Authority: RCW 49.17.040 and 49.17.050. WSR 86-03-074 (Order 86-14), § 296-155-48523, filed 1/21/86.] Repealed by WSR 98-05-046, filed 2/13/98, effective 4/15/98. Statutory Authority: RCW 49.17.010, [49.17].040, [49.17].050 and [49.17].060.

296-155-48525 Manually propelled elevating work platforms. [Statutory Authority: RCW 49.17.040 and 49.17.050. WSR 86-03-074 (Order 86-14), § 296-155-48525, filed 1/21/86.] Repealed by WSR 98-05-046, filed 2/13/98, effective 4/15/98. Statutory Authority: RCW 49.17.010, [49.17].040, [49.17].050 and [49.17].060.

296-155-48527 Self propelled elevating work platforms. [Statutory Authority: Chapter 49.17 RCW. WSR 92-17-022 (Order 92-06), § 296-155-48527, filed 8/10/92, effective 9/10/92. Statutory Authority: RCW 49.17.040 and 49.17.050. WSR 86-03-074 (Order 86-14), § 296-155-48527, filed 1/21/86.] Repealed by WSR 98-05-046, filed 2/13/98, effective 4/15/98. Statutory Authority: RCW 49.17.010, [49.17].040, [49.17].050 and [49.17].-060.

296-155-48529 Boom supported elevating work platforms. [Statutory Authority: Chapter 49.17 RCW. WSR 92-17-022 (Order 92-06), § 296-155-48529, filed 8/10/92, effective 9/10/92; WSR 91-03-044 (Order 90-18), § 296-155-48529, filed 1/10/91, effective 2/12/91; WSR 89-11-035 (Order 89-03), § 296-155-48529, filed 5/15/89, effective 6/30/89. Statutory Authority: RCW 49.17.040 and 49.17.050. WSR 86-03-074 (Order 86-14), § 296-155-48529, filed 1/21/86.] Repealed by WSR 98-05-046, filed 2/13/98, effective 4/15/98. Statutory Authority: RCW 49.17.010, [49.17].040, [49.17].050 and [49.17].-060.

296-155-48531 Vehicle mounted elevating and rotating aerial devices. [Statutory Authority: Chapter 49.17 RCW. WSR 95-10-016, § 296-155-48531, filed 4/25/95, effective 10/1/95; WSR 94-15-096 (Order 94-07), § 296-155-48531, filed 7/20/94, effective 9/20/94; WSR 92-17-022 (Order 92-06), § 296-155-48531, filed 8/10/92, effective 9/10/92; WSR 91-03-044 (Order 90-18), § 296-155-48531, filed 1/10/91, effective 2/12/91; WSR 90-17-051 (Order 90-10), § 296-155-48531, filed 8/13/90, effective 9/24/90. Statutory Authority: RCW 49.17.040 and 49.17.050. WSR 86-03-074 (Order 86 -14), § 296-155-48531, filed 1/21/86.] Repealed by WSR 98-05-046, filed 2/13/98, effective 4/15/98. Statutory Authority: RCW 49.17.010, [49.17].040, [49.17].050 and [49.17].060.

296-155-48533 Crane or derrick suspended personnel platforms. [Statutory Authority: RCW 49.17.040, [49.17.]050 and [49.17.]060. WSR 96-24-051, § 296-155-48533, filed 11/27/96, effective 2/1/97. Statutory Authority: Chapter 49.17 RCW. WSR 95-10-016, § 296-155-48533, filed 4/25/95, effective 10/1/95; WSR 94-15-096 (Order 94-07), § 296-155-48533, filed 7/20/94, effective 9/20/94; WSR 91-03-044 (Order 90-18), § 296-155-48533, filed 1/10/91, effective 2/12/91; WSR 90-03-029 (Order 89-20), § 296-155-48533, filed 1/11/90, effective 2/26/90; WSR 89-11-035 (Order 89-03), § 296-155-48533, filed 5/15/89, effective 6/30/89. Statutory Authority: RCW 49.17.040 and 49.17.050. WSR 86-03-074 (Order 86-14), § 296-155-48533, filed 1/21/86.] Repealed by WSR 98-05-046, filed 2/13/98, effective 4/15/98. Statutory Authority: RCW 49.17.010, [49.17].040, [49.17].050 and [49.17].060.

296-155-48536 Forklift elevated work platforms. [Statutory Authority: Chapter 49.17 RCW and RCW 49.17.040, [49.17].050 and [49.17].060. WSR 92-22-067 (Order 92-06), § 296-155-48536, filed 10/30/92, effective 12/8/92. Statutory Authority: Chapter 49.17 RCW. WSR 89-11-035 (Order 89-03), § 296-155-48536, filed 5/15/89, effective 6/30/89.] Repealed by WSR 98-05-046, filed 2/13/98, effective 4/15/98. Statutory Authority: RCW 49.17.010, [49.17].040, [49.17].050 and [49.17].060.

296-155-487 Manually propelled elevating work platforms. [Statutory Authority: RCW 49.17.010, 49.17.040, 49.17.050, and 49.17.060. WSR 04-14-028, § 296-155-487, filed 6/29/04, effective 1/1/05; WSR 98-05-046, § 296-155-487, filed 2/13/98, effective 4/15/98.] Repealed by WSR 06-19-073, filed 9/19/06, effective 1/1/07. Statutory Authority: RCW 49.17.010, 49.17.040, 49.17.050, 49.17.060.

296-155-488 Self propelled elevating work platforms. [Statutory Authority: RCW 49.17.010, 49.17.040, 49.17.050, and 49.17.060. WSR 04-14-028, § 296-155-488, filed 6/29/04, effective 1/1/05; WSR 98-05-046, § 296-155-488, filed 2/13/98, effective 4/15/98.] Repealed by WSR 06-19-073, filed 9/19/06, effective 1/1/07. Statutory Authority: RCW 49.17.010, 49.17.040, 49.17.050, 49.17.060.

296-155-489 Boom supported elevating work platforms. [Statutory Authority: RCW 49.17.010, [49.17].040, [49.17].050 and [49.17].060. WSR 98-05-046, § 296-155-489, filed 2/13/98, effective 4/15/98.] Repealed by WSR 06-19-073, filed 9/19/06, effective 1/1/07. Statutory Authority: RCW 49.17.010, 49.17.040, 49.17.050, 49.17.060.

296-155-490 Aerial lifts. [Statutory Authority: RCW 49.17.010, [49.17].040, [49.17].050 and [49.17].060. WSR 98-05-046, § 296-155-490, filed 2/13/98, effective 4/15/98.] Repealed by WSR 06-19-073, filed 9/19/06, effective 1/1/07. Statutory Authority: RCW 49.17.010, 49.17.-040, 49.17.050, 49.17.060.

296-155-493 Training. [Statutory Authority: RCW 49.17.010, [49.17].040, [49.17].050 and [49.17].060. WSR 98-05-

046, § 296-155-493, filed 2/13/98, effective 4/15/98.] Repealed by WSR 05-01-054, filed 12/7/04, effective 3/1/05. Statutory Authority: RCW 49.17.010, 49.17.-040, 49.17.050, 49.17.060.

296-155-494 Non-Mandatory Appendix A to Part J-1, Scaffold Specifications. [Statutory Authority: RCW 49.17.010, [49.17].040, [49.17].050 and [49.17].060. WSR 98-05-046, § 296-155-494, filed 2/13/98, effective 4/15/98.] Repealed by WSR 05-01-054, filed 12/7/04, effective 3/1/05. Statutory Authority: RCW 49.17.010, 49.17.-040, 49.17.050, 49.17.060.

296-155-496 Non-Mandatory Appendix C to Part J-1, List of National Consensus Standards. [Statutory Authority: RCW 49.17.010, [49.17].040, [49.17].050 and [49.17].-060. WSR 98-05-046, § 296-155-496, filed 2/13/98, effective 4/15/98.] Repealed by WSR 06-19-073, filed 9/19/06, effective 1/1/07. Statutory Authority: RCW 49.17.010, 49.17.040, 49.17.050, 49.17.060.

296-155-497 Non-Mandatory Appendix D to Part J-1, List of Training Topics for Scaffold Erectors and Dismantlers. [Statutory Authority: RCW 49.17.010, [49.17].040, [49.17].-050 and [49.17].060. WSR 98-05-046, § 296-155-497, filed 2/13/98, effective 4/15/98.] Repealed by WSR 05-01-054, filed 12/7/04, effective 3/1/05. Statutory Authority: RCW 49.17.010, 49.17.040, 49.17.050, 49.17.060.

296-155-498 Non-Mandatory Appendix E to Part J-1, Drawings and Illustrations. [Statutory Authority: RCW 49.17.010, [49.17].040, [49.17].050 and [49.17].060. WSR 98-05-046, § 296-155-498, filed 2/13/98, effective 4/15/98.] Repealed by WSR 05-01-054, filed 12/7/04, effective 3/1/05. Statutory Authority: RCW 49.17.010, 49.17.-040, 49.17.050, 49.17.060.

296-155-500 Definitions applicable to this part. [Statutory Authority: RCW 49.17.040, [49.17.]050 and [49.17.]060. WSR 96-24-051, § 296-155-500, filed 11/27/96, effective 2/1/97. Statutory Authority: Chapter 49.17 RCW. WSR 95-10-016, § 296-155-500, filed 4/25/95, effective 10/1/95; WSR 91-24-017 (Order 91-07), § 296-155-500, filed 11/22/91, effective 12/24/91; WSR 91-03-044 (Order 90-18), § 296-155-500, filed 1/10/91, effective 2/12/91. Statutory Authority: RCW 49.17.040 and 49.17.050. WSR 86-03-074 (Order 86-14), § 296-155-500, filed 1/21/86. Statutory Authority: RCW 49.17.040, 49.17.-050 and 49.17.240. WSR 81-13-053 (Order 81-9), § 296-155-500, filed 6/17/81; Order 74-26, § 296-155-500, filed 5/7/74, effective 6/6/74.] Repealed by WSR 13-04-073, filed 2/4/13, effective 4/1/13. Statutory Authority: RCW 49.17.010, 49.17.040, 49.17.050, 49.17.060 and 29 C.F.R. 1926, Subpart M, Fall Protection. Later promulgation, see WAC 296-155-24601 through 296-155-24624.

296-155-505 Guardrails, handrails and covers. [Statutory Authority: RCW 49.17.010, [49.17].040, and [49.17].050. WSR 00-14-058, § 296-155-505, filed 7/3/00, effective 10/1/00. Statutory Authority: RCW 49.17.040, [49.17.]050 and [49.17.]060. WSR 96-24-051, § 296-155-505, filed 11/27/96, effective 2/1/97. Statutory Authority: Chapter 49.17 RCW. WSR 95-10-016, § 296-155-505, filed 4/25/95, effective 10/1/95; WSR 94-15-096 (Order 94-07), § 296-155-505, filed 7/20/94, effective 9/20/94; WSR 91-24-017 (Order 91-07), § 296-155-505, filed 11/22/91, effective 12/24/91; WSR 91-03-044 (Order 90-18), § 296-155-505, filed 1/10/91, effective 2/12/91; WSR 90-03-029 (Order 89-20), § 296-155-505, filed 1/11/90, effective 2/26/90. Statutory Authority: RCW 49.17.040 and 49.17.050. WSR 86-03-074 (Order 86-14), § 296-155-505, filed 1/21/86. Statutory Authority: RCW 49.17.040, 49.17.050 and 49.17.240. WSR 81-13-053 (Order 81-9), § 296-155-505, filed 6/17/81; Order 76-29, § 296-155-505, filed 9/30/76; Order 74-26, § 296-155-505, filed 5/7/74, effective 6/6/74.] Repealed by WSR 13-04-073, filed 2/4/13, effective 4/1/13. Statutory Authority: RCW 49.17.010, 49.17.040, 49.17.050, 49.17.060 and 29 C.F.R. 1926, Subpart M, Fall Protection. Later promulgation, see WAC 296-155-24601 through 296-155-24624.

296-155-50501 Appendix—Roofs. [Statutory Authority: RCW 49.17.-040, 49.17.050 and 49.17.240. WSR 81-13-053 (Order 81-9), § 296-155-50501, filed 6/17/81.] Repealed by WSR 91-03-044 (Order 90-18), filed 1/10/91, effective 2/12/91. Statutory Authority: Chapter 49.17 RCW.

296-155-50503 Roofing brackets. [Statutory Authority: RCW 49.17.-040, [49.17.]050 and [49.17.]060. WSR 96-24-051, § 296-155-50503, filed 11/27/96, effective 2/1/97. Statutory Authority: Chapter 49.17 RCW. WSR 95-10-016, § 296-155-50503, filed 4/25/95, effective 10/1/95; WSR 91-03-044 (Order 90-18), § 296-155-50503, filed 1/10/91, effective 2/12/91. Statutory Authority: RCW 49.17.040 and 49.17.050. WSR 86-03-074 (Order 86-14), § 296-155-50503, filed 1/21/86.] Repealed by WSR 13-04-073, filed 2/4/13, effective 4/1/13. Statutory Authority: RCW 49.17.010, 49.17.040, 49.17.050, 49.17.060 and 29 C.F.R. 1926, Subpart M, Fall Protection. Later promulgation, see WAC 296-155-24601 through 296-155-24624.

296-155-50505 Reserved. [Statutory Authority: Chapter 49.17 RCW. WSR 94-15-096 (Order 94-07), § 296-155-50505, filed 7/20/94, effective 9/20/94; WSR 91-24-017 (Order 91-07), § 296-155-50505, filed 11/22/91, effective 12/24/91. Statutory Authority: RCW 49.17.040 and 49.17.050. WSR 86-03-074 (Order 86-14), § 296-155-50505, filed 1/21/86.] Repealed by WSR 13-04-073, filed 2/4/13, effective 4/1/13. Statutory Authority: RCW 49.17.010, 49.17.040, 49.17.050, 49.17.060 and 29 C.F.R. 1926, Subpart M, Fall Protection. Later promulgation, see WAC 296-155-24601 through 296-155-24624.

296-155-510 Reserved. [Statutory Authority: Chapter 49.17 RCW. WSR 91-24-017 (Order 91-07), § 296-155-510, filed 11/22/91, effective 12/24/91; WSR 89-11-035 (Order 89-03), § 296-155-510, filed 5/15/89, effective 6/30/89. Statutory Authority: RCW 49.17.040 and 49.17.050. WSR 86-03-074 (Order 86-14), § 296-155-510, filed 1/21/86; Order 74-26, § 296-155-510, filed 5/7/74, effective 6/6/74.] Repealed by WSR 13-04-073, filed 2/4/13, effective 4/1/13. Statutory Authority: RCW 49.17.010, 49.17.040, 49.17.050, 49.17.060 and 29 C.F.R. 1926, Subpart M, Fall Protection. Later promulgation, see WAC 296-155-24601 through 296-155-24624.

296-155-515 Ramps, runways, and inclined walkways. [Statutory Authority: RCW 49.17.040, [49.17.]050 and [49.17.]-060. WSR 96-24-051, § 296-155-515, filed 11/27/96, effective 2/1/97. Statutory Authority: Chapter 49.17 RCW. WSR 95-10-016, § 296-155-515, filed 4/25/95, effective 10/1/95. Statutory Authority: RCW 49.17.040 and 49.17.050. WSR 86-03-074 (Order 86-14), § 296-155-515, filed 1/21/86.] Repealed by WSR 13-04-073, filed 2/4/13, effective 4/1/13. Statutory Authority: RCW 49.17.010, 49.17.040, 49.17.050, 49.17.060 and 29 C.F.R. 1926, Subpart M, Fall Protection. Later promulgation, see WAC 296-155-24601 through 296-155-24624.

296-155-525 Cranes and derricks. [Statutory Authority: RCW 49.17.-010, 49.17.040, 49.17.050, 49.17.060. WSR 05-20-055, § 296-155-525, filed 10/3/05, effective 12/1/05; WSR 05-03-093, § 296-155-525, filed 1/18/05, effective 3/1/05; WSR 04-14-028, § 296-155-525, filed 6/29/04, effective 1/1/05. Statutory Authority: RCW 49.17.010, [49.17].040, [49.17].050. WSR 02-12-098, § 296-155-525, filed 6/5/02, effective 8/1/02; WSR 01-17-033, § 296-155-525, filed 8/8/01, effective 9/1/01. Statutory Authority: RCW 49.17.040, [49.17].050 and [49.17].-060. WSR 95-17-036, § 296-155-525, filed 8/9/95, effective 9/25/95. Statutory Authority: Chapter 49.17 RCW. WSR 91-03-044 (Order 90-18), § 296-155-525, filed 1/10/91, effective 2/12/91; Order 76-29, § 296-155-525, filed 9/30/76; Order 74-26, § 296-155-525, filed 5/7/74, effective 6/6/74.] Repealed by WSR 12-01-086, filed 12/20/11, effective 2/1/12. Statutory Authority: RCW 49.17.010, 49.17.040, 49.17.050, 49.17.440, 49.17.060, and 29 C.F.R. 1926, Subpart CC.

296-155-526 Crane attached personnel platforms. [Statutory Authority: RCW 49.17.010, [49.17.]040 and [49.17.]050. WSR 00-15-028, § 296-155-526, filed 7/12/00, effective 10/1/00.] Repealed by WSR 12-09-058, filed 4/17/12, effective 5/18/12. Statutory Authority: RCW 49.17.010, 49.17.040, 49.17.050, 49.17.060, and chapter 49.17 RCW. Later promulgation, see WAC 296-155-547 through 296-155-55405.

296-155-527 Appendix A to WAC 296-155-525. [Statutory Authority: RCW 49.17.040, [49.17.]050 and [49.17.]060. WSR 97-11-055, § 296-155-527, filed 5/20/97, effective 8/1/97; WSR 95-17-036, § 296-155-527, filed 8/9/95, effective 9/25/95.] Repealed by WSR 12-01-086, filed

12/20/11, effective 2/1/12. Statutory Authority: RCW 49.17.010, 49.17.040, 49.17.050, 49.17.440, 49.17.060, and 29 C.F.R. 1926, Subpart CC.

296-155-528 Crane or derrick suspended personnel platforms. [Statutory Authority: RCW 49.17.010, [49.17].040, [49.17].-050 and [49.17].060. WSR 98-05-046, § 296-155-528, filed 2/13/98, effective 4/15/98.] Repealed by WSR 12-09-058, filed 4/17/12, effective 5/18/12. Statutory Authority: RCW 49.17.010, 49.17.040, 49.17.050, 49.17.060, and chapter 49.17 RCW. Later promulgation, see WAC 296-155-547 through 296-155-55405.

296-155-530 Material hoists, personnel hoists, and elevators. [Statutory Authority: RCW 49.17.010, [49.17].040, [49.17].-050. WSR 02-12-098, § 296-155-530, filed 6/5/02, effective 8/1/02. Statutory Authority: Chapter 49.17 RCW. WSR 94-15-096 (Order 94-07), § 296-155-530, filed 7/20/94, effective 9/20/94; WSR 91-03-044 (Order 90-18), § 296-155-530, filed 1/10/91, effective 2/12/91. Statutory Authority: RCW 49.17.040 and 49.17.050. WSR 86-03-074 (Order 86-14), § 296-155-530, filed 1/21/86; Order 74-26, § 296-155-530, filed 5/7/74, effective 6/6/74.] Repealed by WSR 12-01-086, filed 12/20/11, effective 2/1/12. Statutory Authority: RCW 49.17.010, 49.17.040, 49.17.050, 49.17.440, 49.17.060, and 29 C.F.R. 1926, Subpart CC.

296-155-535 Base-mounted drum hoists. [Order 74-26, § 296-155-535, filed 5/7/74, effective 6/6/74.] Repealed by WSR 12-01-086, filed 12/20/11, effective 2/1/12. Statutory Authority: RCW 49.17.010, 49.17.040, 49.17.050, 49.17.440, 49.17.060, and 29 C.F.R. 1926, Subpart CC.

296-155-540 Overhead hoists. [Order 74-26, § 296-155-540, filed 5/7/74, effective 6/6/74.] Repealed by WSR 12-01-086, filed 12/20/11, effective 2/1/12. Statutory Authority: RCW 49.17.010, 49.17.040, 49.17.050, 49.17.440, 49.17.060, and 29 C.F.R. 1926, Subpart CC.

296-155-545 Conveyors. [Statutory Authority: RCW 49.17.010, 49.17.040, 49.17.050, 49.17.060. WSR 06-05-027, § 296-155-545, filed 2/7/06, effective 4/1/06. Statutory Authority: Chapter 49.17 RCW. WSR 94-15-096 (Order 94-07), § 296-155-545, filed 7/20/94, effective 9/20/94. Statutory Authority: RCW 49.17.040 and 49.17.050. WSR 86-03-074 (Order 86-14), § 296-155-545, filed 1/21/86; Order 74-26, § 296-155-545, filed 5/7/74, effective 6/6/74.] Repealed by WSR 12-01-086, filed 12/20/11, effective 2/1/12. Statutory Authority: RCW 49.17.010, 49.17.040, 49.17.050, 49.17.440, 49.17.060, and 29 C.F.R. 1926, Subpart CC.

296-155-550 Aerial cableways. [Order 74-26, § 296-155-550, filed 5/7/74, effective 6/6/74.] Repealed by WSR 12-01-086, filed 12/20/11, effective 2/1/12. Statutory Authority: RCW 49.17.010, 49.17.040, 49.17.050, 49.17.440, 49.17.060, and 29 C.F.R. 1926, Subpart CC.

296-155-555 Gin poles. [Order 74-26, § 296-155-555, filed 5/7/74, effective 6/6/74.] Repealed by WSR 12-01-086, filed 12/20/11, effective 2/1/12. Statutory Authority: RCW 49.17.010, 49.17.040, 49.17.050, 49.17.440, 49.17.060, and 29 C.F.R. 1926, Subpart CC.

296-155-560 Concrete bucket towers. [Order 74-26, § 296-l55-560, filed 5/7/74, effective 6/6/74.] Repealed by WSR 12-01-086, filed 12/20/11, effective 2/1/12. Statutory Authority: RCW 49.17.010, 49.17.040, 49.17.050, 49.17.440, 49.17.060, and 29 C.F.R. 1926, Subpart CC.

296-155-565 Hoisting engines. [Statutory Authority: Chapter 49.17 RCW. WSR 94-15-096 (Order 94-07), § 296-155-565, filed 7/20/94, effective 9/20/94; Order 74-26, § 296-155-565, filed 5/7/74, effective 6/6/74.] Repealed by WSR 12-01-086, filed 12/20/11, effective 2/1/12. Statutory Authority: RCW 49.17.010, 49.17.040, 49.17.050, 49.17.440, 49.17.060, and 29 C.F.R. 1926, Subpart CC.

296-155-570 Rigging—Wire rope. [Statutory Authority: RCW 49.17.040 and 49.17.050. WSR 86-03-074 (Order 86-14), § 296-155-570, filed 1/21/86; Order 74-26, § 296-155-570, filed 5/7/74, effective 6/6/74.] Repealed by WSR 12-01-086, filed 12/20/11, effective 2/1/12. Statutory Authority: RCW 49.17.010, 49.17.040, 49.17.050, 49.17.440, 49.17.060, and 29 C.F.R. 1926, Subpart CC.

296-155-575 Helicopters and helicopter cranes. [Statutory Authority: RCW 49.17.010, [49.17].040, and [49.17].050. WSR 01-17-033, § 296-155-575, filed 8/8/01, effective 9/1/01. Statutory Authority: Chapter 49.17 RCW. WSR 94-15-096 (Order 94-07), § 296-155-575, filed 7/20/94, effective 9/20/94. Statutory Authority: RCW 49.17.040 and 49.17.050. WSR 86-03-074 (Order 86-14), § 296-155-575, filed 1/21/86; Order 76-28, § 296-155-575, filed 9/28/76; Order 74-26, § 296-155-575, filed 5/7/74, effective 6/6/74.] Repealed by WSR 04-09-099, filed 4/20/04, effective 9/1/04. Statutory Authority: RCW 49.17.010, 49.17.040, 49.17.050, and 49.17.060. Later promulgation, see chapter 296-829 WAC.

296-155-576 Figure L-1. [Order 74-26, Figure L-1 (codified as WAC 296-155-576), filed 5/7/74, effective 6/6/74. Formerly WAC 296-155-575 (part).] Repealed by WSR 04-09-099, filed 4/20/04, effective 9/1/04. Statutory Authority: RCW 49.17.010, 49.17.040, 49.17.050, and 49.17.060. Later promulgation, see chapter 296-829 WAC.

296-155-580 Aerial lifts. [Statutory Authority: RCW 49.17.040 and 49.17.050. WSR 86-03-074 (Order 86-14), § 296-155-580, filed 1/21/86; Order 74-26, § 296-155-580, filed 5/7/74, effective 6/6/74.] Repealed by WSR 90-17-051 (Order 90-10), filed 8/13/90, effective 9/24/90. Statutory Authority: Chapter 49.17 RCW.

296-155-59901 Table 1. [Order 74-26, § 296-155-580 (part), Table 1 (codified as WAC 296-155-59901), filed 5/7/74, effective 6/6/74.] Repealed by WSR 12-01-086, filed 12/20/11, effective 2/1/12. Statutory Authority: RCW 49.17.010, 49.17.040, 49.17.050, 49.17.440, 49.17.060, and 29 C.F.R. 1926, Subpart CC.

296-155-59902 Table 2. [Order 74-26, § 296-155-580 (part), Table 2 (codified as WAC 296-155-59902), filed 5/7/74, effective 6/6/74.] Repealed by WSR 12-01-086, filed 12/20/11, effective 2/1/12. Statutory Authority: RCW 49.17.010, 49.17.040, 49.17.050, 49.17.440, 49.17.060, and 29 C.F.R. 1926, Subpart CC.

296-155-59903 Table 3. [Order 74-26, § 296-155-580 (part), Table 3 (codified as WAC 296-155-59903), filed 5/7/74, effective 6/6/74.] Repealed by WSR 12-01-086, filed 12/20/11, effective 2/1/12. Statutory Authority: RCW 49.17.010, 49.17.040, 49.17.050, 49.17.440, 49.17.060, and 29 C.F.R. 1926, Subpart CC.

296-155-59904 Table 4. [Statutory Authority: Chapter 49.17 RCW. WSR 91-24-017 (Order 91-07), § 296-155-59904, filed 11/22/91, effective 12/24/91; Order 74-26, § 296-155-580 (part), Table 4 (codified as WAC 296-155-59904), filed 5/7/74, effective 6/6/74.] Repealed by WSR 12-01-086, filed 12/20/11, effective 2/1/12. Statutory Authority: RCW 49.17.010, 49.17.040, 49.17.050, 49.17.440, 49.17.060, and 29 C.F.R. 1926, Subpart CC.

296-155-59905 Table 5. [Order 74-26, § 296-155-580 (part), Table 5 (codified as WAC 296-155-59905), filed 5/7/74, effective 6/6/74.] Repealed by WSR 12-01-086, filed 12/20/11, effective 2/1/12. Statutory Authority: RCW 49.17.010, 49.17.040, 49.17.050, 49.17.440, 49.17.060, and 29 C.F.R. 1926, Subpart CC.

296-155-59906 Table 6. [Order 74-26, § 296-155-580 (part), Table 6 (codified as WAC 296-155-59906), filed 5/7/74, effective 6/6/74.] Repealed by WSR 12-01-086, filed 12/20/11, effective 2/1/12. Statutory Authority: RCW 49.17.010, 49.17.040, 49.17.050, 49.17.440, 49.17.060, and 29 C.F.R. 1926, Subpart CC.

296-155-59907 Table 7. [Order 74-26, § 296-155-580 (part), Table 7 (codified as WAC 296-155-59907), filed 5/7/74, effective 6/6/74.] Repealed by WSR 12-01-086, filed 12/20/11, effective 2/1/12. Statutory Authority: RCW 49.17.010, 49.17.040, 49.17.050, 49.17.440, 49.17.060, and 29 C.F.R. 1926, Subpart CC.

296-155-59908 Table 8. [Order 74-26, § 296-155-580 (part), Table 8 (codified as WAC 296-155-59908), filed 5/7/74, effective 6/6/74.] Repealed by WSR 12-01-086, filed 12/20/11, effective 2/1/12. Statutory Authority: RCW 49.17.010, 49.17.040, 49.17.050, 49.17.440, 49.17.060, and 29 C.F.R. 1926, Subpart CC.

296-155-59909 Table 9. [Order 74-26, § 296-155-580 (part), Table 9 (codified as WAC 296-155-59909), filed 5/7/74, effective 6/6/74.] Repealed by WSR 12-01-086, filed 12/20/11, effective 2/1/12. Statutory Authority: RCW 49.17.010, 49.17.040, 49.17.050, 49.17.440, 49.17.060, and 29 C.F.R. 1926, Subpart CC.

296-155-59910 Table 10. [Order 74-26, § 296-155-580 (part), Table 10 (codified as WAC 296-155-59910), filed 5/7/74, effective 6/6/74.] Repealed by WSR 12-01-086, filed 12/20/11, effective 2/1/12. Statutory Authority: RCW 49.17.010, 49.17.040, 49.17.050, 49.17.440, 49.17.060, and 29 C.F.R. 1926, Subpart CC.

296-155-59911 Table 11. [Order 74-26, § 296-155-580 (part), Table 11 (codified as WAC 296-155-59911), filed 5/7/74, effective 6/6/74.] Repealed by WSR 12-01-086, filed 12/20/11, effective 2/1/12. Statutory Authority: RCW

49.17.010, 49.17.040, 49.17.050, 49.17.440, 49.17.060, and 29 C.F.R. 1926, Subpart CC.

296-155-59912 Table 12. [Order 74-26, § 296-155-580 (part), Table 12 (codified as WAC 296-155-59912), filed 5/7/74, effective 6/6/74.] Repealed by WSR 12-01-086, filed 12/20/11, effective 2/1/12. Statutory Authority: RCW 49.17.010, 49.17.040, 49.17.050, 49.17.440, 49.17.060, and 29 C.F.R. 1926, Subpart CC.

296-155-59913 Table 13. [Order 74-26, § 296-155-580 (part), Table 13 (codified as WAC 296-155-59913), filed 5/7/74, effective 6/6/74.] Repealed by WSR 12-01-086, filed 12/20/11, effective 2/1/12. Statutory Authority: RCW 49.17.010, 49.17.040, 49.17.050, 49.17.440, 49.17.060, and 29 C.F.R. 1926, Subpart CC.

296-155-59914 Table 14. [Order 74-26, § 296-155-580 (part), Table 14 (codified as WAC 296-155-59914), filed 5/7/74, effective 6/6/74.] Repealed by WSR 12-01-086, filed 12/20/11, effective 2/1/12. Statutory Authority: RCW 49.17.010, 49.17.040, 49.17.050, 49.17.440, 49.17.060, and 29 C.F.R. 1926, Subpart CC.

296-155-59915 Table 15. [Order 74-26, § 296-155-580 (part), Table 15 (codified as WAC 296-155-59915), filed 5/7/74, effective 6/6/74.] Repealed by WSR 12-01-086, filed 12/20/11, effective 2/1/12. Statutory Authority: RCW 49.17.010, 49.17.040, 49.17.050, 49.17.440, 49.17.060, and 29 C.F.R. 1926, Subpart CC.

296-155-59916 Table 16. [Order 74-26, § 296-155-580 (part), Table 16 (codified as WAC 296-155-59916), filed 5/7/74, effective 6/6/74.] Repealed by WSR 12-01-086, filed 12/20/11, effective 2/1/12. Statutory Authority: RCW 49.17.010, 49.17.040, 49.17.050, 49.17.440, 49.17.060, and 29 C.F.R. 1926, Subpart CC.

296-155-59917 Table 17. [Order 74-26, § 296-155-580 (part), Table 17 (codified as WAC 296-155-59917), filed 5/7/74, effective 6/6/74.] Repealed by WSR 12-01-086, filed 12/20/11, effective 2/1/12. Statutory Authority: RCW 49.17.010, 49.17.040, 49.17.050, 49.17.440, 49.17.060, and 29 C.F.R. 1926, Subpart CC.

296-155-59918 Table 18. [Order 74-26, § 296-155-580 (part), Table 18 (codified as WAC 296-155-59918), filed 5/7/74, effective 6/6/74.] Repealed by WSR 12-01-086, filed 12/20/11, effective 2/1/12. Statutory Authority: RCW 49.17.010, 49.17.040, 49.17.050, 49.17.440, 49.17.060, and 29 C.F.R. 1926, Subpart CC.

296-155-59919 Table 19. [Order 74-26, § 296-155-580 (part), Table 19 (codified as WAC 296-155-59919), filed 5/7/74, effective 6/6/74.] Repealed by WSR 12-01-086, filed 12/20/11, effective 2/1/12. Statutory Authority: RCW 49.17.010, 49.17.040, 49.17.050, 49.17.440, 49.17.060, and 29 C.F.R. 1926, Subpart CC.

296-155-59920 Table 20. [Order 74-26, § 296-155-580 (part), Table 20 (codified as WAC 296-155-59920), filed 5/7/74, effective 6/6/74.] Repealed by WSR 12-01-086, filed 12/20/11, effective 2/1/12. Statutory Authority: RCW 49.17.010, 49.17.040, 49.17.050, 49.17.440, 49.17.060, and 29 C.F.R. 1926, Subpart CC.

296-155-617 Servicing multipiece and single-piece rim wheels. [Statutory Authority: RCW 49.17.040 and 49.17.050. WSR 86-03-074 (Order 86-14), § 296-155-617, filed 1/21/86.] Repealed by WSR 04-20-079, filed 10/5/04, effective 2/1/05. Statutory Authority: RCW 49.17.010, 49.17.040, 49.17.050, 49.17.060. Later promulgation, see chapter 296-864 WAC.

296-155-61701 Scope. [Statutory Authority: RCW 49.17.040 and 49.17.050. WSR 86-03-074 (Order 86-14), § 296-155-61701, filed 1/21/86.] Repealed by WSR 04-20-079, filed 10/5/04, effective 2/1/05. Statutory Authority: RCW 49.17.010, 49.17.040, 49.17.050, 49.17.060. Later promulgation, see chapter 296-864 WAC.

296-155-61703 Definitions. [Statutory Authority: RCW 49.17.040 and 49.17.050. WSR 86-03-074 (Order 86-14), § 296-155-61703, filed 1/21/86.] Repealed by WSR 04-20-079, filed 10/5/04, effective 2/1/05. Statutory Authority: RCW 49.17.010, 49.17.040, 49.17.050, 49.17.060. Later promulgation, see chapter 296-864 WAC.

296-155-61705 Employee training. [Statutory Authority: Chapter 49.17 RCW. WSR 94-15-096 (Order 94-07), § 296-155-61705, filed 7/20/94, effective 9/20/94. Statutory Authority: RCW 49.17.040 and 49.17.050. WSR 86-03-074 (Order 86-14), § 296-155-61705, filed 1/21/86.] Repealed by WSR 04-20-079, filed 10/5/04, effective 2/1/05. Statutory Authority: RCW 49.17.010, 49.17.-040, 49.17.050, 49.17.060. Later promulgation, see chapter 296-864 WAC.

296-155-61707 Tire servicing equipment. [Statutory Authority: RCW 49.17.040 and 49.17.050. WSR 86-03-074 (Order 86-14), § 296-155-61707, filed 1/21/86.] Repealed by WSR 04-20-079, filed 10/5/04, effective 2/1/05. Statutory Authority: RCW 49.17.010, 49.17.040, 49.17.050, 49.17.060. Later promulgation, see chapter 296-864 WAC.

296-155-61709 Wheel component acceptability. [Statutory Authority: RCW 49.17.040 and 49.17.050. WSR 86-03-074 (Order 86-14), § 296-155-61709, filed 1/21/86.] Repealed by WSR 04-20-079, filed 10/5/04, effective 2/1/05. Statutory Authority: RCW 49.17.010, 49.17.040, 49.17.050, 49.17.060. Later promulgation, see chapter 296-864 WAC.

296-155-61711 Safe operating procedure—Multipiece rim wheels. [Statutory Authority: Chapter 49.17 RCW. WSR 94-15-096 (Order 94-07), § 296-155-61711, filed 7/20/94, effective 9/20/94. Statutory Authority: RCW 49.17.040 and 49.17.050. WSR 86-03-074 (Order 86-14), § 296-155-61711, filed 1/21/86.] Repealed by WSR 04-20-079, filed 10/5/04, effective 2/1/05. Statutory Authority: RCW 49.17.010, 49.17.040, 49.17.050, 49.17.060. Later promulgation, see chapter 296-864 WAC.

296-155-61713 Safe operating procedure—Single-piece rim wheels. [Statutory Authority: Chapter 49.17 RCW. WSR 94-15-096 (Order 94-07), § 296-155-61713, filed 7/20/94, effective 9/20/94. Statutory Authority: RCW 49.17.040 and 49.17.050. WSR 86-03-074 (Order 86-14), § 296-155-61713, filed 1/21/86.] Repealed by WSR 04-20-079, filed 10/5/04, effective 2/1/05. Statutory Authority: RCW 49.17.010, 49.17.040, 49.17.050, 49.17.060. Later promulgation, see chapter 296-864 WAC.

296-155-65505 Sewage piping system. [Statutory Authority: RCW 49.17.040 and 49.17.050. WSR 86-03-074 (Order 86-14), § 296-155-65505, filed 1/21/86.] Repealed by WSR 91-03-044 (Order 90-18), filed 1/10/91, effective 2/12/91. Statutory Authority: Chapter 49.17 RCW.

296-155-660 Specific excavation requirements. [Statutory Authority: RCW 49.17.040 and 49.17.050. WSR 86-03-074 (Order 86-14), § 296-155-660, filed 1/21/86. Statutory Authority: RCW 49.17.040, 49.17.050 and 49.17.240. WSR 81-13-053 (Order 81-9), § 296-155-660, filed 6/17/81; Order 76-29, § 296-155-660, filed 9/30/76; Order 74-26, § 296-155-660, filed 5/7/74, effective 6/6/74.] Repealed by WSR 91-03-044 (Order 90-18), filed 1/10/91, effective 2/12/91. Statutory Authority: Chapter 49.17 RCW.

296-155-66005 Borrow pits. [Statutory Authority: RCW 49.17.040 and 49.17.050. WSR 86-03-074 (Order 86-14), § 296-155-66005, filed 1/21/86.] Repealed by WSR 91-03-044 (Order 90-18), filed 1/10/91, effective 2/12/91. Statutory Authority: Chapter 49.17 RCW.

296-155-665 Specific trenching requirements. [Statutory Authority: RCW 49.17.040 and 49.17.050. WSR 86-03-074 (Order 86-14), § 296-155-665, filed 1/21/86; WSR 85-10-004 (Order 85-09), § 296-155-665, filed 4/19/85. Statutory Authority: RCW 49.17.040, 49.17.050 and 49.17.240. WSR 81-13-053 (Order 81-9), § 296-155-665, filed 6/17/81; Order 77-12, § 296-155-665, filed 7/11/77; Order 76-29, § 296-155-665, filed 9/30/76; Order 74-26, § 296-155-665, filed 5/7/74, effective 6/6/74.] Repealed by WSR 91-03-044 (Order 90-18), filed 1/10/91, effective 2/12/91. Statutory Authority: Chapter 49.17 RCW.

296-155-66501 Table N-1. [Statutory Authority: RCW 49.17.040 and 49.17.050. WSR 86-03-074 (Order 86-14), § 296-155-66501, filed 1/21/86; 82 -13-045 (Order 82-22), § 296-155-66501, filed 6/11/82; Order 76-29, Table N-1 (codified as WAC 296-155-66501), filed 9/30/76; Order 74-26, § 296-155-665 (part), Table N-1, filed 5/7/74, effective 6/6/74.] Repealed by WSR 91-03-044 (Order 90-18), filed 1/10/91, effective 2/12/91. Statutory Authority: Chapter 49.17 RCW.

296-155-66502 Table N-2. [Statutory Authority: RCW 49.17.040 and 49.17.050. WSR 86-03-074 (Order 86-14), § 296-155-66502, filed 1/21/86; Order 76-29, Table N-2 (codified as WAC 296-155-66502), filed 9/30/76; Order 74-26, § 296-155-665 (part), Table N-2, filed 5/7/74, effective 6/6/74.] Repealed by WSR 91-03-044 (Order 90-18), filed 1/10/91, effective 2/12/91. Statutory Authority: Chapter 49.17 RCW.

296-155-66503 Table N-3. [Order 76-29, Table N-3 (codified as WAC 296-155-66503), filed 9/30/76; Order 74-26, § 296-155-665 (part), Table N-3, filed 5/7/74, effective 6/6/74.] Repealed by WSR 91-03-044 (Order 90-18), filed

1/10/91, effective 2/12/91. Statutory Authority: Chapter 49.17 RCW.

296-155-66504 Table N-4. [Order 76-29, Table N-4 (codified as WAC 296-155-66504), filed 9/30/76; Order 74-26, § 296-155-665 (part), Table N-4, filed 5/7/74, effective 6/6/74.] Repealed by WSR 91-03-044 (Order 90-18), filed 1/10/91, effective 2/12/91. Statutory Authority: Chapter 49.17 RCW.

296-155-66505 Table N-5. [Statutory Authority: RCW 49.17.040, 49.17.050 and 49.17.240. WSR 81-13-053 (Order 81-9), § 296-155-66505, filed 6/17/81; Order 76-29, Table N-5 (codified as WAC 296-155-66505), filed 9/30/76; Order 74-26, § 296-155-665 (part), Table N-5, filed 5/7/74, effective 6/6/74.] Repealed by WSR 91-03-044 (Order 90 -18), filed 1/10/91, effective 2/12/91. Statutory Authority: Chapter 49.17 RCW.

296-155-692 Requirements for lift-slab operations. [Statutory Authority: Chapter 49.17 RCW. WSR 89-11-035 (Order 89-03), § 296-155-692, filed 5/15/89, effective 6/30/89.] Repealed by WSR 90-03-029 (Order 89-20), filed 1/11/90, effective 2/26/90. Statutory Authority: Chapter 49.17 RCW.

296-155-700 General requirements. [Statutory Authority: RCW 49.17.010, [49.17].040, [49.17].050 and [49.17].060. WSR 98-05-046, § 296-155-700, filed 2/13/98, effective 4/15/98. Statutory Authority: Chapter 49.17 RCW. WSR 94-15-096 (Order 94-07), § 296-155-700, filed 7/20/94, effective 9/20/94; WSR 91-03-044 (Order 90-18), § 296-155-700, filed 1/10/91, effective 2/12/91. Statutory Authority: RCW 49.17.040 and 49.17.050. WSR 86-03-074 (Order 86-14), § 296-155-700, filed 1/21/86; Order 76-29, § 296-155-700, filed 9/30/76; Order 74-26, § 296-155-700, filed 5/7/74, effective 6/6/74.] Repealed by WSR 02-13-115, filed 6/19/02, effective 9/1/02. Statutory Authority: RCW 49.17.010, [49.17].040, and [49.17].050.

296-155-705 Flooring requirements. [Statutory Authority: Chapter 49.17 RCW. WSR 91-03-044 (Order 90-18), § 296-155-705, filed 1/10/91, effective 2/12/91. Statutory Authority: RCW 49.17.040 and 49.17.050. WSR 86-03-074 (Order 86-14), § 296-155-705, filed 1/21/86; Order 76-29, § 296-155-705, filed 9/30/76; Order 74-26, § 296-155-705, filed 5/7/74, effective 6/6/74.] Repealed by WSR 02-13-115, filed 6/19/02, effective 9/1/02. Statutory Authority: RCW 49.17.010, [49.17].040, and [49.17].050.

296-155-710 Structural steel assembly. [Order 74-26, § 296-155-710, filed 5/7/74, effective 6/6/74.] Repealed by WSR 02-13-115, filed 6/19/02, effective 9/1/02. Statutory Authority: RCW 49.17.010, [49.17].040, and [49.17].050.

296-155-715 Bolting, riveting, fitting-up, and plumbing-up. [Statutory Authority: RCW 49.17.040, [49.17.]050 and [49.17.]060. WSR 96-24-051, § 296-155-715, filed 11/27/96, effective 2/1/97. Statutory Authority: Chapter 49.17 RCW. WSR 95-10-016, § 296-155-715, filed 4/25/95, effective 10/1/95; WSR 94-15-096 (Order 94-07), § 296-155-715, filed 7/20/94, effective 9/20/94; Order 76-29, § 296-155-715, filed 9/30/76; Order 74-26, § 296-155-715, filed 5/7/74, effective 6/6/74.] Repealed by WSR 02-13-115, filed 6/19/02, effective 9/1/02. Statutory Authority: RCW 49.17.010, [49.17].040, and [49.17].050.

296-155-720 Safe walking surfaces on structural members. [Statutory Authority: Chapter 49.17 RCW. WSR 91-03-044 (Order 90-18), § 296-155-720, filed 1/10/91, effective 2/12/91. Statutory Authority: RCW 49.17.040 and 49.17.050. WSR 86-03-074 (Order 86-14), § 296-155-720, filed 1/21/86; Order 74-26, § 296-155-720, filed 5/7/74, effective 6/6/74.] Repealed by WSR 02-13-115, filed 6/19/02, effective 9/1/02. Statutory Authority: RCW 49.17.010, [49.17].040, and [49.17].050.

296-155-750 Masonry construction. [Statutory Authority: RCW 49.17.040 and 49.17.050. WSR 86-03-074 (Order 86-14), § 296-155-750, filed 1/21/86; Order 74-26, § 296-155-750, filed 5/7/74, effective 6/6/74.] Repealed by WSR 89-11-035 (Order 89-03), filed 5/15/89, effective 6/30/89. Statutory Authority: Chapter 49.17 RCW.

296-155-760 Concrete finishing. [Order 74-26, § 296-155-760, filed 5/7/74, effective 6/6/74.] Repealed by WSR 86-03-074 (Order 86-14), filed 1/21/86. Statutory Authority: RCW 49.17.040 and 49.17.050.

296-155-850 Definitions applicable to this part. [Order 74-26, § 296-155-850, filed 5/7/74, effective 6/6/74.] Repealed by WSR 86-03-074 (Order 86-14), filed 1/21/86. Statutory Authority: RCW 49.17.040 and 49.17.050.

296-155-855 General provisions. [Order 74-26, § 296-155-855, filed 5/7/74, effective 6/6/74.] Repealed by WSR 86-03-074 (Order 86-14), filed 1/21/86. Statutory Authority: RCW 49.17.040 and 49.17.050.

296-155-860 Blaster qualifications. [Order 74-26, § 296-155-860, filed 5/7/74, effective 6/6/74.] Repealed by WSR 86-03-074 (Order 86-14), filed 1/21/86. Statutory Authority: RCW 49.17.040 and 49.17.050.

296-155-865 Surface transportation of explosives. [Order 74-26, § 296-155-865, filed 5/7/74, effective 6/6/74.] Repealed by WSR 86-03-074 (Order 86-14), filed 1/21/86. Statutory Authority: RCW 49.17.040 and 49.17.050.

296-155-870 Underground transportation of explosives. [Order 74-26, § 296-155-870, filed 5/7/74, effective 6/6/74.] Repealed by WSR 86-03-074 (Order 86-14), filed 1/21/86. Statutory Authority: RCW 49.17.040 and 49.17.050.

296-155-875 Storage of explosives and blasting agents. [Order 74-26, § 296-155-875, filed 5/7/74, effective 6/6/74.] Repealed by WSR 86-03-074 (Order 86-14), filed 1/21/86. Statutory Authority: RCW 49.17.040 and 49.17.050.

296-155-880 Loading of explosives or blasting agents. [Order 74-26, § 296-155-880, filed 5/7/74, effective 6/6/74.] Repealed by WSR 86-03-074 (Order 86-14), filed 1/21/86. Statutory Authority: RCW 49.17.040 and 49.17.050.

296-155-885 Initiation of explosive charges—Electric blasting. [Order 74-26, § 296-155-885, filed 5/7/74, effective 6/6/74.] Repealed by WSR 86-03-074 (Order 86-14), filed 1/21/86. Statutory Authority: RCW 49.17.040 and 49.17.050.

296-155-890 Use of safety fuse. [Order 76-29, § 296-155-890, filed 9/30/76; Order 74-26, § 296-155-890, filed 5/7/74, effective 6/6/74.] Repealed by WSR 86-03-074 (Order 86-14), filed 1/21/86. Statutory Authority: RCW 49.17.-040 and 49.17.050.

296-155-895 Use of detonating cord. [Order 74-26, § 296-155-895, filed 5/7/74, effective 6/6/74.] Repealed by WSR 86-03-074 (Order 86-14), filed 1/21/86. Statutory Authority: RCW 49.17.040 and 49.17.050.

296-155-900 Firing the blast. [Order 74-26, § 296-155-900, filed 5/7/74, effective 6/6/74.] Repealed by WSR 86-03-074 (Order 86-14), filed 1/21/86. Statutory Authority: RCW 49.17.040 and 49.17.050.

296-155-905 Inspection after blasting. [Order 74-26. § 296-155-905, filed 5/7/74, effective 6/6/74.] Repealed by WSR 86-03-074 (Order 86-14), filed 1/21/86. Statutory Authority: RCW 49.17.040 and 49.17.050.

296-155-910 Misfires. [Order 74-26, § 296-155-910, filed 5/7/74, effective 6/6/74.] Repealed by WSR 86-03-074 (Order 86-14), filed 1/21/86. Statutory Authority: RCW 49.17.040 and 49.17.050.

296-155-915 Underwater blasting. [Order 74-26, § 296-155-915, filed 5/7/74, effective 6/6/74.] Repealed by WSR 86-03-074 (Order 86-14), filed 1/21/86. Statutory Authority: RCW 49.17.040 and 49.17.050.

296-155-920 Blasting in excavation work under compressed air. [Order 74-26, § 296-155-920, filed 5/7/74, effective 6/6/74.] Repealed by WSR 86-03-074 (Order 86-14), filed 1/21/86. Statutory Authority: RCW 49.17.040 and 49.17.050.

Reviser's note: Order 74-26, filed May 7, 1974, both repealed chapter 296-40 WAC, entitled "Safety Standards—Construction Work," and adopted this new chapter as a replacement. The effective date of this order is June 6, 1974.

PART A

GENERAL SAFETY AND HEALTH PROVISIONS

WAC 296-155-001 Foreword. (1) This chapter has been compiled with the purpose of consolidating safety and health construction safety standards into one chapter of the Washington Administrative Code, by the promulgation of the standards contained herein. It is also the intent that the safety standards of the Washington state department of labor and industries, will be at least as effective as those adopted by the U.S. Department of Labor and administered by the Occupa-

tional Safety and Health Administration as published in the Code of Federal Regulations. The department of labor and industries is incorporating many of the preexisting construction safety standards and adding new standards under this chapter.

(2) Attention is called to the fact that certain Washington state standards contain standards and/or regulations applicable to all industries. These include, but are not limited to: The code for boilers and pressure vessels; the code for pressure piping; the general industrial safety and health standards; the general occupational health standards; regulations of the department of social and health services.

[Statutory Authority: Chapter 49.17 RCW. WSR 94-15-096 (Order 94-07), § 296-155-001, filed 7/20/94, effective 9/20/94; Order 76-29, § 296-155-001, filed 9/30/76; Order 74-26, § 296-155-001, filed 5/7/74, effective 6/6/74.]

WAC 296-155-003 Subsections, subdivisions, items, subitems, and segments. (1) That portion of section numeration appearing after the chapter designation appears in either a three digit or a five digit format (e.g. WAC 296-24-330 and 296-24-30002). The final two digits of the section number are implied decimal extensions of the first three digits and represent a further division of the three digit enumeration.

(2) Sections of this chapter may be divided into subsections (1), (2), (3), etc., which may in turn be divided into subdivisions (a), (b), (c), etc., which may be further divided into items (i), (ii), (iii), etc., which may be further divided into subitems (A), (B), (C), etc., which may be further divided into segments (aa) [(I)], (bb) [(II)], (cc) [(III)], etc., all according to the following hierarchy, e.g.

Sections	296-24-330 and 296-24-33002
Subsections	(1) (2)
Subdivisions	(a) (b)
Items	(i) (ii)
Subitems	(A) (B)
Segments	I II

Note: "Part" as used in this standard means a major division of this chapter relating to a specific topic or topics and containing various related sections.

[Statutory Authority: RCW 49.17.040 and 49.17.050. WSR 86-03-074 (Order 86-14), § 296-155-003, filed 1/21/86; Order 74-26, § 296-155-003, filed 5/7/74, effective 6/6/74.]

WAC 296-155-005 Purpose and scope. (1) The standards included in this chapter apply throughout the state of Washington, to any and all work places subject to the Washington Industrial Safety and Health Act (chapter 49.17 RCW), where construction, alteration, demolition, related inspection, and/or maintenance and repair work, including painting and decorating, is performed. These standards are minimum safety requirements with which all industries must comply when engaged in the above listed types of work.

(2) If a provision of this chapter conflicts with a provision of the general safety and health standard (chapter 296-24 WAC), the general occupational health standard (chapter 296-62 WAC), or the safety and health core rules (chapter 296-800 WAC), the provision of this chapter shall prevail. When a provision of this chapter conflicts with a provision of another vertical safety standard applying to the place of work, the provisions of the vertical standard of specific application shall prevail.

[Statutory Authority: RCW 49.17.010, [49.17].040, and [49.17].050. WSR 01-11-038, § 296-155-005, filed 5/9/01, effective 9/1/01. Statutory Authority: RCW 49.17.040 and 49.17.050. WSR 86-03-074 (Order 86-14), § 296-155-005, filed 1/21/86. Statutory Authority: RCW 49.17.040, 49.17.050, 49.17.240, chapters 42.30 and 43.22 RCW. WSR 80-17-014 (Order 80-20), § 296-155-005, filed 11/13/80; Order 76-29, § 296-155-005, filed 9/30/76; Order 74-26, § 296-155-005, filed 5/7/74, effective 6/6/74.]

WAC 296-155-006 Equipment approval by nonstate agency or organization. Whenever a provision of this chapter states that only that equipment or those processes approved by an agency or organization other than the department of labor and industries, such as the Underwriters Laboratories or the Mine Safety and Health Administration (MSHA) and the National Institute for Occupational Safety and Health (NIOSH), shall be utilized, that provision shall be construed to mean that approval of such equipment or process by the designated agency or group shall be prima facie evidence of compliance with the provisions of this chapter.

[Statutory Authority: Chapter 49.17 RCW. WSR 94-15-096 (Order 94-07), § 296-155-006, filed 7/20/94, effective 9/20/94; Order 74-26, § 296-155-006, filed 5/7/74, effective 6/6/74.]

WAC 296-155-007 Incorporation of standards of national organization. Whenever a provision of this chapter incorporates by reference a national code or portion thereof which has been adopted by and is currently administered by another state agency, compliance with those provisions adopted and administered by such other state agency, if from a more recent edition of such national code, will be deemed to be prima facie evidence of compliance with the provisions of this chapter.

[Order 74-26, § 296-155-007, filed 5/7/74, effective 6/6/74.]

WAC 296-155-008 Incorporation of standards of federal agency. (1) Whenever a provision of this chapter incorporates therein provisions of the Code of Federal Regulations (C.F.R.) and changes thereto, or any other regulations adopted by an agency of the federal government, that provision of this chapter shall be construed to mean that compliance with such regulations shall be prima facie evidence of compliance with the provisions of this chapter.

(2) Whenever a provision of this chapter incorporates therein provisions of the Code of Federal Regulations, the provisions so incorporated shall be those in effect on the date of effectiveness of this chapter, unless the content of the incorporating section specifies otherwise.

[Order 76-29, § 296-155-008, filed 9/30/76; Order 74-26, § 296-155-008, filed 5/7/74, effective 6/6/74.]

WAC 296-155-009 Equipment whether or not owned by, or under control of the employer. (1) It is the employer's responsibility to ensure that any defective equipment or tools are not used.

(2) When any tool or piece of equipment fails to meet the requirements of any safety standard or recognized safe practice, the tool or equipment shall not be used.

[Statutory Authority: RCW 49.17.040 and 49.17.050. WSR 86-03-074 (Order 86-14), § 296-155-009, filed 1/21/86.]

WAC 296-155-010 Variance and procedure. Realizing that conditions may exist in operations under which certain state standards will not have practical application, the director of the department of labor and industries or his/her authorized representative may, pursuant to this section, sections eight or nine of the Washington Industrial Safety and Health Act (chapter 80, Laws of 1973, RCW 49.17.080 and 49.17.090) and appropriate administrative rules of this state and the department of labor and industries and upon receipt of application and after adequate investigation by the department, permit a variation from these requirements when other means of providing an equivalent measure of protection are afforded. Such variation granted shall be limited to the particular case or cases covered in the application for variance and may be revoked for cause. The order granting a variance shall be conspicuously posted on the premises and shall remain posted during the time it is in effect. A copy of the variance shall be available at the work site. All requests for variances from safety and health standards included in this chapter, shall be made in writing to the director of the department of labor and industries at Olympia, Washington, or his/her duly authorized representative, Department of Labor and Industries, P.O. Box 44600, Olympia, Washington 98504-4600.

[Statutory Authority: Chapter 49.17 RCW. WSR 94-15-096 (Order 94-07), § 296-155-010, filed 7/20/94, effective 9/20/94. Statutory Authority: RCW 49.17.040 and 49.17.050. WSR 86-03-074 (Order 86-14), § 296-155-010, filed 1/21/86; Order 74-26, § 296-155-010, filed 5/7/74, effective 6/6/74.]

WAC 296-155-012 Definitions applicable to all sections of this chapter.

Note: Unless the context indicates otherwise, words used in this chapter shall have the meaning given in this section. Certain parts of this chapter contain definitions as they apply to that particular part.

"Approved" means approved by the director of the department of labor and industries or his/her authorized representative: Provided, however, That should a provision of this chapter state that approval by an agency or organization other than the department of labor and industries is required, such as Underwriters' Laboratories or the bureau of mines, the provisions of WAC 296-155-006 shall apply.

"Assistant director" means the individual in charge of the division of consultation and compliance, department of labor and industries, or an authorized representative.

"Authorized person" means a person approved or assigned by the employer to perform a specific type of duty or duties or be at a specific location or locations at the workplace.

"Competent person" means one who is capable of identifying existing and predictable hazards in the surroundings or working conditions which are unsanitary, hazardous, or dangerous to employees, and who has authorization to take prompt corrective action to eliminate them.

"Confined space" means a space that:

(1) Is large enough and so configured that an employee can bodily enter and perform assigned work; and

(2) Has limited or restricted means for entry or exit (for example, tanks, vessels, silos, storage bins, hoppers, vaults, and pits are spaces that may have limited means of entry); and

(3) Is not designed for continuous employee occupancy.

"Construction work" shall mean and include all or any part of excavation, construction, erection, alteration, repair, demolition, and dismantling, of buildings and other structures and all operations in connection therewith; the excavation, construction, alteration and repair of sewers, trenches, caissons, conduits, pipe lines, roads and all operations pertaining thereto; the moving of buildings and other structures, and to the construction, alteration, repair, or removal of wharfs, docks, bridges, culverts, trestles, piers, abutments or any other construction, alteration, repair or removal work related thereto.

"Defect" means any characteristic or condition which tends to weaken or reduce the strength of the tool, object, or structure of which it is a part.

"Department" means the department of labor and industries.

"Designated person" means "authorized person" as defined in this section.

"Director" means the director of the department of labor and industries, or his/her designated representative.

"Division" means the division of consultation and compliance of the department.

"Employer" means any person, firm, corporation, partnership, business trust, legal representative, or other business entity which engages in any business, industry, profession, or activity in this state and employs one or more employees or who contracts with one or more persons, the essence of which is the personal labor of such person or persons and includes the state, counties, cities, and all municipal corporations, public corporations, political subdivisions of the state, and charitable organizations: Provided, that any person, partnership, or business entity not having employees, and who is covered by the industrial insurance act shall be considered both an employer and an employee.

"Equipment" means all machinery, devices, tools, facilities, safeguards, and protective construction used in connection with construction operations.

"Ground fault circuit interrupter" means a fast acting circuit breaker that is sensitive to very low levels of current leakage to ground. The device is designed to limit the electric shock to a current and time duration below that which can cause serious injury.

"Hazard" means that condition, potential or inherent, which is likely to cause injury, death, or occupational disease.

"Hazardous substance" means a substance which, by reason of being explosive, flammable, poisonous, corrosive, oxidizing, irritating, or otherwise harmful, is likely to cause death or injury.

"Maintenance" means the work of keeping a building, machine, roadway, etc., in a state of good repair.

"Part" means a major division, of this chapter, relating to a specific topic or topics and containing various sections, subsections, etc.

"Permit-required confined space (permit space)" means a confined space that has one or more of the following characteristics:

(1) Contains or has a potential to contain a hazardous atmosphere;

(2) Contains a material that has the potential for engulfing an entrant;

(3) Has an internal configuration such that an entrant could be trapped or asphyxiated by inwardly converging walls or by a floor which slopes downward and tapers to a smaller cross-section; or

(4) Contains any other recognized serious safety or health hazard.

"Qualified" means one who, by possession of a recognized degree, certificate, or professional standing, or who by extensive knowledge, training, and experience, has successfully demonstrated their ability to solve or resolve problems relating to the subject matter, the work, or the project.

"Repair" means to restore a building, machine, roadway, etc., to an original state after damage or decay.

"Safety factor" means the ratio of the ultimate breaking strength of a member or piece of material or equipment to the actual working stress or safe load when in use.

"Safety and health standard" means a standard which requires the adoption or use of one or more practices, means, methods, operations, or processes reasonably necessary or appropriate to provide safe or healthful employment and places of employment.

"Shall" means that the provision(s) of the standard are mandatory.

"Substantial" means constructed of such strength, of such material, and of such workmanship, that the object referred to will withstand all normal wear, shock and usage.

"Standard safeguard" means a device designed and constructed with the object of removing the hazard of accident incidental to the machine, appliance, tool, building, or equipment to which it is attached.

Standard safeguards shall be constructed of either metal or wood or other suitable material or a combination of these. The final determination of the sufficiency of any safeguard rests with the director of the department of labor and industries through the division of consultation and compliance.

"Suitable" means that which fits, or has the qualities or qualifications to meet a given purpose, occasion, condition, function, or circumstance.

"Working day" means a calendar day, except Saturdays, Sundays, and legal holidays as set forth in RCW 1.16.050, as now or hereafter amended, and for the purposes of the computation of time within which an act is to be done under the provisions of this chapter, shall be computed by excluding the first working day and including the last working day.

"Worker," "personnel," "man," "person," "employee," and other terms of like meaning, unless the context of the provision containing such term indicates otherwise, mean an employee of an employer who is employed in the business of their employer whether by way of manual labor or otherwise and every person in this state who is engaged in the employment of or who is working under an independent contract the essence of which is their personal labor for an employer whether by manual labor or otherwise.

"Work place" means any plant, yard, premises, room, or other place where an employee or employees are employed for the performance of labor or service over which the employer has the right of access or control, and includes, but is not limited to, all work places covered by industrial insurance under Title 51 RCW, as now or hereafter amended.

Abbreviations used in this chapter:

"ANSI" means American National Standards Institute.

"API" means American Petroleum Institute.

"ASA" means American Standards Association.

"ASAE" means American Society of Agricultural Engineers.

"ASHRE" means American Society of Heating and Refrigeration Engineers.

"ASME" means American Society of Mechanical Engineers.

"ASTM" means American Society of Testing and Materials.

"AWS" means American Welding Society.

"BTU" means British thermal unit.

"BTUH" means British thermal unit per hour.

"CFM" means cubic feet per minute.

"C.F.R." means Code of Federal Register.

"CGA" means Compressed Gas Association.

"CIE" means Commission Internationale de l' Eclairage.

"DOT" means department of transportation.

"FRP" means fiberglass reinforced plastic.

"GPM" means gallons per minute.

"ICC" means Interstate Commerce Commission.

"ID" means inside diameter.

"LPG" means liquefied petroleum gas.

"MCA" means Manufacturing Chemist Association.

"MSHA" means United States Department of Labor, Mine Safety and Health Administration.

"NBFU" means National Board of Fire Underwriters.

"NEMA" means National Electrical Manufacturing Association.

"NFPA" means National Fire Protection Association.

"NTP" means normal temperature and pressure.

"OD" means outside diameter.

"PSI" means pounds per square inch.

"PSIA" means pounds per square inch absolute.

"PSIG" means pounds per square inch gauge.

"RMA" means Rubber Manufacturers Association.

"SAE" means Society of Automotive Engineers.

"TFI" means The Fertilizer Institute.

"TSC" means Trailer Standard Code.

"UL" means Underwriters' Laboratories, Inc.

"USASI" means United States of America Standards Institute.

"U.S.C." means United States Code.

"USCG" means United States Coast Guard.

"WAC" means Washington Administrative Code.

"WISHA" means Washington Industrial Safety and Health Act of 1973.

[Statutory Authority: Chapter 49.17 RCW. WSR 95-04-007, § 296-155-012, filed 1/18/95, effective 3/1/95. Statutory Authority: RCW 49.17.040 and 49.17.050. WSR 86-03-074 (Order 86-14), § 296-155-012, filed 1/21/86; Order 74-26, § 296-155-012, filed 5/7/74, effective 6/6/74.]

WAC 296-155-015 Education and first-aid standards. It shall be the duty of every employer to comply with such standards and systems of education for safety as shall be, from time to time, prescribed for such employer by the director of labor and industries or by statute. Refer to WAC 296-155-100 through 296-155-135 for additional requirements.

[Statutory Authority: Chapter 49.17 RCW. WSR 94-15-096 (Order 94-07), § 296-155-015, filed 7/20/94, effective 9/20/94; Order 74-26, § 296-155-015, filed 5/7/74, effective 6/6/74.]

WAC 296-155-020 Housekeeping. (1) All places of employment shall be kept clean to the extent that the nature of the work allows.

(2) To facilitate cleaning, every floor, working surface, and passageway shall be kept free from protruding nails, splinters, loose boards or openings.

(3) Cleaning and sweeping shall be performed in such a manner as to minimize the contamination of the air with dust.

(4) In areas where workers may pass or perform duties, all debris and accumulations of material shall be removed. Hoses and electrical conductors across aisles or passageways shall be covered or suspended overhead so that there is no tripping hazard.

(5) Where mechanical handling equipment is used, sufficient safe clearances shall be allowed for aisles, at loading docks, through doorways and wherever turns or passages must be made. Such aisles and passageways shall be marked.

(6) Storage of material shall not create a hazard. Bags, containers, bundles, construction materials and other equipment shall be stored in tiers, stacked, blocked or interlocked. They shall be limited in height so that they are stable and secure against falling, sliding, or collapse.

(7) Free access shall be maintained at all times to all exits, fire alarm boxes, fire extinguishing equipment, and any other emergency equipment. Free access means clear of all obstructions.

(8) Working and storage areas shall be kept free from accumulation of materials that pose hazards of tripping, fire, explosion, or pest harborage. Vegetation control shall be exercised.

(9) All lunchrooms, washrooms and restrooms shall be kept in a clean and sanitary condition. Garbage cans in lunchrooms and restrooms shall be equipped with fitted covers and the contents disposed of daily.

(10) During the course of construction, alteration, repair or demolition of buildings and structures, employers shall ensure continuous clean-up of their work area, including removal of all rubble, scrap, boxes, crates and excess material to trash disposal areas.

(11) Containers shall be provided for the collection and separation of waste, trash, oily or used rags, and other refuse. Containers used for garbage and other oily, flammable or hazardous wastes, such as caustics, acids, harmful dusts or similar materials shall be equipped with covers. Common garbage and other waste shall be disposed of at frequent and regular intervals. Chemical agents or substances which might react to create a hazardous condition shall be stored and disposed of separately. All hazardous wastes which are subject to the requirements of chapter 173-303 WAC shall be handled, accumulated and disposed of in accordance with that chapter.

(12) All floors and walkways shall be maintained in good condition. Loose or broken components shall be repaired or replaced. Secure footing shall be ensured on all floors and walkways.

[Statutory Authority: RCW 49.17.040 and 49.17.050. WSR 86-03-074 (Order 86-14), § 296-155-020, filed 1/21/86; Order 74-26, § 296-155-020, filed 5/7/74, effective 6/6/74.]

WAC 296-155-030 Acceptable certifications. (1) Pressure vessels. Current and valid certification by an insurance company or regulatory authority shall be deemed as acceptable evidence of safe installation, inspection, testing of pressure vessels provided by the employer.

(2) Boilers. Boilers provided by the employer shall be deemed to be in compliance with the requirements of this section when evidence of current and valid certification by an insurance company or regulatory authority attesting to the safe installation, inspection, and testing is presented.

(3) Other requirements. Regulations prescribing specific requirements for other types of pressure vessels and similar equipment are contained in Parts D and M of this chapter.

[Order 74-26, § 296-155-030, filed 5/7/74, effective 6/6/74.]

WAC 296-155-035 General requirements. (1) The use of any machinery, tool, material, or equipment which is not in compliance with any applicable requirements of this chapter is prohibited. Such machine, tool, material, or equipment shall either be identified as unsafe by tagging or locking the controls to render them inoperable or shall be physically removed from its place of operation.

(2) The employer shall permit only those employees qualified by training or experience to operate equipment and machinery.

(3) Employees shall use safeguards provided for their protection.

(4) Suitable clothing shall be worn for the job. Sufficient and proper clothing shall be worn to assist in preventing scratches, abrasions, slivers, sunburn, hot liquid burns, or similar hazards. Loose or ragged clothing, scarfs or ties shall not be worn while working around moving machinery.

(5) Where work is in progress above workers, a catch platform or other means shall be provided to protect those working below. All workers shall be notified. One completed floor shall be maintained between workers and steel or concrete work above.

(6) Employees shall report to their employers the existence of any unsafe equipment or method or any other hazard which, to their knowledge is unsafe and where such unsafe equipment or method or other hazard exists in violation of this chapter it shall be corrected.

(7) Nothing herein contained shall prevent the use of existing equipment during its lifetime provided it shall be properly safeguarded, maintained in good condition, be in conformity with applicable safety and health standards, and shall conform to safety factors for the material used, as herein provided.

(8) As construction progresses, the component parts of structures shall be secured or braced to prevent collapse or failure.

(9) Prompt and safe removal of injured employees from elevated work locations, trenches and excavations shall be ensured prior to commencement of work.

[Statutory Authority: RCW 49.17.040 and 49.17.050. WSR 86-03-074 (Order 86-14), § 296-155-035, filed 1/21/86; Order 74-26, § 296-155-035, filed 5/7/74, effective 6/6/74.]

WAC 296-155-040 Safe place standards. (1) Each employer shall furnish to each employee a place of employment free from recognized hazards that are causing or likely to cause serious injury or death to employees.

(2) Every employer shall require safety devices, furnish safeguards, and shall adopt and use practices, methods, operations, and processes which are reasonably adequate to render such employment and place of employment safe. Every employer shall do everything reasonably necessary to protect the life and safety of employees.

(3) No employer shall require any employee to go or be in any employment or place of employment which is hazardous to the employee.

(4) No employer shall fail or neglect:

(a) To provide and use safety devices and safeguards.

(b) To adopt and use methods and processes reasonably adequate to render the employment and place of employment safe.

(c) To do everything reasonably necessary to protect the life and safety of employees.

(5) No employer, owner, or lessee of any real property shall construct or cause to be constructed any place of employment that is hazardous to the employee.

(6) No person shall do any of the following:

(a) Remove, displace, damage, destroy or carry off any safety device, safeguard, notice, or warning, furnished for use in any employment or place of employment.

(b) Interfere in any way with the use thereof by any other person.

(c) Interfere with the use of any method or process adopted for the protection of any employee, including themselves, in such employment, or place of employment.

(d) Fail or neglect to do everything reasonably necessary to protect the life and safety of employees.

(7) The use of intoxicants or debilitating drugs while on duty is prohibited. Employees under the influence of intoxicants or drugs shall not be permitted in or around worksites. This subsection (7) shall not apply to employees taking prescription drugs or narcotics as directed and prescribed by a physician, provided such use does not endanger the employee or others.

[Statutory Authority: Chapter 49.17 RCW. WSR 94-15-096 (Order 94-07), § 296-155-040, filed 7/20/94, effective 9/20/94; Order 74-26, § 296-155-040, filed 5/7/74, effective 6/6/74.]

PART B-1

OCCUPATIONAL HEALTH AND ENVIRONMENTAL CONTROL

WAC 296-155-100 Management's responsibility. (1) It shall be the responsibility of management to establish, supervise, and enforce, in a manner which is effective in practice:

(a) A safe and healthful working environment.

(b) An accident prevention program as required by these standards.

(c) Training programs to improve the skill and competency of all employees in the field of occupational safety and health.

(2) Employees required to handle or use poisons, caustics, and other harmful substances shall be instructed regarding the safe handling and use, and be made aware of the potential hazards, personal hygiene, and personal protective measures required.

(3) In job site areas where harmful plants or animals are present, employees who may be exposed shall be instructed regarding the potential hazards, and how to avoid injury, and the first-aid procedures to be used in the event of injury.

(4) Employees required to handle or use flammable liquids, gases, or toxic materials shall be instructed in the safe handling and use of these materials and made aware of the specific requirements contained in Parts B, D, and other applicable parts of this standard.

(5) Permit-required confined spaces. The requirements of chapters 296-24, 296-62 and 296-155 WAC apply.

(6) The employer shall ensure that work assignments place no employee in a position or location not within ordinary calling distance of another employee able to render assistance in case of emergency.

Note: This subsection does not apply to operators of motor vehicles, watchpersons or other jobs which, by their nature, are single employee assignments. However, a definite procedure for checking the welfare of all employees during working hours should be instituted and all employees so advised.

(7) Each employer shall post and keep posted a notice or notices (Job Safety and Health Protection - Form F416-081-909) to be furnished by the department of labor and industries, informing employees of the protections and obligations provided for in the act and that for assistance and information, including copies of the act, and of specific safety and health standards employees should contact the employer or the nearest office of the department of labor and industries. Such notice or notices shall be posted by the employer at each establishment in a conspicuous place or places where notices to employees are customarily posted. Each employer shall take steps to assure that such notices are not altered, defaced, or covered by other material.

[Statutory Authority: RCW 49.17.010, 49.17.040, 49.17.050, 49.17.060. WSR 06-05-027, § 296-155-100, filed 2/7/06, effective 4/1/06. Statutory Authority: Chapter 49.17 RCW. WSR 95-04-007, § 296-155-100, filed 1/18/95, effective 3/1/95; WSR 94-15-096 (Order 94-07), § 296-155-100, filed 7/20/94, effective 9/20/94; WSR 91-24-017 (Order 91-07), § 296-155-100, filed 11/22/91, effective 12/24/91. Statutory Authority: RCW 49.17.040 and 49.17.050. WSR 86-03-074 (Order 86-14), § 296-155-100, filed 1/21/86; Order 76-6, § 296-155-100, filed 3/1/76; Order 74-26, § 296-155-100, filed 5/7/74, effective 6/6/74.]

WAC 296-155-105 Employee's responsibility. (1) Employees shall coordinate and cooperate with all other employees in an attempt to eliminate accidents.

(2) Employees shall study and observe all safety standards governing their work.

(3) Employees shall apply the principles of accident prevention in their daily work and shall use proper safety devices

and protective equipment as required by their employment or employer.

(4) Employees shall properly care for all personal protective equipment.

(5) Employees shall make a report, on the day of the incident, to their immediate supervisor, of each industrial injury or occupational illness, regardless of the degree of severity.

[Order 74-26, § 296-155-105, filed 5/7/74, effective 6/6/74.]

WAC 296-155-110 Accident prevention program. (1) Exemptions. Workers of employers whose primary business is other than construction, who are engaged solely in maintenance and repair work, including painting and decorating, are exempt from the requirement of this section provided:

(a) The maintenance and repair work, including painting and decorating, is being performed on the employer's premises, or facility.

(b) The length of the project does not exceed one week.

(c) The employer is in compliance with the requirements of WAC 296-800-140 Accident prevention program, and WAC 296-800-130, Safety committees and safety meetings.

(2) Each employer shall develop a formal accident-prevention program, tailored to the needs of the particular plant or operation and to the type of hazard involved. The department may be contacted for assistance in developing appropriate programs.

(3) The following are the minimal program elements for all employers:

A safety orientation program describing the employer's safety program and including:

(a) How, where, and when to report injuries, including instruction as to the location of first-aid facilities.

(b) How to report unsafe conditions and practices.

(c) The use and care of required personal protective equipment.

(d) The proper actions to take in event of emergencies including the routes of exiting from areas during emergencies.

(e) Identification of the hazardous gases, chemicals, or materials involved along with the instructions on the safe use and emergency action following accidental exposure.

(f) A description of the employer's total safety program.

(g) An on-the-job review of the practices necessary to perform the initial job assignments in a safe manner.

(4) Each accident-prevention program shall be outlined in written format.

(5) Every employer shall conduct crew leader-crew safety meetings as follows:

(a) Crew leader-crew safety meetings shall be held at the beginning of each job, and at least weekly thereafter.

(b) Crew leader-crew meetings shall be tailored to the particular operation.

(6) Crew leader-crew safety meetings shall address the following:

(a) A review of any walk-around safety inspection conducted since the last safety meeting.

(b) A review of any citation to assist in correction of hazards.

(c) An evaluation of any accident investigations conducted since the last meeting to determine if the cause of the unsafe acts or unsafe conditions involved were properly identified and corrected.

(d) Attendance shall be documented.

(e) Subjects discussed shall be documented.

Note: Subcontractors and their employees may, with the permission of the general contractor, elect to fulfill the requirements of subsection (5)(a) and (b) of this section by attending the prime contractors crew leader-crew safety meeting. Any of the requirements of subsections (6)(a), (b), (c), and (7) of this section not satisfied by the prime contractors safety meetings shall be the responsibility of the individual employers.

(7) Minutes of each crew leader-crew meeting shall be prepared and a copy shall be maintained at the location where the majority of the employees of each construction site report for work each day.

(8) Minutes of crew leader-crew safety meetings shall be retained by the employer for at least one year and shall be made available for review by personnel of the department, upon request.

(9) Every employer shall conduct walk-around safety inspections as follows:

(a) At the beginning of each job, and at least weekly thereafter, a walk-around safety inspection shall be conducted jointly by one member of management and one employee, elected by the employees, as their authorized representative.

(b) The employer shall document walk-around safety inspections and such documentation shall be available for inspection by personnel of the department.

(c) Records of walk-around inspections shall be maintained by the employer until the completion of the job.

[Statutory Authority: RCW 49.17.010, [49.17].040, and [49.17].050. WSR 01-11-038, § 296-155-110, filed 5/9/01, effective 9/1/01; WSR 00-08-078, § 296-155-110, filed 4/4/00, effective 7/1/00. Statutory Authority: Chapter 49.17 RCW. WSR 94-15-096 (Order 94-07), § 296-155-110, filed 7/20/94, effective 9/20/94; WSR 92-09-148 (Order 92-01), § 296-155-110, filed 4/22/92, effective 5/25/92. Statutory Authority: RCW 49.17.040 and 49.17.050. WSR 86-03-074 (Order 86-14), § 296-155-110, filed 1/21/86; Order 74-26, § 296-155-110, filed 5/7/74, effective 6/6/74.]

WAC 296-155-115 Safety bulletin board. There shall be installed and maintained in every fixed establishment (the place where employees regularly report to work) employing eight or more persons, a safety bulletin board sufficient in size to display and post safety bulletins, newsletters, posters, accident statistics and other safety educational material.

[Order 74-26, § 296-155-115, filed 5/7/74, effective 6/6/74.]

WAC 296-155-120 First-aid training and certification. This section is designed to assure that all employees in this state are afforded quick and effective first-aid attention in the event of an on the job injury. To achieve this purpose the presence of personnel trained in first-aid procedures at or near those places where employees are working is required. Compliance with the provisions of this section may require the presence of more than one first-aid trained person.

(1) Each employer must have available at all worksites, where a crew is present, a person or persons holding a valid first-aid certificate.

(2) All crew leaders, supervisors or persons in direct charge of one or more employees must have a valid first-aid certificate.

(3) For the purposes of this section, a crew means a group of two or more employees working at any worksite.

Note: The requirement that all crew leaders, supervisors or person in direct charge of one or more employees (subsection (3) of this section) applies even if other first-aid trained person(s) are available. In emergencies, crew leaders will be permitted to work up to thirty days without having the required certificate, providing an employee in the crew or another crew leaders in the immediate work area has the necessary certificate.

[Statutory Authority: RCW 49.17.010, 49.17.040, 49.17.050, and 49.17.060. WSR 04-07-160, § 296-155-120, filed 3/23/04, effective 5/1/04. Statutory Authority: RCW 49.17.010, [49.17].040, and [49.17].050. WSR 01-11-038, § 296-155-120, filed 5/9/01, effective 9/1/01; WSR 00-01-038, § 296-155-120, filed 12/7/99, effective 2/1/00. Statutory Authority: Chapter 49.17 RCW. WSR 94-15-096 (Order 94-07), § 296-155-120, filed 7/20/94, effective 9/20/94. Statutory Authority: RCW 49.17.040 and 49.17.050. WSR 86-03-074 (Order 86-14), § 296-155-120, filed 1/21/86; Order 74-26, § 296-155-120, filed 5/7/74, effective 6/6/74.]

WAC 296-155-125 First-aid supplies. (1) The first-aid kits and supplies requirements of the safety and health core rules, chapter 296-800 WAC, apply within the scope of chapter 296-155 WAC.

(2) All vehicles used to transport work crews must be equipped with first-aid supplies.

(3) When practical, a poster must be fastened and maintained either on or in the cover of each first-aid kit and at or near all phones plainly stating the worksite address or location, and the phone numbers of emergency medical responders for the worksite.

(4) Requirements of WAC 296-800-15030, Make sure emergency washing facilities are functional and readily accessible, apply within the scope of chapter 296-155 WAC.

[Statutory Authority: RCW 49.17.010, 49.17.040, 49.17.050, 49.17.060. WSR 06-05-027, § 296-155-125, filed 2/7/06, effective 4/1/06. Statutory Authority: RCW 49.17.010, [49.17].040, and [49.17].050. WSR 01-11-038, § 296-155-125, filed 5/9/01, effective 9/1/01; WSR 00-01-038, § 296-155-125, filed 12/7/99, effective 2/1/00. Statutory Authority: Chapter 49.17 RCW. WSR 94-15-096 (Order 94-07), § 296-155-125, filed 7/20/94, effective 9/20/94. Statutory Authority: RCW 49.17.040 and 49.17.050. WSR 86-03-074 (Order 86-14), § 296-155-125, filed 1/21/86; Order 74-26, § 296-155-125, filed 5/7/74, effective 6/6/74.]

WAC 296-155-130 First-aid station. Employers with fifty or more employees per shift at one location must establish a first-aid station in accordance with the requirements in chapter 296-800 WAC.

[Statutory Authority: RCW 49.17.010, [49.17].040, and [49.17].050. WSR 01-11-038, § 296-155-130, filed 5/9/01, effective 9/1/01; WSR 00-01-038, § 296-155-130, filed 12/7/99, effective 2/1/00. Statutory Authority: RCW 49.17.040 and 49.17.050. WSR 86-03-074 (Order 86-14), § 296-155-130, filed 1/21/86; Order 74-26, § 296-155-130, filed 5/7/74, effective 6/6/74.]

WAC 296-155-140 Sanitation. (1) Potable water.

(a) An adequate supply of potable water shall be provided in all places of employment.

(b) Portable containers used to dispense drinking water shall be capable of being tightly closed and equipped with a tap. Water shall not be dipped from containers.

(c) Any container used to distribute drinking water shall be clearly marked as to the nature of its contents and not used for any other purpose.

(d) The common drinking cup is prohibited.

(e) Where single service cups (to be used but once) are supplied, both a sanitary container for the unused cups and a receptacle for disposing of the used cups shall be provided.

(f) All water containers used to furnish drinking water shall be thoroughly cleaned at least once each week or more often as conditions require.

(g) The requirements of this subsection do not apply to mobile crews or to normally unattended work locations as long as employees working at these locations have transportation immediately available, within the normal course of their duties, to nearby facilities otherwise meeting the requirements of this section.

(h) The following definitions apply:

(i) Mobile crew: A work crew that routinely moves to a different work location periodically. Normally a mobile crew is not at the same location all day.

(ii) Normally unattended work location: An unattended site that is visited occasionally by one or more employees.

(iii) Nearby facility: A sanitary facility that is within three minutes travel by the transportation provided.

(iv) "Potable water" means water that is suitable for drinking by the public and meets the requirements of chapter 246-290 or 246-291 WAC.

(2) Wash water.

(a) Clean, tepid wash water, between 70 and 100 degrees Fahrenheit, shall be provided at all construction sites.

(b) Individual hand towels shall be provided. Both a sanitary container for the unused towels and a receptacle for disposal of used towels shall be provided.

(c) Hand soap, industrial hand cleaner or similar cleansing agents shall be provided. Cleansing agents shall be adequate to remove any paints, coatings, herbicides, insecticides or other contaminants.

(d) The requirements of this subsection do not apply to mobile crews or to normally unattended work locations as long as employees working at these locations have transportation immediately available, within the normal course of their duties, to nearby facilities otherwise meeting the requirements of this section.

(e) Gasoline or solvents shall not be used for personal cleaning.

(f) Wash water areas will be maintained in a dry condition. Slipping or other hazards shall be eliminated from the wash water area before it is acceptable for use.

(3) Nonpotable water.

(a) Outlets for nonpotable water, such as water for industrial or firefighting purposes only, shall be identified by signs meeting the requirements of Part E of this chapter, to indicate clearly that the water is unsafe and is not to be used for drinking, washing or cooking purposes.

(b) There shall be no cross-connection, open or potential, between a system furnishing potable water, a system furnishing nonpotable water or a system furnishing wash water.

(4) Toilets.

(a) The provisions of this section apply to both portable chemical toilets and to flush toilets, except where flush toilets are used the requirements of WAC 296-800-230 shall apply instead of (b) of this subsection.

(b) Accessible toilets shall be provided for employees according to the following table:

TABLE B-1

Number of Employees	Toilets Required
1 - 10	1
11 - 25	2
26 - 40	3
41 - 60	4
61 - 80	5
Over 80	one additional toilet for each additional twenty employees or any fraction thereof.

(c) When the employer provides both flush and portable chemical toilets, the number of employees allowed to be served by the flush toilets, per WAC 296-800-230 will be calculated. That number will be subtracted from the total number of employees and the employer will be required to provide an adequate number of portable chemical toilets for the number of remaining employees, as required by (b) of this subsection.

(d) Toilets shall be maintained in clean, sanitary and functional condition. Internal latches shall be provided to secure the units from inadvertent entry. Where there are twenty or more employees consisting of both sexes, facilities shall be provided for each sex.

(i) Each unit shall be properly cleaned on a routine basis.

(ii) Chemicals, toilet tissue and sanitary seat covers shall be maintained in a supply sufficient for use during the entire shift.

(iii) Any defective or inadequate unit shall be immediately removed from service.

(e) Specifications. The following specifications apply:

(i) A noncaustic chemical toilet (portable chemical toilet is) a self-contained unit equipped with a waste receiving chemical holding container.

(ii) Portable chemical toilets consisting of only a holding tank, commonly referred to as "elevator units" or "elevator toilets" are not acceptable. "Elevator units" may be used if they are individually located in a lockable room which affords privacy. When this type unit is used in a private individual lockable room the entire room will be considered a toilet facility, as such the room will meet all requirements of toilet facilities and be inspected in accordance with subsection (5)(b)(iii) of this section.

(iii) Rooms, buildings or shelters housing toilets shall be of sound construction, easy to clean, provide shelter and provide privacy. The toilet rooms shall be ventilated to the outside and adequately lighted. All openings into the toilet room shall be covered with 16-mesh screen.

(iv) Toilets shall be serviced on a regular schedule. Servicing shall include the use of a disinfectant for cleaning urinals and seats, removing waste from containers, recharging containers with an odor controlling chemical and installing an adequate supply of toilet tissue and seat covers.

(v) Service shall be performed in accordance with local codes by approved servicing organizations. Waste shall be disposed of or discharged in accordance with requirements of local health department regulations.

(vi) Waste containers shall be fabricated from impervious materials, e.g. plastic, steel, fiberglass or their equivalent. Containers shall be water tight and capable of containing the chemical waste in a sanitary manner. The container shall be fitted to the building in a manner so as to prevent insects from entering from the exterior of the building. Containers shall be adequate in size to be used by the number of persons, according to the schedule for minimum requirements, without filling the container to more than half of its volume before regularly scheduled servicing.

(vii) Removal of waste shall be handled in a clean and sanitary manner by means of a vacuum hose and received by a leak-proof tank truck. All valves on the tank shall be leak-proof.

(viii) Provisions shall be made so service trucks have a clear approach and convenient access to the toilets to be serviced.

(ix) Disposal of waste from tank trucks shall be in accordance with local health department requirements. In the absence of provisions by local health departments, waste must be disposed of through municipal or district sanitary sewage systems. Municipal or area sanitary sewage districts shall provide sewage disposal locations and facilities which are adequate and convenient for duly authorized toilet service organizations.

(f) The requirements of this subsection do not apply to mobile crews or to normally unattended work locations as long as employees working at these locations have transportation immediately available, within the normal course of their duties, to nearby facilities otherwise meeting the requirements of this section.

(5)(a) On multiemployer worksites, the prime contractor shall ensure that the requirements of this section are met. Each employer is responsible for seeing that facilities for their own employees are provided.

(b) Each employer shall ensure, at the beginning of each shift, that the sanitation facilities required by this section are inspected. If any facility or unit fails to meet the following requirements, immediate corrective action shall be taken. Such action shall be documented and maintained at the site for at least 72 hours. Inspection shall establish:

(i) Potable water: Sufficient supply of water, sufficient supply of cups, container integrity, cleanliness of unit and area, capacity of trash receptacle (empty).

(ii) Wash water: Sufficient supply of clean water, proper temperature, sufficient supply of towels, sufficient supply of cleansing agents, container integrity, cleanliness of unit and area without the presence of physical hazards, capacity of trash receptacle (empty).

(iii) Toilets: Sufficient supply of toilet tissue and sanitary seat covers, capacity and condition of chemical agent, capacity and condition of holding tank, cleanliness of unit and area without the presence of physical hazards, physical and structural condition of unit, condition of lock, condition of toilet seat and tissue holder, absence of all foreign debris.

(c) The location of the facilities required by subsections (1), (2) and (4) of this section shall be as close as practical to the highest concentration of employees.

(i) On multistory structures they shall be furnished on every third floor.

(ii) At all sites they shall be located within 200 feet horizontally of all employees.

(iii) The requirements of subsection (5)(c)(i) and (ii) do not apply to mobile crews or to normally unattended work locations as long as employees working at these locations have transportation immediately available, within the normal course of their duties, to nearby facilities otherwise meeting the requirements of this section.

(6) Food handling. All employees' food service facilities and operations shall meet the applicable laws, ordinances and regulations of the jurisdictions in which they are located.

(7) Temporary sleeping quarters. When temporary sleeping quarters are provided, they shall be heated, ventilated and lighted.

[Statutory Authority: RCW 49.17.010, 49.17.040, 49.17.050, 49.17.060 and chapter 49.17 RCW. WSR 12-24-071, § 296-155-140, filed 12/4/12, effective 1/4/13. Statutory Authority: RCW 49.17.010, [49.17].040, and [49.17].-050. WSR 01-11-038, § 296-155-140, filed 5/9/01, effective 9/1/01. Statutory Authority: Chapter 49.17 RCW. WSR 94-15-096 (Order 94-07), § 296-155-140, filed 7/20/94, effective 9/20/94; WSR 89-11-035 (Order 89-03), § 296-155-140, filed 5/15/89, effective 6/30/89. Statutory Authority: RCW 49.17.040 and 49.17.050. WSR 86-03-074 (Order 86-14), § 296-155-140, filed 1/21/86; Order 74-26, § 296-155-140, filed 5/7/74, effective 6/6/74.]

WAC 296-155-145 Occupational noise exposure. The occupational noise exposure requirements of chapter 296-817 WAC, Hearing loss prevention (noise), apply.

[Statutory Authority: RCW 49.17.010, 49.17.040, 49.17.050, and 49.17.060. WSR 03-11-060, § 296-155-145, filed 5/19/03, effective 8/1/03. Statutory Authority: RCW 49.17.040 and 49.17.050. WSR 85-01-022 (Order 84-24), § 296-155-145, filed 12/11/84; WSR 83-15-017 (Order 83-19), § 296-155-145, filed 7/13/83, effective 9/12/83; Order 76-29, § 296-155-145, filed 9/30/76; Order 74-26, § 296-155-145, filed 5/7/74, effective 6/6/74.]

WAC 296-155-150 Ionizing radiation. (1) In construction and related activities involving the use of sources of ionizing radiation, the pertinent provisions of the Nuclear Regulatory Commission's Standards for Protection Against Radiation, relating to protection against occupational radiation exposure, shall apply.

(2) Any activity which involves the use of radioactive material or X ray, whether or not under license from the Nuclear Regulatory Commission, shall be performed by competent persons specially trained in the proper and safe operation of such equipment. In the case of materials used under commission license, only persons actually licensed, or competent persons under direction and supervision of the licensee shall perform such work.

[Statutory Authority: Chapter 49.17 RCW. WSR 94-15-096 (Order 94-07), § 296-155-150, filed 7/20/94, effective 9/20/94; Order 74-26, § 296-155-150, filed 5/7/74, effective 6/6/74.]

WAC 296-155-155 Nonionizing radiation. (1) Only qualified and trained employees shall be assigned to install, adjust, and operate laser equipment.

(2) Proof of qualification of the laser equipment operator shall be available and in possession of operator at all times.

(3) Employees, when working in areas in which a potentially hazardous exposure (see WAC 296-62-09005(4)) to direct or reflected laser radiation exists, shall be provided with antilaser eye protection devices specified in Part C of this chapter.

(4) Areas in which Class II and III lasers are used shall be posted with standard laser warning placards.

(5) Beam shutters or caps shall be utilized, or the laser turned off, when laser transmission is not actually required. When the laser is left unattended for a substantial period of time, such as during lunch hour, overnight, or at change of shifts, the laser shall be turned off.

(6) Only mechanical or electronic means shall be used as a detector for guiding the internal alignment of the laser.

(7) The laser beam shall not be directed at employees.

(8) When it is raining or snowing, or when there is dust or fog in the air, and it is impracticable to cease laser system operation, employees shall be kept out of range of the area of source and target during such weather conditions.

(9) Laser equipment shall bear a conspicuously displayed label to indicate hazard classification. This label shall be prepared in accordance with 21 C.F.R. 1040.10.

(10) Only Class I, II, or III laser equipment shall be used. Class IV laser equipment shall not be used.

(11) Laser unit in operation shall be set up above the heads of the employees, when possible.

(12) Employees shall not be exposed to radiofrequency/microwave radiation in excess of the permissible exposure limits specified in WAC 296-62-09005.

[Statutory Authority: RCW 49.17.040 and 49.17.050. WSR 86-03-074 (Order 86-14), § 296-155-155, filed 1/21/86; WSR 85-01-022 (Order 84-24), § 296-155-155, filed 12/11/84; Order 74-26, § 296-155-155, filed 5/7/74, effective 6/6/74.]

WAC 296-155-160 Gases, vapors, fumes, dusts, and mists. (1) Exposure of employees to inhalation, ingestion, skin absorption, or contact with any material or substance at a concentration above those specified in chapter 296-841 WAC shall be avoided.

(2) To achieve compliance with subsection (1) of this section, administrative or engineering controls must first be implemented whenever feasible. When such controls are not feasible to achieve full compliance, protective equipment or other protective measures shall be used to keep the exposure of employees to air contaminants within the limits prescribed in WAC 296-62-07515 [296-841-20025]. Any equipment and technical measures used for this purpose must first be approved for each particular use by a competent industrial hygienist or other technically qualified person. Whenever respirators are used, their use shall comply with WAC 296-155-220.

(3) Whenever internal combustion equipment exhausts in enclosed spaces, tests shall be made and recorded to ensure that employees are not exposed to unsafe concentrations of toxic gases or oxygen deficient atmospheres. See chapter 296-62 WAC, the general occupational health standards and chapter 296-841 WAC, identifying and controlling respiratory hazards.

(4) Whenever any employee is exposed to asbestos, the provisions of the general occupational health standards, chapter 296-62 WAC shall apply.

(5) Subsections (1) and (2) of this section do not apply to the exposure of employees to formaldehyde. Whenever any employee is exposed to formaldehyde, the requirements of chapter 296-856 WAC shall apply.

[Statutory Authority: RCW 49.17.010, 49.17.040, 49.17.050, 49.17.060. WSR 07-03-163, § 296-155-160, filed 1/24/07, effective 4/1/07; WSR 06-08-087, § 296-155-160, filed 4/4/06, effective 9/1/06; WSR 05-03-093, § 296-155-160, filed 1/18/05, effective 3/1/05. Statutory Authority: Chapter 49.17 RCW. WSR 94-15-096 (Order 94-07), § 296-155-160, filed 7/20/94, effective 9/20/94; WSR 88-14-108 (Order 88-11), § 296-155-160, filed 7/6/88; WSR 87-24-051 (Order 87-24), § 296-155-160, filed 11/30/87. Statutory Authority: RCW 49.17.050(2) and 49.17.040. WSR 87-10-008 (Order 87-06), § 296-155-160, filed 4/27/87. Statutory Authority: RCW 49.17.040 and 49.17.050. WSR 86-03-074 (Order 86-14), § 296-155-160, filed 1/21/86. Statutory Authority: RCW 49.17.040 and 49.17.050. WSR 83-24-013 (Order 83-34), § 296-155-160, filed 11/30/83; Order 74-26, § 296-155-160, filed 5/7/74, effective 6/6/74.]

WAC 296-155-165 Lighting and illumination. For lighting and illumination requirements, see WAC 296-800-210, Lighting.

[Statutory Authority: RCW 49.17.010, 49.17.040, 49.17.050, 49.17.060. WSR 04-24-089, § 296-155-165, filed 12/1/04, effective 1/1/05. Statutory Authority: RCW 49.17.040 and 49.17.050. WSR 86-03-074 (Order 86-14), § 296-155-165, filed 1/21/86; Order 74-26, § 296-155-165, filed 5/7/74, effective 6/6/74.]

WAC 296-155-170 Ventilation. (1) General. Whenever hazardous substances such as dusts, fumes, mists, vapors, or gases exist or are produced in the course of construction work, their concentrations shall not exceed the limits specified in WAC 296-155-160(1). When ventilation is used as an engineering control method, the system shall be installed and operated according to the requirements of this section.

(2) Local exhaust ventilation. Local exhaust ventilation when used as described in (1) shall be designed to prevent dispersion into the air of dusts, fumes, mists, vapors, and gases in concentrations causing harmful exposure. Such exhaust systems shall be so designed that dusts, fumes, mists, vapors, or gases are not drawn through the work area of employees.

(3) Design and operation. Exhaust fans, jets, ducts, hoods, separators, and all necessary appurtenances, including refuse receptacles, shall be so designed, constructed, maintained and operated as to ensure the required protection by maintaining a volume and velocity of exhaust air sufficient to gather dusts, fumes, vapors, or gases from said equipment or process, and to convey them to suitable points of safe disposal, thereby preventing their dispersion in harmful quantities into the atmosphere where employees work.

(4) Duration of operations.

(a) The exhaust system shall be in operation continually during all operations which it is designed to serve. If the employee remains in the contaminated zone, the system shall continue to operate after the cessation of said operations, the length of time to depend upon the individual circumstances and effectiveness of the general ventilation system.

(b) Since dust capable of causing disability is, according to the best medical opinion, of microscopic size, tending to remain for hours in suspension in still air, it is essential that the exhaust system be continued in operation for a time after the work process or equipment served by the same shall have ceased, in order to ensure the removal of the harmful elements to the required extent.

Note: For the same reason, employees wearing respiratory equipment should not remove same immediately until a clear atmosphere has been established.

(5) Disposal of exhaust materials. The air outlet from every dust separator, and the dusts, fumes, mists, vapors, or gases collected by an exhaust or ventilating system shall discharge to the outside atmosphere. Collecting systems which return air to work area may be used if concentrations which accumulate in the work area air do not result in harmful exposure to employees. Dust and refuse discharged from an exhaust system shall be disposed of in such a manner that it will not result in harmful exposure to employees.

[Order 74-26, § 296-155-170, filed 5/7/74, effective 6/6/74.]

WAC 296-155-173 Methylenedianiline.

[Statutory Authority: Chapter 49.17 RCW. WSR 93-04-111 (Order 92-15), § 296-155-173, filed 2/3/93, effective 3/15/93.]

WAC 296-155-17301 Scope and application. (1) This section applies to all construction work as defined in WAC 296-155-005, in which there is exposure to MDA, including but not limited to the following:

(a) Construction, alteration, repair, maintenance, or renovation of structures, substrates, or portions thereof, that contain MDA;

(b) Installation or the finishing of surfaces with products containing MDA;

(c) MDA spill/emergency cleanup at construction sites; and

(d) Transportation, disposal, storage, or containment of MDA or products containing MDA on the site or location at which construction activities are performed.

(2) Except as provided in subsection (7) of this section and WAC 296-155-17311(5), this standard does not apply to the processing, use, and handling of products containing MDA where initial monitoring indicates that the product is not capable of releasing MDA in excess of the action level under the expected conditions of processing, use, and handling which will cause the greatest possible release; and where no "dermal exposure to MDA" can occur.

(3) Except as provided in subsection (7) of this section, this standard does not apply to the processing, use, and handling of products containing MDA where objective data are reasonably relied upon which demonstrate the product is not capable of releasing MDA under the expected conditions of processing, use, and handling which will cause the greatest possible release; and where no "dermal exposure to MDA" can occur.

(4) Except as provided in subsection (7) of this section, this standard does not apply to the storage, transportation, distribution, or sale of MDA in intact containers sealed in such a manner as to contain the MDA dusts, vapors, or liquids, except for the provisions of WAC 296-62-054 and 296-155-17309.

(5) Except as provided in subsection (7) of this section, this standard does not apply to materials in any form which contain less than 0.1% MDA by weight or volume.

(6) Except as provided in subsection (7) of this section, this standard does not apply to "finished articles containing MDA."

(7) Where products containing MDA are exempted under subsections (2) and (6) of this section, the employer shall maintain records of the initial monitoring results or

objective data supporting that exemption and the basis for the employer's reliance on the data, as provided in the record-keeping provision of WAC 296-155-17331.

[Statutory Authority: Chapter 49.17 RCW. WSR 93-04-111 (Order 92-15), § 296-155-17301, filed 2/3/93, effective 3/15/93.]

WAC 296-155-17303 Definitions. For the purpose of this standard, the following definitions shall apply:

(1) "Action level" means a concentration of airborne MDA of 5 ppb as an 8-hour time-weighted average.

(2) "Authorized person" means any person specifically authorized by the employer whose duties require the person to enter a regulated area, or any person entering such an area as a designated representative of employees for the purpose of exercising the right to observe monitoring and measuring procedures under WAC 296-155-17333, or any other person authorized by the act or regulations issued under the act.

(3) "Container" means any barrel, bottle, can, cylinder, drum, reaction vessel, storage tank, commercial packaging, or the like, but does not include piping systems.

(4) "Decontamination area" means an area outside of, but as near as practical to, the regulated area, consisting of an equipment storage area, wash area, and clean change area, which is used for the decontamination of workers, materials, and equipment contaminated with MDA.

(5) "Dermal exposure to MDA" occurs where employees are engaged in the handling, application, or use of mixtures or materials containing MDA, with any of the following nonairborne forms of MDA:

(a) Liquid, powdered, granular, or flaked mixtures containing MDA in concentrations greater than 0.1% by weight or volume; and

(b) Materials other than "finished articles" containing MDA in concentrations greater than 0.1% by weight or volume.

(6) "Director" means the director of the department of labor and industries.

(7) "Emergency" means any occurrence such as, but not limited to, equipment failure, rupture of containers, or failure of control equipment which results in an unexpected and potentially hazardous release of MDA.

(8) "Employee exposure" means exposure to MDA which would occur if the employee were not using respirators or protective work clothing and equipment.

(9) "Finished article containing MDA" is defined as a manufactured item:

(a) Which is formed to a specific shape or design during manufacture;

(b) Which has end use function(s) dependent in whole or part upon its shape or design during end use; and

(c) Where applicable, is an item which is fully cured by virtue of having been subjected to the conditions (temperature, time) necessary to complete the desired chemical reaction.

(10) "Historical monitoring data" means monitoring data for construction jobs that meet the following conditions:

(a) The data upon which judgments are based are scientifically sound and were collected using methods that are sufficiently accurate and precise;

(b) The processes and work practices that were in use when the historical monitoring data were obtained are essentially the same as those to be used during the job for which initial monitoring will not be performed;

(c) The characteristics of the MDA-containing material being handled when the historical monitoring data were obtained are the same as those on the job for which initial monitoring will not be performed;

(d) Environmental conditions prevailing when the historical monitoring data were obtained are the same as those on the job for which initial monitoring will not be performed; and

(e) Other data relevant to the operations, materials, processing, or employee exposures covered by the exception are substantially similar. The data must be scientifically sound, the characteristics of the MDA containing material must be similar, and the environmental conditions comparable.

(11) "4,4' methylenedianiline" or "MDA" means the chemical 4,4'-diaminodiphenylmethane, Chemical Abstract Service Registry Number 101-77-9, in the form of a vapor, liquid, or solid. The definition also includes the salts of MDA.

(12) "Regulated areas" means areas where airborne concentrations of MDA exceed or can reasonably be expected to exceed, the permissible exposure limits, or where "dermal exposure to MDA" can occur.

(13) "STEL" means short-term exposure limit as determined by any 15-minute sample period.

[Statutory Authority: Chapter 49.17 RCW. WSR 93-04-111 (Order 92-15), § 296-155-17303, filed 2/3/93, effective 3/15/93.]

WAC 296-155-17305 Permissible exposure limits. The employer shall assure that no employee is exposed to an airborne concentration of MDA in excess of ten parts per billion (10 ppb) as an 8-hour time-weighted average and a STEL of one hundred parts per billion (100 ppb).

[Statutory Authority: Chapter 49.17 RCW. WSR 93-04-111 (Order 92-15), § 296-155-17305, filed 2/3/93, effective 3/15/93.]

WAC 296-155-17307 Communication among employers. On multiemployer worksites, an employer performing work involving the application of MDA or materials containing MDA for which establishment of one or more regulated areas is required shall inform other employers on the site of the nature of the employer's work with MDA and of the existence of, and requirements pertaining to, regulated areas.

[Statutory Authority: Chapter 49.17 RCW. WSR 93-04-111 (Order 92-15), § 296-155-17307, filed 2/3/93, effective 3/15/93.]

WAC 296-155-17309 Emergency situations. (1) Written plan.

(a) A written plan for emergency situations shall be developed for each construction operation where there is a possibility of an emergency. The plan shall include procedures where the employer identifies emergency escape routes for her or his employees at each construction site before the construction operation begins. Appropriate portions of the plan shall be implemented in the event of an emergency.

(b) The plan shall specifically provide that employees engaged in correcting emergency conditions shall be equipped with the appropriate personal protective equipment

and clothing as required in WAC 296-155-17317 and 296-155-17319 until the emergency is abated.

(c) The plan shall specifically include provisions for alerting and evacuating affected employees as well as the applicable elements prescribed in WAC 296-24-567, "Employee emergency plans and fire prevention plans."

(2) Alerting employees. Where there is the possibility of employee exposure to MDA due to an emergency, means shall be developed to promptly alert employees who have the potential to be directly exposed. Affected employees not engaged in correcting emergency conditions shall be evacuated immediately in the event that an emergency occurs. Means shall also be developed for alerting other employees who may be exposed as a result of the emergency.

[Statutory Authority: Chapter 49.17 RCW. WSR 93-04-111 (Order 92-15), § 296-155-17309, filed 2/3/93, effective 3/15/93.]

WAC 296-155-17311 Exposure monitoring. (1) General.

(a) Determinations of employee exposure shall be made from breathing zone air samples that are representative of each employee's exposure to airborne MDA over an eight-hour period. Determination of employee exposure to the STEL shall be made from breathing zone air samples collected over a fifteen minute sampling period.

(b) Representative employee exposure shall be determined on the basis of one or more samples representing full shift exposure for each shift for each job classification in each work area where exposure to MDA may occur.

(c) Where the employer can document that exposure levels are equivalent for similar operations in different work shifts, the employer shall only be required to determine representative employee exposure for that operation during one shift.

(2) Initial monitoring. Each employer who has a workplace or work operation covered by this standard shall perform initial monitoring to determine accurately the airborne concentrations of MDA to which employees may be exposed unless:

(a) The employer can demonstrate, on the basis of objective data, that the MDA-containing product or material being handled cannot cause exposures above the standard's action level, even under worst-case release conditions; or

(b) The employer has historical monitoring or other data demonstrating that exposures on a particular job will be below the action level.

(3) Periodic monitoring and monitoring frequency.

(a) If the monitoring required by subsection (2)(b) of this section reveals employee exposure at or above the action level, but at or below the PELs, the employer shall repeat such monitoring for each such employee at least every six months.

(b) If the monitoring required by subsection (2)(b) of this section reveals employee exposure above the PELs, the employer shall repeat such monitoring for each such employee at least every three months.

(c) Employers who are conducting MDA operations within a regulated area can forego periodic monitoring if the employees are all wearing supplied-air respirators while working in the regulated area.

(d) The employer may alter the monitoring schedule from every three months to every six months for any employee for whom two consecutive measurements taken at least seven days apart indicate that the employee exposure has decreased to below the PELs but above the action level.

(4) Termination of monitoring.

(a) If the initial monitoring required by subsection (2)(b) of this section reveals employee exposure to be below the action level, the employer may discontinue the monitoring for that employee, except as otherwise required by subsection (5) of this section.

(b) If the periodic monitoring required by subsection (3) of this section reveals that employee exposures, as indicated by at least two consecutive measurements taken at least seven days apart, are below the action level the employer may discontinue the monitoring for that employee, except as otherwise required by subsection (5) of this section.

(5) Additional monitoring. The employer shall institute the exposure monitoring required under subsections (2)(b) and (c) of this section when there has been a change in production process, chemicals present, control equipment, personnel, or work practices which may result in new or additional exposures to MDA, or when the employer has any reason to suspect a change which may result in new or additional exposures.

(6) Accuracy of monitoring. Monitoring shall be accurate, to a confidence level of ninety-five percent, to within plus or minus twenty-five percent for airborne concentrations of MDA.

(7) Employee notification of monitoring results.

(a) The employer shall, as soon as possible but no later than five working days after the receipt of the results of any monitoring performed under this standard, notify each employee of these results, in writing, either individually or by posting of results in an appropriate location that is accessible to affected employees.

(b) The written notification required by subdivision (a) of this subsection shall contain the corrective action being taken by the employer or any other protective measures which have been implemented to reduce the employee exposure to or below the PELs, wherever the PELs are exceeded.

(8) Visual monitoring. The employer shall make routine inspections of employee hands, face, and forearms potentially exposed to MDA. Other potential dermal exposures reported by the employee must be referred to the appropriate medical personnel for observation. If the employer determines that the employee has been exposed to MDA the employer shall:

(a) Determine the source of exposure;

(b) Implement protective measures to correct the hazard; and

(c) Maintain records of the corrective actions in accordance with WAC 296-155-17327.

[Statutory Authority: RCW 49.17.010, 49.17.040, 49.17.050, 49.17.060. WSR 06-05-027, § 296-155-17311, filed 2/7/06, effective 4/1/06. Statutory Authority: Chapter 49.17 RCW. WSR 93-04-111 (Order 92-15), § 296-155-17311, filed 2/3/93, effective 3/15/93.]

WAC 296-155-17313 Regulated areas. (1) Establishment.

(a) Airborne exposures. The employer shall establish regulated areas where airborne concentrations of MDA exceed, or can reasonably be expected to exceed, the permissible exposure limits.

(b) Dermal exposures. Where employees are subject to "dermal exposure to MDA" the employer shall establish those work areas as regulated areas.

(2) Demarcation. Regulated areas shall be demarcated from the rest of the workplace in a manner that minimizes the number of persons potentially exposed.

(3) Access. Access to regulated areas shall be limited to authorized persons.

(4) Personal protective equipment and clothing. Each person entering a regulated area shall be supplied with, and required to use, the appropriate personal protective clothing and equipment in accordance with WAC 296-155-17317 and 296-155-17319.

(5) Prohibited activities. The employer shall ensure that employees do not eat, drink, smoke, chew tobacco or gum, or apply cosmetics in regulated areas.

[Statutory Authority: Chapter 49.17 RCW. WSR 93-04-111 (Order 92-15), § 296-155-17313, filed 2/3/93, effective 3/15/93.]

WAC 296-155-17315 Methods of compliance. (1) Engineering controls and work practices and respirators.

(a) The employer shall use one or any combination of the following control methods to achieve compliance with the permissible exposure limits prescribed by WAC 296-155-17317.

(i) Local exhaust ventilation equipped with HEPA filter dust collection systems;

(ii) General ventilation systems;

(iii) Use of work practices; or

(iv) Other engineering controls such as isolation and enclosure that the director can show to be feasible.

(b) Wherever the feasible engineering controls and work practices which can be instituted are not sufficient to reduce employee exposure to or below the PELs, the employer shall use them to reduce employee exposure to the lowest levels achievable by these controls and shall supplement them by the use of respiratory protective devices which comply with the requirements of WAC 296-155-17317.

(2) Special provisions. For workers engaged in spray application methods, respiratory protection must be used in addition to feasible engineering controls and work practices to reduce employee exposure to or below the PELs.

(3) Prohibitions. Compressed air shall not be used to remove MDA unless the compressed air is used in conjunction with an enclosed ventilation system designed to capture the dust cloud created by the compressed air.

(4) Employee rotation. The employer shall not use employee rotation as a means of compliance with the exposure limits prescribed in WAC 296-155-17305.

(5) Compliance program.

(a) The employer shall establish and implement a written program to reduce employee exposure to or below the PELs by means of engineering and work practice controls, as required by subsection (1) of this section, and by use of respiratory protection where permitted under this section.

(b) Upon request this written program shall be furnished for examination and copying to the director, affected employees, and designated employee representatives. The employer shall review and, as necessary, update such plans at least once every twelve months to make certain they reflect the current status of the program.

[Statutory Authority: Chapter 49.17 RCW. WSR 93-04-111 (Order 92-15), § 296-155-17315, filed 2/3/93, effective 3/15/93.]

WAC 296-155-17317 Respiratory protection. (1) General. For employees who use respirators required by this section, the employer must provide each employee with an appropriate respirator that complies with the requirements of this section. Respirators must be used during:

(a) Periods necessary to install or implement feasible engineering and work-practice controls.

(b) Work operations, such as maintenance and repair activities and spray application processes, for which engineering and work-practice controls are not feasible.

(c) Work operations for which feasible engineering and work-practice controls are not yet sufficient to reduce employee exposure to or below the PELs.

(d) Emergencies.

(2) Respirator program. The employer must develop, implement and maintain a respiratory protection program as required by chapter 296-842 WAC, Respirators, which covers each employee required by this chapter to use a respirator.

(3) Respirator selection.

(a) The employer must select and provide to employees appropriate respirators as specified in this section and WAC 296-842-13005 in the respirator rule.

(b) An employee who cannot use a negative-pressure respirator must be given the option of using a positive-pressure respirator, or a supplied-air respirator operated in the continuous-flow or pressure-demand mode.

(c) Provide HEPA filters or N-, R-, or P-100 filters for powered air-purifying respirators (PAPRs) and negative-pressure air-purifying respirators.

(d) Provide to employees, for escape, one of the following respirator options:

(i) Any self-contained breathing apparatus with a full facepiece or hood, operated in the positive-pressure or continuous-flow mode

OR

(ii) A full facepiece air-purifying respirator.

[Statutory Authority: RCW 49.17.010, 49.17.040, 49.17.050, 49.17.060. WSR 09-15-145, § 296-155-17317, filed 7/21/09, effective 9/1/09; WSR 07-05-072, § 296-155-17317, filed 2/20/07, effective 4/1/07; WSR 05-03-093, § 296-155-17317, filed 1/18/05, effective 3/1/05. Statutory Authority: RCW 49.17.010, [49.17].040 and [49.17].050. WSR 99-10-071, § 296-155-17317, filed 5/4/99, effective 9/1/99. Statutory Authority: Chapter 49.17 RCW. WSR 93-04-111 (Order 92-15), § 296-155-17317, filed 2/3/93, effective 3/15/93.]

WAC 296-155-17319 Protective work clothing and equipment. (1) Provision and use. Where employees are subject to dermal exposure to MDA, where liquids containing MDA can be splashed into the eyes, or where airborne concentrations of MDA are in excess of the PEL, the employer shall provide, at no cost to the employee, and ensure that the employee uses, appropriate protective work clothing and

equipment which prevent contact with MDA such as, but not limited to:

(a) Aprons, coveralls, or other full-body work clothing;

(b) Gloves, head coverings, and foot coverings; and

(c) Face shields, chemical goggles; or

(d) Other appropriate protective equipment which comply with WAC 296-24-078.

(2) Removal and storage.

(a) The employer shall ensure that, at the end of their work shift, employees remove MDA-contaminated protective work clothing and equipment that is not routinely removed throughout the day in change areas provided in accordance with the provisions in WAC 296-155-17321.

(b) The employer shall ensure that, during their work shift, employees remove all other MDA-contaminated protective work clothing or equipment before leaving a regulated area.

(c) The employer shall ensure that no employee takes MDA-contaminated work clothing or equipment out of the decontamination areas, except those employees authorized to do so for the purpose of laundering, maintenance, or disposal.

(d) MDA-contaminated work clothing or equipment shall be placed and stored and transported in sealed, impermeable bags, or other closed impermeable containers.

(e) Containers of MDA-contaminated protective work clothing or equipment which are to be taken out of decontamination areas or the workplace for cleaning, maintenance, or disposal, shall bear labels warning of the hazards of MDA.

(3) Cleaning and replacement.

(a) The employer shall provide the employee with clean protective clothing and equipment. The employer shall ensure that protective work clothing or equipment required by this section is cleaned, laundered, repaired, or replaced at intervals appropriate to maintain its effectiveness.

(b) The employer shall prohibit the removal of MDA from protective work clothing or equipment by blowing, shaking, or any methods which allow MDA to reenter the workplace.

(c) The employer shall ensure that laundering of MDA-contaminated clothing shall be done so as to prevent the release of MDA in the workplace.

(d) Any employer who gives MDA-contaminated clothing to another person for laundering shall inform such person of the requirement to prevent the release of MDA.

(e) The employer shall inform any person who launders or cleans protective clothing or equipment contaminated with MDA of the potentially harmful effects of exposure.

(4) Visual examination.

(a) The employer shall ensure that employees' work clothing is examined periodically for rips or tears that may occur during performance of work.

(b) When rips or tears are detected, the protective equipment or clothing shall be repaired and replaced immediately.

[Statutory Authority: Chapter 49.17 RCW. WSR 93-04-111 (Order 92-15), § 296-155-17319, filed 2/3/93, effective 3/15/93.]

WAC 296-155-17321 Hygiene facilities and practices. (1) General.

(a) The employer shall provide decontamination areas for employees required to work in regulated areas or required by WAC 296-155-17319 to wear protective clothing. Exception: In lieu of the decontamination area requirement specified in this subsection, the employer may permit employees engaged in small scale, short duration operations, to clean their protective clothing or dispose of the protective clothing before such employees leave the area where the work was performed.

(b) Change areas. The employer shall ensure that change areas are equipped with separate storage facilities for protective clothing and street clothing, in accordance with WAC 296-24-12011.

(c) Equipment area. The equipment area shall be supplied with impermeable, labeled bags and containers for the containment and disposal of contaminated protective clothing and equipment.

(2) Shower area.

(a) Where feasible, shower facilities shall be provided which comply with WAC 296-24-12010 wherever the possibility of employee exposure to airborne levels of MDA in excess of the permissible exposure limit exists.

(b) Where dermal exposure to MDA occurs, the employer shall ensure that materials spilled or deposited on the skin are removed as soon as possible by methods which do not facilitate the dermal absorption of MDA.

(3) Lunch areas.

(a) Whenever food or beverages are consumed at the worksite and employees are exposed to MDA the employer shall provide clean lunch areas were MDA levels are below the action level and where no dermal exposure to MDA can occur.

(b) The employer shall ensure that employees wash their hands and faces with soap and water prior to eating, drinking, smoking, or applying cosmetics.

(c) The employer shall ensure that employees do not enter lunch facilities with contaminated protective work clothing or equipment.

[Statutory Authority: RCW 49.17.010, [49.17].040, and [49.17].050. WSR 01-11-038, § 296-155-17321, filed 5/9/01, effective 9/1/01. Statutory Authority: Chapter 49.17 RCW. WSR 93-04-111 (Order 92-15), § 296-155-17321, filed 2/3/93, effective 3/15/93.]

WAC 296-155-17323 Communication of hazards. (1) Hazard communication—General.

(a) Chemical manufacturers, importers, distributors and employers shall comply with all requirements of the Hazard Communication Standard (HCS), WAC 296-901-140 for MDA.

(b) In classifying the hazards for MDA at least the following hazards are to be addressed: Cancer; liver effects; and skin sensitization.

(c) Employers shall include MDA in the hazard communication program established to comply with the HCS, WAC 296-901-140. Employers shall ensure that each employee has access to labels on containers of MDA and to safety data sheets, and is trained in accordance with the requirements of HCS and subsection (4) of this section.

(2) Signs and labels.

(a) Signs.

(i) The employer shall post and maintain legible signs demarcating regulated areas and entrances or accessways to regulated areas that bear the following legend:

DANGER MDA MAY CAUSE CANCER CAUSES DAMAGE TO THE LIVER
RESPIRATORY PROTECTION AND PROTECTIVE CLOTHING MAY BE REQUIRED IN THIS AREA
AUTHORIZED PERSONNEL ONLY

(ii) Prior to June 1, 2016, employers may use the following legend in lieu of that specified in (a)(i) of this subsection:

DANGER MDA MAY CAUSE CANCER LIVER TOXIN
AUTHORIZED PERSONNEL ONLY
RESPIRATORS AND PROTECTIVE CLOTHING MAY BE REQUIRED TO BE WORN IN THIS AREA

(b) Labels. Prior to June 1, 2015, employers may include the following information workplace labels in lieu of the labeling requirements in subsection (1) of this section:

(i) For pure MDA:

DANGER CONTAINS MDA MAY CAUSE CANCER LIVER TOXIN

(ii) For mixtures containing MDA:

DANGER CONTAINS MDA CONTAINS MATERIALS WHICH MAY CAUSE CANCER LIVER TOXIN

(3) Safety data sheets (SDS).

In meeting the obligation to provide safety data sheets, employers shall make appropriate use of the information found in Appendices A and B to WAC 296-62-076.

(4) Information and training.

(a) The employer shall provide employees with information and training on MDA, in accordance with WAC 296-901-14016, at the time of initial assignment and at least annually thereafter.

(b) In addition to the information required under WAC 296-901-140, the employer shall:

(i) Provide an explanation of the contents of this section, including Appendices A and B of this section, and indicate to employees where a copy of the standard is available;

(ii) Describe the medical surveillance program required under WAC 296-155-17327, and explain the information contained in Appendix C of this standard; and

(iii) Describe the medical removal provision required under WAC 296-155-17327.

(5) Access to training materials.

(a) The employer shall make readily available to all affected employees, without cost, all written materials relating to the employee training program, including a copy of this regulation.

(b) The employer shall provide to the director, upon request, all information and training materials relating to the employee information and training program.

[Statutory Authority: RCW 49.17.010, 49.17.040, 49.17.050, 49.17.060 and 29 C.F.R. 1910 Subpart Z. WSR 14-07-086, § 296-155-17323, filed 3/18/14, effective 5/1/14. Statutory Authority: RCW 49.17.010, [49.17].040, and [49.17].050. WSR 01-11-038, § 296-155-17323, filed 5/9/01, effective 9/1/01. Statutory Authority: Chapter 49.17 RCW. WSR 93-04-111 (Order 92-15), § 296-155-17323, filed 2/3/93, effective 3/15/93.]

WAC 296-155-17325 Housekeeping. (1) All surfaces shall be maintained as free as practicable of visible accumulations of MDA.

(2) The employer shall institute a program for detecting MDA leaks, spills, and discharges, including regular visual inspections of operations involving liquid or solid MDA.

(3) All leaks shall be repaired and liquid or dust spills cleaned up promptly.

(4) Surfaces contaminated with MDA may not be cleaned by the use of compressed air.

(5) Shoveling, dry sweeping, and other methods of dry clean-up of MDA may be used where HEPA-filtered vacuuming and/or wet cleaning are not feasible or practical.

(6) Waste, scrap, debris, bags, containers, equipment, and clothing contaminated with MDA shall be collected and disposed of in a manner to prevent the reentry of MDA into the workplace.

[Statutory Authority: Chapter 49.17 RCW. WSR 93-04-111 (Order 92-15), § 296-155-17325, filed 2/3/93, effective 3/15/93.]

WAC 296-155-17327 Medical surveillance. (1) General.

(a) The employer shall make available a medical surveillance program for employees exposed to MDA under the following circumstances:

(i) Employees exposed at or above the action level for thirty or more days per year;

(ii) Employees who are subject to dermal exposure to MDA for 15 or more days per year;

(iii) Employees who have been exposed in an emergency situation;

(iv) Employees whom the employer, based on results from compliance with WAC 296-155-17311(8) has reason to believe are being dermally exposed; and

(v) Employees who show signs or symptoms of MDA exposure.

(b) The employer shall ensure that all medical examinations and procedures are performed by or under the supervision of a licensed physician at a reasonable time and place, and provided without cost to the employee.

(2) Initial examinations.

(a) Within one hundred fifty days of the effective date of this standard, or before the time of initial assignment, the employer shall provide each employee covered by subsection (1)(a) of this section with a medical examination including the following elements:

A detailed history which includes:

(i) Past work exposure to MDA or any other toxic substances;

(ii) A history of drugs, alcohol, tobacco, and medication routinely taken (duration and quantity); and

(iii) A history of dermatitis, chemical skin sensitization, or previous hepatic disease.

(iv) A physical examination which includes all routine physical examination parameters, skin examination, and examination for signs of liver disease.

(v) Laboratory tests including:

(A) Liver function tests; and

(B) Urinalysis.

(vi) Additional tests as necessary in the opinion of the physician.

(b) No initial medical examination is required if adequate records show that the employee has been examined in accordance with the requirements of this section within the previous six months prior to the effective date of this standard or prior to the date of initial assignment.

(3) Periodic examinations.

(a) The employer shall provide each employee covered by this section with a medical examination at least annually following the initial examination. These periodic examinations shall include at least the following elements:

(i) A brief history regarding any new exposure to potential liver toxins, changes in drug, tobacco, and alcohol intake, and the appearance of physical signs relating to the liver and the skin;

(ii) The appropriate tests and examinations including liver function tests and skin examinations; and

(iii) Appropriate additional tests or examinations as deemed necessary by the physician.

(b) If in the physician's opinion the results of liver function tests indicate an abnormality, the employee shall be removed from further MDA exposure in accordance with WAC 296-155-17329. Repeat liver function tests shall be conducted on advice of the physician.

(4) Emergency examinations. If the employer determines that the employee has been exposed to a potentially hazardous amount of MDA in an emergency situation under WAC 296-155-17309, the employer shall provide medical examinations in accordance with subsection (3)(a) and (b). If the results of liver function testing indicate an abnormality, the employee shall be removed in accordance with WAC 296-155-17329. Repeat liver function tests shall be conducted on the advice of the physician. If the results of the tests are normal, tests must be repeated two to three weeks from the initial testing. If the results of the second set of tests are normal and on the advice of the physician, no additional testing is required.

(5) Additional examinations. Where the employee develops signs and symptoms associated with exposure to MDA, the employer shall provide the employee with an additional medical examination including liver function tests. Repeat liver function tests shall be conducted on the advice of the physician. If the results of the tests are normal, tests must be repeated two to three weeks from the initial testing. If the results of the second set of tests are normal and on the advice of the physician, no additional testing is required.

(6) Multiple physician review mechanism.

(a) If the employer selects the initial physician who conducts any medical examination or consultation provided to an employee under this section, and the employee has signs or symptoms of occupational exposure to MDA (which could include an abnormal liver function test), and the employee disagrees with the opinion of the examining physician, and this opinion could affect the employee's job status, the employee may designate an appropriate and mutually acceptable second physician:

(i) To review any findings, determinations, or recommendations of the initial physician; and

(ii) To conduct such examinations, consultations, and laboratory tests as the second physician deems necessary to facilitate this review.

(b) The employer shall promptly notify an employee of the right to seek a second medical opinion after each occasion that an initial physician conducts a medical examination or consultation pursuant to this section. The employer may condition its participation in, and payment for, the multiple physician review mechanism upon the employee doing the following within fifteen days after receipt of the foregoing notification, or receipt of the initial physician's written opinion, whichever is later:

(i) The employee informing the employer that he or she intends to seek a second medical opinion; and

(ii) The employee initiating steps to make an appointment with a second physician.

(c) If the findings, determinations, or recommendations of the second physician differ from those of the initial physician, then the employer and the employee shall assure that efforts are made for the two physicians to resolve any disagreement.

(d) If the two physicians have been unable to quickly resolve their disagreement, then the employer and the employee through their respective physicians shall designate a third physician:

(i) To review any findings, determinations, or recommendations of the prior physicians; and

(ii) To conduct such examinations, consultations, laboratory tests, and discussions with the prior physicians as the third physician deems necessary to resolve the disagreement of the prior physicians.

(e) The employer shall act consistent with the findings, determinations, and recommendations of the second physician, unless the employer and the employee reach a mutually acceptable agreement.

(f) Information provided to the examining physician.

(i) The employer shall provide the following information to the examining physician:

(A) A copy of this regulation and its appendices;

(B) A description of the affected employee's duties as they relate to the employee's potential exposure to MDA;

(C) The employee's current actual or representative MDA exposure level;

(D) A description of any personal protective equipment used or to be used; and

(E) Information from previous employment related medical examinations of the affected employee.

(ii) The employer shall provide the foregoing information to a second physician under this section upon request either by the second physician, or by the employee.

(g) Physician's written opinion.

(i) For each examination under this section, the employer shall obtain, and provide the employee with a copy of, the examining physician's written opinion within fifteen days of its receipt. The written opinion shall include the following:

(A) The occupationally pertinent results of the medical examination and tests;

(B) The physician's opinion concerning whether the employee has any detected medical conditions which would place the employee at increased risk of material impairment of health from exposure to MDA;

(C) The physician's recommended limitations upon the employee's exposure to MDA or upon the employee's use of protective clothing or equipment and respirators; and

(D) A statement that the employee has been informed by the physician of the results of the medical examination and any medical conditions resulting from MDA exposure which require further explanation or treatment.

(ii) The written opinion obtained by the employer shall not reveal specific findings or diagnoses unrelated to occupational exposures.

[Statutory Authority: Chapter 49.17 RCW. WSR 93-04-111 (Order 92-15), § 296-155-17327, filed 2/3/93, effective 3/15/93.]

WAC 296-155-17329 Medical removal. (1) Temporary medical removal of an employee.

(a) Temporary removal resulting from occupational exposure. The employee shall be removed from work environments in which exposure to MDA is at or above the action level or where dermal exposure to MDA may occur, following an initial examination (WAC 296-155-17327(2)), periodic examinations (WAC 296-155-17327(3)), an emergency situation (WAC 296-155-17327(4)), or an additional examination (WAC 296-155-17327(5)) in the following circumstances:

(i) When the employee exhibits signs and/or symptoms indicative of acute exposure to MDA; or

(ii) When the examining physician determines that an employee's abnormal liver function tests are not associated with MDA exposure but that the abnormalities may be exacerbated as a result of occupational exposure to MDA.

(b) Temporary removal due to a final medical determination.

(i) The employer shall remove an employee from work having an exposure to MDA at or above the action level or where the potential for dermal exposure exists on each occasion that a final medical determination results in a medical finding, determination, or opinion that the employee has a detected medical condition which places the employee at increased risk of material impairment to health from exposure to MDA.

(ii) For the purposes of this section, the phrase "final medical determination" shall mean the outcome of the physician review mechanism used pursuant to the medical surveillance provisions of this section.

(iii) Where a final medical determination results in any recommended special protective measures for an employee, or limitations on an employee's exposure to MDA, the employer shall implement and act consistent with the recommendation.

(2) Return of the employee to former job status.

(a) The employer shall return an employee to her or his former job status:

(i) When the employee no longer shows signs or symptoms of exposure to MDA, or upon the advice of the physician.

(ii) When a subsequent final medical determination results in a medical finding, determination, or opinion that the employee no longer has a detected medical condition which places the employee at increased risk of material impairment to health from exposure to MDA.

(b) For the purposes of this section, the requirement that an employer return an employee to his or her former job status is not intended to expand upon or restrict any rights an employee has or would have had, absent temporary medical removal, to a specific job classification or position under the terms of a collective bargaining agreement.

(3) Removal of other employee special protective measure or limitations. The employer shall remove any limitations placed on an employee or end any special protective measures provided to an employee pursuant to a final medical determination when a subsequent final medical determination indicates that the limitations or special protective measures are no longer necessary.

(4) Employer options pending a final medical determination. Where the physician review mechanism used pursuant to the medical surveillance provisions of this section has not yet resulted in a final medical determination with respect to an employee, the employer shall act as follows:

(a) Removal. The employer may remove the employee from exposure to MDA, provide special protective measures to the employee, or place limitations upon the employee, consistent with the medical findings, determinations, or reccommendations of the physician who has reviewed the employee's health status.

(b) Return. The employer may return the employee to her or his former job status, and end any special protective measures provided to the employee, consistent with the medical findings, determinations, or reccommendations of any of the physicians who have reviewed the employee's health status, with two exceptions:

(i) If the initial removal, special protection, or limitation of the employee resulted from a final medical determination which differed from the findings, determinations, or reccommendations of the initial physician; or

(ii) The employee has been on removal status for the preceding six months as a result of exposure to MDA, then the employer shall await a final medical determination.

(5) Medical removal protection benefits.

(a) Provisions of medical removal protection benefits. The employer shall provide to an employee up to six months of medical removal protection benefits on each occasion that an employee is removed from exposure to MDA or otherwise limited pursuant to this section.

(b) Definition of medical removal protection benefits. For the purposes of this section, the requirement that an employer provide medical removal protection benefits means that the employer shall maintain the earnings, seniority, and other employment rights and benefits of an employee as though the employee had not been removed from normal exposure to MDA or otherwise limited.

(c) Follow-up medical surveillance during the period of employee removal or limitations. During the period of time that an employee is removed from normal exposure to MDA or otherwise limited, the employer may condition the provision of medical removal protection benefits upon the employee's participation in follow-up medical surveillance made available pursuant to this section.

(d) Workers' compensation claims. If a removed employee files a claim for workers' compensation payments for an MDA-related disability, then the employer shall continue to provide medical removal protection benefits pending disposition of the claim. To the extent that an award is made to the employee for earnings lost during the period of removal, the employer's medical removal protection obligation shall be reduced by such amount. The employer shall receive no credit for workers' compensation payments received by the employee for treatment-related expenses.

(e) Other credits. The employer's obligation to provide medical removal protection benefits to a removed employee

shall be reduced to the extent that the employee receives compensation for earnings lost during the period of removal either from a publicly or employer-funded compensation program, or receives income from employment with any employer made possible by virtue of the employee's removal.

(f) Employees who do not recover within the 6 months of removal. The employer shall take the following measures with respect to any employee removed from exposure to MDA:

(i) The employer shall make available to the employee a medical examination pursuant to this section to obtain a final medical determination with respect to the employee;

(ii) The employer shall assure that the final medical determination obtained indicates whether or not the employee may be returned to her or his former job status, and, if not, what steps should be taken to protect the employee's health;

(iii) Where the final medical determination has not yet been obtained, or once obtained indicates that the employee may not yet be returned to her or his former job status, the employer shall continue to provide medical removal protection benefits to the employee until either the employee is returned to former job status, or a final medical determination is made that the employee is incapable of ever safely returning to her or his former job status; and

(iv) Where the employer acts pursuant to a final medical determination which permits the return of the employee to her or his former job status despite what would otherwise be an unacceptable liver function test, later questions concerning removing the employee again shall be decided by a final medical determination. The employer need not automatically remove such an employee pursuant to the MDA removal criteria provided by this section.

(6) Voluntary removal or restriction of an employee. Where an employer, although not required by this section to do so, removes an employee from exposure to MDA or otherwise places limitations on an employee due to the effects of MDA exposure on the employee's medical condition, the employer shall provide medical removal protection benefits to the employee equal to that required by subsection (5) of this section.

[Statutory Authority: Chapter 49.17 RCW. WSR 93-04-111 (Order 92-15), § 296-155-17329, filed 2/3/93, effective 3/15/93.]

WAC 296-155-17331 Recordkeeping. (1) Objective data for exempted operations.

(a) Where the employer has relied on objective data that demonstrate that products made from or containing MDA are not capable of releasing MDA or do not present a dermal exposure problem under the expected conditions of processing, use, or handling to exempt such operations from the initial monitoring requirements under WAC 296-155-17311(2), the employer shall establish and maintain an accurate record of objective data reasonably relied upon in support of the exemption.

(b) The record shall include at least the following information:

(i) The product qualifying for exemption;

(ii) The source of the objective data;

(iii) The testing protocol, results of testing, and/or analysis of the material for the release of MDA;

(iv) A description of the operation exempted and how the data support the exemption; and

(v) Other data relevant to the operations, materials, processing, or employee exposures covered by the exemption.

(c) The employer shall maintain this record for the duration of the employer's reliance upon such objective data.

(2) Historical monitoring data.

(a) Where the employer has relied on historical monitoring data that demonstrate that exposures on a particular job will be below the action level to exempt such operations from the initial monitoring requirements under WAC 296-155-17311(2), the employer shall establish and maintain an accurate record of historical monitoring data reasonably relied upon in support of the exception.

(b) The record shall include information that reflect the following conditions:

(i) The data upon which judgments are based are scientifically sound and were collected using methods that are sufficiently accurate and precise;

(ii) The processes and work practices that were in use when the historical monitoring data were obtained are essentially the same as those to be used during the job for which initial monitoring will not be performed;

(iii) The characteristics of the MDA-containing material being handled when the historical monitoring data were obtained are the same as those on the job for which initial monitoring will not be performed;

(iv) Environmental conditions prevailing when the historical monitoring data were obtained are the same as those on the job for which initial monitoring will not be performed; and

(v) Other data relevant to the operations, materials, processing, or employee exposures covered by the exception.

(c) The employer shall maintain this record for the duration of the employer's reliance upon such historical monitoring data.

(3) The employer may utilize the services of competent organizations such as industry trade associations and employee associations to maintain the records required by this section.

(4) Exposure measurements.

(a) The employer shall keep an accurate record of all measurements taken to monitor employee exposure to MDA.

(b) This record shall include at least the following information:

(i) The date of measurement;

(ii) The operation involving exposure to MDA;

(iii) Sampling and analytical methods used and evidence of their accuracy;

(iv) Number, duration, and results of samples taken;

(v) Type of protective devices worn, if any; and

(vi) Name, Social Security number, and exposure of the employees whose exposures are represented.

(c) The employer shall maintain this record for at least thirty years in accordance with chapter 296-62 WAC, Part B.

(5) Medical surveillance.

(a) The employer shall establish and maintain an accurate record for each employee subject to medical surveillance by WAC 296-155-17327 in accordance with chapter 296-62 WAC, Part B.

(b) The record shall include at least the following information:

(i) The name and Social Security number of the employee;

(ii) A copy of the employee's medical examination results, including the medical history, questionnaire responses, results of any tests, and physician's recommendations;

(iii) Physician's written opinions;

(iv) Any employee medical complaints related to exposure to MDA; and

(v) A copy of the information provided to the physician as required by WAC 296-155-17327.

(c) The employer shall ensure that this record is maintained for the duration of employment plus thirty years in accordance with chapter 296-62 WAC, Part B.

(d) A copy of the employee's medical removal and return to work status.

(6) Training records. The employer shall maintain all employee training records for one year beyond the last date of employment.

(7) Availability.

(a) The employer, upon written request, shall make all records required to be maintained by this section available to the assistant secretary and the director for examination and copying.

(b) The employer, upon request, shall make any exposure records required by WAC 296-155-17311 and 296-155-17327 available for examination and copying to affected employees, former employees, designated representatives, and the director, in accordance with chapter 296-802 WAC.

(c) The employer, upon request, shall make employee medical records required by WAC 296-155-17327 and this section available for examination and copying to the subject employee, anyone having the specific written consent of the subject employee, and the director in accordance with chapter 296-802 WAC.

(8) Transfer of records.

(a) The employer shall comply with the requirements concerning transfer of records set forth in chapter 296-802 WAC.

(b) Whenever the employer ceases to do business and there is no successor employer to receive and retain the records for the prescribed period, the employer shall notify the director at least ninety days prior to disposal and, upon request, transmit them to the director.

[Statutory Authority: RCW 49.17.010, 49.17.040, 49.17.050, and 49.17.060. WSR 04-10-026, § 296-155-17331, filed 4/27/04, effective 8/1/04. Statutory Authority: Chapter 49.17 RCW. WSR 93-04-111 (Order 92-15), § 296-155-17331, filed 2/3/93, effective 3/15/93.]

WAC 296-155-17333 Observation of monitoring. (1) Employee observation. The employer shall provide affected employees, or their designated representatives, an opportunity to observe the measuring or monitoring of employee exposure to MDA conducted pursuant to WAC 296-155-17311.

(2) Observation procedures. When observation of the measuring or monitoring of employee exposure to MDA requires entry into areas where the use of protective clothing and equipment or respirators is required, the employer shall provide the observer with personal protective clothing and equipment or respirators required to be worn by employees working in the area, assure the use of such clothing and equipment or respirators, and require the observer to comply with all other applicable safety and health procedures.

[Statutory Authority: Chapter 49.17 RCW. WSR 93-04-111 (Order 92-15), § 296-155-17333, filed 2/3/93, effective 3/15/93.]

WAC 296-155-17337 Appendices. The information contained in Appendices A, B, C, and D of this standard is not intended by itself, to create any additional obligations not otherwise imposed by this standard nor detract from any existing obligation.

[Statutory Authority: RCW 49.17.010, [49.17].040 and [49.17].050. WSR 99-10-071, § 296-155-17337, filed 5/4/99, effective 9/1/99. Statutory Authority: Chapter 49.17 RCW. WSR 93-04-111 (Order 92-15), § 296-155-17337, filed 2/3/93, effective 3/15/93.]

WAC 296-155-17339 Startup dates. Compliance with all obligations of this standard commence March 3, 1993, except as follows:

(1) Initial monitoring under WAC 296-155-17311(2) shall be completed as soon as possible but no later than June 3, 1993.

(2) Medical examinations under WAC 296-155-17327, shall be completed as soon as possible but no later than August 14, 1993.

(3) Emergency plans required by WAC 296-155-17309 shall be provided and available for inspection and copying as soon as possible but no later than July 13, 1993.

(4) Initial training and education shall be completed as soon as possible but no later than July 13, 1993.

(5) Decontamination and lunch areas under WAC 296-155-17321 shall be in operation as soon as possible but no later than March 3, 1993.

(6) Respiratory protection required by WAC 296-155-17317 shall be provided as soon as possible but no later than July 13, 1993.

(7) Written compliance plans required by WAC 296-155-17315(5) shall be completed and available for inspection and copying as soon as possible but no later than July 13, 1993.

(8) WISHA shall enforce the permissible exposure limits in WAC 296-155-17305 no earlier than July 13, 1993.

(9) Engineering controls needed to achieve the PELs must be in place March 3, 1993.

(10) Personal protective clothing required by WAC 296-155-17317 shall be available July 13, 1993.

[Statutory Authority: Chapter 49.17 RCW. WSR 93-04-111 (Order 92-15), § 296-155-17339, filed 2/3/93, effective 3/15/93.]

WAC 296-155-17341 Appendix A to WAC 296-155-173—Substance data sheet, for 4-4'-methylenedianiline. (1) Substance identification.

(a) Substance: Methylenedianiline (MDA).

(b) Permissible exposure:

(i) Airborne: Ten parts per billion parts of air (10 ppb), time-weighted average (TWA) for an eight-hour workday and an action level of five parts per billion parts of air (5 ppb).

(ii) Dermal: Eye contact and skin contact with MDA are not permitted.

(c) Appearance and odor: White to tan solid; amine odor.

(2) Health hazard data.

(a) Ways in which MDA affects your health. MDA can affect your health if you inhale it or if it comes in contact with your skin or eyes. MDA is also harmful if you happen to swallow it. Do not get MDA in eyes, on skin, or on clothing.

(b) Effects of overexposure.

(i) Short-term (acute) overexposure: Overexposure to MDA may produce fever, chills, loss of appetite, vomiting, jaundice. Contact may irritate skin, eyes, and mucous membranes. Sensitization may occur.

(ii) Long-term (chronic) exposure. Repeated or prolonged exposure to MDA, even at relatively low concentrations, may cause cancer. In addition, damage to the liver, kidneys, blood, and spleen may occur with long-term exposure.

(iii) Reporting signs and symptoms: You should inform your employer if you develop any signs or symptoms which you suspect are caused by exposure to MDA including yellow staining of the skin.

(3) Protective clothing and equipment.

(a) Respirators. Respirators are required for those operations in which engineering controls or work practice controls are not adequate or feasible to reduce exposure to the permissible limit. If respirators are worn, they must be certified by the National Institute for Occupational Safety and Health (NIOSH) under 42 C.F.R. part 84, and cartridges or canisters must be replaced as necessary to maintain the effectiveness of the respirator. If you experience difficulty breathing while wearing a respirator, you may request a positive-pressure respirator from your employer. You must be thoroughly trained to use the assigned respirator, and the training will be provided by your employer. MDA does not have a detectable odor except at levels well above the permissible exposure limits. Do not depend on odor to warn you when a respirator canister is exhausted. If you can smell MDA while wearing a respirator, proceed immediately to fresh air. If you experience difficulty breathing while wearing a respirator, tell your employer.

(b) Protective clothing. You may be required to wear coveralls, aprons, gloves, face shields, or other appropriate protective clothing to prevent skin contact with MDA. Where protective clothing is required, your employer is required to provide clean garments to you, as necessary, to assure that the clothing protects you adequately. Replace or repair impervious clothing that has developed leaks. MDA should never be allowed to remain on the skin. Clothing and shoes which are not impervious to MDA should not be allowed to become contaminated with MDA, and if they do, the clothing and shoes should be promptly removed and decontaminated. The clothing should be laundered to remove MDA or discarded. Once MDA penetrates shoes or other leather articles, they should not be worn again.

(c) Eye protection. You must wear splashproof safety goggles in areas where liquid MDA may contact your eyes. Contact lenses should not be worn in areas where eye contact with MDA can occur. In addition, you must wear a face shield if your face could be splashed with MDA liquid.

(4) Emergency and first-aid procedures.

(a) Eye and face exposure. If MDA is splashed into the eyes, wash the eyes for at least fifteen minutes. See a doctor as soon as possible.

(b) Skin exposure. If MDA is spilled on your clothing or skin, remove the contaminated clothing and wash the exposed skin with large amounts of soap and water immediately. Wash contaminated clothing before you wear it again.

(c) Breathing. If you or any other person breathes in large amounts of MDA, get the exposed person to fresh air at once. Apply artificial respiration if breathing has stopped. Call for medical assistance or a doctor as soon as possible. Never enter any vessel or confined space where the MDA concentration might be high without proper safety equipment and at least one other person present who will stay outside. A life line should be used.

(d) Swallowing. If MDA has been swallowed and the patient is conscious, do not induce vomiting. Call for medical assistance or a doctor immediately.

(5) Medical requirements. If you are exposed to MDA at a concentration at or above the action level for more than thirty days per year, or exposed to liquid mixtures more than fifteen days per year, your employer is required to provide a medical examination, including a medical history and laboratory tests, within sixty days of the effective date of this standard and annually thereafter. These tests shall be provided without cost to you. In addition, if you are accidentally exposed to MDA (either by ingestion, inhalation, or skin/eye contact) under conditions known or suspected to constitute toxic exposure to MDA, your employer is required to make special examinations and tests available to you.

(6) Observation of monitoring. Your employer is required to perform measurements that are representative of your exposure to MDA and you or your designated representative are entitled to observe the monitoring procedure. You are entitled to observe the steps taken in the measurement procedure and to record the results obtained. When the monitoring procedure is taking place in an area where respirators or personal protective clothing and equipment are required to be worn; you and your representative must also be provided with, and must wear, the protective clothing and equipment.

(7) Access to records. You or your representative are entitled to see the records of measurements of your exposure to MDA upon written request to your employer. Your medical examination records can be furnished to your physician or designated representative upon request by you to your employer.

(8) Precautions for safe use, handling, and storage.

(a) Material is combustible. Avoid strong acids and their anhydrides. Avoid strong oxidants. Consult supervisor for disposal requirements.

(b) Emergency clean-up. Wear self-contained breathing apparatus and fully clothe the body in the appropriate personal protective clothing and equipment.

[Statutory Authority: RCW 49.17.010, [49.17].040 and [49.17].050. WSR 99-10-071, § 296-155-17341, filed 5/4/99, effective 9/1/99. Statutory Authority: Chapter 49.17 RCW. WSR 93-04-111 (Order 92-15), § 296-155-17341, filed 2/3/93, effective 3/15/93.]

WAC 296-155-17343 Appendix B to WAC 296-155-173—Substance technical guidelines, MDA. (1) Identification.

(a) Substance identification.

(i) Synonyms: CAS No. 101-77-9. 4,4'-methylenedianiline; 4,4'-methylenebisaniline; methylenedianiline; dianilinomethane.

(ii) Formula: $C_{13}H_{14}N_2$.

(b) Physical data.

(2) Appearance and odor: White to tan solid; amine odor.

(a) Molecular weight: 198.26.

(b) Boiling point: 398-399 degrees C. at 760 mm Hg.

(c) Melting point: 88-93 degrees C. (190-100 degrees F.).

(d) Vapor pressure: 9 mm Hg at 232 degrees C.

(e) Evaporation rate (n-butyl acetate=1): Negligible.

(f) Vapor density (Air=1): Not applicable.

(g) Volatile fraction by weight: Negligible.

(h) Specific gravity (Water=1): Slight.

(i) Heat of combustion: -8.40 kcal/g.

(j) Solubility in water: Slightly soluble in cold water, very soluble in alcohol, benzene, ether, and many organic solvents.

(3) Fire, explosion, and reactivity hazard data.

(a) Flash point: 190 degrees C. (374 degrees F.) Setaflash closed cup.

(b) Flash point: 226 degrees C. (439 degrees F.) Cleveland open cup.

(c) Extinguishing media: Water spray; dry chemical; carbon dioxide.

(d) Special firefighting procedures: Wear self-contained breathing apparatus and protective clothing to prevent contact with skin and eyes.

(e) Unusual fire and explosion hazards: Fire or excessive heat may cause production of hazardous decomposition products.

(4) Reactivity data.

(a) Stability: Stable.

(b) Incompatibility: Strong oxidizers.

(c) Hazardous decomposition products: As with any other organic material, combustion may produce carbon monoxide. Oxides of nitrogen may also be present.

(d) Hazardous polymerization: Will not occur.

(5) Spill and leak procedures.

(a) Sweep material onto paper and place in fiber carton.

(b) Package appropriately for safe feed to an incinerator or dissolve in compatible waste solvents prior to incineration.

(c) Dispose of in an approved incinerator equipped with afterburner and scrubber or contract with licensed chemical waste disposal service.

(d) Discharge treatment or disposal may be subject to federal, state, or local laws.

(e) Wear appropriate personal protective equipment.

(6) Special storage and handling precautions.

(a) High exposure to MDA can occur when transferring the substance from one container to another. Such operations should be well ventilated and good work practices must be established to avoid spills.

(b) Pure MDA is a solid with a low vapor pressure. Grinding or heating operations increase the potential for exposure.

(c) Store away from oxidizing materials.

(d) Employers shall advise employees of all areas and operations where exposure to MDA could occur.

(7) Housekeeping and hygiene facilities.

(a) The workplace should be kept clean, orderly, and in a sanitary condition. The employer should institute a leak and spill detection program for operations involving MDA in order to detect sources of fugitive MDA emissions.

(b) Adequate washing facilities with hot and cold water are to be provided and maintained in a sanitary condition. Suitable cleansing agents should also be provided to assure the effective removal of MDA from the skin.

(8) Common operations. Common operations in which exposure to MDA is likely to occur include the following: Manufacture of MDA; manufacture of methylene diisocyanate; curing agent for epoxy resin structures; wire coating operations; and filament winding.

[Statutory Authority: Chapter 49.17 RCW. WSR 93-04-111 (Order 92-15), § 296-155-17343, filed 2/3/93, effective 3/15/93.]

WAC 296-155-17345 Appendix C to WAC 296-155-173—Medical surveillance guidelines for MDA. (1) Route of entry. Inhalation; skin absorption; ingestion. MDA can be inhaled, absorbed through the skin, or ingested.

(2) Toxicology. MDA is a suspect carcinogen in humans. There are several reports of liver disease in humans and animals resulting from acute exposure to MDA. A well documented case of an acute cardiomyopathy secondary to exposure to MDA is on record. Numerous human cases of hepatitis secondary to MDA are known. Upon direct contact MDA may also cause damage to the eyes. Dermatitis and skin sensitization have been observed. Almost all forms of acute environmental hepatic injury in humans involve the hepatic parenchyma and produce hepatocellular jaundice. This agent produces intrahepatic cholestasis. The clinical picture consists of cholestatic jaundice, preceded or accompanied by abdominal pain, fever, and chills. Onset in about 60% of all observed cases is abrupt with severe abdominal pain. In about 30% of observed cases, the illness presented and evolved more slowly and less dramatically, with only slight abdominal pain. In about 10% of the cases only jaundice was evident. The cholestatic nature of the jaundice is evident in the prominence of itching, the histologic predominance of bile stasis, and portal inflammatory infiltration, accompanied by only slight parenchymal injury in most cases, and by the moderately elevated transaminase values. Acute, high doses, however, have been known to cause hepatocellular damage resulting in elevated SGPT, SGOT, alkaline phosphatase, and bilirubin. Absorption through the skin is rapid. MDA is metabolized and excreted over a 48-hour period. Direct contact may be irritating to the skin, causing dermatitis. Also MDA which is deposited on the skin is not thoroughly removed through washing. MDA may cause bladder cancer in humans. Animal data supporting this assumption is not available nor is conclusive human data. However, human data collected on workers at a helicopter manufacturing facility where MDA is used suggests a higher incidence of bladder cancer among exposed workers.

(3) Signs and symptoms. Skin may become yellow from contact with MDA. Repeated or prolonged contact with MDA may result in recurring dermatitis (red-itchy, cracked skin) and eye irritation. Inhalation, ingestion, or absorption through the skin at high concentrations may result in hepatitis, causing symptoms such as fever and chills, nausea and

vomiting, dark urine, anorexia, rash, right upper quadrant pain, and jaundice. Corneal burns may occur when MDA is splashed in the eyes.

(4) Treatment of acute toxic effects/emergency situation. If MDA gets into the eyes, immediately wash eyes with large amounts of water. If MDA is splashed on the skin, immediately wash contaminated skin with mild soap or detergent. Employee should be removed from exposure and given proper medical treatment. Medical tests required under the emergency section of the medical surveillance (WAC 296-155-17327(4)) must be conducted. If the chemical is swallowed do not induce vomiting but remove by gastric lavage.

[Statutory Authority: Chapter 49.17 RCW. WSR 93-04-111 (Order 92-15), § 296-155-17345, filed 2/3/93, effective 3/15/93.]

WAC 296-155-17347 Appendix D to WAC 296-155-173—Sampling and analytical methods for MDA monitoring and measurement procedures. Measurements taken for the purpose of determining employee exposure to MDA are best taken so that the representative average eight-hour exposure may be determined from a single eight-hour sample or two four-hour samples. Short-time interval samples (or grab samples) may also be used to determine average exposure level if a minimum of five measurements are taken in a random manner over the eight-hour work shift. Random sampling means that any portion of the work shift has the same chance of being sampled as any other. The arithmetic average of all such random samples taken on one work shift is an estimate of an employee's average level of exposure for that work shift. Air samples should be taken in the employee's breathing zone (air that would most nearly represent that inhaled by the employee). There are a number of methods available for monitoring employee exposures to MDA. The method OSHA currently uses is included below. The employer however has the obligation of selecting any monitoring method which meets the accuracy and precision requirements of the standard under her or his unique field conditions. The standard requires that the method of monitoring must have an accuracy, to a ninety-five percent confidence level, of not less than plus or minus twenty-five percent for the select PEL.

WISHA methodology.

Sampling procedure.

Apparatus:

Samples are collected by use of a personal sampling pump that can be calibrated within +/-5% of the recommended flow rate with the sampling filter in line. Samples are collected on 37 mm Gelman type A/E glass fiber filters treated with sulfuric acid. The filters are prepared by soaking each filter with 0.5 mL of 0.26N H_2SO_4. (0.26 N H_2SO_4 can be prepared by diluting 1.5 mL of 36N H_2SO_4 to 200 mL with deionized water.) The filters are dried in an oven at 100 degrees C. for one hour and then assembled into three-piece 37 mm polystyrene cassettes without backup pads. The front filter is separated from the back filter by a polystyrene spacer. The cassettes are sealed with shrink bands and the ends are plugged with plastic plugs. After sampling, the filters are carefully removed from the cassettes and individually transferred to small vials containing approximately 2 mL deionized water. The vials must be tightly sealed. The water can be added before or after the filters are transferred. The vials must be sealable and capable of holding at least 7 mL of liquid. Small glass scintillation vials with caps containing Teflon liners are recommended.

Reagents:

Deionized water is needed for addition to the vials.

Sampling technique:

Immediately before sampling, remove the plastic plugs from the filter cassettes. Attach the cassette to the sampling pump with flexible tubing and place the cassette in the employee's breathing zone. After sampling, seal the cassettes with plastic plugs until the filters are transferred to the vials containing deionized water. At some convenient time within ten hours of sampling, transfer the sample filters to vials. Seal the small vials lengthwise. Submit at least one blank filter with each sample set. Blanks should be handled in the same manner as samples, but no air is drawn through them. Record sample volumes (in L of air) for each sample, along with any potential interferences.

Retention efficiency:

A retention efficiency study was performed by drawing 100 L of air (80% relative humidity) at 1 L/min through sample filters that had been spiked with 0.814 micro-g MDA. Instead of using backup pads, blank acid-treated filters were used as backups in each cassette. Upon analysis, the top filters were found to have an average of 91.8% of the spiked amount. There was no MDA found on the bottom filters, so the amount lost was probably due to the slight instability of the MDA salt.

Extraction efficiency:

The average extraction efficiency for six filters spiked at the target concentration is 99.6%. The stability of extracted and derivatized samples was verified by reanalyzing the above six samples the next day using fresh standards. The average extraction efficiency for the reanalyzed samples is 98.7%.

Recommended air volume and sampling rate. The recommended air volume is 100 L. The recommended sampling rate is 1 L/min.

Interferences (sampling):

MDI appears to be a positive interference. It was found that when MDI was spiked onto an acid-treated filter, the MDI converted to MDA after air was drawn through it. Suspected interferences should be reported to the laboratory with submitted samples.

Safety precautions (sampling):

Attach the sampling equipment to the employees so that it will not interfere with work performance or safety. Follow all safety procedures that apply to the work area being sampled.

Analytical procedure:

Apparatus:

The following are required for analysis. A GC equipped with an electron capture detector. For this evaluation a Hewlett Packard 5880 Gas Chromatograph equipped with a Nickel 63 High Temperature Electron Capture Detector and a Linearizer was used. A GC column capable of separating the MDA

derivative from the solvent and interferences. A 6 ft x 2 mm ID glass column packed with 3% OV-101 coated on 100/120 Gas Chrom Q or a 25 meter DB-1 or DB-5 capillary column is recommended for this evaluation. An electronic integrator or some other suitable means of measuring peak areas or heights. Small resealable vials with Teflon-lined caps capable of holding 4 mL. A dispenser or pipet for toluene capable of delivering 2.9 mL. Pipets (or repipets with plastic or Teflon tips) capable of delivering 1 mL for the sodium hydroxide and buffer solutions. A repipet capable of delivering 25 micro-L HFAA. Syringes for preparation of standards and injection of standards and samples into a GC. Volumetric flasks and pipets to dilute the pure MDA in preparation of standards. Disposable pipets to transfer the toluene layers after the samples are extracted.

Reagents:
0.5 NaOH prepared from reagent grade NaOH. Toluene, pesticide grade. Burdick and Jackson distilled in glass toluene was used. Heptafluorobutyric acid anhydride (HFAA). HFAA from Pierce Chemical Company was used. pH 7.0 phosphate buffer, prepared from 136 g potassium dihydrogen phosphate and 1 L deionized water. The pH is adjusted to 7.0 with saturated sodium hydroxide solution. 4,4'-methylenedianiline (MDA), reagent grade.

Standard preparation:
Concentrated stock standards are prepared by diluting pure MDA with toluene. Analytical standards are prepared by injecting micro-L amounts of diluted stock standards into vials that contain 2.0 mL toluene. 25 micro-L HFAA are added to each vial and the vials are capped and shaken for 10 seconds. After 10 min, 1 mL of buffer is added to each vial. The vials are recapped and shaken for ten seconds. After allowing the layers to separate, aliquots of the toluene (upper) layers are removed with a syringe and analyzed by GC. Analytical standard concentrations should bracket sample concentrations. Thus, if samples fall out of the range of prepared standards, additional standards must be prepared to ascertain detector response.

Sample preparation:
The sample filters are received in vials containing deionized water. 1 mL of 0.5N NaOH and 2.0 mL toluene are added to each vial. The vials are recapped and shaken for 10 min. After allowing the layers to separate, approximately 1 mL aliquots of the toluene (upper) layers are transferred to separate vials with clean disposable pipets. The toluene layers are treated and analyzed.

Analysis:
GC conditions.
Zone temperatures: Column—220 degrees C. Injector—235 degrees C. Detector—335 degrees C. Gas flows, N_2 Column —30 mL/min He Purge—Column 0.9 mL/min. (capillary) with 30 mL/min. $ArCH_4$ (95/5) make up gas Injection volume: 5.0 uL Column: 6 ft x 1/8 in ID glass, 3% OV-101 on 100/120 Gas Chrom Q or 25 Retention time of MDA derivative: 2.5 to 3.5, depending on column and flow.
Chromatogram. Peak areas or heights are measured by an integrator or other suitable means. A calibration curve is constructed by plotting response (peak areas or heights) of standard injections versus micro-g of MDA per sample. Sample concentrations must be bracketed by standards.

Interferences (analytical):
Any compound that gives an electron capture detector response and has the same general retention time as the HFAA derivative of MDA is a potential interference. Suspected interferences reported to the laboratory with submitted samples by the industrial hygienist must be considered before samples are derivatized. GC parameters may be changed to possibly circumvent interferences. Retention time on a single column is not considered proof of chemical identity. Analyte identity should be confirmed by GC/MS if possible.

Calculations:
The analyte concentration for samples is obtained from the calibration curve in terms of micro-g MDA per sample. The extraction efficiency is 100%. If any MDA is found on the blank, that amount is subtracted from the sample amounts. The air concentrations are calculated using the following formulae. micro-$\mu g/m^3$ = (micro-µg MDA per sample) (1000)/(L of air sampled) ppb = (micro-$\mu g/m^3$) (24.46)/(198.3) = (micro-$\mu g/m^3$)(0.1233) where 24.46 is the molar volume at 25 degrees C. and 760 mm Hg.
Safety precautions (analytical). Avoid skin contact and inhalation of all chemicals. Restrict the use of all chemicals to a fume hood if possible. Wear safety glasses and a lab coat at all times while in the lab area.

[Statutory Authority: Chapter 49.17 RCW. WSR 93-04-111 (Order 92-15), § 296-155-17347, filed 2/3/93, effective 3/15/93.]

WAC 296-155-174 Cadmium. (1) Scope. This standard applies to all occupational exposures to cadmium and cadmium compounds, in all forms, in all construction work where an employee may potentially be exposed to cadmium. Construction work is defined as work involving construction, alteration, and/or repair, including but not limited to the following:

(a) Wrecking, demolition, or salvage of structures where cadmium or materials containing cadmium are present;

(b) Use of cadmium containing-paints and cutting, brazing, burning, grinding, or welding on surfaces that were painted with cadmium-containing paints;

(c) Construction, alteration, repair, maintenance, or renovation of structures, substrates, or portions thereof, that contain cadmium, or materials containing cadmium;

(d) Cadmium welding; cutting and welding cadmium-plated steel; brazing or welding with cadmium alloys;

(e) Installation of products containing cadmium;

(f) Electrical grounding with cadmium-welding, or electrical work using cadmium-coated conduit;

(g) Maintaining or retrofitting cadmium-coated equipment;

(h) Cadmium contamination/emergency cleanup; and

(i) Transportation, disposal, storage, or containment of cadmium or materials containing cadmium on the site or location at which construction activities are performed.

(2) Definitions.

(a) Action level (AL) is defined as an airborne concentration of cadmium of 2.5 micrograms per cubic meter of air (2.5 $\mu g/m^3$), calculated as an 8-hour time-weighted average (TWA).

(b) Authorized person means any person authorized by the employer and required by work duties to be present in regulated areas or any person authorized by WISHA or regulations issued under it to be in regulated areas.

(c) Competent person, in accordance with WAC 296-155-012(4), means a person designated by the employer to act on the employer's behalf who is capable of identifying existing and potential cadmium hazards in the workplace and the proper methods to control them in order to protect workers, and has the authority necessary to take prompt corrective measures to eliminate or control such hazards. The duties of a competent person include at least the following: Determining prior to the performance of work whether cadmium is present in the workplace; establishing, where necessary, regulated areas and assuring that access to and from those areas is limited to authorized employees; assuring the adequacy of any employee exposure monitoring required by this standard; assuring that all employees exposed to air cadmium levels above the PEL wear appropriate personal protective equipment and are trained in the use of appropriate methods of exposure control; assuring that proper hygiene facilities are provided and that workers are trained to use those facilities; and assuring that the engineering controls required by this standard are implemented, maintained in proper operating condition, and functioning properly.

(d) Director means the director of the department of labor and industries or authorized representative.

(e) Employee exposure and similar language referring to the air cadmium level to which an employee is exposed means the exposure to airborne cadmium that would occur if the employee were not using respiratory protective equipment.

(f) Final medical determination is the written medical opinion of the employee's health status by the examining physician under subsection (12)(c) through (l) of this section or, if multiple physician review under subsection (12)(m) of this section or the alternative physician determination under subsection (12)(n) of this section is invoked, it is the final, written medical finding, recommendation or determination that emerges from that process.

(g) High-efficiency particulate air (HEPA) filter means a filter capable of trapping and retaining at least 99.97 percent of mono-dispersed particles of 0.3 micrometers in diameter.

(h) Regulated area means an area demarcated by the employer where an employee's exposure to airborne concentrations of cadmium exceeds, or can reasonably be expected to exceed the permissible exposure limit (PEL).

(i) This section means this cadmium standard.

(3) Permissible exposure limit (PEL). The employer shall assure that no employee is exposed to an airborne concentration of cadmium in excess of five micrograms per cubic meter of air (5 $\mu g/m^3$), calculated as an 8-hour time-weighted average exposure (TWA).

(4) Exposure monitoring.

(a) General.

(i) Prior to the performance of any construction work where employees may be potentially exposed to cadmium, the employer shall establish the applicability of this standard by determining whether cadmium is present in the workplace and whether there is the possibility that employee exposures will be at or above the action level. The employer shall designate a competent person who shall make this determination. Investigation and material testing techniques shall be used, as appropriate, in the determination. Investigation shall include a review of relevant plans, past reports, safety data sheets, and other available records, and consultations with the property owner and discussions with appropriate individuals and agencies.

(ii) Where cadmium has been determined to be present in the workplace, and it has been determined that there is a possibility the employee's exposure will be at or above the action level, the competent person shall identify employees potentially exposed to cadmium at or above the action level.

(iii) Determinations of employee exposure shall be made from breathing-zone air samples that reflect the monitored employee's regular, daily 8-hour TWA exposure to cadmium.

(iv) Eight-hour TWA exposures shall be determined for each employee on the basis of one or more personal breathing-zone air samples reflecting full shift exposure on each shift, for each job classification, in each work area. Where several employees perform the same job tasks, in the same job classification, on the same shift, in the same work area, and the length, duration, and level of cadmium exposures are similar, an employer may sample a representative fraction of the employees instead of all employees in order to meet this requirement. In representative sampling, the employer shall sample the employee(s) expected to have the highest cadmium exposures.

(b) Specific.

(i) Initial monitoring. Except as provided for in (b)(iii) of this subsection, where a determination conducted under (a)(i) of this subsection shows the possibility of employee exposure to cadmium at or above the action level, the employer shall conduct exposure monitoring as soon as practicable that is representative of the exposure for each employee in the workplace who is or may be exposed to cadmium at or above the action level.

(ii) In addition, if the employee periodically performs tasks that may expose the employee to a higher concentration of airborne cadmium, the employee shall be monitored while performing those tasks.

(iii) Where the employer has objective data, as defined in subsection (14)(b) of this section, demonstrating that employee exposure to cadmium will not exceed airborne concentrations at or above the action level under the expected conditions of processing, use, or handling, the employer may rely upon such data instead of implementing initial monitoring.

(iv) Where a determination conducted under (a) or (b) of this subsection is made that a potentially exposed employee is not exposed to airborne concentrations of cadmium at or above the action level, the employer shall make a written record of such determination. The record shall include at least the monitoring data developed under (b)(i) through (iii) of this subsection, where applicable, and shall also include the date of determination, and the name and Social Security number of each employee.

(c) Monitoring frequency (periodic monitoring).

(i) If the initial monitoring or periodic monitoring reveals employee exposures to be at or above the action level, the employer shall monitor at a frequency and pattern needed to assure that the monitoring results reflect with reasonable

accuracy the employee's typical exposure levels, given the variability in the tasks performed, work practices, and environmental conditions on the job site, and to assure the adequacy of respiratory selection and the effectiveness of engineering and work practice controls.

(ii) If the initial monitoring or the periodic monitoring indicates that employee exposures are below the action level and that result is confirmed by the results of another monitoring taken at least seven days later, the employer may discontinue the monitoring for those employees whose exposures are represented by such monitoring.

(d) Additional monitoring. The employer also shall institute the exposure monitoring required under (b)(i) and (c) of this subsection whenever there has been a change in the raw materials, equipment, personnel, work practices, or finished products that may result in additional employees being exposed to cadmium at or above the action level or in employees already exposed to cadmium at or above the action level being exposed above the PEL, or whenever the employer or competent person has any reason to suspect that any other change might result in such further exposure.

(e) Employee notification of monitoring results.

(i) No later than five working days after the receipt of the results of any monitoring performed under this section, the employer shall notify each affected employee individually in writing of the results. In addition, within the same time period, the employer shall post the results of the exposure monitoring in an appropriate location that is accessible to all affected employees.

(ii) Wherever monitoring results indicate that employee exposure exceeds the PEL, the employer shall include in the written notice a statement that the PEL has been exceeded and a description of the corrective action being taken by the employer to reduce employee exposure to or below the PEL.

(f) Accuracy of measurement. The employer shall use a method of monitoring and analysis that has an accuracy of not less than plus or minus 25 percent (± 25%), with a confidence level of 95 percent, for airborne concentrations of cadmium at or above the action level and the permissible exposure limit.

(5) Regulated areas.

(a) Establishment. The employer shall establish a regulated area wherever an employee's exposure to airborne concentrations of cadmium is, or can reasonably be expected to be in excess of the permissible exposure limit (PEL).

(b) Demarcation. Regulated areas shall be demarcated from the rest of the workplace in any manner that adequately establishes and alerts employees of the boundaries of the regulated area, including employees who are or may be incidentally in the regulated areas, and that protects persons outside the area from exposure to airborne concentrations of cadmium in excess of the PEL.

(c) Access. Access to regulated areas shall be limited to authorized persons.

(d) Provision of respirators. Each person entering a regulated area shall be supplied with and required to use a respirator, selected in accordance with subsection (7)(b) of this section.

(e) Prohibited activities. The employer shall assure that employees do not eat, drink, smoke, chew tobacco or gum, or apply cosmetics in regulated areas, or carry the products associated with any of these activities into regulated areas or store such products in those areas.

(6) Methods of compliance.

(a) Compliance hierarchy.

(i) Except as specified in (a)(ii) of this subsection, the employer shall implement engineering and work practice controls to reduce and maintain employee exposure to cadmium at or below the PEL, except to the extent that the employer can demonstrate that such controls are not feasible.

(ii) The requirement to implement engineering controls to achieve the PEL does not apply where the employer demonstrates the following:

(A) The employee is only intermittently exposed; and

(B) The employee is not exposed above the PEL on thirty or more days per year (twelve consecutive months).

(iii) Wherever engineering and work practice controls are not sufficient to reduce employee exposure to or below the PEL, the employer nonetheless shall implement such controls to reduce exposures to the lowest levels achievable. The employer shall supplement such controls with respiratory protection that complies with the requirements of subsection (7) of this section and the PEL.

(iv) The employer shall not use employee rotation as a method of compliance.

(b) Specific operations.

(i) Abrasive blasting. Abrasive blasting on cadmium or cadmium-containing materials shall be conducted in a manner that will provide adequate protection.

(ii) Heating cadmium and cadmium-containing materials. Welding, cutting, and other forms of heating of cadmium or cadmium-containing materials shall be conducted in accordance with the requirements of WAC 296-155-415 and 296-155-420, where applicable.

(c) Prohibitions.

(i) High speed abrasive disc saws and similar abrasive power equipment shall not be used for work on cadmium or cadmium-containing materials unless they are equipped with appropriate engineering controls to minimize emissions, if the exposure levels are above the PEL.

(ii) Materials containing cadmium shall not be applied by spray methods, if exposures are above the PEL, unless employees are protected with supplied-air respirators with full facepiece, hood, helmet, suit, operated in positive pressure mode and measures are instituted to limit overspray and prevent contamination of adjacent areas.

(d) Mechanical ventilation.

(i) When ventilation is used to control exposure, measurements that demonstrate the effectiveness of the system in controlling exposure, such as capture velocity, duct velocity, or static pressure shall be made as necessary to maintain its effectiveness.

(ii) Measurements of the system's effectiveness in controlling exposure shall be made as necessary within five working days of any change in production, process, or control that might result in a significant increase in employee exposure to cadmium.

(iii) Recirculation of air. If air from exhaust ventilation is recirculated into the workplace, the system shall have a high efficiency filter and be monitored to assure effectiveness.

(iv) Procedures shall be developed and implemented to minimize employee exposure to cadmium when maintenance

of ventilation systems and changing of filters is being conducted.

(e) Compliance program.

(i) Where employee exposure to cadmium exceeds the PEL and the employer is required under (a) of this subsection to implement controls to comply with the PEL, prior to the commencement of the job the employer shall establish and implement a written compliance program to reduce employee exposure to or below the PEL. To the extent that engineering and work practice controls cannot reduce exposures to or below the PEL, the employer shall include in the written compliance program the use of appropriate respiratory protection to achieve compliance with the PEL.

(ii) Written compliance programs shall be reviewed and updated as often and as promptly as necessary to reflect significant changes in the employer's compliance status or significant changes in the lowest air cadmium level that is technologically feasible.

(iii) A competent person shall review the comprehensive compliance program initially and after each change.

(iv) Written compliance programs shall be provided upon request for examination and copying to the director, or authorized representatives, affected employees, and designated employee representatives.

(7) Respirator protection.

(a) General. For employees who use respirators required by this section, the employer must provide each employee with an appropriate respirator that complies with the requirements of this section. Respirators must be used during:

(i) Periods necessary to install or implement feasible engineering and work-practice controls when employee exposures exceed the PEL.

(ii) Maintenance and repair activities, and brief or intermittent operations, for which employee exposures exceed the PEL and engineering and work-practice controls are not feasible or are not required.

(iii) Work operations in regulated areas specified in subsection (5) of this section.

(iv) Work operations for which the employer has implemented all feasible engineering and work-practice controls, and such controls are not sufficient to reduce exposures to or below the PEL.

(v) Emergencies.

(vi) Work operations for which an employee, who is exposed to cadmium at or above the action level, requests a respirator.

(vii) Work operations for which engineering controls are not required under (a)(ii) of this subsection to reduce employee exposures that exceed the PEL.

(b) Respirator program.

(i) The employer must develop, implement, and maintain a respiratory protection program as required by chapter 296-842 WAC, except WAC 296-842-14005, which covers each employee required by this chapter to use a respirator.

(ii) If an employee has breathing difficulty during fit testing or respirator use, the employer must provide the employee with a medical examination as required by subsection (12)(f)(ii) of this section to determine if the employee can use a respirator while performing the required duties.

(iii) No employees must use a respirator when, based on their recent medical examination, the examining physician determines that the employee will be unable to continue to function normally while using a respirator. If the physician determines the employee must be limited in, or removed from, their current job because of the employee's inability to use a respirator, the job limitation or removal must be conducted as required by (k) and (l) of this subsection.

(c) Respirator selection. The employer must:

(i) Select and provide the appropriate respirator as specified in this section and WAC 296-842-13005 in the respirator rule.

• Provide employees with full facepiece respirators when they experience eye irritation.

• Make sure high-efficiency particulate air (HEPA) filters or N-, R-, or P-100 series filters are provided for powered air-purifying respirators (PAPRs) and negative-pressure air-purifying respirators.

(ii) The employer shall provide a powered, air-purifying respirator (PAPR) instead of a negative-pressure respirator when an employee entitled to a respirator chooses to use this type of respirator and such a respirator will provide adequate protection to the employee.

(8) Emergency situations. The employer shall develop and implement a written plan for dealing with emergency situations involving substantial releases of airborne cadmium. The plan shall include provisions for the use of appropriate respirators and personal protective equipment. In addition, employees not essential to correcting the emergency situation shall be restricted from the area and normal operations halted in that area until the emergency is abated.

(9) Protective work clothing and equipment.

(a) Provision and use. If an employee is exposed to airborne cadmium above the PEL or where skin or eye irritation is associated with cadmium exposure at any level, the employer shall provide at no cost to the employee, and assure that the employee uses, appropriate protective work clothing and equipment that prevents contamination of the employee and the employee's garments. Protective work clothing and equipment includes, but is not limited to:

(i) Coveralls or similar full-body work clothing;

(ii) Gloves, head coverings, and boots or foot coverings; and

(iii) Face shields, vented goggles, or other appropriate protective equipment that complies with WAC 296-155-215.

(b) Removal and storage.

(i) The employer shall assure that employees remove all protective clothing and equipment contaminated with cadmium at the completion of the work shift and do so only in change rooms provided in accordance with subsection (10)(a) of this section.

(ii) The employer shall assure that no employee takes cadmium-contaminated protective clothing or equipment from the workplace, except for employees authorized to do so for purposes of laundering, cleaning, maintaining, or disposing of cadmium-contaminated protective clothing and equipment at an appropriate location or facility away from the workplace.

(iii) The employer shall assure that contaminated protective clothing and equipment, when removed for laundering, cleaning, maintenance, or disposal, is placed and stored in sealed, impermeable bags or other closed, impermeable con-

tainers that are designed to prevent dispersion of cadmium dust.

(iv) The employer shall assure that containers of contaminated protective clothing and equipment that are to be taken out of the change rooms or the workplace for laundering, cleaning, maintenance or disposal shall bear labels in accordance with subsection (13)(c)(ii) of this section.

(c) Cleaning, replacement, and disposal.

(i) The employer shall provide the protective clothing and equipment required by (a) of this subsection in a clean and dry condition as often as necessary to maintain its effectiveness, but in any event at least weekly. The employer is responsible for cleaning and laundering the protective clothing and equipment required by this subsection to maintain its effectiveness and is also responsible for disposing of such clothing and equipment.

(ii) The employer also is responsible for repairing or replacing required protective clothing and equipment as needed to maintain its effectiveness. When rips or tears are detected while an employee is working they shall be immediately mended, or the worksuit shall be immediately replaced.

(iii) The employer shall prohibit the removal of cadmium from protective clothing and equipment by blowing, shaking, or any other means that disperses cadmium into the air.

(iv) The employer shall assure that any laundering of contaminated clothing or cleaning of contaminated equipment in the workplace is done in a manner that prevents the release of airborne cadmium in excess of the permissible exposure limit prescribed in subsection (3) of this section.

(v) The employer shall inform any person who launders or cleans protective clothing or equipment contaminated with cadmium of the potentially harmful effects of exposure to cadmium, and that the clothing and equipment should be laundered or cleaned in a manner to effectively prevent the release of airborne cadmium in excess of the PEL.

(10) Hygiene areas and practices.

(a) General. For employees whose airborne exposure to cadmium is above the PEL, the employer shall provide clean change rooms, handwashing facilities, showers, and lunchroom facilities that comply with WAC 296-155-140.

(b) Change rooms. The employer shall assure that change rooms are equipped with separate storage facilities for street clothes and for protective clothing and equipment, which are designed to prevent dispersion of cadmium and contamination of the employee's street clothes.

(c) Showers and handwashing facilities.

(i) The employer shall assure that employees whose airborne exposure to cadmium is above the PEL shower during the end of the work shift.

(ii) The employer shall assure that employees who are exposed to cadmium above the PEL wash their hands and faces prior to eating, drinking, smoking, chewing tobacco or gum, or applying cosmetics.

(d) Lunchroom facilities.

(i) The employer shall assure that the lunchroom facilities are readily accessible to employees, that tables for eating are maintained free of cadmium, and that no employee in a lunchroom facility is exposed at any time to cadmium at or above a concentration of 2.5 $\mu g/m^3$.

(ii) The employer shall assure that employees do not enter lunchroom facilities with protective work clothing or equipment unless surface cadmium has been removed from the clothing and equipment by HEPA vacuuming or some other method that removes cadmium dust without dispersing it.

(11) Housekeeping.

(a) All surfaces shall be maintained as free as practicable of accumulations of cadmium.

(b) All spills and sudden releases of material containing cadmium shall be cleaned up as soon as possible.

(c) Surfaces contaminated with cadmium shall, wherever possible, be cleaned by vacuuming or other methods that minimize the likelihood of cadmium becoming airborne.

(d) HEPA-filtered vacuuming equipment or equally effective filtration methods shall be used for vacuuming. The equipment shall be used and emptied in a manner that minimizes the reentry of cadmium into the workplace.

(e) Shoveling, dry or wet sweeping, and brushing may be used only where vacuuming or other methods that minimize the likelihood of cadmium becoming airborne have been tried and found not to be effective.

(f) Compressed air shall not be used to remove cadmium from any surface unless the compressed air is used in conjunction with a ventilation system designed to capture the dust cloud created by the compressed air.

(g) Waste, scrap, debris, bags, containers, personal protective equipment, and clothing contaminated with cadmium and consigned for disposal shall be collected and disposed of in sealed impermeable bags or other closed, impermeable containers. These bags and containers shall be labeled in accordance with subsection (13)(c)(ii) of this section.

(12) Medical surveillance.

(a) General.

(i) Scope.

(A) Currently exposed—The employer shall institute a medical surveillance program for all employees who are or may be exposed at or above the action level and all employees who perform the following tasks, operations, or jobs: Electrical grounding with cadmium-welding; cutting, brazing, burning, grinding, or welding on surfaces that were painted with cadmium-containing paints; electrical work using cadmium-coated conduit; use of cadmium containing paints; cutting and welding cadmium-plated steel; brazing or welding with cadmium alloys; fusing of reinforced steel by cadmium welding; maintaining or retrofitting cadmium-coated equipment; and, wrecking and demolition where cadmium is present. A medical surveillance program will not be required if the employer demonstrates that the employee:

(I) Is not currently exposed by the employer to airborne concentrations of cadmium at or above the action level on thirty or more days per year (twelve consecutive months); and

(II) Is not currently exposed by the employer in those tasks on thirty or more days per year (twelve consecutive months).

(B) Previously exposed—The employer shall also institute a medical surveillance program for all employees who might previously have been exposed to cadmium by the employer prior to the effective date of this section in tasks specified under (a)(i)(A) of this subsection, unless the employer demonstrates that the employee did not in the years prior to the effective date of this section work in those tasks

for the employer with exposure to cadmium for an aggregated total of more than twelve months.

(ii) To determine an employee's fitness for using a respirator, the employer shall provide the limited medical examination specified in (f) of this subsection.

(iii) The employer shall assure that all medical examinations and procedures required by this section are performed by or under the supervision of a licensed physician, who has read and is familiar with the health effects WAC 296-62-07441, Appendix A, the regulatory text of this section, the protocol for sample handling and lab selection in WAC 296-62-07451, Appendix F, and the questionnaire of WAC 296-62-07447, Appendix D.

(iv) The employer shall provide the medical surveillance required by this section, including multiple physician review under (m) of this subsection without cost to employees, and at a time and place that is reasonable and convenient to employees.

(v) The employer shall assure that the collecting and handling of biological samples of cadmium in urine (CdU), cadmium in blood (CdB), and beta-2 microglobulin in urine (B_2-M) taken from employees under this section is done in a manner that assures their reliability and that analysis of biological samples of cadmium in urine (CdU), cadmium in blood (CdB), and beta-2 microglobulin in urine (B_2-M) taken from employees under this section is performed in laboratories with demonstrated proficiency to perform the particular analysis. (See WAC 296-62-07451, Appendix F.)

(b) Initial examination.

(i) For employees covered by medical surveillance under (a)(i) of this subsection, the employer shall provide an initial medical examination. The examination shall be provided to those employees within thirty days after initial assignment to a job with exposure to cadmium or no later than ninety days after the effective date of this section, whichever date is later.

(ii) The initial medical examination shall include:

(A) A detailed medical and work history, with emphasis on: Past, present, and anticipated future exposure to cadmium; any history of renal, cardiovascular, respiratory, hematopoietic, reproductive, and/or musculo-skeletal system dysfunction; current usage of medication with potential nephrotoxic side-effects; and smoking history and current status; and

(B) Biological monitoring that includes the following tests:

(I) Cadmium in urine (CdU), standardized to grams of creatinine (g/Cr);

(II) Beta-2 microglobulin in urine (B_2-M), standardized to grams of creatinine (g/Cr), with pH specified, as described in WAC 296-62-07451, Appendix F; and

(III) Cadmium in blood (CdB), standardized to liters of whole blood (lwb).

(iii) Recent examination: An initial examination is not required to be provided if adequate records show that the employee has been examined in accordance with the requirements of (b)(ii) of this subsection within the past twelve months. In that case, such records shall be maintained as part of the employee's medical record and the prior exam shall be treated as if it were an initial examination for the purposes of (c) and (d) of this subsection.

(c) Actions triggered by initial biological monitoring.

(i) If the results of the biological monitoring tests in the initial examination show the employee's CdU level to be at or below 3 µg/g Cr, B_2-M level to be at or below 300 µg/g Cr and CdB level to be at or below 5 µg/lwb, then:

(A) For employees who are subject to medical surveillance under (a)(i)(A) of this subsection because of current or anticipated exposure to cadmium, the employer shall provide the minimum level of periodic medical surveillance in accordance with the requirements in (d)(i) of this subsection; and

(B) For employees who are subject to medical surveillance under (a)(i)(B) of this subsection because of prior but not current exposure, the employer shall provide biological monitoring for CdU, B_2-M, and CdB one year after the initial biological monitoring and then the employer shall comply with the requirements of (d)(vi) of this subsection.

(ii) For all employees who are subject to medical surveillance under (a)(i) of this subsection, if the results of the initial biological monitoring tests show the level of CdU to exceed 3 µg/g Cr, the level of B_2-M to be in excess of 300 µg/g Cr, or the level of CdB to be in excess of 5 µg/lwb, the employer shall:

(A) Within two weeks after receipt of biological monitoring results, reassess the employee's occupational exposure to cadmium as follows:

(I) Reassess the employee's work practices and personal hygiene;

(II) Reevaluate the employee's respirator use, if any, and the respirator program;

(III) Review the hygiene facilities;

(IV) Reevaluate the maintenance and effectiveness of the relevant engineering controls;

(V) Assess the employee's smoking history and status;

(B) Within thirty days after the exposure reassessment, specified in (c)(ii)(A) of this subsection, take reasonable steps to correct any deficiencies found in the reassessment that may be responsible for the employee's excess exposure to cadmium; and

(C) Within ninety days after receipt of biological monitoring results, provide a full medical examination to the employee in accordance with the requirements of (d)(ii) of this subsection. After completing the medical examination, the examining physician shall determine in a written medical opinion whether to medically remove the employee. If the physician determines that medical removal is not necessary, then until the employee's CdU level falls to or below 3 µg/g Cr, B_2-M level falls to or below 300 µg/g Cr and CdB level falls to or below 5 µg/lwb, the employer shall:

(I) Provide biological monitoring in accordance with (b)(ii)(B) of this subsection on a semiannual basis; and

(II) Provide annual medical examinations in accordance with (d)(ii) of this subsection.

(iii) For all employees who are subject to medical surveillance under (a)(i) of this subsection, if the results of the initial biological monitoring tests show the level of CdU to be in excess of 15 µg/g Cr, or the level of CdB to be in excess of 15 µg/lwb, or the level of B_2-M to be in excess of 1,500 µg/g Cr, the employer shall comply with the requirements of (c)(ii)(A) and (B) of this subsection. Within ninety days after receipt of biological monitoring results, the employer shall

provide a full medical examination to the employee in accordance with the requirements of (d)(ii) of this subsection. After completing the medical examination, the examining physician shall determine in a written medical opinion whether to medically remove the employee. However, if the initial biological monitoring results and the biological monitoring results obtained during the medical examination both show that: CdU exceeds 15 µg/g Cr; or CdB exceeds 15 µg/lwb; or B_2-M exceeds 1500 µ/g Cr, and in addition CdU exceeds 3 µg/g Cr or CdB exceeds 5 µg/liter of whole blood, then the physician shall medically remove the employee from exposure to cadmium at or above the action level. If the second set of biological monitoring results obtained during the medical examination does not show that a mandatory removal trigger level has been exceeded, then the employee is not required to be removed by the mandatory provisions of this section. If the employee is not required to be removed by the mandatory provisions of this section or by the physician's determination, then until the employee's CdU level falls to or below 3 µg/g Cr, B_2-M level falls to or below 300 µg/g Cr and CdB level falls to or below 5 µg/lwb, the employer shall:

(A) Periodically reassess the employee's occupational exposure to cadmium;

(B) Provide biological monitoring in accordance with (b)(ii)(B) of this subsection on a quarterly basis; and

(C) Provide semiannual medical examinations in accordance with (d)(ii) of this subsection.

(iv) For all employees to whom medical surveillance is provided, beginning on January 1, 1999, and in lieu of (c)(iii) of this subsection, whenever the results of initial biological monitoring tests show the employee's CdU level to be in excess of 7 µg/g Cr, or B_2-M level to be in excess of 750 µg/g Cr, or CdB level to be in excess of 10 µg/lwb, the employer shall comply with the requirements of (c)(ii)(A) and (B) of this subsection. Within ninety days after receipt of biological monitoring results, the employer shall provide a full medical examination to the employee in accordance with the requirements of (d)(ii) of this subsection. After completing the medical examination, the examining physician shall determine in a written medical opinion whether to medically remove the employee. However, if the initial biological monitoring results and the biological monitoring results obtained during the medical examination both show that: CdU exceeds 7 µg/g Cr; or CdB exceeds 10 µg/lwb; or B_2-M exceeds 750 µg/g Cr, and in addition CdU exceeds 3 µg/g Cr or CdB exceeds 5 µg/liter of whole blood, then the physician shall medically remove the employee from exposure to cadmium at or above the action level. If the second set of biological monitoring results obtained during the medical examination does not show that a mandatory removal trigger level has been exceeded, then the employee is not required to be removed by the mandatory provisions of this section. If the employee is not required to be removed by the mandatory provisions of this section or by the physician's determination, then until the employee's CdU level falls to or below 3 µg/g Cr, B_2-M level falls to or below 300 µg/g Cr and CdB level falls to or below 5 µg/lwb, the employer shall:

(A) Periodically reassess the employee's occupational exposure to cadmium;

(B) Provide biological monitoring in accordance with (b)(ii)(B) of this subsection on a quarterly basis; and

(C) Provide semiannual medical examinations in accordance with (d)(ii) of this subsection.

(d) Periodic medical surveillance.

(i) For each employee who is covered by medical surveillance under (a)(i)(A) of this subsection because of current or anticipated exposure to cadmium, the employer shall provide at least the minimum level of periodic medical surveillance, which consists of periodic medical examinations and periodic biological monitoring. A periodic medical examination shall be provided within one year after the initial examination required by (b) of this subsection and thereafter at least biennially. Biological sampling shall be provided at least annually either as part of a periodic medical examination or separately as periodic biological monitoring.

(ii) The periodic medical examination shall include:

(A) A detailed medical and work history, or update thereof, with emphasis on: Past, present, and anticipated future exposure to cadmium; smoking history and current status; reproductive history; current use of medications with potential nephrotoxic side-effects; any history of renal, cardiovascular, respiratory, hematopoietic, and/or musculoskeletal system dysfunction; and as part of the medical and work history, for employees who wear respirators, questions 3 through 11 and 25 through 32 in WAC 296-62-07447, Appendix D;

(B) A complete physical examination with emphasis on: Blood pressure, the respiratory system, and the urinary system;

(C) A 14 inch by 17 inch, or a reasonably standard sized posterior-anterior chest X ray (after the initial X ray, the frequency of chest X rays is to be determined by the examining physician);

(D) Pulmonary function tests, including forced vital capacity (FVC) and forced expiratory volume at 1 second (FEV1);

(E) Biological monitoring, as required in (b)(ii)(B) of this subsection;

(F) Blood analysis, in addition to the analysis required under (b)(ii)(B) of this subsection, including blood urea nitrogen, complete blood count, and serum creatinine;

(G) Urinalysis, in addition to the analysis required under (b)(ii)(B) of this subsection, including the determination of albumin, glucose, and total and low molecular weight proteins;

(H) For males over forty years old, prostate palpation, or other at least as effective diagnostic test(s); and

(I) Any additional tests or procedures deemed appropriate by the examining physician.

(iii) Periodic biological monitoring shall be provided in accordance with (b)(ii)(B) of this subsection.

(iv) If the results of periodic biological monitoring or the results of biological monitoring performed as part of the periodic medical examination show the level of the employee's CdU, B_2-M, or CdB to be in excess of the levels specified in (c)(ii) and (iii) of this subsection; or, beginning on January 1, 1999, in excess of the levels specified in (c)(ii) or (iv) of this subsection, the employer shall take the appropriate actions

specified in (c)(ii) through (iv) of this subsection, respectively.

(v) For previously exposed employees under (a)(i)(B) of this subsection:

(A) If the employee's levels of CdU did not exceed 3 µg/g Cr, CdB did not exceed 5 µg/lwb, and B_2-M did not exceed 300 µg/g Cr in the initial biological monitoring tests, and if the results of the follow-up biological monitoring required by (c)(i)(B) of this subsection one year after the initial examination confirm the previous results, the employer may discontinue all periodic medical surveillance for that employee.

(B) If the initial biological monitoring results for CdU, CdB, or B_2-M were in excess of the levels specified in (c)(i) of this subsection, but subsequent biological monitoring results required by (c)(ii) through (iv) of this subsection show that the employee's CdU levels no longer exceed 3 µg/g Cr, CdB levels no longer exceed 5 µg/lwb, and B_2-M levels no longer exceed 300 µg/g Cr, the employer shall provide biological monitoring for CdU, CdB, and B_2-M one year after these most recent biological monitoring results. If the results of the follow-up biological monitoring specified in this section, confirm the previous results, the employer may discontinue all periodic medical surveillance for that employee.

(C) However, if the results of the follow-up tests specified in (d)(v)(A) or (B) of this subsection indicate that the level of the employee's CdU, B_2-M, or CdB exceeds these same levels, the employer is required to provide annual medical examinations in accordance with the provisions of (d)(ii) of this subsection until the results of biological monitoring are consistently below these levels or the examining physician determines in a written medical opinion that further medical surveillance is not required to protect the employee's health.

(vi) A routine, biennial medical examination is not required to be provided in accordance with (c)(i) and (d) of this subsection if adequate medical records show that the employee has been examined in accordance with the requirements of (d)(ii) of this subsection within the past twelve months. In that case, such records shall be maintained by the employer as part of the employee's medical record, and the next routine, periodic medical examination shall be made available to the employee within two years of the previous examination.

(e) Actions triggered by medical examinations. If the results of a medical examination carried out in accordance with this section indicate any laboratory or clinical finding consistent with cadmium toxicity that does not require employer action under (b), (c), or (d) of this subsection, the employer shall take the following steps and continue to take them until the physician determines that they are no longer necessary.

(i) Periodically reassess: The employee's work practices and personal hygiene; the employee's respirator use, if any; the employee's smoking history and status; the respiratory protection program; the hygiene facilities; the maintenance and effectiveness of the relevant engineering controls; and take all reasonable steps to correct the deficiencies found in the reassessment that may be responsible for the employee's excess exposure to cadmium.

(ii) Provide semiannual medical reexaminations to evaluate the abnormal clinical sign(s) of cadmium toxicity until the results are normal or the employee is medically removed; and

(iii) Where the results of tests for total proteins in urine are abnormal, provide a more detailed medical evaluation of the toxic effects of cadmium on the employee's renal system.

(f) Examination for respirator use.

(i) To determine an employee's fitness for respirator use, the employer shall provide a medical examination that includes the elements specified in (f)(i)(A) through (D) of this subsection. This examination shall be provided prior to the employee's being assigned to a job that requires the use of a respirator or no later than ninety days after this section goes into effect, whichever date is later, to any employee without a medical examination within the preceding twelve months that satisfies the requirements of this section.

(A) A detailed medical and work history, or update thereof, with emphasis on: Past exposure to cadmium; smoking history and current status; any history of renal, cardiovascular, respiratory, hematopoietic, and/or musculo-skeletal system dysfunction; a description of the job for which the respirator is required; and questions 3 through 11 and 25 through 32 in WAC 296-62-07447, Appendix D;

(B) A blood pressure test;

(C) Biological monitoring of the employee's levels of CdU, CdB and B_2-M in accordance with the requirements of (b)(ii)(B) of this subsection, unless such results already have been obtained within the twelve months; and

(D) Any other test or procedure that the examining physician deems appropriate.

(ii) After reviewing all the information obtained from the medical examination required in (f)(i) of this subsection, the physician shall determine whether the employee is fit to wear a respirator.

(iii) Whenever an employee has exhibited difficulty in breathing during a respirator fit test or during use of a respirator, the employer, as soon as possible, shall provide the employee with a periodic medical examination in accordance with (d)(ii) of this subsection to determine the employee's fitness to wear a respirator.

(iv) Where the results of the examination required under (f)(i), (ii), or (iii) of this subsection are abnormal, medical limitation or prohibition of respirator use shall be considered. If the employee is allowed to wear a respirator, the employee's ability to continue to do so shall be periodically evaluated by a physician.

(g) Emergency examinations.

(i) In addition to the medical surveillance required in (b) through (f) of this subsection, the employer shall provide a medical examination as soon as possible to any employee who may have been acutely exposed to cadmium because of an emergency.

(ii) The examination shall include the requirements of (d)(ii), of this subsection, with emphasis on the respiratory system, other organ systems considered appropriate by the examining physician, and symptoms of acute overexposure, as identified in Appendix A, WAC 296-62-07441 (2)(b)(i) and (ii) and (4).

(h) Termination of employment examination.

(i) At termination of employment, the employer shall provide a medical examination in accordance with (d)(ii) of this subsection, including a chest X ray where necessary, to any employee to whom at any prior time the employer was required to provide medical surveillance under (a)(i) or (g) of this subsection. However, if the last examination satisfied the requirements of (d)(ii) of this subsection and was less than six months prior to the date of termination, no further examination is required unless otherwise specified in (c) or (e) of this subsection;

(ii) In addition, if the employer has discontinued all periodic medical surveillance under (d)(v) of this subsection, no termination of employment medical examination is required.

(i) Information provided to the physician. The employer shall provide the following information to the examining physician:

(i) A copy of this standard and appendices;

(ii) A description of the affected employee's former, current, and anticipated duties as they relate to the employee's occupational exposure to cadmium;

(iii) The employee's former, current, and anticipated future levels of occupational exposure to cadmium;

(iv) A description of any personal protective equipment, including respirators, used or to be used by the employee, including when and for how long the employee has used that equipment; and

(v) Relevant results of previous biological monitoring and medical examinations.

(j) Physician's written medical opinion.

(i) The employer shall promptly obtain a written, signed, medical opinion from the examining physician for each medical examination performed on each employee. This written opinion shall contain:

(A) The physician's diagnosis for the employee;

(B) The physician's opinion as to whether the employee has any detected medical condition(s) that would place the employee at increased risk of material impairment to health from further exposure to cadmium, including any indications of potential cadmium toxicity;

(C) The results of any biological or other testing or related evaluations that directly assess the employee's absorption of cadmium;

(D) Any recommended removal from, or limitation on the activities or duties of the employee or on the employee's use of personal protective equipment, such as respirators;

(E) A statement that the physician has clearly and carefully explained to the employee the results of the medical examination, including all biological monitoring results and any medical conditions related to cadmium exposure that require further evaluation or treatment, and any limitation on the employee's diet or use of medications.

(ii) The employer shall promptly obtain a copy of the results of any biological monitoring provided by an employer to an employee independently of a medical examination under (b) and (d) of this subsection, and, in lieu of a written medical opinion, an explanation sheet explaining those results.

(iii) The employer shall instruct the physician not to reveal orally or in the written medical opinion given to the employer specific findings or diagnoses unrelated to occupational exposure to cadmium.

(k) Medical removal protection (MRP).

(i) General.

(A) The employer shall temporarily remove an employee from work where there is excess exposure to cadmium on each occasion that medical removal is required under (c), (d), or (f) of this subsection and on each occasion that a physician determines in a written medical opinion that the employee should be removed from such exposure. The physician's determination may be based on biological monitoring results, inability to wear a respirator, evidence of illness, other signs or symptoms of cadmium-related dysfunction or disease, or any other reason deemed medically sufficient by the physician.

(B) The employer shall medically remove an employee in accordance with (k) of this subsection regardless of whether at the time of removal a job is available into which the removed employee may be transferred.

(C) Whenever an employee is medically removed under (k) of this subsection, the employer shall transfer the removed employee to a job where the exposure to cadmium is within the permissible levels specified in subsection (12) of this section as soon as one becomes available.

(D) For any employee who is medically removed under the provisions of (k)(i) of this subsection, the employer shall provide follow-up medical examinations semiannually until, in a written medical opinion, the examining physician determines that either the employee may be returned to his/her former job status or the employee must be permanently removed from excess cadmium exposure.

(E) The employer may not return an employee who has been medically removed for any reason to his/her former job status until a physician determines in a written medical opinion that continued medical removal is no longer necessary to protect the employee's health.

(ii) Where an employee is found unfit to wear a respirator under (f)(ii) of this subsection, the employer shall remove the employee from work where exposure to cadmium is above the PEL.

(iii) Where removal is based upon any reason other than the employee's inability to wear a respirator, the employer shall remove the employee from work where exposure to cadmium is at or above the action level.

(iv) Except as specified in (k)(v) of this subsection, no employee who was removed because his/her level of CdU, CdB and/or B_2-M exceeded the trigger levels in (c) or (d) of this subsection may be returned to work with exposure to cadmium at or above the action level until the employee's levels of CdU fall to or below 3 µg/g Cr, CdB fall to or below 5 µg/lwb, and B_2-M fall to or below 300 µg/g Cr.

(v) However, when in the examining physician's opinion continued exposure to cadmium will not pose an increased risk to the employee's health and there are special circumstances that make continued medical removal an inappropriate remedy, the physician shall fully discuss these matters with the employee, and then in a written determination may return a worker to his/her former job status despite what would otherwise be unacceptably high biological monitoring results. Thereafter and until such time as the employee's bio-

logical monitoring results have decreased to levels where he/she could have been returned to his/her former job status, the returned employee shall continue medical surveillance as if he/she were still on medical removal. Until such time, the employee is no longer subject to mandatory medical removal. Subsequent questions regarding the employee's medical removal shall be decided solely by a final medical determination.

(vi) Where an employer, although not required by this section to do so, removes an employee from exposure to cadmium or otherwise places limitations on an employee due to the effects of cadmium exposure on the employee's medical condition, the employer shall provide the same medical removal protection benefits to that employee under (l) of this subsection as would have been provided had the removal been required under (k) of this subsection.

(l) Medical removal protection benefits.

(i) The employer shall provide medical removal protection benefits to an employee for up to a maximum of eighteen months each time, and while the employee is temporarily medically removed under (k) of this subsection.

(ii) For purposes of this section, the requirement that the employer provide medical removal protection benefits means that the employer shall maintain the total normal earnings, seniority, and all other employee rights and benefits of the removed employee, including the employee's right to his/her former job status, as if the employee had not been removed from the employee's job or otherwise medically limited.

(iii) Where, after eighteen months on medical removal because of elevated biological monitoring results, the employee's monitoring results have not declined to a low enough level to permit the employee to be returned to his/her former job status:

(A) The employer shall make available to the employee a medical examination pursuant to this section in order to obtain a final medical determination as to whether the employee may be returned to his/her former job status or must be permanently removed from excess cadmium exposure; and

(B) The employer shall assure that the final medical determination indicates whether the employee may be returned to his/her former job status and what steps, if any, should be taken to protect the employee's health.

(iv) The employer may condition the provision of medical removal protection benefits upon the employee's participation in medical surveillance provided in accordance with this section.

(m) Multiple physician review.

(i) If the employer selects the initial physician to conduct any medical examination or consultation provided to an employee under this section, the employee may designate a second physician to:

(A) Review any findings, determinations, or recommendations of the initial physician; and

(B) Conduct such examinations, consultations, and laboratory tests as the second physician deems necessary to facilitate this review.

(ii) The employer shall promptly notify an employee of the right to seek a second medical opinion after each occasion that an initial physician provided by the employer conducts a medical examination or consultation pursuant to this section. The employer may condition its participation in, and payment for, multiple physician review upon the employee doing the following within fifteen days after receipt of this notice, or receipt of the initial physician's written opinion, whichever is later:

(A) Informing the employer that he or she intends to seek a medical opinion; and

(B) Initiating steps to make an appointment with a second physician.

(iii) If the findings, determinations, or recommendations of the second physician differ from those of the initial physician, then the employer and the employee shall assure that efforts are made for the two physicians to resolve any disagreement.

(iv) If the two physicians have been unable to quickly resolve their disagreement, then the employer and the employee, through their respective physicians, shall designate a third physician to:

(A) Review any findings, determinations, or recommendations of the other two physicians; and

(B) Conduct such examinations, consultations, laboratory tests, and discussions with the other two physicians as the third physician deems necessary to resolve the disagreement among them.

(v) The employer shall act consistently with the findings, determinations, and recommendations of the third physician, unless the employer and the employee reach an agreement that is consistent with the recommendations of at least one of the other two physicians.

(n) Alternate physician determination. The employer and an employee or designated employee representative may agree upon the use of any alternate form of physician determination in lieu of the multiple physician review provided by (m) of this subsection, so long as the alternative is expeditious and at least as protective of the employee.

(o) Information the employer must provide the employee.

(i) The employer shall provide a copy of the physician's written medical opinion to the examined employee within five working days after receipt thereof.

(ii) The employer shall provide the employee with a copy of the employee's biological monitoring results and an explanation sheet explaining the results within five working days after receipt thereof.

(iii) Within thirty days after a request by an employee, the employer shall provide the employee with the information the employer is required to provide the examining physician under (i) of this subsection.

(p) Reporting. In addition to other medical events that are required to be reported on the OSHA Form No. 200, the employer shall report any abnormal condition or disorder caused by occupational exposure to cadmium associated with employment as specified in Chapter (V)(E) of the Bureau of Labor Statistics Recordkeeping Guidelines for Occupational Injuries and Illnesses.

(13) Communication of cadmium hazards to employees.

(a) Hazard communication. The employer shall include cadmium in the program established to comply with the requirements of WISHA's Hazard Communication Standard (HCS), WAC 296-901-140. The employer shall ensure that each employee has access to labels on containers of cadmium

safety data sheets (SDSs), and is trained in accordance with the provisions of HCS and (d) of this subsection. The employer shall provide information on at least the following hazards: Cancer; lung effects; kidney effects; and acute toxicity effects.

(b) Warning signs.

(i) Warning signs shall be provided and displayed in regulated areas. In addition, warning signs shall be posted at all approaches to regulated areas so that an employee may read the signs and take necessary protective steps before entering the area.

(ii) Warning signs required by (b)(i) of this subsection shall bear the following legend:

DANGER
CADMIUM
MAY CAUSE CANCER
CAUSES DAMAGE TO LUNGS AND KIDNEYS
WEAR RESPIRATORY PROTECTION IN THIS AREA
AUTHORIZED PERSONNEL ONLY

(iii) The employer shall ensure that signs required by this section are illuminated, cleaned, and maintained as necessary so that the legend is readily visible.

(iv) Prior to June 1, 2016, employers may use the following legend in lieu of that specified in (b)(i) of this subsection:

DANGER
CADMIUM
CANCER HAZARD
CAN CAUSE LUNG AND KIDNEY DISEASE
AUTHORIZED PERSONNEL ONLY
RESPIRATORS REQUIRED IN THIS AREA

(c) Warning labels.

(i) Shipping and storage containers containing cadmium or cadmium compounds shall bear appropriate warning labels, as specified in (a) of this subsection.

(ii) The warning labels for containers of cadmium-contaminated protective clothing, equipment, waste, scrap, or debris shall include at least the following information:

DANGER
CONTAINS CADMIUM
MAY CAUSE CANCER
CAUSES DAMAGE TO LUNGS AND KIDNEYS
AVOID CREATING DUST

(iii) Where feasible, installed cadmium products shall have a visible label or other indication that cadmium is present.

(iv) Prior to June 1, 2015, employers may include the following information on shipping and storage containers containing cadmium, cadmium compounds, or cadmium-contaminated clothing, equipment, waste, scrap, or debris in lieu of the labeling requirements specified in (c)(i) and (ii) of this subsection:

DANGER
CONTAINS CADMIUM
CANCER HAZARD
AVOID CREATING DUST
CAN CAUSE LUNG AND KIDNEY DISEASE

(d) Employee information and training.

(i) The employer shall institute a training program for all employees who are potentially exposed to cadmium, assure employee participation in the program, and maintain a record of the contents of such program.

(ii) Training shall be provided prior to or at the time of initial assignment to a job involving potential exposure to cadmium and at least annually thereafter.

(iii) The employer shall make the training program understandable to the employee and shall assure that each employee is informed of the following:

(A) The health hazards associated with cadmium exposure, with special attention to the information incorporated in WAC 296-62-07441, Appendix A;

(B) The quantity, location, manner of use, release, and storage of cadmium in the workplace and the specific nature of operations that could result in exposure to cadmium, especially exposures above the PEL;

(C) The engineering controls and work practices associated with the employee's job assignment;

(D) The measures employees can take to protect themselves from exposure to cadmium, including modification of such habits as smoking and personal hygiene, and specific procedures the employer has implemented to protect employees from exposure to cadmium such as appropriate work practices, emergency procedures, and the provision of personal protective equipment;

(E) The purpose, proper selection, fitting, proper use, and limitations of respirators and protective clothing;

(F) The purpose and a description of the medical surveillance program required by subsection (12) of this section;

(G) The contents of this section and its appendices; and

(H) The employee's rights of access to records under chapter 296-62 WAC, Part B.

(iv) Additional access to information and training program and materials.

(A) The employer shall make a copy of this section and its appendices readily available to all affected employees and shall provide a copy without cost if requested.

(B) Upon request, the employer shall provide to the director or authorized representative, all materials relating to the employee information and the training program.

(e) Multiemployer workplace. In a multiemployer workplace, an employer who produces, uses, or stores cadmium in a manner that may expose employees of other employers to cadmium shall notify those employers of the potential hazard in accordance with WAC 296-901-140 of the hazard communication standard.

(14) Recordkeeping.

(a) Exposure monitoring.

(i) The employer shall establish and keep an accurate record of all air monitoring for cadmium in the workplace.

(ii) This record shall include at least the following information:

(A) The monitoring date, shift, duration, air volume, and results in terms of an eight-hour TWA of each sample taken, and if cadmium is not detected, the detection level;

(B) The name, Social Security number, and job classification of all employees monitored and of all other employees whose exposures the monitoring result is intended to represent, including, where applicable, a description of how it was determined that the employee's monitoring result could be taken to represent other employee's exposures;

(C) A description of the sampling and analytical methods used and evidence of their accuracy;

(D) The type of respiratory protective device, if any, worn by the monitored employee and by any other employee whose exposure the monitoring result is intended to represent;

(E) A notation of any other conditions that might have affected the monitoring results;

(F) Any exposure monitoring or objective data that were used and the levels.

(iii) The employer shall maintain this record for at least thirty years, in accordance with chapter 296-802 WAC.

(iv) The employer shall also provide a copy of the results of an employee's air monitoring prescribed in subsection (4) of this section to an industry trade association and to the employee's union, if any, or, if either of such associations or unions do not exist, to another comparable organization that is competent to maintain such records and is reasonably accessible to employers and employees in the industry.

(b) Objective data for exemption from requirement for initial monitoring.

(i) For purposes of this section, objective data are information demonstrating that a particular product or material containing cadmium or a specific process, operation, or activity involving cadmium cannot release dust or fumes in concentrations at or above the action level even under the worst-case release conditions. Objective data can be obtained from an industry-wide study or from laboratory product test results from manufacturers of cadmium-containing products or materials. The data the employer uses from an industry-wide survey must be obtained under workplace conditions closely resembling the processes, types of material, control methods, work practices, and environmental conditions in the employer's current operations.

(ii) The employer shall maintain the record for at least 30 years of the objective data relied upon.

(c) Medical surveillance.

(i) The employer shall establish and maintain an accurate record for each employee covered by medical surveillance under (a)(i) of this subsection.

(ii) The record shall include at least the following information about the employee:

(A) Name, Social Security number, and description of duties;

(B) A copy of the physician's written opinions and of the explanation sheets for biological monitoring results;

(C) A copy of the medical history, and the results of any physical examination and all test results that are required to be provided by this section, including biological tests, X rays, pulmonary function tests, etc., or that have been obtained to further evaluate any condition that might be related to cadmium exposure;

(D) The employee's medical symptoms that might be related to exposure to cadmium; and

(E) A copy of the information provided to the physician as required by subsection (12)(i) of this section.

(iii) The employer shall assure that this record is maintained for the duration of employment plus thirty years, in accordance with chapter 296-802 WAC.

(iv) At the employee's request, the employer shall promptly provide a copy of the employee's medical record, or update as appropriate, to a medical doctor or a union specified by the employee.

(d) Training. The employer shall certify that employees have been trained by preparing a certification record which includes the identity of the person trained, the signature of the employer or the person who conducted the training, and the date the training was completed. The certification records shall be prepared at the completion of training and shall be maintained on file for one year beyond the date of training of that employee.

(e) Availability.

(i) Except as otherwise provided for in this section, access to all records required to be maintained by (a) through (d) of this subsection shall be in accordance with the provisions of chapter 296-802 WAC.

(ii) Within fifteen days after a request, the employer shall make an employee's medical records required to be kept by (c) of this subsection available for examination and copying to the subject employee, to designated representatives, to anyone having the specific written consent of the subject employee, and after the employee's death or incapacitation, to the employee's family members.

(f) Transfer of records. Whenever an employer ceases to do business and there is no successor employer or designated organization to receive and retain records for the prescribed period, the employer shall comply with the requirements concerning transfer of records set forth in chapter 296-802 WAC.

(15) Observation of monitoring.

(a) Employee observation. The employer shall provide affected employees or their designated representatives an opportunity to observe any monitoring of employee exposure to cadmium.

(b) Observation procedures. When observation of monitoring requires entry into an area where the use of protective clothing or equipment is required, the employer shall provide the observer with that clothing and equipment and shall assure that the observer uses such clothing and equipment and complies with all other applicable safety and health procedures.

(16) Appendices.

(a) Compliance with the fit testing requirements in WAC 296-842-15005 are mandatory.

(b) Except where portions of WAC 296-62-07441, 296-62-07443, 296-62-07447, 296-62-07449, and 296-62-07451, Appendices A, B, D, E, and F, respectively, to this section are expressly incorporated in requirements of this section, these appendices are purely informational and are not intended to create any additional obligations not otherwise imposed or to detract from any existing obligations.

[Statutory Authority: RCW 49.17.010, 49.17.040, 49.17.050, 49.17.060 and 29 C.F.R. 1910 Subpart Z. WSR 14-07-086, § 296-155-174, filed 3/18/14, effective 5/1/14. Statutory Authority: RCW 49.17.010, 49.17.040, 49.17.050, 49.17.060. WSR 09-15-145, § 296-155-174, filed 7/21/09, effective 9/1/09; WSR 07-05-072, § 296-155-174, filed 2/20/07, effective 4/1/07; WSR 05-03-093, § 296-155-174, filed 1/18/05, effective 3/1/05; WSR 04-10-026, § 296-155-174, filed 4/27/04, effective 8/1/04. Statutory Authority: RCW 49.17.010, [49.17].040, and [49.17].050. WSR 01-11-038, § 296-155-174, filed 5/9/01, effective 9/1/01; WSR 99-10-071, § 296-155-174, filed 5/4/99, effective 9/1/99. Statutory Authority: Chapter 49.17 RCW. WSR 94-15-096 (Order 94-07), § 296-155-174, filed 7/20/94, effective 9/20/94; WSR 93-21-075 (Order 93-06), § 296-155-174, filed 10/20/93, effective 12/1/93; WSR 93-07-044 (Order 93-01), § 296-155-174, filed 3/13/93, effective 4/27/93.]

WAC 296-155-176 Lead.

[Statutory Authority: Chapter 49.17 RCW. WSR 93-22-054 (Order 93-07), § 296-155-176, filed 10/29/93, effective 12/10/93.]

WAC 296-155-17603 Scope. WAC 296-155-176, Lead, applies to all construction work where an employee may be occupationally exposed to lead. All construction work excluded from coverage in the general industry standard for lead by WAC 296-62-07521 (1)(b) is covered by this standard. Construction work is defined as work for construction, alteration and/or repair, including painting and decorating. It includes but is not limited to the following:

(1) Demolition or salvage of structures where lead or materials containing lead are present;

(2) Removal or encapsulation of materials containing lead;

(3) New construction, alteration, repair, or renovation of structures, substrates, or portions thereof, that contain lead, or materials containing lead;

(4) Installation of products containing lead;

(5) Lead contamination/emergency cleanup;

(6) Transportation, disposal, storage, or containment of lead or materials containing lead on the site or location at which construction activities are performed; and

(7) Maintenance operations associated with the construction activities described in this section.

[Statutory Authority: Chapter 49.17 RCW. WSR 93-22-054 (Order 93-07), § 296-155-17603, filed 10/29/93, effective 12/10/93.]

WAC 296-155-17605 Definitions. (1) Action level means employee exposure, without regard to the use of respirators, to an airborne concentration of lead of 30 micrograms per cubic meter of air (30 $\mu g/m^3$) calculated as an 8-hour time-weighted average (TWA).

(2) Competent person means one who is capable of identifying existing and predictable lead hazards in the surroundings or working conditions and who has authorization to take prompt corrective measures to eliminate them.

(3) Director means the director of labor and industries, or his/her designated representative.

(4) Lead means metallic lead, all inorganic lead compounds, and organic lead soaps. Excluded from this definition are all other organic lead compounds.

(5) This section means WAC 296-155-176 through 296-155-17656.

[Statutory Authority: Chapter 49.17 RCW. WSR 93-22-054 (Order 93-07), § 296-155-17605, filed 10/29/93, effective 12/10/93.]

WAC 296-155-17607 Permissible exposure limit. (1) The employer shall assure that no employee is exposed to lead at concentrations greater than fifty micrograms per cubic meter of air (50 $\mu g/m^3$) averaged over an 8-hour period.

(2) If an employee is exposed to lead for more than 8 hours in any work day the employees' allowable exposure, as a time weighted average (TWA) for that day, shall be reduced according to the following formula:

Allowable employee exposure (in $\mu g/m^3$) = 400 divided by hours worked in the day.

(3) When respirators are used to limit employee exposure as required by this section and all the requirements of WAC 296-155-17611(1) and 296-155-17613 have been met, employee exposure may be considered to be at the level provided by the protection factor of the respirator for those periods the respirator is worn. Those periods may be averaged with exposure levels during periods when respirators are not worn to determine the employee's daily TWA exposure.

[Statutory Authority: Chapter 49.17 RCW. WSR 93-22-054 (Order 93-07), § 296-155-17607, filed 10/29/93, effective 12/10/93.]

WAC 296-155-17609 Exposure assessment. (1) General.

(a) Each employer who has a workplace or operation covered by this standard shall initially determine if any employee may be exposed to lead at or above the action level.

(b) For the purposes of this section, employee exposure is that exposure which would occur if the employee were not using a respirator.

(c) With the exception of monitoring under subsection (3) of this section, where monitoring is required by this standard, the employer shall collect personal samples representative of a full shift including at least one sample for each job classification in each work area either for each shift or for the shift with the highest exposure level.

(d) Full shift personal samples shall be representative of the monitored employee's regular, daily exposure to lead.

(2) Protection of employees during assessment of exposure.

(a) With respect to the lead related tasks listed in this subdivision, where lead is present, until the employer performs an employee exposure assessment as required in this section and documents that the employee performing any of the listed tasks is not exposed above the PEL, the employer shall treat the employee as if the employee were exposed above the PEL, and not in excess of ten (10) times the PEL, and shall implement employee protective measures prescribed in subdivision (e) of this subsection. The tasks covered by this requirement are:

(i) Where lead containing coatings or paint are present: Manual demolition of structures (e.g, dry wall), manual scraping, manual sanding, heat gun applications, and power tool cleaning with dust collection systems;

(ii) Spray painting with lead paint.

(b) In addition, with regard to tasks not listed in subdivision (a), where the employer has any reason to believe that an employee performing the task may be exposed to lead in excess of the PEL, until the employer performs an employee exposure assessment as required by this section and documents that the employee's lead exposure is not above the PEL the employer shall treat the employee as if the employee were exposed above the PEL and shall implement employee protective measures as prescribed in subdivision (e) of this subsection.

(c) With respect to the tasks listed in this subdivision, where lead is present, until the employer performs an employee exposure assessment as required in this section, and documents that the employee performing any of the listed tasks is not exposed in excess of 500 $\mu g/m^3$, the employer shall treat the employee as if the employee were exposed to lead in excess of 500 $\mu g/m^3$ and shall implement employee protective measures as prescribed in subdivision (e) of this subsection. Where the employer does establish that the employee is exposed to levels of lead below 500 $\mu g/m^3$,

the employer may provide the exposed employee with the appropriate respirator prescribed for such use at such lower exposures, in accordance with Table 1 of WAC 296-155-17613. The tasks covered by this requirement are:

(i) Using lead containing mortar; lead burning;

(ii) Where lead containing coatings or paint are present: Rivet busting; power tool cleaning without dust collection systems; cleanup activities where dry expendable abrasives are used; and abrasive blasting enclosure movement and removal.

(d) With respect to the tasks listed in this subdivision, where lead is present, until the employer performs an employee exposure assessment as required in this section and documents that the employee performing any of the listed tasks is not exposed to lead in excess of 2,500 $\mu g/m^3$ (50xPEL), the employer shall treat the employee as if the employee were exposed to lead in excess of 2,500 $\mu g/m^3$ and shall implement employee protective measures as prescribed in (e) of this subsection. Where the employer does establish that the employee is exposed to levels of lead below 2,500 $\mu g/m^3$, the employer may provide the exposed employee with the appropriate respirator prescribed for use at such lower exposures, in accordance with Table I of this WAC 296-155-17613. Protection described in this section is required where lead containing coatings or paint are present on structures when performing:

(i) Abrasive blasting;

(ii) Welding;

(iii) Cutting; and

(iv) Torch burning.

(e) Until the employer performs an employee exposure assessment as required by this section and determines actual employee exposure, the employer shall provide to employees performing the tasks described in (a) through (d) of this subsection with interim protection as follows:

(i) Appropriate respiratory protection in accordance with WAC 296-155-17613.

(ii) Appropriate personal protective clothing and equipment in accordance with WAC 296-155-17615.

(iii) Change areas in accordance with WAC 296-155-17619(2).

(iv) Hand washing facilities in accordance with WAC 296-155-17619(5).

(v) Biological monitoring in accordance with WAC 296-155-17621 (1)(a), to consist of blood sampling and analysis for lead and zinc protoporphyrin levels, and

(vi) Training as required by WAC 296-155-17625 (1)(a) regarding WAC 296-901-140, Hazard communication; training as required by WAC 296-155-17625 (2)(c), regarding use of respirators; and training in accordance with WAC 296-155-100.

(3) Basis of initial determination.

(a) Except as provided by (c) and (d) of this subsection the employer shall monitor employee exposures and shall base initial determinations on the employee exposure monitoring results and any of the following, relevant considerations:

(i) Any information, observations, or calculations which would indicate employee exposure to lead;

(ii) Any previous measurements of airborne lead; and

(iii) Any employee complaints of symptoms which may be attributable to exposure to lead.

(b) Monitoring for the initial determination where performed may be limited to a representative sample of the exposed employees who the employer reasonably believes are exposed to the greatest airborne concentrations of lead in the workplace.

(c) Where the employer has previously monitored for lead exposures, and the data were obtained within the past twelve months during work operations conducted under workplace conditions closely resembling the processes, type of material, control methods, work practices, and environmental conditions used and prevailing in the employer's current operations, the employer may rely on such earlier monitoring results to satisfy the requirements of subdivision (a) of this subsection and subsection (5) of this section if the sampling and analytical methods meet the accuracy and confidence levels of subsection (9) of this section.

(d) Where the employer has objective data, demonstrating that a particular product or material containing lead or a specific process, operation or activity involving lead cannot result in employee exposure to lead at or above the action level during processing, use, or handling, the employer may rely upon such data instead of implementing initial monitoring.

(i) The employer shall establish and maintain an accurate record documenting the nature and relevancy of objective data as specified in WAC 296-155-17629(4), where used in assessing employee exposure in lieu of exposure monitoring.

(ii) Objective data, as described in subdivision (d) of this subsection, is not permitted to be used for exposure assessment in connection with subsection (2) of this section.

(4) Positive initial determination and initial monitoring.

(a) Where a determination conducted under subsections (1), (2) and (3) of this section shows the possibility of any employee exposure at or above the action level the employer shall conduct monitoring which is representative of the exposure for each employee in the workplace who is exposed to lead.

(b) Where the employer has previously monitored for lead exposure, and the data were obtained within the past twelve months during work operations conducted under workplace conditions closely resembling the processes, type of material, control methods, work practices, and environmental conditions used and prevailing in the employer's current operations, the employer may rely on such earlier monitoring results to satisfy the requirements of (a) of this subsection if the sampling and analytical methods meet the accuracy and confidence levels of subsection (9) of this section.

(5) Negative initial determination. Where a determination, conducted under subsections (1), (2), and (3) of this section is made that no employee is exposed to airborne concentrations of lead at or above the action level the employer shall make a written record of such determination. The record shall include at least the information specified in subsection (3)(a) of this section and shall also include the date of determination, location within the worksite, and the name and Social Security number of each employee monitored.

(6) Frequency.

(a) If the initial determination reveals employee exposure to be below the action level further exposure determina-

tion need not be repeated except as otherwise provided in subsection (7) of this section.

(b) If the initial determination or subsequent determination reveals employee exposure to be at or above the action level but at or below the PEL the employer shall perform monitoring in accordance with this section at least every six months. The employer shall continue monitoring at the required frequency until at least two consecutive measurements, taken at least seven days apart, are below the action level at which time the employer may discontinue monitoring for that employee except as otherwise provided in subsection (7) of this section.

(c) If the initial determination reveals that employee exposure is above the PEL the employer shall perform monitoring quarterly. The employer shall continue monitoring at the required frequency until at least two consecutive measurements, taken at least seven days apart, are at or below the PEL but at or above the action level at which time the employer shall repeat monitoring for that employee at the frequency specified in subdivision (b) of this subsection, except as otherwise provided in subsection (7) of this section. The employer shall continue monitoring at the required frequency until at least two consecutive measurements, taken at least seven days apart, are below the action level at which time the employer may discontinue monitoring for that employee except as otherwise provided in subsection (7) of this section.

(7) Additional exposure assessments. Whenever there has been a change of equipment, process, control, personnel or a new task has been initiated that may result in additional employees being exposed to lead at or above the action level or may result in employees already exposed at or above the action level being exposed above the PEL, the employer shall conduct additional monitoring in accordance with this section.

(8) Employee notification.

(a) Within five working days after completion of the exposure assessment the employer shall notify each employee in writing of the results which represent that employee's exposure.

(b) Whenever the results indicate that the representative employee exposure, without regard to respirators, is at or above the PEL the employer shall include in the written notice a statement that the employees exposure was at or above that level and a description of the corrective action taken or to be taken to reduce exposure to below that level.

(9) Accuracy of measurement. The employer shall use a method of monitoring and analysis which has an accuracy (to a confidence level of ninety-five percent) of not less than plus or minus twenty-five percent for airborne concentrations of lead equal to or greater than 30 $\mu g/m^3$.

[Statutory Authority: RCW 49.17.010, 49.17.040, 49.17.050, 49.17.060 and 29 C.F.R. 1910 Subpart Z. WSR 14-07-086, § 296-155-17609, filed 3/18/14, effective 5/1/14. Statutory Authority: RCW 49.17.010, [49.17].040, and [49.17].050. WSR 01-11-038, § 296-155-17609, filed 5/9/01, effective 9/1/01. Statutory Authority: Chapter 49.17 RCW. WSR 93-22-054 (Order 93-07), § 296-155-17609, filed 10/29/93, effective 12/10/93.]

WAC 296-155-17611 Methods of compliance. (1) Engineering and work practice controls. The employer shall implement engineering and work practice controls, including administrative controls, to reduce and maintain employee exposure to lead to or below the permissible exposure limit to the extent that such controls are feasible. Wherever all feasible engineering and work practices controls that can be instituted are not sufficient to reduce employee exposure to or below the permissible exposure limit prescribed in WAC 296-155-17607, the employer shall nonetheless use them to reduce employee exposure to the lowest feasible level and shall supplement them by the use of respiratory protection that complies with the requirements of WAC 296-155-17613.

(2) Compliance program.

(a) Prior to commencement of the job each employer shall establish and implement a written compliance program to achieve compliance with WAC 296-155-17607.

(b) Written plans for these compliance programs shall include at least the following:

(i) A description of each activity in which lead is emitted; e.g., equipment used, material involved, controls in place, crew size, employee job responsibilities, operating procedures and maintenance practices;

(ii) A description of the specific means that will be employed to achieve compliance and, where engineering controls are required engineering plans and studies used to determine methods selected for controlling exposure to lead;

(iii) A report of the technology considered in meeting the PEL;

(iv) Air monitoring data which documents the source of lead emissions;

(v) A detailed schedule for implementation of the program, including documentation such as copies of purchase orders for equipment, construction contracts, etc.;

(vi) A work practice program which includes under requirements in WAC 296-155-17615, 296-155-17617, and 296-155-17619, and incorporates other relevant work practices such as those specified in subsection (5) of this section;

(vii) An administrative control schedule required by subsection (4) of this section, if applicable;

(viii) Other relevant information.

(c) The compliance program shall provide for frequent and regular inspections of job sites, materials, and equipment to be made by a competent person.

(d) Written programs shall be submitted upon request to any affected employee or authorized employee representatives, and the director, and shall be available at the worksite for examination and copying by the director.

(e) Written programs shall be revised and updated at least every six months to reflect the current status of the program.

(3) Mechanical ventilation. When ventilation is used to control lead exposure, the employer shall evaluate the mechanical performance of the system in controlling exposure as necessary to maintain its effectiveness.

(4) Administrative controls. If administrative controls are used as a means of reducing employees TWA exposure to lead, the employer shall establish and implement a job rotation schedule which includes:

(a) Name or identification number of each affected employee;

(b) Duration and exposure levels at each job or work station where each affected employee is located; and

(c) Any other information which may be useful in assessing the reliability of administrative controls to reduce exposure to lead.

(5) The employer shall ensure that, to the extent relevant, employees follow good work practices such as described in Appendix B, WAC 296-155-17652.

[Statutory Authority: Chapter 49.17 RCW. WSR 93-22-054 (Order 93-07), § 296-155-17611, filed 10/29/93, effective 12/10/93.]

WAC 296-155-17613 Respiratory protection. (1) General. For employees who use respirators required by WAC 296-155-176, the employer must provide each employee with an appropriate respirator that complies with the requirements of this section. Respirators must be used during:

(a) Periods when an employee's exposure to lead exceeds the PEL.

(b) Work operations for which engineering controls and work-practices are not sufficient to reduce employee exposures to or below the PEL.

(c) Periods when an employee requests a respirator.

(d) Periods when respirators are required to provide interim protection of employees while they perform the operations as specified in WAC 296-155-17609(2).

(2) Respirator program.

(a) The employer must develop, implement, and maintain a respiratory protection program as required by chapter 296-842 WAC, Respirators, which covers each employee required by this chapter to use a respirator.

(b) If an employee has breathing difficulty during fit testing or respirator use, the employer must provide the employee with a medical examination as required by WAC 296-155-17621 (3)(a)(ii) to determine whether or not the employee can use a respirator while performing the required duty.

(3) Respirator selection. The employer must:

(a) Select and provide for employees appropriate respirators according to this section and WAC 296-842-13005 in the respirator rule.

(b) Provide employees with a powered air-purifying respirator (PAPR) when an employee chooses to use a PAPR and it provides adequate protection to the employee.

(c) Provide employees with full facepiece respirators instead of half facepiece respirators for protection against lead aerosols that may cause eye or skin irritation at the use concentration.

(d) Provide HEPA filters or N-, R-, or P-100 filters for powered air-purifying respirators (PAPRs) and negative-pressure air-purifying respirators.

[Statutory Authority: RCW 49.17.010, 49.17.040, 49.17.050, 49.17.060. WSR 09-15-145, § 296-155-17613, filed 7/21/09, effective 9/1/09; WSR 07-05-072, § 296-155-17613, filed 2/20/07, effective 4/1/07; WSR 05-03-093, § 296-155-17613, filed 1/18/05, effective 3/1/05. Statutory Authority: RCW 49.17.010, [49.17].040 and [49.17].050. WSR 99-10-071, § 296-155-17613, filed 5/4/99, effective 9/1/99. Statutory Authority: Chapter 49.17 RCW. WSR 93-22-054 (Order 93-07), § 296-155-17613, filed 10/29/93, effective 12/10/93.]

WAC 296-155-17615 Protective work clothing and equipment. (1) Provision and use. Where an employee is exposed to lead above the PEL without regard to the use of respirators, where employees are exposed to lead compounds which may cause skin or eye irritation (e.g., lead arsenate, lead azide), and as protection for employees performing tasks as specified in WAC 296-155-17609(2), the employer shall provide at no cost to the employee and assure that the employee uses appropriate protective work clothing and equipment that prevents contamination of the employee and the employee's garments such as, but not limited to:

(a) Coveralls or similar full-body work clothing;

(b) Gloves, hats, and shoes or disposable shoe coverlets; and

(c) Face shields, vented goggles, or other appropriate protective equipment which complies with WAC 296-800-160.

(2) Cleaning and replacement.

(a) The employer shall provide the protective clothing required in subsection (1) of this section in a clean and dry condition at least weekly, and daily to employees whose exposure levels without regard to a respirator are over 200 $\mu g/m^3$ of lead as an 8-hour TWA.

(b) The employer shall provide for the cleaning, laundering, and disposal of protective clothing and equipment required by subsection (1) of this section.

(c) The employer shall repair or replace required protective clothing and equipment as needed to maintain their effectiveness.

(d) The employer shall assure that all protective clothing is removed at the completion of a work shift only in change areas provided for that purpose as prescribed in WAC 296-155-17619(2).

(e) The employer shall assure that contaminated protective clothing which is to be cleaned, laundered, or disposed of, is placed in a closed container in the change area which prevents dispersion of lead outside the container.

(f) The employer shall inform in writing any person who cleans or launders protective clothing or equipment of the potentially harmful effects of exposure to lead.

(g) The employer shall ensure that the containers of contaminated protective clothing and equipment required under (e) of this subsection are labeled as follows:

DANGER: CLOTHING AND EQUIPMENT CONTAMINATED WITH LEAD.
MAY DAMAGE FERTILITY OR THE UNBORN CHILD.
CAUSES DAMAGE TO THE CENTRAL NERVOUS SYSTEM.
DO NOT EAT, DRINK OR SMOKE WHEN HANDLING.
DO NOT REMOVE DUST BY BLOWING OR SHAKING.
DISPOSE OF LEAD CONTAMINATED WASH WATER IN ACCORDANCE WITH
APPLICABLE LOCAL, STATE, OR FEDERAL REGULATIONS.

(h) Prior to June 1, 2015, employers may include the following information on bags or containers of contaminated protective clothing and equipment required under (e) of this subsection in lieu of the labeling requirements stated above in this section:

Caution: Clothing contaminated with lead. Do not remove dust by blowing or shaking. Dispose of lead contaminated wash water in accordance with applicable local, state, or federal regulations.

(i) The employer shall prohibit the removal of lead from protective clothing or equipment by blowing, shaking, or any other means which disperses lead into the air.

[Statutory Authority: RCW 49.17.010, 49.17.040, 49.17.050, 49.17.060 and 29 C.F.R. 1910 Subpart Z. WSR 14-07-086, § 296-155-17615, filed 3/18/14, effective 5/1/14. Statutory Authority: RCW 49.17.010, [49.17].040, and [49.17].050. WSR 01-11-038, § 296-155-17615, filed 5/9/01, effective 9/1/01. Statutory Authority: Chapter 49.17 RCW. WSR 93-22-054 (Order 93-07), § 296-155-17615, filed 10/29/93, effective 12/10/93.]

WAC 296-155-17617 Housekeeping. (1) All surfaces shall be maintained as free as practicable of accumulations of lead.

(2) Clean-up of floors and other surfaces where lead accumulates shall wherever possible, be cleaned by vacuuming or other methods that minimize the likelihood of lead becoming airborne.

(3) Shoveling, dry or wet sweeping, and brushing may be used only where vacuuming or other equally effective methods have been tried and found not to be effective.

(4) Where vacuuming methods are selected, the vacuums shall be equipped with HEPA filters and used and emptied in a manner which minimizes the reentry of lead into the workplace.

(5) Compressed air shall not be used to remove lead from any surface unless the compressed air is used in conjunction with a ventilation system designed to capture the airborne dust created by the compressed air.

[Statutory Authority: Chapter 49.17 RCW. WSR 93-22-054 (Order 93-07), § 296-155-17617, filed 10/29/93, effective 12/10/93.]

WAC 296-155-17619 Hygiene facilities and practices. (1) The employer shall assure that in areas where employees are exposed to lead above the PEL without regard to the use of respirators, food or beverage is not present or consumed, tobacco products are not present or used, and cosmetics are not applied.

(2) Change areas.

(a) The employer shall provide clean change areas for employees whose airborne exposure to lead is above the PEL, and as protection for employees performing tasks as specified in WAC 296-155-17609(2), without regard to the use of respirators.

(b) The employer shall assure that change areas are equipped with separate storage facilities for protective work clothing and equipment and for street clothes which prevent cross-contamination.

(c) The employer shall assure that employees do not leave the workplace wearing any protective clothing or equipment that is required to be worn during the work shift.

(3) Showers.

(a) The employer shall provide shower facilities, where feasible, for use by employees whose airborne exposure to lead is above the PEL.

(b) The employer shall assure, where shower facilities are available, that employees shower at the end of the work shift and shall provide an adequate supply of cleansing agents and towels for use by affected employees.

(4) Eating facilities.

(a) The employer shall provide lunchroom facilities or eating areas for employees whose airborne exposure to lead is above the PEL, without regard to the use of respirators.

(b) The employer shall assure that lunchroom facilities or eating areas are as free as practicable from lead contamination and are readily accessible to employees.

(c) The employer shall assure that employees whose airborne exposure to lead is above the PEL, without regard to the use of a respirator, wash their hands and face prior to eating, drinking, smoking or applying cosmetics.

(d) The employer shall assure that employees do not enter lunchroom facilities or eating areas with protective work clothing or equipment unless surface lead dust has been removed by vacuuming, downdraft booth, or other cleaning method that limits dispersion of lead dust.

(5) Hand washing facilities.

(a) The employer shall provide adequate handwashing facilities for use by employees exposed to lead in accordance with WAC 296-155-140.

(b) Where showers are not provided the employer shall assure that employees wash their hands and face at the end of the work-shift.

[Statutory Authority: Chapter 49.17 RCW. WSR 93-22-054 (Order 93-07), § 296-155-17619, filed 10/29/93, effective 12/10/93.]

WAC 296-155-17621 Medical surveillance. (1) General.

(a) The employer shall make available initial medical surveillance to employees occupationally exposed on any day to lead at or above the action level. Initial medical surveillance consists of biological monitoring in the form of blood sampling and analysis for lead and zinc protoporphyrin levels.

(b) The employer shall institute a medical surveillance program in accordance with subsections (2) and (3) of this section for all employees who are or may be exposed by the employer at or above the action level for more than thirty days in any consecutive twelve months;

(c) The employer shall assure that all medical examinations and procedures are performed by or under the supervision of a licensed physician.

(d) The employer shall make available the required medical surveillance including multiple physician review under subsection (3)(c) without cost to employees and at a reasonable time and place.

(2) Biological monitoring.

(a) Blood lead and ZPP level sampling and analysis. The employer shall make available biological monitoring in the form of blood sampling and analysis for lead and zinc protoporphyrin levels to each employee covered by subsection (1)(a) and (b) of this section on the following schedule:

(i) For each employee covered by subsection (1)(b) of this section, at least every two months for the first six months and every six months thereafter;

(ii) For each employee covered by subsection (1)(a) or (b) of this section whose last blood sampling and analysis indicated a blood lead level at or above 40 µg/dl, at least every two months. This frequency shall continue until two consecutive blood samples and analyses indicate a blood lead level below 40 µg/dl; and

(iii) For each employee who is removed from exposure to lead due to an elevated blood lead level at least monthly during the removal period.

(b) Follow-up blood sampling tests. Whenever the results of a blood lead level test indicate that an employee's blood lead level is at or above the numerical criterion for medical removal under WAC 296-155-17623 (1)(a), the

employer shall provide a second (follow-up) blood sampling test within two weeks after the employer receives the results of the first blood sampling test.

(c) Accuracy of blood lead level sampling and analysis. Blood lead level sampling and analysis provided pursuant to this WAC 296-155-176 shall have an accuracy (to a confidence level of ninety-five percent) within plus or minus fifteen percent or 6 µg/dl, whichever is greater, and shall be conducted by a laboratory approved by OSHA.

(d) Employee notification.

(i) Within five working days after the receipt of biological monitoring results, the employer shall notify each employee in writing of their blood lead level; and

(ii) The employer shall notify each employee whose blood lead level is at or above 40 µg/dl that the standard requires temporary medical removal with Medical Removal Protection benefits when an employee's blood lead level exceeds the numerical criterion for medical removal under WAC 296-155-17623 (1)(a).

(3) Medical examinations and consultations.

(a) Frequency. The employer shall make available medical examinations and consultations to each employee covered by subsection (1)(b) of this section on the following schedule:

(i) At least annually for each employee for whom a blood sampling test conducted at any time during the preceding twelve months indicated a blood lead level at or above 40 µg/dl;

(ii) As soon as possible, upon notification by an employee either that the employee has developed signs or symptoms commonly associated with lead intoxication, that the employee desires medical advice concerning the effects of current or past exposure to lead on the employee's ability to procreate a healthy child, that the employee is pregnant, or that the employee has demonstrated difficulty in breathing during a respirator fitting test or during use; and

(iii) As medically appropriate for each employee either removed from exposure to lead due to a risk of sustaining material impairment to health, or otherwise limited pursuant to a final medical determination.

(b) Content. The content of medical examinations made available pursuant to subdivision (a)(ii) and (iii) of this subsection shall be determined by an examining physician and, if requested by an employee, shall include pregnancy testing or laboratory evaluation of male fertility. Medical examinations made available pursuant to subdivision (a)(i) of this subsection shall include the following elements:

(i) A detailed work history and a medical history, with particular attention to past lead exposure (occupational and nonoccupational), personal habits (smoking, hygiene), and past gastrointestinal, hematologic, renal, cardiovascular, reproductive and neurological problems;

(ii) A thorough physical examination, with particular attention to teeth, gums, hematologic, gastrointestinal, renal, cardiovascular, and neurological systems. Pulmonary status should be evaluated if respiratory protection will be used;

(iii) A blood pressure measurement;

(iv) A blood sample and analysis which determines:

(A) Blood lead level;

(B) Hemoglobin and hematocrit determinations, red cell indices, and examination of peripheral smear morphology;

(C) Zinc protoporphyrin;

(D) Blood urea nitrogen; and,

(E) Serum creatinine;

(v) A routine urinalysis with microscopic examination; and

(vi) Any laboratory or other test relevant to lead exposure which the examining physician deems necessary by sound medical practice.

(c) Multiple physician review mechanism.

(i) If the employer selects the initial physician who conducts any medical examination or consultation provided to an employee by WAC 296-155-176, the employee may designate a second physician:

(A) To review any findings, determinations or recommendations of the initial physician; and

(B) To conduct such examinations, consultations, and laboratory tests as the second physician deems necessary to facilitate this review.

(ii) The employer shall promptly notify an employee of the right to seek a second medical opinion after each occasion that an initial physician conducts a medical examination or consultation pursuant to WAC 296-155-176. The employer may condition its participation in, and payment for, the multiple physician review mechanism upon the employee doing the following within fifteen days after receipt of the foregoing notification, or receipt of the initial physician's written opinion, whichever is later:

(A) The employee informing the employer that they intend to seek a second medical opinion; and

(B) The employee initiating steps to make an appointment with a second physician.

(iii) If the findings, determinations or recommendations of the second physician differ from those of the initial physician, then the employer and the employee shall assure that efforts are made for the two physicians to resolve any disagreement.

(iv) If the two physicians have been unable to quickly resolve their disagreement, then the employer and the employee through their respective physicians shall designate a third physician:

(A) To review any findings, determinations or recommendations of the prior physicians; and

(B) To conduct such examinations, consultations, laboratory tests and discussions with the prior physicians as the third physician deems necessary to resolve the disagreement of the prior physicians.

(v) The employer shall act consistent with the findings, determinations and recommendations of the third physician, unless the employer and the employee reach an agreement which is otherwise consistent with the recommendations of at least one of the three physicians.

(d) Information provided to examining and consulting physicians.

(i) The employer shall provide an initial physician conducting a medical examination or consultation under WAC 296-155-176 with the following information:

(A) A copy of this regulation for lead including all Appendices;

(B) A description of the affected employee's duties as they relate to the employee's exposure;

(C) The employee's exposure level or anticipated exposure level to lead and to any other toxic substance (if applicable);

(D) A description of any personal protective equipment used or to be used;

(E) Prior blood lead determinations; and

(F) All prior written medical opinions concerning the employee in the employer's possession or control.

(ii) The employer shall provide the foregoing information to a second or third physician conducting a medical examination or consultation under WAC 296-155-176 upon request either by the second or third physician, or by the employee.

(e) Written medical opinions.

(i) The employer shall obtain and furnish the employee with a copy of a written medical opinion from each examining or consulting physician which contains only the following information:

(A) The physician's opinion as to whether the employee has any detected medical condition which would place the employee at increased risk of material impairment of the employee's health from exposure to lead;

(B) Any recommended special protective measures to be provided to the employee, or limitations to be placed upon the employee's exposure to lead;

(C) Any recommended limitation upon the employee's use of respirators, including a determination of whether the employee can wear a powered air purifying respirator if a physician determines that the employee cannot wear a negative pressure respirator; and

(D) The results of the blood lead determinations.

(ii) The employer shall instruct each examining and consulting physician to:

(A) Not reveal either in the written opinion or orally, or in any other means of communication with the employer, findings, including laboratory results, or diagnoses unrelated to an employee's occupational exposure to lead; and

(B) Advise the employee of any medical condition, occupational or nonoccupational, which dictates further medical examination or treatment.

(f) Alternate physician determination mechanisms. The employer and an employee or authorized employee representative may agree upon the use of any alternate physician determination mechanism in lieu of the multiple physician review mechanism provided by subdivision (c) of this subsection so long as the alternate mechanism is as expeditious and protective as the requirements contained in this section.

(4) Chelation.

(a) The employer shall assure that any person whom he retains, employs, supervises or controls does not engage in prophylactic chelation of any employee at any time.

(b) If therapeutic or diagnostic chelation is to be performed by any person in subdivision (a) of this subsection, the employer shall assure that it be done under the supervision of a licensed physician in a clinical setting with thorough and appropriate medical monitoring and that the employee is notified in writing prior to its occurrence.

[Statutory Authority: RCW 49.17.010, 49.17.040, 49.17.050, 49.17.060. and Chapter 49.17 RCW. WSR 12-24-071, § 296-155-17621, filed 12/4/12, effective 1/4/13. Statutory Authority: Chapter 49.17 RCW. WSR 93-22-054 (Order 93-07), § 296-155-17621, filed 10/29/93, effective 12/10/93.]

WAC 296-155-17623 Medical removal protection. (1) Temporary medical removal and return of an employee.

(a) Temporary removal due to elevated blood lead level. The employer shall remove an employee from work having an exposure to lead at or above the action level on each occasion that a periodic and a follow-up blood sampling test conducted pursuant to WAC 296-155-176 indicate that the employee's blood lead level is at or above 50 µg/dl; and

(b) Temporary removal due to a final medical determination.

(i) The employer shall remove an employee from work having an exposure to lead at or above the action level on each occasion that a final medical determination results in a medical finding, determination, or opinion that the employee has a detected medical condition which places the employee at increased risk of material impairment to health from exposure to lead.

(ii) For the purposes of WAC 296-155-176, the phrase "final medical determination" means the written medical opinion on the employees' health status by the examining physician or, where relevant, the outcome of the multiple physician review mechanism or alternate medical determination mechanism used pursuant to the medical surveillance provisions of WAC 296-155-176.

(iii) Where a final medical determination results in any recommended special protective measures for an employee, or limitations on an employee's exposure to lead, the employer shall implement and act consistent with the recommendation.

(c) Return of the employee to former job status.

(i) The employer shall return an employee to their former job status:

(A) For an employee removed due to a blood lead level at or above 50 µg/dl when two consecutive blood sampling tests indicate that the employee's blood lead level is below 40 µg/dl;

(B) For an employee removed due to a final medical determination, when a subsequent final medical determination results in a medical finding, determination, or opinion that the employee no longer has a detected medical condition which places the employee at increased risk of material impairment to health from exposure to lead.

(ii) For the purposes of WAC 296-155-176, the requirement that an employer return an employee to their former job status is not intended to expand upon or restrict any rights an employee has or would have had, absent temporary medical removal, to a specific job classification or position under the terms of a collective bargaining agreement.

(d) Removal of other employee special protective measure or limitations. The employer shall remove any limitations placed on an employee or end any special protective measures provided to an employee pursuant to a final medical determination when a subsequent final medical determination indicates that the limitations or special protective measures are no longer necessary.

(e) Employer options pending a final medical determination. Where the multiple physician review mechanism, or alternate medical determination mechanism used pursuant to the medical surveillance provisions of WAC 296-155-176, has not yet resulted in a final medical determination with respect to an employee, the employer shall act as follows:

(i) Removal. The employer may remove the employee from exposure to lead, provide special protective measures to the employee, or place limitations upon the employee, consistent with the medical findings, determinations, or recommendations of any of the physicians who have reviewed the employee's health status.

(ii) Return. The employer may return the employee to their former job status, end any special protective measures provided to the employee, and remove any limitations placed upon the employee, consistent with the medical findings, determinations, or recommendations of any of the physicians who have reviewed the employee's health status, with two exceptions.

(A) If the initial removal, special protection, or limitation of the employee resulted from a final medical determination which differed from the findings, determinations, or recommendations of the initial physician or;

(B) If the employee has been on removal status for the preceding eighteen months due to an elevated blood lead level, then the employer shall await a final medical determination.

(2) Medical removal protection benefits.

(a) Provision of medical removal protection benefits. The employer shall provide an employee up to eighteen months of medical removal protection benefits on each occasion that an employee is removed from exposure to lead or otherwise limited pursuant to WAC 296-155-176.

(b) Definition of medical removal protection benefits. For the purposes of WAC 296-155-176, the requirement that an employer provide medical removal protection benefits means that, as long as the job the employee was removed from continues, the employer shall maintain the total normal earnings, seniority and other employment rights and benefits of an employee, including the employee's right to their former job status as though the employee had not been medically removed from the employee's job or otherwise medically limited.

(c) Follow-up medical surveillance during the period of employee removal or limitation. During the period of time that an employee is medically removed from their job or otherwise medically limited, the employer may condition the provision of medical removal protection benefits upon the employee's participation in follow-up medical surveillance made available pursuant to WAC 296-155-176.

(d) Workers' compensation claims. If a removed employee files a claim for workers' compensation payments for a lead-related disability, then the employer shall continue to provide medical removal protection benefits pending disposition of the claim. To the extent that an award is made to the employee for earnings lost during the period of removal, the employer's medical removal protection obligation shall be reduced by such amount. The employer shall receive no credit for workers' compensation payments received by the employee for treatment-related expenses.

(e) Other credits. The employer's obligation to provide medical removal protection benefits to a removed employee shall be reduced to the extent that the employee receives compensation for earnings lost during the period of removal either from a publicly or employer-funded compensation program, or receives income from employment with another employer made possible by virtue of the employee's removal.

(f) Voluntary removal or restriction of an employee. Where an employer, although not required by WAC 296-155-176 to do so, removes an employee from exposure to lead or otherwise places limitations on an employee due to the effects of lead exposure on the employee's medical condition, the employer shall provide medical removal protection benefits to the employee equal to that required by subdivisions (a) and (b) of this subsection.

[Statutory Authority: RCW 49.17.010, 49.17.040, 49.17.050, 49.17.060 and chapter 49.17 RCW. WSR 12-24-071, § 296-155-17623, filed 12/4/12, effective 1/4/13. Statutory Authority: Chapter 49.17 RCW. WSR 93-22-054 (Order 93-07), § 296-155-17623, filed 10/29/93, effective 12/10/93.]

WAC 296-155-17625 Communication of hazards. (1) General.

(a) Hazard communication. The employer shall include lead in the program established to comply with the Hazard Communication Standard (HCS), WAC 296-901-140. The employer shall ensure that each employee has access to labels on containers of lead and safety data sheets, and is trained in accordance with the provisions of HCS and subsection (1) of this section. The employer shall ensure that at least the following hazards are addressed:

(i) Reproductive/developmental toxicity;

(ii) Central nervous system effects;

(iii) Kidney effects;

(iv) Blood effects; and

(v) Acute toxicity effects.

(b) The employer shall train each employee who is subject to exposure to lead at or above the action level on any day or who is subject to exposure to lead compounds which may cause skin or eye irritation (e.g., lead arsenate, lead azide), in accordance with the requirements of this chapter. The employer shall institute a training program in accordance with subsection (2) of this section and ensure employee participation.

(c) The employer shall provide the training program as initial training prior to the time of job assignment or prior to the start up date for this requirement, whichever comes last.

(d) The employer shall also provide the training program at least annually for each employee who is subject to lead exposure at or above the action level on any day.

(2) Training program. The employer shall assure that each employee is trained in the following:

(a) The content of this standard and its appendices;

(b) The specific nature of the operations which could result in exposure to lead above the action level;

(c) The training requirements for respiratory protection as required by WAC 296-842-110, 296-842-19005, and 296-842-16005;

(d) The purpose and a description of the medical surveillance program, and the medical removal protection program including information concerning the adverse health effects associated with excessive exposure to lead (with particular attention to the adverse reproductive effects on both males and females and hazards to the fetus and additional precautions for employees who are pregnant);

(e) The engineering controls and work practices associated with the employee's job assignment including training of employees to follow relevant good work practices described in Appendix B, WAC 296-155-17652;

(f) The contents of any compliance plan in effect;

(g) Instructions to employees that chelating agents should not routinely be used to remove lead from their bodies and should not be used at all except under the direction of a licensed physician; and

(h) The employee's right of access to records under Part B, chapter 296-62 WAC and chapter 296-800 WAC.

(3) Access to information and training materials.

(a) The employer shall make readily available to all affected employees a copy of this standard and its appendices.

(b) The employer shall provide, upon request, all materials relating to the employee information and training program to affected employees and their designated representatives, and the director.

[Statutory Authority: RCW 49.17.010, 49.17.040, 49.17.050, 49.17.060 and 29 C.F.R. 1910 Subpart Z. WSR 14-07-086, § 296-155-17625, filed 3/18/14, effective 5/1/14. Statutory Authority: RCW 49.17.010, 49.17.040, 49.17.050, 49.17.060. WSR 09-15-145, § 296-155-17625, filed 7/21/09, effective 9/1/09; WSR 05-20-055, § 296-155-17625, filed 10/3/05, effective 12/1/05; WSR 05-03-093, § 296-155-17625, filed 1/18/05, effective 3/1/05. Statutory Authority: RCW 49.17.010, [49.17].040, and [49.17].050. WSR 01-11-038, § 296-155-17625, filed 5/9/01, effective 9/1/01; WSR 99-10-071, § 296-155-17625, filed 5/4/99, effective 9/1/99. Statutory Authority: Chapter 49.17 RCW. WSR 93-22-054 (Order 93-07), § 296-155-17625, filed 10/29/93, effective 12/10/93.]

WAC 296-155-17627 Signs. General.

(1) The employer shall post the following warning signs in each work area where an employee's exposure to lead is above the PEL.

DANGER LEAD WORK AREA
MAY DAMAGE FERTILITY OR THE UNBORN CHILD
CAUSES DAMAGE TO THE CENTRAL NERVOUS SYSTEM
DO NOT EAT, DRINK OR SMOKE IN THIS AREA

(2) The employer shall ensure that no statement appears on or near any sign required by this section which contradicts or detracts from the meaning of the required sign.

(3) The employer shall ensure that signs required by this section are illuminated and cleaned as necessary so that the legend is readily visible.

(4) The employer may use signs required by other statutes, regulations or ordinances in addition to, or in combination with, signs required by this section.

(5) Prior to June 1, 2016, employers may use the following legend in lieu of that specified in subsection (1) of this section:

WARNING
LEAD WORK AREA
POISON
NO SMOKING OR EATING

[Statutory Authority: RCW 49.17.010, 49.17.040, 49.17.050, 49.17.060 and 29 C.F.R. 1910 Subpart Z. WSR 14-07-086, § 296-155-17627, filed 3/18/14, effective 5/1/14. Statutory Authority: Chapter 49.17 RCW. WSR 93-22-054 (Order 93-07), § 296-155-17627, filed 10/29/93, effective 12/10/93.]

WAC 296-155-17629 Recordkeeping. (1) Exposure assessment.

(a) The employer shall establish and maintain an accurate record of all monitoring and other data used in conducting employee exposure assessments as required in WAC 296-155-17609.

(b) Exposure monitoring records shall include:

(i) The date(s), number, duration, location and results of each of the samples taken if any, including a description of the sampling procedure used to determine representative employee exposure where applicable;

(ii) A description of the sampling and analytical methods used and evidence of their accuracy;

(iii) The type of respiratory protective devices worn, if any;

(iv) Name, Social Security number, and job classification of the employee monitored and of all other employees whose exposure the measurement is intended to represent; and

(v) The environmental variables that could affect the measurement of employee exposure.

(c) The employer shall maintain monitoring and other exposure assessment records in accordance with the provisions of part B, chapter 296-62 WAC.

(2) Medical surveillance.

(a) The employer shall establish and maintain an accurate record for each employee subject to medical surveillance as required by WAC 296-155-17621.

(b) This record shall include:

(i) The name, Social Security number, and description of the duties of the employee;

(ii) A copy of the physician's written opinions;

(iii) Results of any airborne exposure monitoring done on or for that employee and provided to the physician; and

(iv) Any employee medical complaints related to exposure to lead.

(c) The employer shall keep, or assure that the examining physician keeps, the following medical records:

(i) A copy of the medical examination results including medical and work history required by WAC 296-155-17621;

(ii) A description of the laboratory procedures and a copy of any standards or guidelines used to interpret the test results or references to that information;

(iii) A copy of the results of biological monitoring.

(d) The employer shall maintain or assure that the physician maintains medical records in accordance with the provisions of part B, chapter 296-62 WAC.

(3) Medical removals.

(a) The employer shall establish and maintain an accurate record for each employee removed from current exposure to lead pursuant to WAC 296-155-17623.

(b) Each record shall include:

(i) The name and Social Security number of the employee;

(ii) The date of each occasion that the employee was removed from current exposure to lead as well as the corresponding date on which the employee was returned to their former job status;

(iii) A brief explanation of how each removal was or is being accomplished; and

(iv) A statement with respect to each removal indicating whether or not the reason for the removal was an elevated blood lead level.

(c) The employer shall maintain each medical removal record for at least the duration of an employee's employment.

(4) Objective data for exemption from requirement for initial monitoring.

(a) For purposes of WAC 296-155-176, objective data are information demonstrating that a particular product or material containing lead or a specific process, operation, or activity involving lead cannot release dust or fumes in concentrations at or above the action level under any expected conditions of use. Objective data can be obtained from an industry-wide study or from laboratory product test results from manufacturers of lead containing products or materials. The data the employer uses from an industry-wide survey must be obtained under workplace conditions closely resembling the processes, types of material, control methods, work practices and environmental conditions in the employer's current operations.

(b) The employer shall maintain the record of the objective data relied upon for at least thirty years.

(5) Availability. The employer shall make available upon request all records required to be maintained by this section to affected employees, former employees, and their designated representatives, and to the director for examination and copying.

(6) Transfer of records. The employer shall comply with requirements involving the transfer of records set forth in WAC 296-800-6005 [WAC 296-802-60005].

[Statutory Authority: RCW 49.17.010, 49.17.040, 49.17.050, 49.17.060 and chapter 49.17 RCW. WSR 12-24-071, § 296-155-17629, filed 12/4/12, effective 1/4/13. Statutory Authority: Chapter 49.17 RCW. WSR 93-22-054 (Order 93-07), § 296-155-17629, filed 10/29/93, effective 12/10/93.]

WAC 296-155-17631 Observation of monitoring. (1) Employee observation. The employer shall provide affected employees or their designated representatives an opportunity to observe any monitoring of employee exposure to lead conducted pursuant to WAC 296-155-17609.

(2) Observation procedures.

(a) Whenever observation of the monitoring of employee exposure to lead requires entry into an area where the use of respirators, protective clothing or equipment is required, the employer shall provide the observer with and assure the use of such respirators, clothing and equipment, and shall require the observer to comply with all other applicable safety and health procedures.

(b) Without interfering with the monitoring, observers shall be entitled to:

(i) Receive an explanation of the measurement procedures;

(ii) Observe all steps related to the monitoring of lead performed at the place of exposure; and

(iii) Record the results obtained or receive copies of the results when returned by the laboratory.

[Statutory Authority: Chapter 49.17 RCW. WSR 93-22-054 (Order 93-07), § 296-155-17631, filed 10/29/93, effective 12/10/93.]

WAC 296-155-17650 Appendix A to WAC 296-155-176—Substance data sheet for occupational exposure to lead. The information contained in the appendices to WAC 296-155-176 is not intended by itself, to create any additional obligations not otherwise imposed by this standard nor detract from any existing obligation.

(1) Substance identification.

(a) Substance: Pure lead (Pb) is a heavy metal at room temperature and pressure and is a basic chemical element. It can combine with various other substances to form numerous lead compounds.

(b) Compounds covered by the standard: The word "lead" when used in this standard means elemental lead, all inorganic lead compounds and a class of organic lead compounds called lead soaps. This standard does not apply to other organic lead compounds.

(c) Uses: Exposure to lead occurs in several different occupations in the construction industry, including demolition or salvage of structures where lead or lead-containing materials are present; removal or encapsulation of lead-containing materials, new construction, alteration, repair, or renovation of structures that contain lead or materials containing lead; installation of products containing lead. In addition, there are construction related activities where exposure to lead may occur, including transportation, disposal, storage, or containment of lead or materials containing lead on construction sites, and maintenance operations associated with construction activities.

(d) Permissible exposure: The permissible exposure limit (PEL) set by the standard is 50 micrograms of lead per cubic meter of air (50 $\mu g/m^3$), averaged over an 8-hour workday.

(e) Action level: The standard establishes an action level of 30 micrograms of lead per cubic meter of air (30 $\mu g/m^3$), averaged over an 8-hour workday. The action level triggers several ancillary provisions of the standard such as exposure monitoring, medical surveillance, and training.

(2) Health hazard data.

(a) Ways in which lead enters your body. When absorbed into your body in certain doses, lead is a toxic substance. The object of the lead standard is to prevent absorption of harmful quantities of lead. The standard is intended to protect you not only from the immediate toxic effects of lead, but also from the serious toxic effects that may not become apparent until years of exposure have passed. Lead can be absorbed into your body by inhalation (breathing) and ingestion (eating). Lead (except for certain organic lead compounds not covered by the standard, such as tetraethyl lead) is not absorbed through your skin. When lead is scattered in the air as a dust, fume respiratory tract. Inhalation of airborne lead is generally the most important source of occupational lead absorption. You can also absorb lead through your digestive system if lead gets into your mouth and is swallowed. If you handle food, cigarettes, chewing tobacco, or make-up which have lead on them or handle them with hands contaminated with lead, this will contribute to ingestion. A significant portion of the lead that you inhale or ingest gets into your blood stream. Once in your blood stream, lead is circulated throughout your body and stored in various organs and body tissues. Some of this lead is quickly filtered out of your body and excreted, but some remains in the blood and other tissues. As exposure to lead continues, the amount stored in your body will increase if you are absorbing more lead than your body is excreting. Even though you may not be aware of any immediate symptoms of disease, this lead stored in your tissues can be slowly causing irreversible damage, first to individual cells, then to your organs and whole body systems.

(b) Effects of overexposure to lead.

(i) Short term (acute) overexposure. Lead is a potent, systemic poison that serves no known useful function once absorbed by your body. Taken in large enough doses, lead can kill you in a matter of days. A condition affecting the brain called acute encephalopathy may arise which develops quickly to seizures, coma, and death from cardiorespiratory arrest. A short term dose of lead can lead to acute encephalopathy. Short term occupational exposures of this magnitude are highly unusual, but not impossible. Similar forms of encephalopathy may, however, arise from extended, chronic exposure to lower doses of lead. There is no sharp dividing line between rapidly developing acute effects of lead, and chronic effects which take longer to acquire. Lead adversely affects numerous body systems, and causes forms of health impairment and disease which arise after periods of exposure as short as days or as long as several years.

(ii) Long-term (chronic) overexposure. Chronic overexposure to lead may result in severe damage to your blood-forming, nervous, urinary and reproductive systems. Some common symptoms of chronic overexposure include loss of appetite, metallic taste in the mouth, anxiety, constipation, nausea, pallor, excessive tiredness, weakness, insomnia, headache, nervous irritability, muscle and joint pain or soreness, fine tremors, numbness, dizziness, hyperactivity and colic. In lead colic there may be severe abdominal pain. Damage to the central nervous system in general and the brain (encephalopathy) in particular is one of the most severe forms of lead poisoning. The most severe, often fatal, form of encephalopathy may be preceded by vomiting, a feeling of dullness progressing to drowsiness and stupor, poor memory, restlessness, irritability, tremor, and convulsions. It may arise suddenly with the onset of seizures, followed by coma, and death. There is a tendency for muscular weakness to develop at the same time. This weakness may progress to paralysis often observed as a characteristic "wrist drop" or "foot drop" and is a manifestation of a disease to the nervous system called peripheral neuropathy. Chronic overexposure to lead also results in kidney disease with few, if any, symptoms appearing until extensive and most likely permanent kidney damage has occurred. Routine laboratory tests reveal the presence of this kidney disease only after about two-thirds of kidney function is lost. When overt symptoms of urinary dysfunction arise, it is often too late to correct or prevent worsening conditions, and progression to kidney dialysis or death is possible. Chronic overexposure to lead impairs the reproductive systems of both men and women. Overexposure to lead may result in decreased sex drive, impotence and sterility in men. Lead can alter the structure of sperm cells raising the risk of birth defects. There is evidence of miscarriage and stillbirth in women whose husbands were exposed to lead or who were exposed to lead themselves. Lead exposure also may result in decreased fertility, and abnormal menstrual cycles in women. The course of pregnancy may be adversely affected by exposure to lead since lead crosses the placental barrier and poses risks to developing fetuses. Children born of parents either one of whom were exposed to excess lead levels are more likely to have birth defects, mental retardation, behavioral disorders or die during the first year of childhood. Overexposure to lead also disrupts the blood-forming system resulting in decreased hemoglobin (the substance in the blood that carries oxygen to the cells) and ultimately anemia. Anemia is characterized by weakness, pallor and fatigability as a result of decreased oxygen carrying capacity in the blood.

(iii) Health protection goals of the standard. Prevention of adverse health effects for most workers from exposure to lead throughout a working lifetime requires that a worker's blood lead level (BLL, also expressed as PbB) be maintained at or below forty micrograms per deciliter of whole blood (40 µg/dl). The blood lead levels of workers (both male and female workers) who intend to have children should be maintained below 30 µg/dl to minimize adverse reproductive health effects to the parents and to the developing fetus. The measurement of your blood lead level (BLL) is the most useful indicator of the amount of lead being absorbed by your body. Blood lead levels are most often reported in units of milligrams (mg) or micrograms (µg) of lead (1 mg = 1000 µg) per 100 grams (100g), 100 milliliters (100 ml) or deciliter (dl) of blood. These three units are essentially the same. Sometime BLLs are expressed in the form of mg% or µg%. This is a shorthand notation for 100g, 100 ml, or dl. (References to BLL measurements in this standard are expressed in the form of µg/dl.)

BLL measurements show the amount of lead circulating in your blood stream, but do not give any information about the amount of lead stored in your various tissues. BLL measurements merely show current absorption of lead, not the effect that lead is having on your body or the effects that past lead exposure may have already caused. Past research into lead-related diseases, however, has focused heavily on associations between BLLs and various diseases. As a result, your BLL is an important indicator of the likelihood that you will gradually acquire a lead-related health impairment or disease.

Once your blood lead level climbs above 40 µg/dl, your risk of disease increases. There is a wide variability of individual response to lead, thus it is difficult to say that a particular BLL in a given person will cause a particular effect. Studies have associated fatal encephalopathy with BLLs as low as 150 µg/dl. Other studies have shown other forms of diseases in some workers with BLLs well below 80 µg/dl. Your BLL is a crucial indicator of the risks to your health, but one other factor is also extremely important. This factor is the length of time you have had elevated BLLs. The longer you have an elevated BLL, the greater the risk that large quantities of lead are being gradually stored in your organs and tissues (body burden). The greater your overall body burden, the greater the chances of substantial permanent damage. The best way to prevent all forms of lead-related impairments and diseases—both short term and long term—is to maintain your BLL below 40 µg/dl. The provisions of the standard are designed with this end in mind.

Your employer has prime responsibility to assure that the provisions of the standard are complied with both by the company and by individual workers. You, as a worker, however, also have a responsibility to assist your employer in complying with the standard. You can play a key role in protecting your own health by learning about the lead hazards and their control, learning what the standard requires, following the standard where it governs your own actions, and seeing that your employer complies with provisions governing employee actions.

(iv) Reporting signs and symptoms of health problems. You should immediately notify your employer if you develop signs or symptoms associated with lead poisoning or if you desire medical advice concerning the effects of current or past exposure to lead or your ability to have a healthy child. You should also notify your employer if you have difficulty breathing during a respirator fit test or while wearing a respirator. In each of these cases, your employer must make available to you appropriate medical examinations or consultations. These must be provided at no cost to you and at a reasonable time and place. The standard contains a procedure whereby you can obtain a second opinion by a physician of your choice if your employer selected the initial physician.

[Statutory Authority: Chapter 49.17 RCW. WSR 93-22-054 (Order 93-07), § 296-155-17650, filed 10/29/93, effective 12/10/93.]

WAC 296-155-17652 Appendix B to WAC 296-155-176—Employee standard summary. This appendix summarizes key provisions of the standard for lead in construction that you as a worker should become familiar with.

(1) Permissible exposure limit (PEL)—WAC 296-62-17607.

The standard sets a permissible exposure limit (PEL) of 50 micrograms of lead per cubic meter of air (50 $\mu g/m^3$), averaged over an eight-hour workday which is referred to as a time-weighted average (TWA). This is the highest level of lead in air to which you may be permissibly exposed over an eight-hour workday. However, since this is an eight-hour average, short exposures above the PEL are permitted so long as for each eight-hour work day your average exposure does not exceed this level. This standard, however, takes into account the fact that your daily exposure to lead can extend beyond a typical eight-hour workday as the result of overtime or other alterations in your work schedule. To deal with this situation, the standard contains a formula which reduces your permissible exposure when you are exposed more than eight hours. For example, if you are exposed to lead for ten hours a day, the maximum permitted average exposure would be 40 $\mu g/m^3$.

(2) Exposure assessment—WAC 296-155-17609.

If lead is present in your workplace in any quantity, your employer is required to make an initial determination of whether any employee's exposure to lead exceeds the action level (30 $\mu g/m^3$ averaged over an eight-hour day). Employee exposure is that exposure which would occur if the employee were not using a respirator. This initial determination requires your employer to monitor workers' exposures unless the employee has objective data which can demonstrate conclusively that no employee will be exposed to lead in excess of the action level. Where objective data is used in lieu of actual monitoring the employer must establish and maintain an accurate record, documenting its relevancy in assessing exposure levels for current job conditions. If such objective data is available, the employer need proceed no further on employee exposure assessment until such time that conditions have changed and the determination is no longer valid.

Objective data may be compiled from various sources, e.g., insurance companies and trade associations and information from suppliers or exposure data collected from similar operations. Objective data may also comprise previously-collected sampling data including area monitoring. If it cannot be determined through using objective data that worker exposure is less than the action level, your employer must conduct monitoring or must rely on relevant previous personal sampling, if available. Where monitoring is required for the initial determination, it may be limited to a representative number of employees who are reasonably expected to have the highest exposure levels. If your employer has conducted appropriate air sampling for lead in the past twelve months, they may use these results, provided they are applicable to the same employee tasks and exposure conditions and meet the requirements for accuracy as specified in the standard. As with objective data, if such results are relied upon for the initial determination, your employer must establish and maintain a record as to the relevancy of such data to current job conditions.

If there have been any employee complaints of symptoms which may be attributable to exposure to lead or if there is any other information or observations which would indicate employee exposure to lead, this must also be considered as part of the initial determination. If this initial determination shows that a reasonable possibility exists that any employee may be exposed, without regard to respirator, over the action level, your employer must set up an air monitoring program to determine the exposure level representative of each employee exposed to lead at your workplace. In carrying out this air monitoring program, your employer is not required to monitor the exposure of every employee, but they must monitor a representative number of employees and job types. Enough sampling must be done to enable each employee's exposure level to be reasonably represent full shift exposure. In addition, these air samples must be taken under conditions which represent each employee's regular, daily exposure to lead. Sampling performed in the past twelve months may be used to determine exposures above the action level if such sampling was conducted during work activities essentially similar to present work conditions.

The standard lists certain tasks which may likely result in exposures to lead in excess of the PEL and, in some cases, exposures in excess of fifty times the PEL. If you are performing any of these tasks, your employer must provide you with appropriate respiratory protection, protective clothing and equipment, change areas, hand washing facilities, biological monitoring, and training until such time that an exposure assessment is conducted which demonstrates that your exposure level is below the PEL.

If you are exposed to lead and air sampling is performed, your employer is required to notify you in writing within five working days of the air monitoring results which represent your exposure. If the results indicate that your exposure exceeds the PEL (without regard to your use of a respirator), then your employer must also notify you of this in writing, and provide you with a description of the corrective action that has been taken or will be taken to reduce your exposure.

Your exposure must be rechecked by monitoring, at least every six months if your exposure is at or over the action level but below the PEL. Your employer may discontinue monitoring for you if two consecutive measurements, taken at least seven days apart, are at or below the action level. Air monitoring must be repeated every three months if you are exposed over the PEL. Your employer must continue monitoring for you at this frequency until two consecutive mea-

surements, taken at least seven days apart, are below the PEL but above the action level, at which time your employer must repeat monitoring of your exposure every six months and may discontinue monitoring only after your exposure drops to or below the action level. However, whenever there is a change of equipment, process, control, or personnel or a new type of job is added at your workplace which may result in new or additional exposure to lead, your employer must perform additional monitoring.

(3) Methods of compliance—WAC 296-155-17611.

Your employer is required to assure that no employee is exposed to lead in excess of the PEL as an eight-hour TWA. The standard for lead in construction requires employers to institute engineering and work practice controls including administrative controls to the extent feasible to reduce employee exposure to lead. Where such controls are feasible but not adequate to reduce exposures below the PEL they must be used nonetheless to reduce exposures to the lowest level that can be accomplished by these means and then supplemented with appropriate respiratory protection.

Your employer is required to develop and implement a written compliance program prior to the commencement of any job where employee exposures may reach the PEL as an eight-hour TWA. The standard identifies the various elements that must be included in the plan. For example, employers are required to include a description of operations in which lead is emitted, detailing other relevant information about the operation such as the type of equipment used, the type of material involved, employee job responsibilities, operating procedures and maintenance practices. In addition, your employer's compliance plan must specify the means that will be used to achieve compliance and, where engineering controls are required, include any engineering plans or studies that have been used to select the control methods. If administrative controls involving job rotation are used to reduce employee exposure to lead, the job rotation schedule must be included in the compliance plan. The plan must also detail the type of protective clothing and equipment, including respirator, housekeeping and hygiene practices that will be used to protect you from the adverse effects of exposure to lead.

The written compliance program must be made available, upon request, to affected employees and their designated representatives, and the director.

Finally, the plan must be reviewed and updated at least every six months to assure it reflects the current status in exposure control.

(4) Respiratory protection—WAC 296-155-17613.

Your employer is required to select respirator from the types listed in Table I of the Respiratory Protection section of the standard (see WAC 296-155-17613). Any respirator chosen must be certified by the National Institute for Occupational Safety and Health (NIOSH) under the provisions of 42 C.F.R. part 84. This respirator selection table will enable your employer to choose a type of respirator that will give you a proper amount of protection based on your airborne lead exposure. Your employer may select a type of respirator that provides greater protection than that required by the standard; that is, one recommended for a higher concentration of lead than is present in your workplace. For example, a powered air-purifying respirator (PAPR) is much more protective than a typical negative pressure respirator, and may also be more comfortable to wear. A PAPR has a filter, cartridge, or canister to clean the air, and a power source which continuously blows filtered air into your breathing zone. Your employer might make a PAPR available to you to ease the burden of having to wear a respirator for long periods of time. The standard provides that you can obtain a PAPR upon request.

Your employer must also start a Respiratory Protection Program. This program must include written procedures for the proper selection, use, cleaning, storage, and maintenance of respirator.

Your employer must ensure that your respirator facepiece fits properly. Proper fit of a respirator facepiece is critical to your protection from airborne lead. Obtaining a proper fit on each employee may require your employer to make available several different types of respirator masks. To ensure that your respirator fits properly and that facepiece leakage is minimal, your employer must give you either a qualitative or quantitative fit test as specified in WAC 296-842-15005.

(5) Protective work clothing and equipment—WAC 296-155-17615.

If you are exposed to lead above the PEL as an 8-hour TWA, without regard to your use of a respirator, or if you are exposed to lead compounds such as lead arsenate or lead azide which can cause skin and eye irritation, your employer must provide you with protective work clothing and equipment appropriate for the hazard. If work clothing is provided, it must be provided in a clean and dry condition at least weekly, and daily if your airborne exposure to lead is greater than 200 $\mu g/m^3$. Appropriate protective work clothing and equipment can include coveralls or similar full-body work clothing, gloves, hats, shoes or disposable shoe coverlets, and face shields or vented goggles. Your employer is required to provide all such equipment at no cost to you. In addition, your employer is responsible for providing repairs and replacement as necessary, and also is responsible for the cleaning, laundering or disposal of protective clothing and equipment.

The standard requires that your employer assure that you follow good work practices when you are working in areas where your exposure to lead may exceed the PEL. With respect to protective clothing and equipment, where appropriate, the following procedures should be observed prior to beginning work:

- Change into work clothing and shoe covers in the clean section of the designated changing areas;
- Use work garments of appropriate protective gear, including respirator before entering the work area; and
- Store any clothing not worn under protective clothing in the designated changing area.

Workers should follow these procedures upon leaving the work area:

- HEPA vacuum heavily contaminated protective work clothing while it is still being worn. At no time may lead be removed from protective clothing by any means which result in uncontrolled dispersal of lead into the air;
- Remove shoe covers and leave them in the work area;
- Remove protective clothing and gear in the dirty area of the designated changing area. Remove protective coveralls by carefully rolling down the garment to reduce exposure to dust.
- Remove respirator last; and
- Wash hands and face.

Workers should follow these procedures upon finishing work for the day (in addition to procedures described above):

- Where applicable, place disposal coveralls and shoe covers with the abatement waste;
- Contaminated clothing which is to be cleaned, laundered or disposed of must be placed in closed containers in the change room.
- Clean protective gear, including respirator, according to standard procedures;
- Wash hands and face again.

If showers are available, take a shower and wash hair. If shower facilities are not available at the work site, shower immediately at home and wash hair.

(6) Housekeeping—WAC 296-155-17617.

Your employer must establish a housekeeping program sufficient to maintain all surfaces as free as practicable of accumulations of lead dust. Vacuuming is the preferred method of meeting this requirement, and the use of compressed air to clean floors and other surfaces is generally prohibited unless removal with compressed air is done in conjunction with ventilation systems designed to contain dispersal of the lead dust. Dry or wet sweeping, shoveling, or brushing may not be used except where vacuuming or other equally effective methods have been tried and do not work. Vacuums must be used equipped with a special filter called a high-efficiency particulate air (HEPA) filter and emptied in a manner which minimizes the reentry of lead into the workplace.

(7) Hygiene facilities and practices—WAC 296-155-17619.

The standard requires that hand washing facilities be provided where occupational exposure to lead occurs. In addition, change areas, showers (where feasible), and lunchrooms or eating areas are to be made available to workers exposed to lead above the PEL. Your employer must assure that except in these facilities, food and beverage is not present or consumed, tobacco products are not present or used, and cosmetics are not applied, where airborne exposures are above the PEL. Change rooms provided by your employer must be equipped with separate storage facilities for your protective clothing and equipment and street clothes to avoid cross-contamination. After showering, no required protective clothing or equipment worn during the shift may be worn home. It is important that contaminated clothing or equipment be removed in change areas and not be worn home or you will extend your exposure and expose your family since lead from your clothing can accumulate in your house, car, etc.

Lunchrooms or eating areas may not be entered with protective clothing or equipment unless surface dust has been removed by vacuuming, downdraft booth, or other cleaning method. Finally, workers exposed above the PEL must wash both their hands and faces prior to eating, drinking, smoking or applying cosmetics.

All of the facilities and hygiene practices just discussed are essential to minimize additional sources of lead absorption from inhalation or ingestion of lead that may accumulate on you, your clothes, or your possessions. Strict compliance with these provisions can virtually eliminate several sources of lead exposure which significantly contribute to excessive lead absorption.

(8) Medical surveillance—WAC 296-155-17621.

The medical surveillance program is part of the standard's comprehensive approach to the prevention of lead-related disease. Its purpose is to supplement the main thrust of the standard which is aimed at minimizing airborne concentrations of lead and sources of ingestion. Only medical surveillance can determine if the other provisions of the standard have affectively protected you as an individual. Compliance with the standard's provision will protect most workers from the adverse effects of lead exposure, but may not be satisfactory to protect individual workers:

- Who have high body burdens of lead acquired over past years,
- Who have additional uncontrolled sources of nonoccupational lead exposure,
- Who exhibit unusual variations in lead absorption rates, or
- Who have specific nonwork related medical conditions which could be aggravated by lead exposure (e.g., renal disease, anemia).

In addition, control systems may fail, or hygiene and respirator programs may be inadequate. Periodic medical surveillance of individual workers will help detect those failures. Medical surveillance will also be important to protect your reproductive ability—regardless of whether you are a man or woman.

All medical surveillance required by the standard must be performed by or under the supervision of a licensed physician. The employer must provide required medical surveillance without cost to employees and at a reasonable time and place. The standard's medical surveillance program has two parts—periodic biological monitoring and medical examinations. Your employer's obligation to offer you medical surveillance is triggered by the results of the air monitoring program. Full medical surveillance must be made available to all employees who are or may be exposed to lead in excess of the action level for more than thirty days a year and whose blood lead level exceeds 40 µg/dl. Initial medical surveillance consisting of blood sampling and analysis for lead and zinc protoporphyrin must be provided to all employees exposed at any time (1 day) above the action level.

Biological monitoring under the standard must be provided at least every two months for the first six months and every six months thereafter until your blood lead level is below 40 µg/dl. A zinc protoporphyrin (ZPP) test is a very useful blood test which measures an adverse metabolic effect of lead on your body and is therefore an indicator of lead toxicity.

If your BLL exceeds 40 µg/dl the monitoring frequency must be increased from every six months to at least every two months and not reduced until two consecutive BLLs indicate a blood lead level below 40 µg/dl. Each time your BLL is determined to be over 40 µg/dl, your employer must notify you of this in writing within five working days of their receipt of the test results. The employer must also inform you that the standard requires temporary medical removal with economic protection when your BLL exceeds 50 µg/dl. (See Discussion of medical removal protection—WAC 296-155-17623.) Anytime your BLL exceeds 50 µg/dl your employer must make available to you within two weeks of receipt of these test results a second follow-up BLL test to confirm your BLL. If the two tests both exceed 50 µg/dl, and you are temporarily removed, then your employer must make successive BLL tests available to you on a monthly basis during the period of your removal.

Medical examinations beyond the initial one must be made available on an annual basis if your blood lead level exceeds 40 µg/dl at any time during the preceding year and you are being exposed above the airborne action level of 30 $\mu g/m^3$ for thirty or more days per year. The initial examination will provide information to establish a baseline to which subsequent data can be compared.

An initial medical examination to consist of blood sampling and analysis for lead and zinc protoporphyrin must also be made available (prior to assignment) for each employee being assigned for the first time to an area where the airborne concentration of lead equals or exceeds the action level at any time. In addition, a medical examination or consultation must be made available as soon as possible if you notify your employer that you are experiencing signs or symptoms commonly associated with lead poisoning or that you have difficulty breathing while wearing a respirator or during a respirator fit test. You must also be provided a medical examination or consultation if you notify your employer that you desire medical advice concerning the effects of current or past exposure to lead on your ability to procreate a healthy child.

Finally, appropriate follow-up medical examinations or consultations may also be provided for employees who have been temporarily removed from exposure under the medical removal protection provisions of the standard. (See subsection (9), below.)

The standard specifies the minimum content of preassignment and annual medical examinations. The content of other types of medical examinations and consultations is left up to the sound discretion of the examining physician. Preassignment and annual medical examinations must include:

- A detailed work history and medical history;
- A thorough physical examination, including an evaluation of your pulmonary status if you will be required to use a respirator;
- A blood pressure measurement; and
- A series of laboratory tests designed to check your blood chemistry and your kidney function.

In addition, at any time upon your request, a laboratory evaluation of male fertility will be made (microscopic examination of a sperm sample), or a pregnancy test will be given.

The standard does not require that you participate in any of the medical procedures, tests, etc. which your employer is required to make available to you. Medical surveillance can, however, play a very important role in protecting your health. You are strongly encouraged, therefore, to participate in a meaningful fashion. The standard contains a multiple physician review mechanism which will give you a chance to have a physician of your choice directly participate in the medical surveillance program. If you are dissatisfied with an examination by a physician chosen by your employer, you can select a second physician to conduct an independent analysis. The two doctors would attempt to resolve any differences of opinion, and select a third physician to resolve any firm dispute. Generally your employer will choose the physician who conducts medical surveillance under the lead standard-unless you and your employer can agree on the choice of a physician or physicians. Some companies and unions have agreed in advance, for example, to use certain independent medical laboratories or panels of physicians. Any of these arrangements are acceptable so long as required medical surveillance is made available to workers.

The standard requires your employer to provide certain information to a physician to aid in their examination of you. This information includes:

- The standard and its appendices,
- A description of your duties as they relate to occupational lead exposure,
- Your exposure level or anticipated exposure level,
- A description of any personal protective equipment you wear,
- Prior blood lead level results, and
- Prior written medical opinions concerning you that the employer has.

After a medical examination or consultation the physician must prepare a written report which must contain:

- The physician's opinion as to whether you have any medical condition which places you at increased risk of material impairment to health from exposure to lead,
- Any recommended special protective measures to be provided to you,
- Any blood lead level determinations, and
- Any recommended limitation on your use of respirator.

This last element must include a determination of whether you can wear a powered air purifying respirator (PAPR) if you are found unable to wear a negative pressure respirator.

The medical surveillance program of the lead standard may at some point in time serve to notify certain workers that they have acquired a disease or other adverse medical condi-

tion as a result of occupational lead exposure. If this is true, these workers might have legal rights to compensation from public agencies, their employers, firms that supply hazardous products to their employers, or other persons. Some states have laws, including worker compensation laws, that disallow a worker who learns of a job-related health impairment to sue, unless the worker sues within a short period of time after learning of the impairment. (This period of time may be a matter of months or years.) An attorney can be consulted about these possibilities. It should be stressed that WISHA is in no way trying to either encourage or discourage claims or lawsuits. However, since results of the standard's medical surveillance program can significantly affect the legal remedies of a worker who has acquired a job-related disease or impairment, it is proper for WISHA to make you aware of this.

The medical surveillance section of the standard also contains provisions dealing with chelation. Chelation is the use of certain drugs (administered in pill form or injected into the body) to reduce the amount of lead absorbed in body tissues. Experience accumulated by the medical and scientific communities has largely confirmed the effectiveness of this type of therapy for the treatment of very severe lead poisoning. On the other hand, it has also been established that there can be a long list of extremely harmful side effects associated with the use of chelating agents. The medical community has balanced the advantages and disadvantages resulting from the use of chelating agents in various circumstances and has established when the use of these agents is acceptable. The standard includes these accepted limitations due to a history of abuse of chelation therapy by some lead companies. The most widely used chelating agents are calcium disodium EDTA, (Ca Na2 EDTA), Calcium Disodium Versenate (Versenate), and d-penicillamine (penicillamine or Cupramine).

The standard prohibits "prophylactic chelation" of any employee by any person the employer retains, supervises or controls. "Prophylactic chelation" is the routine use of chelating or similarly acting drugs to prevent elevated blood levels in workers who are occupationally exposed to lead, or the use of these drugs to routinely lower blood lead levels to predesignated concentrations believed to be "safe." It should be emphasized that where an employer takes a worker who has no symptoms of lead poisoning and has chelation carried out by a physician (either inside or outside of a hospital) solely to reduce the worker's blood lead level, that will generally be considered prophylactic chelation. The use of a hospital and a physician does not mean that prophylactic chelation is not being performed. Routine chelation to prevent increased or reduce current blood lead levels is unacceptable whatever the setting.

The standard allows the use of "therapeutic" or "diagnostic" chelation if administered under the supervision of a licensed physician in a clinical setting with thorough and appropriate medical monitoring. Therapeutic chelation responds to severe lead poisoning where there are marked symptoms. Diagnostic chelation involved giving a patient a dose of the drug then collecting all urine excreted for some period of time as an aid to the diagnosis of lead poisoning.

In cases where the examining physician determines that chelation is appropriate, you must be notified in writing of this fact before such treatment. This will inform you of a potentially harmful treatment, and allow you to obtain a second opinion.

(9) Medical removal protection—WAC 296-155-17623.

Excessive lead absorption subjects you to increased risk of disease. Medical removal protection (MRP) is a means of protecting you when, for whatever reasons, other methods, such as engineering controls, work practices, and respirator, have failed to provide the protection you need. MRP involves the temporary removal of a worker from their regular job to a place of significantly lower exposure without any loss of earnings, seniority, or other employment rights or benefits. The purpose of this program is to cease further lead absorption and allow your body to naturally excrete lead which has previously been absorbed. Temporary medical removal can result from an elevated blood lead level, or a medical opinion. For up to eighteen months, or for as long as the job the employee was removed from lasts, protection is provided as a result of either form of removal. The vast majority of removed workers, however, will return to their former jobs long before this eighteen month period expires.

You may also be removed from exposure even if your blood lead level is below 50 μ/dl if a final medical determination indicates that you temporarily need reduced lead exposure for medical reasons. If the physician who is implementing your employers medical program makes a final written opinion recommending your removal or other special protective measures, your employer must implement the physician's recommendation. If you are removed in this manner, you may only be returned when the doctor indicates that it is safe for you to do so.

The standard does not give specific instructions dealing with what an employer must do with a removed worker. Your job assignment upon removal is a matter for you, your employer and your union (if any) to work out consistent with existing procedures for job assignments. Each removal must be accomplished in a manner consistent with existing collective bargaining relationships. Your employer is given broad discretion to implement temporary removals so long as no attempt is made to override existing agreements. Similarly, a removed worker is provided no right to veto an employer's choice which satisfies the standard.

In most cases, employers will likely transfer removed employees to other jobs with sufficiently low lead exposure. Alternatively, a worker's hours may be reduced so that the time weighted average exposure is reduced, or they may be temporarily laid off if no other alternative is feasible.

In all of these situation, MRP benefits must be provided during the period of removal—i.e., you continue to receive the same earnings, seniority, and other rights and benefits you would have had if you had not been removed. Earnings includes more than just your base wage; it includes overtime, shift differentials, incentives, and other compensation you would have earned if you had not been removed. During the period of removal you must also be provided with appropriate follow-up medical surveillance. If you were removed because your blood lead level was too high, you must be provided with a monthly blood test. If a medical opinion caused your removal, you must be provided medical tests or examinations that the doctor believes to be appropriate. If you do

not participate in this follow up medical surveillance, you may lose your eligibility for MRP benefits.

When you are medically eligible to return to your former job, your employer must return you to your "former job status." This means that you are entitled to the position, wages, benefits, etc., you would have had if you had not been removed. If you would still be in your old job if no removal had occurred that is where you go back. If not, you are returned consistent with whatever job assignment discretion your employer would have had if no removal had occurred. MRP only seeks to maintain your rights, not expand them or diminish them.

If you are removed under MRP and you are also eligible for worker compensation or other compensation for lost wages, your employer's MRP benefits obligation is reduced by the amount that you actually receive from these other sources. This is also true if you obtain other employment during the time you are laid off with MRP benefits.

The standard also covers situations where an employer voluntarily removes a worker from exposure to lead due to the effects of lead on the employee's medical condition, even though the standard does not require removal. In these situations MRP benefits must still be provided as though the standard required removal. Finally, it is important to note that in all cases where removal is required, respirator cannot be used as a substitute. Respirator may be used before removal becomes necessary, but not as an alternative to a transfer to a low exposure job, or to a lay-off with MRP benefits.

(10) Employee information and training—WAC 296-155-17625.

Your employer is required to provide an information and training program for all employees exposed to lead above the action level or who may suffer skin or eye irritation from lead compounds such as lead arsenate or lead azide. The program must train these employees regarding the specific hazards associated with their work environment, protective measures which can be taken, including the contents of any compliance plan in effect, the danger of lead to their bodies (including their reproductive systems), and their rights under the standard. All employees must be trained prior to initial assignment to areas where there is a possibility of exposure over the action level.

This training program must also be provided at least annually thereafter unless further exposure above the action level will not occur.

(11) Signs—WAC 296-155-17627.

The standard requires that the following warning sign be posted in work areas where the exposure to lead exceeds the PEL:

DANGER LEAD WORK AREA
MAY DAMAGE FERTILITY OR THE UNBORN CHILD
CAUSES DAMAGE TO THE CENTRAL NERVOUS SYSTEM
DO NOT EAT, DRINK OR SMOKE IN THIS AREA

Prior to June 1, 2016, employers may use the following legend in lieu of that specified above:

WARNING
LEAD WORK AREA
POISON
NO SMOKING OR EATING

(12) Recordkeeping—WAC 296-155-17629.

Your employer is required to keep all records of exposure monitoring for airborne lead. These records must include the name and job classification of employees measured, details of the sampling and analytical techniques, the results of this sampling, and the type of respiratory protection being worn by the person sampled. Such records are to be retained for at least thirty years. Your employer is also required to keep all records of biological monitoring and medical examination results. These records must include the names of the employees, the physician's written opinion, and a copy of the results of the examination. Medical records must be preserved and maintained for the duration of employment plus thirty years. However, if the employee's duration of employment is less than one year, the employer need not retain that employee's medical records beyond the period of employment if they are provided to the employee upon termination of employment.

Recordkeeping is also required if you are temporarily removed from your job under the medical removal protection program. This record must include your name and Social Security number, the date of your removal and return, how the removal was or is being accomplished, and whether or not the reason for the removal was an elevated blood lead level. Your employer is required to keep each medical removal record only for as long as the duration of an employee's employment.

The standard requires that if you request to see or copy environmental monitoring, blood lead level monitoring, or medical removal records, they must be made available to you or to a representative that you authorize. Your union also has access to these records. Medical records other than BLL's must also be provided upon request to you, to your physician or to any other person whom you may specifically designate. Your union does not have access to your personal medical records unless you authorize their access.

(13) Observation of monitoring—WAC 296-155-17631.

When air monitoring for lead is performed at your workplace as required by this standard, your employer must allow you or someone you designate to act as an observer of the monitoring. Observers are entitled to an explanation of the measurement procedure, and to record the results obtained. Since results will not normally be available at the time of the monitoring, observers are entitled to record or receive the results of the monitoring when returned by the laboratory. Your employer is required to provide the observer with any personal protective devices required to be worn by employees working in the area that is being monitored. The employer must require the observer to wear all such equipment and to comply with all other applicable safety and health procedures.

(14) Startup date—WAC 296-155-17635.

Employer obligations under the standard begin as of that date with full implementation of engineering controls as soon as possible but no later than within four months, and all other provisions completed as soon as possible, but no later than within two months from the effective date.

(15) For additional information.

(a) A copy of the standard for lead in construction can be obtained free of charge by calling or writing to the department of labor and industries, Post Office Box 44620, Mail-

stop 44620, Olympia, Washington 98504-4620: Telephone (360) 956-5527.

(b) Additional information about the standard, its enforcement, and your employer's compliance can be obtained from the nearest office listed in your telephone directory under the state of Washington, department of labor and industries.

[Statutory Authority: RCW 49.17.010, 49.17.040, 49.17.050, 49.17.060 and 29 C.F.R. 1910 Subpart Z. WSR 14-07-086, § 296-155-17652, filed 3/18/14, effective 5/1/14. Statutory Authority: RCW 49.17.010, 49.17.040, 49.17.-050, 49.17.060. WSR 05-03-093, § 296-155-17652, filed 1/18/05, effective 3/1/05. Statutory Authority: RCW 49.17.010, [49.17].040 and [49.17].050. WSR 99-10-071, § 296-155-17652, filed 5/4/99, effective 9/1/99. Statutory Authority: Chapter 49.17 RCW. WSR 93-22-054 (Order 93-07), § 296-155-17652, filed 10/29/93, effective 12/10/93.]

WAC 296-155-17654 Appendix C to WAC 296-155-176—Medical surveillance guidelines. (1) Introduction.

The primary purpose of the Washington Industrial Safety and Health Act of 1973 is to assure, so far as possible, safe and healthful working conditions for every working man and woman. The occupational health standard for lead in construction is designed to protect workers exposed to inorganic lead including metallic lead, all inorganic lead compounds and organic lead soaps.

Under this standard occupational exposure to inorganic lead is to be limited to 50 µg/m^3 (micrograms per cubic meter) based on an eight-hour time-weighted average (TWA). This permissible exposure limit (PEL) must be achieved through a combination of engineering, work practice and administrative controls to the extent feasible. Where these controls are in place but are found not to reduce employee exposures to or below the PEL, they must be used nonetheless, and supplemented with respirators to meet the 50 µg/m^3 exposure limit.

The standard also provides for a program of biological monitoring for employees exposed to lead above the action level at any time, and additional medical surveillance for all employees exposed to levels of inorganic lead above 30 µg/m^3 (TWA) for more than thirty days per year and whose BLL exceeds 40 µg/dl.

The purpose of this document is to outline the medical surveillance provisions of the standard for inorganic lead in construction, and to provide further information to the physician regarding the examination and evaluation of workers exposed to inorganic lead.

Subsection (2) provides a detailed description of the monitoring procedure including the required frequency of blood testing for exposed workers, provisions for medical removal protection (MRP), the recommended right of the employee to a second medical opinion, and notification and recordkeeping requirements of the employer. A discussion of the requirements for respirator use and respirator monitoring and WISHA's position on prophylactic chelation therapy are also included in this subsection.

Subsection (3) discusses the toxic effects and clinical manifestations of lead poisoning and effects of lead intoxication on enzymatic pathways in heme synthesis. The adverse effects on both male and female reproductive capacity and on the fetus are also discussed.

Subsection (4) outlines the recommended medical evaluation of the worker exposed to inorganic lead, including details of the medical history, physical examination, and recommended laboratory tests, which are based on the toxic effects of lead as discussed in subsection (3).

Subsection (5) provides detailed information concerning the laboratory tests available for the monitoring of exposed workers. Included also is a discussion of the relative value of each test and the limitations and precautions which are necessary in the interpretation of the laboratory results.

(2) Medical surveillance and monitoring requirements for workers exposed to inorganic lead.

Under the standard for inorganic lead in the construction industry, initial medical surveillance consisting of biological monitoring to include blood lead and ZPP level determination shall be provided to employees exposed to lead at or above the action level on any one day. In addition, a program of biological monitoring is to be made available to all employees exposed above the action level at any time and additional medical surveillance is to be made available to all employees exposed to lead above 30 µg/m^3 TWA for more than thirty days each year and whose BLL exceeds 40 µg/dl. This program consists of periodic blood sampling and medical evaluation to be performed on a schedule which is defined by previous laboratory results, worker complaints or concerns, and the clinical assessment of the examining physician.

Under this program, the blood lead level (BLL) of all employees who are exposed to lead above 30 µg/m^3 for more than thirty days per year or whose blood lead is above 40 µg/dl but exposed for no more than thirty days per year is to be determined at least every two months for the first six months of exposure and every six months thereafter. The frequency is increased to every two months for employees whose last blood lead level was 40 µg/dl or above. For employees who are removed from exposure to lead due to an elevated blood lead, a new blood lead level must be measured monthly. A zinc protoporphyrin (ZPP) measurement is strongly recommended on each occasion that a blood lead level measurement is made.

An annual medical examination and consultation performed under the guidelines discussed in subsection (4) is to be made available to each employee exposed above 30 µg/m^3 for more than thirty days per year for whom a blood test conducted at any time during the preceding twelve months indicated a blood lead level at or above 40 µg/dl. Also, an examination is to be given to all employees prior to their assignment to an area in which airborne lead concentrations reach or exceed the 30 µg/m^3 for more than thirty days per year. In addition, a medical examination must be provided as soon as possible after notification by an employee that the employee has developed signs or symptoms commonly associated with lead intoxication, that the employee desires medical advice regarding lead exposure and the ability to procreate a healthy child, or that the employee has demonstrated difficulty in breathing during a respirator fitting test or during respirator use. An examination is also to be made available to each employee removed from exposure to lead due to a risk of sustaining material impairment to health, or otherwise limited or specially protected pursuant to medical recommendations.

Results of biological monitoring or the recommendations of an examining physician may necessitate removal of an employee from further lead exposure pursuant to the stan-

dard's medical removal protection (MRP) program. The object of the MRP program is to provide temporary medical removal to workers either with substantially elevated blood lead levels or otherwise at risk of sustaining material health impairment from continued substantial exposure to lead.

Under the standard's ultimate worker removal criteria, a worker is to be removed from any work having an eight hour TWA exposure to lead of 30 µg/m^3 when their blood lead level reaches 50 µg/dl and is confirmed by a second follow-up blood lead level performed within two weeks after the employer receives the results of the first blood sampling test. Return of the employee to their job status depends on a worker's blood lead level declining to 40 µg/dl.

As part of the standard, the employer is required to notify in writing each employee whose blood lead level exceeds 40 µg/dl. In addition each such employee is to be informed that the standard requires medical removal with MRP benefits, discussed below, when an employee's blood lead level exceeds the above defined limit.

In addition to the above blood lead level criterion, temporary worker removal may also take place as a result of medical determinations and recommendations. Written medical opinions must be prepared after each examination pursuant to the standard. If the examining physician includes a medical finding, determination or opinion that the employee has a medical condition which places the employee at increased risk of material health impairment from exposure to lead, then the employee must be removed from exposure to lead at or above 30 µg/m^3. Alternatively, if the examining physician recommends special protective measures for an employee (e.g., use of a powered air purifying respirator) or recommends limitations on an employee's exposure to lead, then the employer must implement these recommendations.

Recommendations may be more stringent than the specific provisions of the standard. The examining physician, therefore, is given broad flexibility to tailor special protective procedures to the needs of individual employees. This flexibility extends to the evaluation and management of pregnant workers and male and female workers who are planning to raise children. Based on the history, physical examination, and laboratory studies, the physician might recommend special protective measures or medical removal for an employee who is pregnant or who is planning to conceive a child when, in the physician's judgment, continued exposure to lead at the current job would pose a significant risk. The return of the employee to their former job status, or the removal of special protections or limitations, depends upon the examining physician determining that the employee is no longer at increased risk of material impairment or that special measures are no longer needed.

During the period of any form of special protection or removal, the employer must maintain the worker's earnings, seniority, and other employment rights and benefits (as though the worker had not been removed) for a period of up to eighteen months or for as long as the job the employee was removed from lasts if less than eighteen months. This economic protection will maximize meaningful worker participation in the medical surveillance program, and is appropriate as part of the employer's overall obligation to provide a safe and healthful workplace. The provisions of MRP benefits during the employee's removal period may, however, be conditioned upon participation in medical surveillance.

The lead standard provides for a multiple physician review in cases where the employee wishes a second opinion concerning potential lead poisoning or toxicity. If an employee wishes a second opinion, they can make an appointment with a physician of their choice. This second physician will review the findings, recommendations or determinations of the first physician and conduct any examinations, consultations or tests deemed necessary in an attempt to make a final medical determination. If the first and second physicians do not agree in their assessment they must try to resolve their differences. If they cannot reach an agreement then they must designate a third physician to resolve the dispute.

The employer must provide examining and consulting physicians with the following specific information: A copy of the lead regulations and all appendices, a description of the employee's duties as related to exposure, the exposure level or anticipated level to lead and any other toxic substances (if applicable), a description of personal protective equipment used, blood lead levels, and all prior written medical opinions regarding the employee in the employer's possession or control. The employer must also obtain from the physician and provide the employee with a written medical opinion containing blood lead levels, the physician's opinion as to whether the employee is at risk of material impairment to health, any recommended protective measures for the employee if further exposure is permitted, as well as any recommended limitations upon an employee's use of respirators.

Employers must instruct each physician not to reveal to the employer in writing or in any other way their findings, laboratory results, or diagnoses which are felt to be unrelated to occupational lead exposure. They must also instruct each physician to advise the employee of any occupationally or non-occupationally related medical condition requiring further treatment or evaluation.

The standard provides for the use of respirators where engineering and other primary controls are not effective. However, the use of respirator protection shall not be used in lieu of temporary medical removal due to elevated blood lead levels or findings that an employee is at risk of material health impairment. This is based on the numerous inadequacies of respirators including skin rash where the facepiece makes contact with the skin, unacceptable stress to breathing in some workers with underlying cardiopulmonary impairment, difficulty in providing adequate fit, the tendency for respirators to create additional hazards by interfering with vision, hearing, and mobility, and the difficulties of assuring the maximum effectiveness of a complicated work practice program involving respirators. Respirators do, however, serve a useful function where engineering and work practice controls are inadequate by providing supplementary, interim, or short-term protection, provided they are properly selected for the environment in which the employee will be working, properly fitted to the employee, maintained and cleaned periodically, and worn by the employee when required.

In its standard on occupational exposure to inorganic lead in the construction industry, WISHA has prohibited prophylactic chelation. Diagnostic and therapeutic chelation are permitted only under the supervision of a licensed physician

with appropriate medical monitoring in an acceptable clinical setting. The decision to initiate chelation therapy must be made on an individual basis and take into account the severity of symptoms felt to be a result of lead toxicity along with blood lead levels, ZPP levels, and other laboratory tests as appropriate. EDTA and penicillamine which are the primary chelating agents used in the therapy of occupational lead poisoning have significant potential side effects and their use must be justified on the basis of expected benefits to the worker. Unless frank and severe symptoms are present, therapeutic chelation is not recommended, given the opportunity to remove a worker from exposure and allow the body to naturally excrete accumulated lead. As a diagnostic aid, the chelation mobilization test using CA-EDTA has limited applicability. According to some investigators, the test can differentiate between lead-induced and other nephropathies. The test may also provide an estimation of the mobile fraction of the total body lead burden.

Employers are required to assure that accurate records are maintained on exposure assessment, including environmental monitoring, medical surveillance, and medical removal for each employee. Exposure assessment records must be kept for at least thirty years. Medical surveillance records must be kept for the duration of employment plus thirty years except in cases where the employment was less than one year. If duration of employment is less than one year, the employer need not retain this record beyond the term of employment if the record is provided to the employee upon termination of employment. Medical removal records also must be maintained for the duration of employment. All records required under the standard must be made available upon request to the director. Employers must also make environmental and biological monitoring and medical removal records available to affected employees and to former employees or their authorized employee representatives. Employees or their specifically designated representatives have access to their entire medical surveillance records.

In addition, the standard requires that the employer inform all workers exposed to lead at or above 30 $\mu g/m^3$ of the provisions of the standard and all its appendices, the purpose and description of medical surveillance and provisions for medical removal protection if temporary removal is required. An understanding of the potential health effects of lead exposure by all exposed employees along with full understanding of their rights under the lead standard is essential for an effective monitoring program.

(3) Adverse health effects of inorganic lead.

Although the toxicity of lead has been known for 2,000 years, the knowledge of the complex relationship between lead exposure and human response is still being refined. Significant research into the toxic properties of lead continues throughout the world, and it should be anticipated that our understanding of thresholds of effects and margins of safety will be improved in future years. The provisions of the lead standard are founded on two prime medical judgments: First, the prevention of adverse health effects from exposure to lead throughout a working lifetime requires that worker blood lead levels be maintained at or below 40 µg/dl and second, the blood lead levels of workers, male or female, who intend to parent in the near future should be maintained below 30 µg/dl to minimize adverse reproductive health effects to the parents and developing fetus. The adverse effects of lead on reproduction are being actively researched and WISHA encourages the physician to remain abreast of recent developments in the area to best advise pregnant workers or workers planning to conceive children.

The spectrum of health effects caused by lead exposure can be subdivided into five developmental stages: Normal, physiological changes of uncertain significance, pathophysiological changes, overt symptoms (morbidity), and mortality. Within this process there are no sharp distinctions, but rather a continuum of effects. Boundaries between categories overlap due to the wide variation of individual responses and exposures in the working population. WISHA's development of the lead standard focused on pathophysiological changes as well as later stages of disease.

(a) Heme synthesis inhibition. The earliest demonstrated effect of lead involves its ability to inhibit at least two enzymes of the heme synthesis pathway at very low blood levels. Inhibition of delta aminolevulinic acid dehydrase (ALA-D) which catalyzes the conversion of delta-aminolevulinic acid (ALA) to protoporphyrin is observed at a blood lead level below 20 µg/dl. At a blood lead level of 40 µg/dl, more than 20% of the population would have 70% inhibition of ALA-D. There is an exponential increase in ALA excretion at blood lead levels greater than 40 µg/dl.

Another enzyme, ferrochelatase, is also inhibited at low blood lead levels. Inhibition of ferrochelatase leads to increased free erythrocyte protoporphyrin (FEP) in the blood which can then bind to zinc to yield zinc protoporphyrin. At a blood lead level of 50 µg/dl or greater, nearly 100% of the population will have an increase in FEP. There is also an exponential relationship between blood lead levels greater than 40 µg/dl and the associated ZPP level, which has led to the development of the ZPP screening test for lead exposure.

While the significance of these effects is subject to debate, it is WISHA's position that these enzyme disturbances are early stages of a disease process which may eventually result in the clinical symptoms of lead poisoning. Whether or not the effects do progress to the later stages of clinical disease, disruption of these enzyme processes over a working lifetime is considered to be a material impairment of health.

One of the eventual results of lead-induced inhibition of enzymes in the heme synthesis pathway is anemia which can be asymptomatic if mild but associated with a wide array of symptoms including dizziness, fatigue, and tachycardia when more severe. Studies have indicated that lead levels as low as 50 µg/dl can be associated with a definite decreased hemoglobin, although most cases of lead-induced anemia, as well as shortened red-cell survival times, occur at lead levels exceeding 80 µg/dl. Inhibited hemoglobin synthesis is more common in chronic cases whereas shortened erythrocyte life span is more common in acute cases.

In lead-induced anemias, there is usually a reticulocytosis along with the presence of basophilic stippling, and ringed sideroblasts, although none of the above are pathognomonic for lead-induced anemia.

(b) Neurological effects. Inorganic lead has been found to have toxic effects on both the central and peripheral nervous systems. The earliest stages of lead-induced central nervous system effects first manifest themselves in the form of

behavioral disturbances and central nervous system symptoms including irritability, restlessness, insomnia and other sleep disturbances, fatigue, vertigo, headache, poor memory, tremor, depression, and apathy. With more severe exposure, symptoms can progress to drowsiness, stupor, hallucinations, delirium, convulsions and coma.

The most severe and acute form of lead poisoning which usually follows ingestion or inhalation of large amounts of lead is acute encephalopathy which may arise precipitously with the onset of intractable seizures, coma, cardiorespiratory arrest, and death within forty-eight hours.

While there is disagreement about what exposure levels are needed to produce the earliest symptoms, most experts agree that symptoms definitely can occur at blood lead levels of 60 µg/dl whole blood and therefore recommend a 40 µg/dl maximum. The central nervous system effects frequently are not reversible following discontinued exposure or chelation therapy and when improvement does occur, it is almost always only partial.

The peripheral neuropathy resulting from lead exposure characteristically involves only motor function with minimal sensory damage and has a marked predilection for the extensor muscles of the most active extremity. The peripheral neuropathy can occur with varying degrees of severity. The earliest and mildest form which can be detected in workers with blood lead levels as low as 50 µg/dl is manifested by slowing of motor nerve conduction velocity often without clinical symptoms. With progression of the neuropathy there is development of painless extensor muscle weakness usually involving the extensor muscles of the fingers and hand in the most active upper extremity, followed in severe cases by wrist drop or, much less commonly, foot drop.

In addition to slowing of nerve conduction, electromyographical studies in patients with blood lead levels greater than 50 µg/dl have demonstrated a decrease in the number of acting motor unit potentials, an increase in the duration of motor unit potentials, and spontaneous pathological activity including fibrillations and fasciculations. Whether these effects occur at levels of 40 µg/dl is undetermined.

While the peripheral neuropathies can occasionally be reversed with therapy, again such recovery is not assured particularly in the more severe neuropathies and often improvement is only partial. The lack of reversibility is felt to be due in part to segmental demyelination.

(c) Gastrointestinal. Lead may also affect the gastrointestinal system producing abdominal colic or diffuse abdominal pain, constipation, obstipation, diarrhea, anorexia, nausea and vomiting. Lead colic rarely develops at blood lead levels below 80 µg/dl.

(d) Renal. Renal toxicity represents one of the most serious health effects of lead poisoning. In the early stages of disease nuclear inclusion bodies can frequently be identified in proximal renal tubular cells. Renal function remains normal and the changes in this stage are probably reversible. With more advanced disease there is progressive interstitial fibrosis and impaired renal function. Eventually extensive interstitial fibrosis ensues with sclerotic glomeruli and dilated and atrophied proximal tubules; all represent end stage kidney disease. Azotemia can be progressive, eventually resulting in frank uremia necessitating dialysis. There is occasionally associated hypertension and hyperuricemia with or without gout.

Early kidney disease is difficult to detect. The urinalysis is normal in early lead nephropathy and the blood urea nitrogen and serum creatinine increase only when two-thirds of kidney function is lost. Measurement of creatinine clearance can often detect earlier disease as can other methods of measurement of glomerular filtration rate. An abnormal Ca-EDTA mobilization test has been used to differentiate between lead-induced and other nephropathies, but this procedure is not widely accepted. A form of Fanconi syndrome with aminoaciduria, glycosuria, and hyperphosphaturia indicating severe injury to the proximal renal tubules is occasionally seen in children.

(e) Reproductive effects. Exposure to lead can have serious effects on reproductive function in both males and females. In male workers exposed to lead there can be a decrease in sexual drive, impotence, decreased ability to produce healthy sperm, and sterility. Malformed sperm (teratospermia), decreased number of sperm (hypospermia), and sperm with decreased motility (asthenospermia) can all occur. Teratospermia has been noted at mean blood lead levels of 53 µg/dl and hypospermia and asthenospermia at 41 µg/dl. Furthermore, there appears to be a dose-response relationship for teratospermia in lead exposed workers.

Women exposed to lead may experience menstrual disturbances including dysmenorrhea, menorrhagia and amenorrhea. Following exposure to lead, women have a higher frequency of sterility, premature births, spontaneous miscarriages, and stillbirths.

Germ cells can be affected by lead and cause genetic damage in the egg or sperm cells before conception and result in failure to implant, miscarriage, stillbirth, or birth defects.

Infants of mothers with lead poisoning have a higher mortality during the first year and suffer from lowered birth weights, slower growth, and nervous system disorders.

Lead can pass through the placental barrier and lead levels in the mother's blood are comparable to concentrations of lead in the umbilical cord at birth. Transplacental passage becomes detectable at 12-14 weeks of gestation and increases until birth.

There is little direct data on damage to the fetus from exposure to lead but it is generally assumed that the fetus and newborn would be at least as susceptible to neurological damage as young children. Blood lead levels of 50-60 µg/dl in children can cause significant neurobehavioral impairments and there is evidence of hyperactivity at blood levels as low as 25 µg/dl. Given the overall body of literature concerning the adverse health effects of lead in children, WISHA feels that the blood lead level in children should be maintained below 30 µg/dl with a population mean of 15 µg/dl. Blood lead levels in the fetus and newborn likewise should not exceed 30 µg/dl.

Because of lead's ability to pass through the placental barrier and also because of the demonstrated adverse effects of lead on reproductive function in both the male and female as well as the risk of genetic damage of lead on both the ovum and sperm, WISHA recommends a 30 µg/dl maximum permissible blood lead level in both males and females who wish to bear children.

(f) Other toxic effects. Debate and research continue on the effects of lead on the human body. Hypertension has frequently been noted in occupationally exposed individuals although it is difficult to assess whether this is due to lead's adverse effects on the kidney or if some other mechanism is involved. Vascular and electrocardiographic changes have been detected but have not been well characterized. Lead is thought to impair thyroid function and interfere with the pituitary-adrenal axis, but again these effects have not been well defined.

(4) Medical evaluation.

The most important principle in evaluating a worker for any occupational disease including lead poisoning is a high index of suspicion on the part of the examining physician. As discussed in section (3), lead can affect numerous organ systems and produce a wide array of signs and symptoms, most of which are non-specific and subtle in nature at least in the early stages of disease. Unless serious concern for lead toxicity is present, many of the early clues to diagnosis may easily be overlooked.

The crucial initial step in the medical evaluation is recognizing that a worker's employment can result in exposure to lead. The worker will frequently be able to define exposures to lead and lead containing materials but often will not volunteer this information unless specifically asked. In other situations the worker may not know of any exposures to lead but the suspicion might be raised on the part of the physician because of the industry or occupation of the worker. Potential occupational exposure to lead and its compounds occur in many occupations in the construction industry, including demolition and salvaging operations, removal or encapsulation of materials containing lead, construction, alteration, repair or renovation of structures containing lead, transportation, disposal, storage or containment of lead or lead-containing materials on construction sites, and maintenance operations associated with construction activities.

Once the possibility for lead exposure is raised, the focus can then be directed toward eliciting information from the medical history, physical exam, and finally from laboratory data to evaluate the worker for potential lead toxicity.

A complete and detailed work history is important in the initial evaluation. A listing of all previous employment with information on job description, exposure to fumes or dust, known exposures to lead or other toxic substances, a description of any personal protective equipment used, and previous medical surveillance should all be included in the worker's record. Where exposure to lead is suspected, information concerning on-the-job personal hygiene, smoking or eating habits in work areas, laundry procedures, and use of any protective clothing or respiratory protection equipment should be noted. A complete work history is essential in the medical evaluation of a worker with suspected lead toxicity, especially when long term effects such as neurotoxicity and nephrotoxicity are considered.

The medical history is also of fundamental importance and should include a listing of all past and current medical conditions, current medications including proprietary drug intake, previous surgeries and hospitalizations, allergies, smoking history, alcohol consumption, and also nonoccupational lead exposures such as hobbies (hunting, riflery). Also known childhood exposures should be elicited. Any previous history of hematological, neurological, gastrointestinal, renal, psychological, gynecological, genetic, or reproductive problems should be specifically noted.

A careful and complete review of systems must be performed to assess both recognized complaints and subtle or slowly acquired symptoms which the worker might not appreciate as being significant. The review of symptoms should include the following:

- General—Weight loss, fatigue, decreased appetite.
- Head, eyes, ears, nose, throat (HEENT)—Headaches, visual disturbances or decreased visual acuity, hearing deficits or tinnitus, pigmentation of the oral mucosa, or metallic taste in mouth.
- Cardio-pulmonary—Shortness of breath, cough, chest pains, palpitations, or orthopnea.
- Gastrointestinal—Nausea, vomiting, heartburn, abdominal pain, constipation or diarrhea.
- Neurologic—Irritability, insomnia, weakness (fatigue), dizziness, loss of memory, confusion, hallucinations, incoordination, ataxia, decreased strength in hands or feet, disturbances in gait, difficulty in climbing stairs, or seizures.
- Hematologic—Pallor, easy fatigability, abnormal blood loss, melena.
- Reproductive (male and female and spouse where relevant)—History of infertility, impotence, loss of libido, abnormal menstrual periods, history of miscarriages, stillbirths, or children with birth defects.
- Musculo-skeletal—Muscle and joint pains.

The physical examination should emphasize the neurological, gastrointestinal, and cardiovascular systems. The worker's weight and blood pressure should be recorded and the oral mucosa checked for pigmentation characteristic of a possible Burtonian or lead line on the gingiva. It should be noted, however, that the lead line may not be present even in severe lead poisoning if good oral hygiene is practiced.

The presence of pallor on skin examination may indicate an anemia which, if severe, might also be associated with a tachycardia. If an anemia is suspected, an active search for blood loss should be undertaken including potential blood loss through the gastrointestinal tract.

A complete neurological examination should include an adequate mental status evaluation including a search for behavioral and psychological disturbances, memory testing, evaluation for irritability, insomnia, hallucinations, and mental clouding. Gait and coordination should be examined along with close observation for tremor. A detailed evaluation of peripheral nerve function including careful sensory and motor function testing is warranted. Strength testing particularly of extensor muscle groups of all extremities is of fundamental importance.

Cranial nerve evaluation should also be included in the routine examination.

The abdominal examination should include auscultation for bowel sounds and abdominal bruits and palpation for organomegaly, masses, and diffuse abdominal tenderness.

Cardiovascular examination should evaluate possible early signs of congestive heart failure. Pulmonary status should be addressed particularly if respirator protection is contemplated.

As part of the medical evaluation, the lead standard requires the following laboratory studies:

- Blood lead level.
- Hemoglobin and hematocrit determinations, red cell indices, and examination of the peripheral blood smear to evaluate red blood cell morphology.
- Blood urea nitrogen.
- Serum creatinine.
- Routine urinalysis with microscopic examination.
- A zinc protoporphyrin level.

In addition to the above, the physician is authorized to order any further laboratory or other tests which they deem necessary in accordance with sound medical practice. The evaluation must also include pregnancy testing or laboratory evaluation of male fertility if requested by the employee. Additional tests which are probably not warranted on a routine basis but may be appropriate when blood lead and ZPP levels are equivocal include delta aminolevulinic acid and coproporphyrin concentrations in the urine, and dark-field illumination for detection of basophilic stippling in red blood cells.

If an anemia is detected further studies including a careful examination of the peripheral smear, reticulocyte count, stool for occult blood, serum iron, total iron binding capacity, bilirubin, and, if appropriate, vitamin B12 and folate may be of value in attempting to identify the cause of the anemia.

If a peripheral neuropathy is suspected, nerve conduction studies are warranted both for diagnosis and as a basis to monitor any therapy.

If renal disease is questioned, a twenty-four hour urine collection for creatinine clearance, protein, and electrolytes may be indicated. Elevated uric acid levels may result from lead-induced renal disease and a serum uric acid level might be performed.

An electrocardiogram and chest X ray may be obtained as deemed appropriate.

Sophisticated and highly specialized testing should not be done routinely and where indicated should be under the direction of a specialist.

(5) Laboratory evaluation.

The blood lead level at present remains the single most important test to monitor lead exposure and is the test used in the medical surveillance program under the lead standard to guide employee medical removal. The ZPP has several advantages over the blood lead level. Because of its relatively recent development and the lack of extensive data concerning its interpretation, the ZPP currently remains an ancillary test.

This section will discuss the blood lead level and ZPP in detail and will outline their relative advantages and disadvantages. Other blood tests currently available to evaluate lead exposure will also be reviewed.

The blood lead level is a good index of current or recent lead absorption when there is no anemia present and when the worker has not taken any chelating agents. However, blood lead levels along with urinary lead levels do not necessarily indicate the total body burden of lead and are not adequate measures of past exposure. One reason for this is that lead has a high affinity for bone and up to 90% of the body's total lead is deposited there. A very important component of the total lead body burden is lead in soft tissue (liver, kidney, and brain). This fraction of the lead body burden, the biologically active lead, is not entirely reflected by blood lead levels since it is a function of the dynamics of lead absorption, distribution, deposition in bone and excretion. Following discontinuation of exposure to lead, the excess body burden is only slowly mobilized from bone and other relatively stable body stores and excreted. Consequently, a high blood lead level may only represent recent heavy exposure to lead without a significant total body excess and likewise a low blood lead level does not exclude an elevated total body burden of lead.

Also due to its correlation with recent exposures, the blood lead level may vary considerably over short time intervals.

To minimize laboratory error and erroneous results due to contamination, blood specimens must be carefully collected after thorough cleaning of the skin with appropriate methods using lead-free blood containers and analyzed by a reliable laboratory. Under the standard, samples must be analyzed in laboratories which are approved by OSHA. Analysis is to be made using atomic absorption spectrophotometry, anodic stripping voltammetry or any method which meets the accuracy requirements set forth by the standard.

The determination of lead in urine is generally considered a less reliable monitoring technique than analysis of whole blood primarily due to individual variability in urinary excretion capacity as well as the technical difficulty of obtaining accurate twenty-four hour urine collections. In addition, workers with renal insufficiency, whether due to lead or some other cause, may have decreased lead clearance and consequently urine lead levels may underestimate the true lead burden. Therefore, urine lead levels should not be used as a routine test.

The zinc protoporphyrin test, unlike the blood lead determination, measures an adverse metabolic effect of lead and as such is a better indicator of lead toxicity than the level of blood lead itself. The level of ZPP reflects lead absorption over the preceding three to four months, and therefore is a better indicator of lead body burden. The ZPP requires more time than the blood lead to read significantly elevated levels; the return to normal after discontinuing lead exposure is also slower. Furthermore, the ZPP test is simpler, faster, and less expensive to perform and no contamination is possible. Many investigators believe it is the most reliable means of monitoring chronic lead absorption.

Zinc protoporphyrin results from the inhibition of the enzyme ferrochelatase which catalyzes the insertion of an iron molecule into the protoporphyrin molecule, which then becomes heme. If iron is not inserted into the molecule then zinc, having a greater affinity for protoporphyrin, takes the place of the iron, forming ZPP.

An elevation in the level of circulating ZPP may occur at blood lead levels as low as 20-30 µg/dl in some workers. Once the blood lead level has reached 40 µg/dl there is more marked rise in the ZPP value from its normal range of less

than 100 µg/dl 100 ml. Increases in blood lead levels beyond 40 µg/100 g are associated with exponential increases in ZPP.

Whereas blood lead levels fluctuate over short time spans, ZPP levels remain relatively stable. ZPP is measured directly in red blood cells and is present for the cell's entire 120 day life-span. Therefore, the ZPP level in blood reflects the average ZPP production over the previous 3-4 months and consequently the average lead exposure during that time interval.

It is recommended that a hematocrit be determined whenever a confirmed ZPP of 50 µg/100 ml whole blood is obtained to rule out a significant underlying anemia. If the ZPP is in excess of 100 µg/100 ml and not associated with abnormal elevations in blood lead levels, the laboratory should be checked to be sure that blood leads were determined using atomic absorption spectrophotometry anodic stripping voltammetry, or any method which meets the accuracy requirements set forth by the standard by an OSHA approved laboratory which is experienced in lead level determinations. Repeat periodic blood lead studies should be obtained in all individuals with elevated ZPP levels to be certain that an associated elevated blood lead level has not been missed due to transient fluctuations in blood leads.

ZPP has a characteristic fluorescence spectrum with a peak at 594 nm which is detectable with a hematofluorimeter. The hematofluorimeter is accurate and portable and can provide on-site, instantaneous results for workers who can be frequently tested via a finger prick.

Careful attention must be given to calibration and quality control procedures. Limited data on blood lead-ZPP correlations and the ZPP levels which are associated with the adverse health effects discussed in subsection (3) are the major limitations of the test. Also it is difficult to correlate ZPP levels with environmental exposure and there is some variation of response with age and sex. Nevertheless, the ZPP promises to be an important diagnostic test for the early detection of lead toxicity and its value will increase as more data is collected regarding its relationship to other manifestations of lead poisoning.

Levels of delta-aminolevulinic acid (ALA) in the urine are also used as a measure of lead exposure. Increasing concentrations of ALA are believed to result from the inhibition of the enzyme delta-aminolevulinic acid dehydrase (ALA-D). Although the test is relatively easy to perform, inexpensive, and rapid, the disadvantages include variability in results, the necessity to collect a complete twenty-four hour urine sample which has a specific gravity greater than 1.010, and also the fact that ALA decomposes in the presence of light.

The pattern of porphyrin excretion in the urine can also be helpful in identifying lead intoxication. With lead poisoning, the urine concentrations of coproporphyrins I and II, porphobilinogen and uroporphyrin I rise. The most important increase, however, is that of coproporphyrin III; levels may exceed 5,000 µg/l in the urine in lead poisoned individuals, but its correlation with blood lead levels and ZPP are not as good as those of ALA. Increases in urinary porphyrins are not diagnostic of lead toxicity and may be seen in porphyria, some liver diseases, and in patients with high reticulocyte counts.

Summary. The Washington Industrial Safety and Health Act's standard for inorganic lead in the construction industry places significant emphasis on the medical surveillance of all workers exposed to levels of inorganic lead above 30 µg/m^3 TWA. The physician has a fundamental role in this surveillance program, and in the operation of the medical removal protection program.

Even with adequate worker education on the adverse health effects of lead and appropriate training in work practices, personal hygiene and other control measures, the physician has a primary responsibility for evaluating potential lead toxicity in the worker. It is only through a careful and detailed medical and work history, a complete physical examination and appropriate laboratory testing that an accurate assessment can be made. Many of the adverse health effects of lead toxicity are either irreversible or only partially reversible and therefore early detection of disease is very important.

This document outlines the medical monitoring program as defined by the occupational safety and health standard for inorganic lead. It reviews the adverse health effects of lead poisoning and describes the important elements of the history and physical examinations as they relate to these adverse effects. Finally, the appropriate laboratory testing for evaluating lead exposure and toxicity is presented.

It is hoped that this review and discussion will give the physician a better understanding of the WISHA standard with the ultimate goal of protecting the health and well-being of the worker exposed to lead under their care.

[Statutory Authority: Chapter 49.17 RCW. WSR 93-22-054 (Order 93-07), § 296-155-17654, filed 10/29/93, effective 12/10/93.]

PART B-2

HAZARD COMMUNICATION

WAC 296-155-180 Hazard communication. General.

The employer shall develop and maintain a hazard communication program as required by WAC 296-901-140, which will provide information to all employees relative to hazardous chemicals or substances to which they are exposed, or may become exposed, in the course of their employment.

[Statutory Authority: RCW 49.17.010, 49.17.040, 49.17.050, 49.17.060 and 29 C.F.R. 1910 Subpart Z. WSR 14-07-086, § 296-155-180, filed 3/18/14, effective 5/1/14. Statutory Authority: RCW 49.17.010, [49.17].040, and [49.17].050. WSR 01-11-038, § 296-155-180, filed 5/9/01, effective 9/1/01. Statutory Authority: Chapter 49.17 RCW. WSR 94-16-145, § 296-155-180, filed 8/3/94, effective 9/12/94; WSR 89-11-035 (Order 89-03), § 296-155-180, filed 5/15/89, effective 6/30/89.]

PART C

PERSONAL PROTECTIVE AND LIFE SAVING EQUIPMENT

WAC 296-155-200 General requirements for personal protective equipment (PPE). (1) Supplying personal protective equipment

(a) Personal protective equipment (PPE) must be used wherever physical contact, absorption, or inhalation of a hazard could cause any injury or impairment to the function of any part of the body.

These hazards include:

• Hazardous processes;

• Environmental hazards;

• Chemical hazards;

• Radiological hazards;

OR

• Mechanical irritants.

Note: PPE includes:

• Protective equipment for eyes, face, head, hearing, and extremities;

• Protective clothing;

• Respiratory devices;

AND

• Protective shields and barriers.

(b) PPE must be maintained in a sanitary and reliable condition.

Reference: For requirements on maintaining specific personal protective equipment (PPE), see the following rules.

• Chapter 296-842 WAC, Respirators;

AND

• Chapter 296-817 WAC, Hearing loss prevention.

(c) If employees provide their own protective equipment, then the employer is responsible to make sure the PPE is:

• Adequate;

• Properly maintained;

AND

• Sanitary.

(d) All personal protective equipment must be of safe design and construction for the work to be performed.

(2) Minimum clothing requirements.

(a) Employers must ensure that employees wear at least:

• A short-sleeved shirt;

• Long pants;

AND

• Shoes that meet the requirements of WAC 296-155-212, Foot protection.

Definition:

A ***short-sleeved shirt*** covers the top of the shoulder and has material extending down the arm. If a short-sleeved shirt has a seam at the end of the shoulder, the material must extend down the arm from the seam.

Long pants have legs that extend past the knee when the wearer stands and leaves no exposed skin on the lower leg.

(b) Where there is a danger of contact with moving parts of machinery, or the work process is such that a hazard exists:

• The clothing of employees must fit closely about the body.

• Dangling neck wear, bracelets, wristwatches, rings, or similar articles must not be worn by employees.

Note: For additional related requirements see WAC 296-155-205, Head protection.

(3) The employer must require employees to wear appropriate PPE in all operations where:

• There is an exposure to hazardous conditions;

OR

• WAC 296-155-200, General requirements for personal protective equipment (PPE), indicates a need for using such equipment to reduce the hazards to the employees.

(4) Employees must comply with job safety practices and procedures and PPE requirements that are relevant to the job site.

(5) High visibility garments.

(a) During daylight hours, when employees' duties are performed in close proximity to moving vehicles, employers must make sure that employees wear a high-visibility safety vest, shirt, or jacket that is fluorescent yellow-green, fluorescent orange-red, or fluorescent red in color. This garment must always be worn as an outer garment.

Definition:

For the purpose of this rule, ***hours of darkness*** means from one-half hour before sunset to one-half hour after sunrise.

(b) During hours of darkness, when employees' duties are performed in close proximity to moving vehicles, the employer must make sure that employees wear, at a minimum, a high-visibility safety vest, shirt, or jacket:

• Designed according to ANSI/ISEA 107-1999 Class 2 specifications;

• Worn as an outer garment;

AND

• Worn to provide three hundred sixty degrees of visibility around the employee.

Note: A high-visibility garment meets Class 2 specifications if the garment:

• Has an ANSI "Class 2" label;

OR

• Has at least seven hundred seventy-five square inches of background material and two hundred one square inches of retroflective material that encircles the torso and is placed to provide three hundred sixty degrees of visibility around the employee.

Note: • Fading and soiling may degrade the high-visibility characteristics of the garments.

• ANSI/ISEA 107-1999 is available by:

– Purchasing copies of ANSI/ISEA 107-1999 by writing:

– American National Standards Institute

11 West 42nd Street

New York, NY 10036

OR

– Contacting the ANSI web site at http://web.ansi.org/.

OR

• Reading a copy of ANSI/ISEA 107-1999 at any Washington state library.

(6) Payment for PPE. Except as provided in (a) through (e) of this subsection, the protective equipment, including PPE, used to comply with this chapter shall be provided by the employer at no cost to employees.

(a) The employer is not required to pay for nonspecialty safety-toe protective footwear (including steel-toe shoes or steel-toe boots) and nonspecialty prescription safety eyewear, provided that the employer permits such items to be worn off the job site.

(b) When the employer provides metatarsal guards and allows the employee, at his or her request, to use shoes or boots with built-in metatarsal protection, the employer is not required to reimburse the employee for the shoes or boots.

(c) The employer is not required to pay for:

• Everyday clothing, such as long-sleeve shirts, long pants, street shoes, and normal work boots;

• Ordinary clothing, skin creams, or other items used solely for protection from weather, such as winter coats, jackets, gloves, parkas, rubber boots, hats, raincoats, ordinary sunglasses, and sunscreen.

(d) The employer must pay for replacement PPE, except when the employee has lost or intentionally damaged the PPE.

(e) Where an employee provides adequate protective equipment he or she owns to meet the requirements of this chapter, the employer may allow the employee to use it and is not required to reimburse the employee for that equipment. The employer shall not require an employee to provide or pay for his or her own PPE, unless the PPE is excepted in (a) through (d) of this subsection.

[Statutory Authority: RCW 49.17.010, 49.17.040, 49.17.050, 49.17.060. WSR 09-05-071, § 296-155-200, filed 2/17/09, effective 4/1/09; WSR 04-24-089, § 296-155-200, filed 12/1/04, effective 1/1/05. Statutory Authority: RCW 49.17.010, [49.17].040, and [49.17].050. WSR 01-11-038, § 296-155-200, filed 5/9/01, effective 9/1/01. Statutory Authority: Chapter 49.17 RCW. WSR 94-15-096 (Order 94-07), § 296-155-200, filed 7/20/94, effective 9/20/94. Statutory Authority: RCW 49.17.040 and 49.17.050. WSR 86-03-074 (Order 86-14), § 296-155-200, filed 1/21/86; Order 76-29, § 296-155-200, filed 9/30/76; Order 74-26, § 296-155-200, filed 5/7/74, effective 6/6/74.]

WAC 296-155-201 Definitions applicable to this chapter. (1) "Catenary life line" means a horizontal rope between two fixed anchorages, independent of the work surface, to which the lanyard is attached, either by tying or by means of a sliding connection. A catenary life line shall be capable of supporting a minimum dead weight of 5,400 pounds per person, applied at the midpoint of the line.

(2) "Contaminant" means any material which by reason of its action upon, within, or to a person or object is likely to cause physical harm.

(3) "Dropline" means a vertical rope from a fixed anchorage, independent of the work surface, to which the lanyard is affixed or tied.

(4) "Fixed anchorage" means a secure point of attachment, not a part of the work surface, for droplines, lifelines, catenary life lines, or lanyards. The fixed anchorage and its appurtenances shall be capable of supporting a minimum dead weight of 5,400 pounds per worker.

(5) "Lanyard" means a rope, suitable for supporting one person. One end is fastened to a safety belt or harness and the other end is secured to a substantial object or a safety line.

(6) "Lifeline" means a rope, suitable for supporting one person, to which a lanyard or safety belt (or harness) is attached.

(7) "O.D." means optical density and refers to the light refractive characteristics of a lens.

(8) "Radiant energy" means energy that travels outward in all directions from its source.

(9) "Safety belt" means a device, usually worn around the waist which, by reason of its attachment to a lanyard and lifeline or a structure, will prevent a worker from falling.

[Statutory Authority: RCW 49.17.040 and 49.17.050. WSR 86-03-074 (Order 86-14), § 296-155-201, filed 1/21/86; Order 76-6, § 296-155-201, filed 3/1/76.]

WAC 296-155-203 Confined spaces. All work conducted in a confined space shall comply with the provisions of chapter 296-62 WAC Part M, and the following sections.

[Statutory Authority: Chapter 49.17 RCW. WSR 94-15-096 (Order 94-07), § 296-155-203, filed 7/20/94, effective 9/20/94. Statutory Authority: RCW 49.17.040 and 49.17.050. WSR 86-03-074 (Order 86-14), § 296-155-203, filed 1/21/86.]

WAC 296-155-20301 Definitions. Confined space means a space that:

(1) Is large enough and so configured that an employee can bodily enter and perform assigned work; and

(2) Has limited or restricted means for entry or exit (for example, tanks, vessels, silos, storage bins, hoppers, vaults, and pits are spaces that may have limited means of entry); and

(3) Is not designed for continuous employee occupancy.

"Corrosives" means substances which in contact with living tissue cause destruction of the tissue by chemical action.

"Hazardous atmosphere" means an atmosphere that may expose employees to the risk of death, incapacitation, impairment of ability to self-rescue (that is, escape unaided from a permit space), injury, or acute illness from one or more of the following causes:

(1) Flammable gas, vapor, or mist in excess of ten percent of its lower flammable limit (LFL);

(2) Airborne combustible dust at a concentration that meets or exceeds its LFL;

Note: This concentration may be approximated as a condition in which the dust obscures vision at a distance of five feet (1.52m) or less.

(3) Atmospheric oxygen concentration below 19.5 percent or above 23.5 percent;

(4) Atmospheric concentration of any substance for which a dose or a permissible exposure limit is published in chapter 296-62 WAC, general occupational health standards, or chapter 296-841 WAC, Airborne contaminants, and which could result in employee exposure in excess of its dose or permissible exposure limit;

Note: An atmospheric concentration of any substance that is not capable of causing death, incapacitation, impairment of ability to self-rescue, injury, or acute illness due to its health effects is not covered by this provision.

(5) Any other atmospheric condition that is immediately dangerous to life or health.

Note: For air contaminants for which WISHA has not determined a dose or permissible exposure limit, other sources of information, such as safety data sheets that comply with the Hazard Communication Standard, WAC 296-901-140, published information, and internal documents can provide guidance in establishing acceptable atmospheric conditions.

"Irritants" means substances which on immediate, prolonged, or repeated contact with normal living tissue will induce a local inflammatory reaction.

"Oxygen deficient atmospheres" means atmospheres at sea level having less than 19.5% oxygen by volume or having a partial pressure of 148 millimeters of mercury or less. This may deviate when working at higher altitudes and should be determined for an individual location. Factors such as acclimatization, physical condition of persons involved, etc., must be considered for such circumstances and condi-

tions. (See chapter 296-62 WAC, Part M, permit-required confined spaces.)

"Toxicants" means substances which have the inherent capacity to produce personal injury or illness to persons by absorption through any body surface.

[Statutory Authority: RCW 49.17.010, 49.17.040, 49.17.050, 49.17.060 and 29 C.F.R. 1910 Subpart Z. WSR 14-07-086, § 296-155-20301, filed 3/18/14, effective 5/1/14. Statutory Authority: RCW 49.17.010, 49.17.040, 49.17.050, 49.17.060. WSR 07-05-062, § 296-155-20301, filed 2/20/07, effective 4/1/07; WSR 05-03-093, § 296-155-20301, filed 1/18/05, effective 3/1/05. Statutory Authority: RCW 49.17.010, [49.17].040, and [49.17].050. WSR 01-11-038, § 296-155-20301, filed 5/9/01, effective 9/1/01. Statutory Authority: RCW 49.17.040, [49.17].050 and [49.17].060. WSR 95-17-036, § 296-155-20301, filed 8/9/95, effective 9/25/95. Statutory Authority: Chapter 49.17 RCW. WSR 95-04-007, § 296-155-20301, filed 1/18/95, effective 3/1/95; WSR 91-24-017 (Order 91-07), § 296-155-20301, filed 11/22/91, effective 12/24/91. Statutory Authority: RCW 49.17.040 and 49.17.050. WSR 86-03-074 (Order 86-14), § 296-155-20301, filed 1/21/86.]

WAC 296-155-20307 Confined space work on sewer systems under construction. New systems under construction or new installations which have not yet been connected to a used system, may substitute forced ventilation for the testing requirements of chapter 296-62 WAC Part M provided:

(1) Ventilation is effectively provided at least five minutes prior to entry into the confined space;

(2) Ventilation is provided, as required by WAC 296-62-110, et seq., which supplies a continuous flow of air;

(3) Ventilation exhaust is discharged so as to present no hazard to other employees;

(4) An attendant is provided at the surface when there are employees in the manhole or pipe. The attendant shall not leave the manhole unattended until such time as all employees are out and the cover has been replaced; and

(5) All other requirements for confined spaces are observed. See chapter 296-62 WAC Part M.

[Statutory Authority: Chapter 49.17 RCW. WSR 94-15-096 (Order 94-07), § 296-155-20307, filed 7/20/94, effective 9/20/94. Statutory Authority: RCW 49.17.040 and 49.17.050. WSR 86-03-074 (Order 86-14), § 296-155-20307, filed 1/21/86.]

WAC 296-155-205 Head protection. (1) All employees on any construction site shall be provided an individual hard hat which meets all requirements of (a) through (c) of this subsection.

(a) Hard hats for the protection of employees against impact and/or penetration of falling and flying objects shall meet the specifications contained in American National Standards Institute, Z89.1-1969, Safety Requirements for Industrial Head Protection.

(b) The employer must provide each employee with head protection that meets any of the following American National Standards Institute (ANSI) for industrial head protection:

(i) Z89.1-2009;

(ii) Z89.1-2003; or

(iii) Z89.1-1997.

(c) Hard hats for the head protection of employees exposed to high voltage electrical shock and burns shall meet the specifications contained in American National Standards Institute, Z89.2-1971.

(2) All employees must have their individual hard hats on site and readily available at all times.

(3) All employees shall wear a hard hat on any construction site whenever there is a potential exposure to danger of flying or falling objects to persons working or occupying the area.

Note: The hard hat may be removed whenever there is no potential exposure to a hazard.

(4)(a) Employees working on asphalt paving crews exposed to extreme temperatures from hot mix and not exposed to falling objects do not have to wear protective hard hats.

(b) Flaggers working with asphalt paving operations must comply with the requirements of WAC 296-155-305.

(5) Caps with metal buttons or metal visors shall not be worn around electrical hazards.

(6) Employees working near moving machinery or in locations which present a hair-catching or fire hazard shall wear caps, nets or other head and face protection that will completely contain the hair.

[Statutory Authority: RCW 49.17.010, 49.17.040, 49.17.050, 49.17.060, and chapter 49.17 RCW. WSR 14-03-013, § 296-155-205, filed 1/7/14, effective 2/10/14. Statutory Authority: RCW 49.17.010, 49.17.040, 49.17.050, 49.17.060. WSR 09-05-071, § 296-155-205, filed 2/17/09, effective 4/1/09. Statutory Authority: RCW 49.17.010, [49.17].040, [49.17].050, 2000 c 239, and chapter 34.05 RCW. WSR 01-04-015, § 296-155-205, filed 1/26/01, effective 2/28/01. Statutory Authority: Chapter 49.17 RCW. WSR 91-11-070 (Order 91-01), § 296-155-205, filed 5/20/91, effective 6/20/91; WSR 89-11-035 (Order 89-03), § 296-155-205, filed 5/15/89, effective 6/30/89. Statutory Authority: RCW 49.17.040 and 49.17.050. WSR 86-03-074 (Order 86-14), § 296-155-205, filed 1/21/86; Order 74-26, § 296-155-205, filed 5/7/74, effective 6/6/74.]

WAC 296-155-210 Hearing protection. The hearing protection requirements of chapter 296-817 WAC, Hearing loss prevention (noise), apply.

[Statutory Authority: RCW 49.17.010, 49.17.040, 49.17.050, and 49.17.060. WSR 03-11-060, § 296-155-210, filed 5/19/03, effective 8/1/03. Statutory Authority: RCW 49.17.040 and 49.17.050. WSR 83-24-013 (Order 83-34), § 296-155-210, filed 11/30/83; Order 74-26, § 296-155-210, filed 5/7/74, effective 6/6/74.]

WAC 296-155-211 Leg protection. Employees whose duties require them to operate a power chain saw shall wear flexible ballistic nylon pads, sewn or otherwise fastened into the trousers, or other equivalent protection that will protect the vulnerable areas of the legs.

[Statutory Authority: RCW 49.17.040 and 49.17.050. WSR 86-03-074 (Order 86-14), § 296-155-211, filed 1/21/86.]

WAC 296-155-212 Foot protection. (1) Substantial footwear, made of leather or other equally firm material, shall be worn by employees in any occupation in which there is a danger of injury to the feet through falling or moving objects, or from burning, scalding, cutting, penetration, or like hazard.

(a) The soles and heels of such footwear shall be of a material that will not create a slipping hazard.

(b) Shoes made of leather or other firm materials that have soft athletic-type soles which would protect employees from foot injuries and at the same time, provide soft and firm footing while working under specialty requirements or with specialty materials are acceptable if meeting safety shoe requirements established by OSHA or ANSI.

(c) Footwear that has deteriorated to a point where it does not provide the required protection shall not be used.

(2) Calks or other suitable footwear, which will afford reasonable protection from slipping, shall be worn while working on logs, poles, pilings, or similar forest products.

(3) Traditional tennis shoes, shoes with canvas tops, or thin or soft soled athletic shoes, open toed sandals, slippers, dress shoes or other similar type shoes shall not be worn. Soft or athletic-type soles with uppers of leather or other substantial material may be used where firm footing is desired and where minimal danger of injury to feet from falling or moving objects.

(4) Safety-toe footwear for employees shall meet the requirements and specifications in American National Standard for Men's Safety-Toe Footwear, Z41.1-1967.

[Statutory Authority: Chapter 49.17 RCW. WSR 94-15-096 (Order 94-07), § 296-155-212, filed 7/20/94, effective 9/20/94; WSR 89-11-035 (Order 89-03), § 296-155-212, filed 5/15/89, effective 6/30/89. Statutory Authority: RCW 49.17.040 and 49.17.050. WSR 86-03-074 (Order 86-14), § 296-155-212, filed 1/21/86; Order 74-26, § 296-155-212, filed 5/7/74, effective 6/6/74.]

WAC 296-155-215 Eye and face protection. (1) General.

(a) Employees shall use eye and face protection equipment when machines or operations present potential eye or face injury from physical, chemical, or radiation agents.

(b) Eye and face protection equipment required by this part shall meet the requirements specified in American National Standards Institute, Z87.1-1968, Practice for Occupational and Educational Eye and Face Protection.

(c) Employees whose vision requires the use of corrective lenses in spectacles, when required by this regulation to wear eye protection, shall be protected by goggles or spectacles of one of the following types:

(i) Spectacles whose protective lenses provide optical correction;

(ii) Goggles that can be worn over corrective spectacles without disturbing the adjustment of the spectacles.

(iii) Goggles that incorporate corrective lenses mounted behind the protective lenses.

(d) Face and eye protection equipment shall be kept clean and in good repair. The use of this type equipment with structural or optical defects shall be prohibited.

(e) Table C-1 shall be used as a guide in the selection of face and eye protection for the hazards and operations noted.

(f) Protectors shall meet the following minimum requirements:

(i) They shall provide adequate protection against the particular hazards for which they are designed.

(ii) They shall be reasonably comfortable when worn under the designated conditions.

(iii) They shall fit snugly and shall not unduly interfere with the movements of the wearer.

(iv) They shall be durable.

(v) They shall be capable of being disinfected.

(vi) They shall be easily cleanable.

(g) Every protector shall be distinctly marked to facilitate identification only of the manufacturer.

(h) When limitations or precautions are indicated by the manufacturer, they shall be transmitted to the user and care taken to see that such limitations and precautions are strictly observed.

TABLE C-1

EYE AND FACE PROTECTION SELECTION GUIDE

1. GOGGLES, flexible fitting, regular ventilation
2. GOGGLES, flexible fitting, hooded ventilation
3. GOGGLES, cushioned fitting, rigid body

*4. SPECTACLES, metal frame, with sideshields

*5. SPECTACLES, plastic frame with sideshields

*6. SPECTACLES, metal-plastic frame, with sideshields

**7. WELDING GOGGLES, eyecup type, tinted lenses (illustrated)

7A. CHIPPING GOGGLES, eyecup type, clear safety lenses (not illustrated)

**8. WELDING GOGGLES, coverspec type tinted lenses (illustrated)

8A. CHIPPING GOGGLES, coverspec type, clear safety lenses (not illustrated)

**9. WELDING GOGGLES, coverspec type, tinted plate lens

10. FACE SHIELD (available with plastic or mesh window)
11. WELDING HELMETS

*Nonside shield spectacles are available for limited hazard use requiring only frontal protection.

**See Table C-2 in (2) of this section, Filter lens shade numbers for protection against radiant energy.

APPLICATIONS		
OPERATION	HAZARDS	RECOMMENDED PROTECTORS: Underscored Numbers Signify Preferred Protection
ACETYLENE-BURNING ACETYLENE-CUTTING ACETYLENE-WELDING	SPARKS, HARMFUL RAYS, MOLTEN METAL, FLYING PARTICLES	7, 8, 9
CHEMICAL HANDLING	SPLASH, ACID BURNS, FUMES	2, 10 (for severe exposure add 10 over 2)
CHIPPING	FLYING PARTICLES	1, 3, 4, 5, 6, 7A, 8A
ELECTRIC (ARC) WELDING	SPARKS, INTENSE RAYS, MOLTEN METAL	9, 11 (11 in combination with 4, 5, 6, in tinted lenses, advisable)
FURNACE OPERATIONS	GLARE, HEAT, MOLTEN METAL	7, 8, 9 (for severe exposure add 10)
GRINDING-LIGHT	FLYING PARTICLES	1, 3, 4, 5, 6, 10
GRINDING-HEAVY	FLYING PARTICLES	1, 3, 7A, 8A (for severe exposure add 10)
LABORATORY	CHEMICAL SPLASH, GLASS BREAKAGE	2 (10 when in combination with 4, 5, 6)
MACHINING	FLYING PARTICLES	1, 3, 4, 5, 6, 10

APPLICATIONS		
OPERATION	HAZARDS	RECOMMENDED PROTECTORS: Underscored Numbers Signify Preferred Protection
MOLTEN METALS	HEAT, GLARE, SPARKS, SPLASH	7, 8 (10 in combination with 4, 5, 6, in tinted lenses)
SPOT WELDING	FLYING PARTICLES, SPARKS	1, 3, 4, 5, 6, 10

(2) Protection against radiant energy. (a) Selection of shade numbers for welding filter. Table C-2 shall be used as a guide for the selection of the proper shade numbers of filter lenses or plates used in welding. Shades more dense than those listed may be used to suit the individual's needs.

TABLE C-2

FILTER LENS SHADE NUMBERS FOR PROTECTION AGAINST RADIANT ENERGY

Welding Operation	Shade number
Shielded metal-arc welding 1/16-, 3/32-, 1/8-, 5/32-inch diameter electrodes	10
Gas-shielded arc welding (nonferrous) 1/16-, 3/32-, 1/8-, 5/32-inch diameter electrodes	11
Gas-shielded arc welding (ferrous) 1/16-, 3/32-, 1/8-, 5/32-inch diameter electrodes	12
Shielded metal-arc welding 3/16-, 7/32-, 1/4-inch diameter electrodes	12
5/16-, 3/8-inch diameter electrodes	14
Atomic hydrogen welding	10-14
Carbon-arc welding	14
Soldering	2
Torch brazing	3 or 4
Light cutting, up to 1 inch	3 or 4
Medium cutting, 1 inch to 6 inches	4 or 5
Heavy cutting, over 6 inches	5 or 6
Gas welding (light), up to 1/8-inch	4 or 5
Gas welding (medium), 1/8-inch to 1/2-inch	5 or 6
Gas welding (heavy), over 1/2-inch	6 or 9

(b) Laser protection.

(i) Employees whose occupation or assignment requires potentially hazardous exposure (see WAC 296-62-09005(4)) to laser radiation shall wear suitable laser safety goggles which will protect for the specific wavelength of the laser and be of optical density (O.D.) adequate for the energy involved. Table C-3 lists the maximum power or energy density for which adequate protection is afforded by glasses of optical densities from 5 through 8.

TABLE C-3

SELECTING LASER SAFETY GLASS

INTENSITY	ATTENUATION	
CW maximum power density (watts/cm^2)	Optical density (O.D.)	Attenuation factor
10^{-2}	5	10^5
10^{-1}	6	10^6
1.0	7	10^7
10.0	8	10^8

Output levels falling between lines in this table shall require the higher optical density.

(ii) All protective goggles shall bear a label identifying the following data:

(a) The laser wavelengths for which use is intended;

(b) The optical density of those wavelengths.

(c) The visible light transmission.

[Statutory Authority: Chapter 49.17 RCW. WSR 94-15-096 (Order 94-07), § 296-155-215, filed 7/20/94, effective 9/20/94. Statutory Authority: RCW 49.17.040 and 49.17.050. WSR 85-01-022 (Order 84-24), § 296-155-215, filed 12/11/84; Order 74-26, § 296-155-215, filed 5/7/74, effective 6/6/74.]

WAC 296-155-220 Respiratory protection. The respiratory protection requirements applicable to construction work under this section are identical to those set forth in chapter 296-842 WAC.

[Statutory Authority: RCW 49.17.010, 49.17.040, 49.17.050, 49.17.060. WSR 05-03-093, § 296-155-220, filed 1/18/05, effective 3/1/05. Statutory Authority: RCW 49.17.010, [49.17].040 and [49.17].050. WSR 99-10-071, § 296-155-220, filed 5/4/99, effective 9/1/99. Statutory Authority: RCW 49.17.040 and 49.17.050. WSR 83-15-017 (Order 83-19), § 296-155-220, filed 7/13/83, effective 9/12/83; Order 74-26, § 296-155-220, filed 5/7/74, effective 6/6/74.]

WAC 296-155-235 Working over or adjacent to water. (1) When an employee is employed under conditions which expose them to a risk of drowning, they shall wear a U.S. Coast Guard approved life saving device, unless it can be shown that conditions, such as shallow water, are such that flotation would not be achieved.

(2) Prior to and after each use, the buoyant life saving device shall be inspected for defects which would alter their strength or buoyancy. Defective units shall not be used.

(3) Ring buoys with at least ninety feet of line shall be provided and readily available for emergency rescue operations. Distance between ring buoys shall not exceed two hundred feet.

(4) At least one lifesaving skiff shall be immediately available at locations where employees are working over or adjacent to water. Each skiff, or skiffs, shall:

(a) Be suitable for conditions where used.

(b) Be equipped with oar locks securely attached to gunwales, oars, one boat hook, and one cork ring buoy with fifty feet of suitable line attached.

(5) Whenever boats or skiffs cannot be used, due to swift currents, life lines close to the water surface shall be provided and, wherever practicable, a line shall be stretched across the stream with tag lines.

(6) Where workers are transported by boat or barge, only such number of persons shall be carried that can be safely accommodated on fixed seats. Capacity showing number of persons shall be plainly marked on vessel.

(7) All workers shall be provided with a U.S. Coast Guard approved buoyant life saving device while transported

in open boats and/or barges, and where deemed necessary by the department, workers shall wear same while in transport.

[Statutory Authority: Chapter 49.17 RCW. WSR 94-15-096 (Order 94-07), § 296-155-235, filed 7/20/94, effective 9/20/94; Order 74-26, § 296-155-235, filed 5/7/74, effective 6/6/74.]

WAC 296-155-240 Sterilization of protective equipment. Goggles, gloves, respirators and other protectors shall not be interchanged among employees for use unless they have been thoroughly cleaned since last use.

[Order 74-26, § 296-155-240, filed 5/7/74, effective 6/6/74.]

PART C-1

FALL PROTECTION REQUIREMENTS FOR CONSTRUCTION

WAC 296-155-24601 Scope and application. Chapter 296-155 WAC, Part C-1 sets forth requirements for employers to provide and enforce the use of fall protection for employees performing activities covered under this chapter.

Note: Additional standards requiring fall protection include:

- Chapter 296-869 WAC, vehicle mounted aerial platforms, and boom supported elevating work platforms.
- Chapter 296-874 WAC, Scaffolds.
- Chapter 296-876 WAC, Ladders, portable and fixed.
- Chapter 296-155 WAC, Part J: Stairways; Part L: Cranes, rigging, and personnel lifting; Part M: Pile driving; Part O: Placing and removal of forms, and vertical slip forms; Part P: Steel erection temporary floors.

[Statutory Authority: RCW 49.17.010, 49.17.040, 49.17.050, 49.17.060 and 29 C.F.R. 1926, Subpart M, Fall Protection. WSR 13-04-073, § 296-155-24601, filed 2/4/13, effective 4/1/13.]

WAC 296-155-24603 Definitions. Affected area means the distance away from the edge of an excavation equal to the depth of the excavation up to a maximum distance of fifteen feet. For example, an excavation ten feet deep has an affected area extending ten feet from the edge of any side of the excavation.

Anchorage means a secure point of attachment for lifelines, lanyards, or deceleration devices which is capable of withstanding the forces specified in this part.

Catch platform means a type of fall arrest system that consists of a platform installed within four vertical feet of the fall hazard, is at least forty-five inches wide and is equipped with a standard guardrail system on all exposed sides.

Catenary line - See horizontal lifeline.

Competent person means an individual knowledgeable of fall protection equipment, including the manufacturer's recommendations and instructions for the proper use, inspection, and maintenance; and who is capable of identifying existing and potential fall hazards; and who has the authority to take prompt corrective action to eliminate those hazards; and who is knowledgeable of the rules contained in this part regarding the installation, use, inspection, and maintenance of fall protection equipment and systems.

Connector means a device which is used to connect parts of the personal fall arrest system and positioning device systems together. It may be an independent component of the system, such as a carabiner, or it may be an integral component of part of the system (such as a buckle or D-ring sewn into a harness, or a snap hook spliced or sewn to a lanyard or self-retracting lanyard).

Deceleration device means any mechanism, such as a rope grab, ripstitch lanyard, specifically woven lanyard, tearing or deforming lanyards, automatic self-retracting lifelines/lanyards, etc., which serves to dissipate a substantial amount of energy during a fall arrest, or otherwise limit the energy imposed on an employee during fall arrest.

Deceleration distance means the additional vertical distance a falling employee travels, excluding lifeline elongation and free fall distance, before stopping, from the point at which the deceleration device begins to operate. It is measured as the distance between the location of an employee's full body harness attachment point at the moment of activation (at the onset of fall arrest forces) of the deceleration device during a fall, and the location of that attachment point after the employee comes to a full stop.

Dropline means a vertical lifeline secured to an upper anchorage for the purpose of attaching a lanyard or device.

Equivalent means alternative designs, materials, or methods to protect against a hazard which the employer can demonstrate and will provide an equal or greater degree of safety for employees than the methods, materials or designs specified in this standard.

Fall arrest system means a fall protection system that will arrest a fall from elevation. Fall arrest systems include personal fall arrest systems that are worn by the user, catch platforms, and safety nets.

Fall distance means the actual distance from the worker's support to the level where a fall would stop.

Fall protection work plan means a written planning document in which the employer identifies all areas on the job site where a fall hazard of ten feet or more exists. The plan describes the method or methods of fall protection to be used to protect employees, and includes the procedures governing the installation, use, inspection, and removal of the fall protection method or methods which are selected by the employer. See WAC 296-155-24611(2).

Fall restraint system means a system in which all necessary components function together to restrain/prevent an employee from falling to a lower level. Types of fall restraint systems include standard guardrail systems, personal fall restraint systems, warning line systems, or a warning line system and safety monitor.

Floor hole means an opening measuring less than twelve inches but more than one inch in its least dimension in any floor, roof, platform, or surface through which materials but not persons may fall, such as a belt hole, pipe opening, or slot opening.

Floor opening means an opening measuring twelve inches or more in its least dimension in any floor, roof, platform, or surface through which persons may fall.

Free fall means the act of falling before a personal fall arrest system begins to apply force to arrest the fall.

Free fall distance means the vertical displacement of the fall arrest attachment point on the employee's full body harness between onset of the fall and just before the system begins to apply force to arrest the fall. This distance excludes deceleration distance, and lifeline/lanyard elongation, but includes any deceleration device slide distance or self-retract-

ing lifeline/lanyard extension before they operate and fall arrest forces occur.

Full body harness means a configuration of connected straps that meets the requirements specified in ANSI Z359.1-2007, that may be adjustable to distribute a fall arresting force over at least the thighs, shoulders and pelvis, with provisions for attaching a lanyard, lifeline, or deceleration devices.

Full body harness system means a full body harness and lanyard which is either attached to an anchorage meeting the requirements of this part; or it is attached to a horizontal or vertical lifeline which is properly secured to an anchorage(s) capable of withstanding the forces specified in this part.

Handrail means a rail used to provide employees with a handhold for support.

Hardware means snap hooks, D-rings, bucklers, carabiners, adjusters, O-rings, that are used to attach the components of a fall protection system together.

Hazardous slope means a slope where normal footing cannot be maintained without the use of devices due to the pitch of the surface, weather conditions, or surface material.

Horizontal lifeline means a rail, rope, wire, or synthetic cable that is installed in a horizontal plane between two anchorages and used for attachment of a worker's lanyard or lifeline device while moving horizontally; used to control dangerous pendulum like swing falls.

Lanyard means a flexible line of webbing, rope, or cable used to secure a positioning harness or full body harness to a lifeline or an anchorage point usually two, four, or six feet long.

Leading edge means the advancing edge of a floor, roof, or formwork which changes location as additional floor, roof, or formwork sections are placed, formed, or constructed.

Lifeline means a vertical line from a fixed anchorage or between two horizontal anchorages, independent of walking or working surfaces, to which a lanyard or device is secured. Lifeline as referred to in this text is one which is part of a fall protection system used as back-up safety for an elevated worker or as a restraint for workers on a flat or sloped surface.

Locking snap hook means a connecting snap hook that requires two separate forces to open the gate; one to deactivate the gatekeeper and a second to depress and open the gate which automatically closes when released; used to minimize roll out or accidental disengagement.

Low pitched roof means a roof having a slope equal to or less than four in twelve.

Mechanical equipment means all motor or human propelled wheeled equipment except for wheelbarrows, mopcarts, robotic thermoplastic welders and robotic crimpers.

Personal fall arrest system means a fall arrest system that is worn by the employee to arrest the employee in a fall from elevation. It consists of an anchor point, connectors, a full body harness, and may include a lanyard, deceleration device, lifeline, or suitable combinations of these.

Personal fall restraint system means a fall restraint system that is worn by the employee to keep the employee from reaching a fall point, such as the edge of a roof or elevated work surface. It consists of an anchor point, hardware assemblies, a full body harness and may include a lanyard, restraint lines, or suitable combinations of these.

Platform means a work surface elevated above the surrounding floor or ground.

Positioning device system means a full body harness or positioning harness that is worn by an employee, and is rigged to allow an employee to be supported on an elevated vertical or inclined surface, such as a wall, pole or column and work with both hands free from the body support.

Positioning harness means a body support that meets the requirements specified in ANSI Z359.3-2007 that encircles and closes around the waist and legs with attachment elements appropriate for positioning work.

Qualified person means one who, by possession of a recognized degree, certificate, or professional standing, or who by extensive knowledge, training, and experience, has successfully demonstrated his/her ability to solve or resolve problems related to the subject matter, the work, or the project.

Restraint line means a line from a fixed anchorage or between two anchorages to which an employee is secured in such a way as to prevent the worker from falling to a lower level.

Roof means the exterior surface on the top of a building. This does not include floors or formwork which, because a building has not been completed, temporarily become the top surface of a building.

Roofing work means the hoisting, storage, application, and removal of roofing materials and equipment, including related insulation, sheet metal, and vapor barrier work, but not including the construction of the roof deck.

Rope grab means a fall arrester that is designed to move up or down a lifeline suspended from a fixed overhead or horizontal anchorage point, or lifeline, to which the full body harness is attached. In the event of a fall, the rope grab locks onto the lifeline rope through compression to arrest the fall. The use of a rope grab device is restricted for all restraint applications. See WAC 296-155-24615 (1)(f).

Runway means a passageway for persons, elevated above the surrounding floor or ground level, such as a footwalk along shafting or a walkway between buildings.

Safety line - See lifeline.

Safety monitoring system means a type of fall restraint system in which a competent person whose only job responsibility is to recognize and warn employees of their proximity to fall hazards when working between the warning line and the unprotected sides and edges, including the leading edge of a low pitch roof or other walking/working surface.

Safety net system means a type of fall arrest system, as described in WAC 296-155-24613(2).

Safety watch system means a fall protection system as described in WAC 296-155-24615(6), in which a competent person monitors one worker who is engaged in repair work or servicing equipment on low pitch roofs only.

Self-rescue device means a piece of equipment designed to allow a person, who is suspended in a personal fall arrest system, to independently rescue themselves after the fall by moving the device up or down until they reach a surface and are no longer suspended.

Self-retracting lifeline means a deceleration device which contains a wound line which may be slowly extracted

from, or retracted onto, the device under slight tension during normal employee movement, and which after onset of a fall, automatically locks the drum and arrests the fall.

Shock absorbing lanyard means a flexible line of webbing, cable, or rope used to secure a full body harness to a lifeline or anchorage point that has an integral shock absorber.

Snap hook - See "locking snap hook."

Standard guardrail system means a type of fall restraint system that is a vertical barrier consisting of a top rail and mid rail, and toe board when used as falling object protection for persons who may work or pass below, that is erected along all open sides or edges of a walking/working surface, a floor opening, a floor hole, wall opening, ramp, platform, or runway.

Standard strength and construction means any construction of railings, covers, or other guards that meets the requirements of this part.

Static line - See horizontal lifeline.

Steep pitched roof means a roof having a slope greater than four in twelve.

Toe board means a vertical barrier at floor level erected along all open sides or edges of a floor opening, platform, runway, ramp, or other walking/working surface to prevent materials, tools, or debris from falling onto persons passing through or working in the area below.

Unprotected sides and edges means any open side or edge of a floor, roof, balcony/deck, platform, ramp, runway, or walking/working surface where there is no standard guardrail system, or parapet wall of solid strength and construction that is at least thirty-nine inches in vertical height.

Walking/working surface means any area including, but not limited to, floors, a roof surface, bridge, the ground, and any other surfaces whose dimensions are forty-five inches or more in all directions, through which workers can pass or conduct work. A walking/working surface does not include vehicles or rolling stock on which employees must be located in order to perform their job duties.

Wall opening means an opening at least thirty inches high and eighteen inches wide, in any wall or partition, through which persons may fall, such as an opening for a window, a yard arm doorway or chute opening.

Warning line system means a barrier erected on a walking and working surface or a low pitch roof (four in twelve or less), to warn employees that they are approaching an unprotected fall hazard(s).

[Statutory Authority: RCW 49.17.010, 49.17.040, 49.17.050, 49.17.060 and 29 C.F.R. 1926, Subpart M, Fall Protection. WSR 13-04-073, § 296-155-24603, filed 2/4/13, effective 4/1/13.]

WAC 296-155-24605 General requirements. (1) The employer shall ensure that all surfaces on which employees will be working or walking on are structurally sound and will support them safely prior to allowing employees to work or walk on them.

(2) Inspection criteria.

(a) All components (including hardware, lanyards, and positioning harnesses or full body harnesses depending on which system is used) of personal fall arrest systems, personal fall restraint systems and positioning device systems shall be inspected prior to each use according to manufacturer's specifications for mildew, wear, damage, and other deterioration. Defective components shall be removed from service if their function or strength has been adversely affected.

(b) Safety nets shall be inspected at least once a week according to manufacturer's specifications for wear, damage, and other deterioration. Safety nets shall also be inspected after any occurrence which could affect the integrity of the safety net system. Defective components shall be removed from service. Defective nets shall not be used.

(3) Personal fall arrest systems, personal fall restraint system, positioning device systems, and their components shall be used only for employee protection and not to hoist materials.

(4) Exemptions. Employees are exempt from WAC 296-155-24609 and 296-155-24611 only under the following conditions:

(a) During initial installation of the fall protection anchor (prior to engaging in any work activity), or the disassembly of the fall protection anchor after the work has been completed.

(b) An employee directly involved with inspecting or estimating roof-level conditions only on low pitched roofs prior to the actual start of construction work or after all construction work has been completed.

Examples of activities the department recognizes as inspecting or estimating include:

• Measuring a roof to determine the amount of materials needed for a project.

• Inspecting the roof for damage without removing equipment or components.

• Assessing the roof to determine what method of fall protection will be provided to employees.

Examples the department does not recognize as inspecting or estimating under this exemption include:

• Delivering, staging or storing materials on a roof.

• Persons estimating or inspecting on roofs that would be considered a "hazardous slope" by definition.

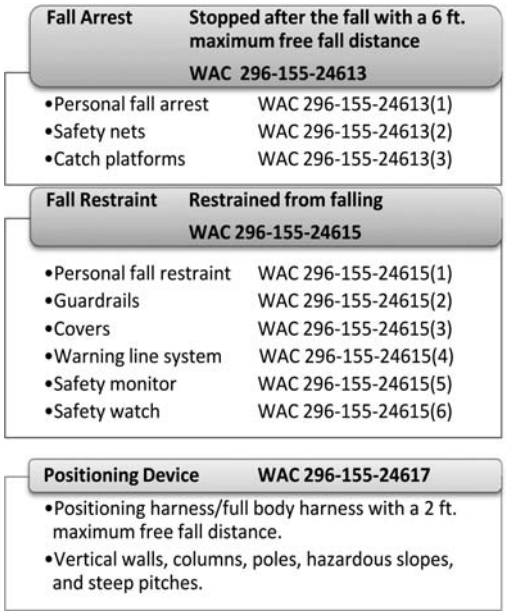

Examples of what personal fall arrest, personal fall restraint and positioning device systems look like:

Fall Arrest

Fall Restraint

Positioning

[Statutory Authority: RCW 49.17.010, 49.17.040, 49.17.050, 49.17.060 and 29 C.F.R. 1926, Subpart M, Fall Protection. WSR 13-04-073, § 296-155-24605, filed 2/4/13, effective 4/1/13.]

WAC 296-155-24607 Fall protection required regardless of height. (1) Regardless of height, open sided floors, walkways, platforms, or runways above or adjacent to dangerous equipment, such as dip tanks and material handling equipment, and similar hazards shall be guarded with a standard guardrail system.

(2) Floor holes or floor openings, into which persons can accidentally walk, shall be guarded by either a standard railing with standard toe board on all exposed sides, or a cover of standard strength and construction that is secured against accidental displacement. While the cover is not in place, the floor hole opening shall be protected by a standard railing.

Note: Requirements for when guarding floor openings at heights of four feet or more are located in WAC 296-155-24609(4).

(3) Regardless of height employees shall be protected from falling into or onto impalement hazards, such as: Reinforcing steel (rebar), or exposed steel or wood stakes used to set forms.

[Statutory Authority: RCW 49.17.010, 49.17.040, 49.17.050, 49.17.060 and 29 C.F.R. 1926, Subpart M, Fall Protection. WSR 13-04-073, § 296-155-24607, filed 2/4/13, effective 4/1/13.]

WAC 296-155-24609 Fall protection required at four feet or more. (1) The employer shall ensure that the appropriate fall protection system is provided, installed, and implemented according to the requirements in this part when employees are exposed to fall hazards of four feet or more to the ground or lower level when on a walking/working surface.

(2) Guarding of walking/working surfaces with unprotected sides and edges. Every open sided walking/working surface or platform four feet or more above adjacent floor or ground level shall be guarded by one of the following fall protection systems.

(a) A standard guardrail system, or the equivalent, as specified in WAC 296-155-24615(2), on all open sides, except where there is entrance to a ramp, stairway, or fixed ladder. The railing shall be provided with a standard toe board wherever, beneath the open sides, persons can pass, there is moving machinery, or there is equipment with which falling materials could create a hazard.

(i) When employees are using stilts, the height of the top rail or equivalent member of the standard guardrail system must be increased (or additional railings may be added) an amount equal to the height of the stilts while maintaining the strength specifications of the guardrail system.

(ii) Where employees are working on platforms above the protection of the guardrail system, the employer must either increase the height of the guardrail system as specified in (a)(i) of this subsection, or select and implement another fall protection system as specified in (b), (c), (d), (e), or (f) of this subsection.

(iii) When guardrails must be temporarily removed to perform a specific task, the area shall be constantly attended by a monitor until the guardrail is replaced. The only duty the monitor shall perform is to warn persons entering the area of the fall hazard.

(b) A fall restraint system;

(c) A personal fall arrest system;

(d) A safety net system;

(e) A catch platform; and

(f) A warning line.

(3) Guarding of ramps, runways, and inclined walkways.

(a) Ramps, runways, and inclined walkways that are four feet or more above the ground or lower level shall be equipped with a standard guardrail system or the equivalent, as specified in WAC 296-155-24615(2), along each open side. Wherever tools, machine parts, or materials are likely to be used on the runway, a toe board shall also be installed on each open side to protect persons working or passing below.

(b) Runways used exclusively for special purposes may have the railing on one side omitted where operating conditions necessitate such omission, provided the falling hazard is minimized by using a runway not less than eighteen inches wide.

Note: See WAC 296-155-24619(1) for other specific criteria for ramps, runways, and inclined walkways.

(4) Guarding of floor openings.

(a) Floor openings shall be guarded by one of the following fall restraint systems.

(i) A standard guardrail system, or the equivalent, as specified in WAC 296-155-24615(2), on all open sides, except where there is entrance to a ramp, stairway, or fixed ladder. The railing shall be provided with a standard toe board wherever, beneath the open sides, persons can pass, or there is moving machinery, or there is equipment with which falling materials could create a hazard.

(ii) A cover, as specified in WAC 296-155-24615(3).

(iii) A warning line system erected at least fifteen feet from all unprotected sides or edges of the floor opening and meets the requirements of WAC 296-155-24615(4).

(iv) If it becomes necessary to remove the cover, the guardrail system, or the warning line system, then an employee shall remain at the opening until the cover, guardrail system, or warning line system is replaced. The only duty the employee shall perform is to prevent exposure to the fall hazard by warning persons entering the area of the fall hazard.

(b) Ladderway floor openings or platforms shall be guarded by standard guardrail system with standard toe boards on all exposed sides, except at entrance to opening, with the passage through the railing either provided with a swinging gate or so offset that a person cannot walk directly into the opening.

(c) Hatchways and chute floor openings shall be guarded by one of the following:

(i) Hinged covers of standard strength and construction and a standard guardrail system with only one exposed side. When the opening is not in use, the cover shall be closed or the exposed side shall be guarded at both top and intermediate positions by removable standard guardrail systems.

(ii) A removable standard guardrail system with toe board on not more than two sides of the opening and fixed standard guardrail system with toe boards on all other exposed sides. The removable railing shall be kept in place when the opening is not in use and shall be hinged or otherwise mounted so as to be conveniently replaceable.

(d) Wherever there is a danger of falling through an unprotected skylight opening, or the skylight has been installed and is not capable of sustaining the weight of a two hundred pound person with a safety factor of four, standard guardrails shall be provided on all exposed sides in accordance with WAC 296-155-24615(2) or the skylight shall be covered in accordance with WAC 296-155-24615(3). Personal fall arrest equipment may be used as an equivalent means of fall protection when worn by all employees exposed to the fall hazard.

(e) Pits and trap door floor openings shall be guarded by floor opening covers of standard strength and construction. While the cover is not in place, the pit or trap openings shall be protected on all exposed sides by removable standard guardrail system.

(f) Manhole floor openings shall be guarded by standard covers which need not be hinged in place. While the cover is not in place, the manhole opening shall be protected by standard guardrail system.

(5) Guarding of wall openings.

(a) Wall openings, from which there is a fall hazard of four feet or more, and the bottom of the opening is less than thirty-nine inches above the working surface, shall be guarded as follows:

(i) When the height and placement of the opening in relation to the working surface is such that either a standard rail or intermediate rail will effectively reduce the danger of falling, one or both shall be provided;

(ii) The bottom of a wall opening, which is less than four inches above the working surface, regardless of width, shall be protected by a standard toe board or an enclosing screen either of solid construction or as specified in WAC 296-155-24615 (2)(c).

(b) An extension platform, outside a wall opening, onto which materials can be hoisted for handling shall have standard guardrails on all exposed sides or equivalent. One side of an extension platform may have removable railings in order to facilitate handling materials.

(c) When a chute is attached to an opening, the provisions of subsection (5)(c) of this section shall apply, except that a toe board is not required.

(6) Fall protection during form and rebar work. When exposed to a fall height of four feet or more, employees placing or tying reinforcing steel on a vertical face are required to be protected by personal fall arrest systems, safety net systems, or positioning device systems.

(7) Fall protection on steep pitched and low pitched roofs.

(a) Steep pitched roofs. Regardless of the work activity, employers shall ensure that employees exposed to fall hazards of four feet or more while working on a roof with a pitch greater than four in twelve use one of the following:

(i) Fall restraint system. Safety monitors and warning line systems are prohibited on steep pitched roofs;

(ii) Fall arrest system; or

(iii) Positioning device system.

(b) Low pitched roofs. Employers shall ensure that employees exposed to fall hazards of four feet or more while engaged in work, other than roofing work or leading edge work, on low pitched roofs use one of the following:

(i) Fall restraint system;

(ii) Fall arrest system;

(iii) Positioning device system;

(iv) Safety monitor and warning line system; or

(v) Safety watch system.

(8) Hazardous slopes. Employees exposed to falls of four feet or more while working on a hazardous slope shall use personal fall restraint systems or positioning device systems.

[Statutory Authority: RCW 49.17.010, 49.17.040, 49.17.050, 49.17.060 and 29 C.F.R. 1926, Subpart M, Fall Protection. WSR 13-04-073, § 296-155-24609, filed 2/4/13, effective 4/1/13.]

WAC 296-155-24611 Fall protection required at ten feet or more. (1) The employer shall ensure that the appropriate fall protection system is provided, installed, and implemented according to the requirements in this part when employees are exposed to fall hazards of ten feet or more to the ground or lower level, while:

(a) Engaged in roofing work on a low pitched roof;

(b) Constructing a leading edge;

Note: Employees not directly involved with constructing the leading edge, or are not performing roofing work must comply with WAC 296-155-24609, Fall protection required at four feet or more.

(c) Working on any surface that does not meet the definition of a walking/working surface not already covered in WAC 296-155-24609;

(d) Engaged in excavation and trenching operations.

(i) Exceptions. Fall protection is not required at excavations when employees are:

(A) Directly involved with the excavation process and on the ground at the top edge of the excavation; or

(B) Working at an excavation site where appropriate sloping of side walls has been implemented as the excavation protective system.

(ii) Fall protection is required for employees standing in or working in the affected area of a trench or excavation exposed to a fall hazard of ten feet or more and:

(A) The employees are not directly involved with the excavation process; or

(B) The employees are on the protective system or any other structure in the excavation.

Note: Persons considered directly involved in the excavation process include:

- Foreman of the crew.
- Signal person.
- Employee hooking on pipe or other materials.
- Grade person.
- State, county, or city inspectors inspecting the excavation or trench.
- An engineer or other professional conducting a quality-assurance inspection.

(2) Fall protection work plan. The employer shall develop and implement a written fall protection work plan including each area of the work place where the employees are assigned and where fall hazards of ten feet or more exist.

(a) The fall protection work plan shall:

(i) Identify all fall hazards in the work area;

(ii) Describe the method of fall arrest or fall restraint to be provided;

(iii) Describe the proper procedures for the assembly, maintenance, inspection, and disassembly of the fall protection system to be used;

(iv) Describe the proper procedures for the handling, storage, and securing of tools and materials;

(v) Describe the method of providing overhead protection for workers who may be in, or pass through the area below the worksite;

(vi) Describe the method for prompt, safe removal of injured workers; and

(vii) Be available on the job site for inspection by the department.

(b) Prior to permitting employees into areas where fall hazards exist the employer shall ensure employees are trained and instructed in the items described in (a)(i) through (vii) of this subsection.

[Statutory Authority: RCW 49.17.010, 49.17.040, 49.17.050, 49.17.060 and 29 C.F.R. 1926, Subpart M, Fall Protection. WSR 13-04-073, § 296-155-24611, filed 2/4/13, effective 4/1/13.]

WAC 296-155-24613 Fall arrest specifications. Fall arrest protection shall conform to the following provisions:

(1) Personal fall arrest system shall consist of:

(a) A full body harness shall be used.

(b) Full body harness systems or components subject to impact loading shall be immediately removed from service and shall not be used again for employee protection unless inspected and determined by a competent person to be undamaged and suitable for reuse.

(c) Anchorages for full body harness systems shall be capable of supporting (per employee):

(i) Three thousand pounds when used in conjunction with:

(A) A self-retracting lifeline that limits the maximum free fall distances to two feet or less; or

(B) A shock absorbing lanyard that restricts the forces on the body to nine hundred pounds or less.

(ii) Five thousand pounds for all other personal fall arrest system applications, or they shall be designed, installed, and used:

(A) As a part of a complete personal fall arrest system which maintains a safety factor of at least two; and

(B) Under the supervision of a qualified person.

(d) When stopping a fall, personal fall arrest systems must:

(i) Be rigged to allow a maximum free fall distance of six feet so an employee will not contact any lower level;

(ii) Limit maximum arresting force on an employee to one thousand eight hundred pounds (8 kN);

(iii) Bring an employee to a complete stop and limit maximum deceleration distance an employee travels to three and one-half feet (1.07 m); and

(iv) Have sufficient strength to withstand twice the potential impact energy of an employee free falling a maximum distance of six feet (1.8 m).

Notes:

- Shock absorbers that meet the requirements of ANSI Z359.1-2007 that are used as a part of a personal fall arrest system in accordance with manufacturer's recommendations and instructions for use and installation will limit the maximum arresting forces on an employee's body to one thousand eight hundred pounds or less.
- To calculate fall clearance distance using a shock absorbing lanyard and D-ring anchorage connector, see WAC 296-155-24624, Appendix B.

(e) All safety lines and lanyards shall be protected against being cut or abraded.

(f) The attachment point of the full body harness shall be located in the center of the wearer's back near shoulder level, or above the wearer's head.

(g) Hardware shall be drop forged, pressed or formed steel, or made of materials equivalent in strength.

(h) Hardware shall have a corrosion resistant finish, and all surfaces and edges shall be smooth to prevent damage to the attached full body harness or lanyard.

(i) When vertical lifelines (droplines) are used, not more than one employee shall be attached to any one lifeline.

Note: The system strength needs in the following items are based on a total combined weight of employee and tools of no more than three hundred and ten pounds. If combined weight is more than three hundred and ten pounds, appropriate allowances must be made or the system will not be in compliance. For more information on system testing see WAC 296-24-88050, Appendix C, Part II.

(j) Vertical lifelines (droplines) shall have a minimum breaking strength of five thousand pounds (22.2 kN), except that self-retracting lifelines and lanyards which automatically limit free fall distance to two feet (.61 m) or less shall have a minimum breaking strength of three thousand pounds (13.3 kN).

(k) Horizontal lifelines shall be designed, installed, and used, under the supervision of a qualified person, as part of a complete personal fall arrest system, which maintains a safety factor of at least two.

(l) Droplines or lifelines used on rock scaling operations, or in areas where the lifeline may be subjected to cutting or abrasion, shall be a minimum of seven-eighths inch wire core manila rope or equivalent. For all other lifeline applications,

a minimum of three-fourths inch manila rope or equivalent, with a minimum breaking strength of five thousand pounds, shall be used.

(m) Lanyards shall have a minimum breaking strength of five thousand pounds (22.2 kN).

(n) All components of full body harness systems whose strength is not otherwise specified in this subsection shall be capable of supporting a minimum fall impact load of five thousand pounds (22.2 kN) applied at the lanyard point of connection.

(o) D-rings and snap hooks shall be proof-tested to a minimum tensile load of three thousand six hundred pounds (16 kN) without cracking, breaking, or taking permanent deformation.

(p) Snap hooks shall be a locking type snap hook designed and used to prevent disengagement of the snap hook by the contact of the snap hook keeper by the connected member.

(q) Unless the snap hook is designed for the following connections, snap hooks shall not be engaged:

(i) Directly to the webbing, rope or wire rope;

(ii) To each other;

(iii) To a D-ring to which another snap hook or other connector is attached;

(iv) To a horizontal lifeline; or

(v) To any object which is incompatibly shaped or dimensioned in relation to the snap hook such that unintentional disengagement could occur by the connected object being able to depress the snap hook keeper and release itself.

(2) Safety net systems. Safety net systems and their use shall comply with the following provisions:

(a) Safety nets shall be installed as close as practicable under the surface on which employees are working, but in no case more than thirty feet (9.1 m) below such level unless specifically approved in writing by the manufacturer. The potential fall area to the net shall be unobstructed.

(b) Safety nets shall extend outward from the outermost projection of the work surface as follows:

Vertical distance from working levels to horizontal plane of net	Minimum required horizontal distance of outer edge of net from the edge of the working surface
Up to 5 feet	8 feet
More than 5 feet up to 10 feet	10 feet
More than 10 feet	13 feet

(c) Safety nets shall be installed with sufficient clearance under them to prevent contact with the surface or structures below when subjected to an impact force equal to the drop test specified in (d) of this subsection.

(d) Safety nets and their installations shall be capable of absorbing an impact force equal to that produced by the drop test.

(i) Except as provided in (d)(ii) of this subsection, safety nets and safety net installations shall be drop-tested at the job site after initial installation and before being used as a fall protection system, whenever relocated, after major repair, and at six-month intervals if left in one place. The drop-test shall consist of a four hundred pound (180 kg) bag of sand 30 ± 2 inches (76 ± 5 cm) in diameter dropped into the net from the highest walking/working surface at which employees are exposed to fall hazards, but not from less than forty-two inches (1.1 m) above that level.

(ii) When the employer can demonstrate that it is unreasonable to perform the drop-test required by (d)(i) of this subsection, the employer (or a designated competent person) shall certify that the net and net installation is in compliance with (c) and (d)(i) of this subsection by preparing a certification record prior to the net being used as a fall protection system. The certification record must include an identification of the net and net installation for which the certification record is being prepared; the date that it was determined that the identified net and net installation were in compliance with (c) of this subsection and the signature of the person making the determination and certification. The most recent certification record for each net and net installation shall be available at the job site for inspection.

(e) Materials, scrap pieces, equipment, and tools which have fallen into the safety net shall be removed as soon as possible from the net and at least before the next work shift.

(f) The maximum size of each safety net mesh opening shall not exceed thirty-six square inches (230 cm^2) nor be longer than six inches (15 cm) on any side, and the opening, measured center-to-center of mesh ropes or webbing, shall not be longer than six inches (15 cm). All mesh crossings shall be secured to prevent enlargement of the mesh opening.

(g) Each safety net (or section of it) shall have a border rope or webbing with a minimum breaking strength of five thousand pounds (22.2 kN).

(h) Connections between safety net panels shall be as strong as integral net components and shall be spaced not more than six inches (15 cm) apart.

(3) Catch platforms.

(a) A catch platform shall be installed within four vertical feet of the work area.

(b) The catch platform's width shall be a minimum of forty-five inches wide and shall be equipped with standard guardrails and toe boards on all open sides.

[Statutory Authority: RCW 49.17.010, 49.17.040, 49.17.050, 49.17.060 and 29 C.F.R. 1926, Subpart M, Fall Protection. WSR 13-04-073, § 296-155-24613, filed 2/4/13, effective 4/1/13.]

WAC 296-155-24615 Fall restraint specifications. Fall restraint protection shall conform to the following provisions:

(1) Personal fall restraint systems shall be rigged to allow the movement of employees only as far as the unprotected sides and edges of the walking/working surface, and shall consist of:

(a) A full body harness shall be used.

(b) The full body harness must be attached to securely rigged restraint lines.

(c) All hardware assemblies for full body harness shall be capable of withstanding a tension loading of four thousand pounds without cracking, breaking, or taking a permanent deformation.

(d) The employer shall ensure component compatibility.

(e) Anchorage points used for fall restraint shall be capable of supporting four times the intended load.

(f) Rope grab devices are prohibited for fall restraint applications unless they are part of a fall restraint system designed specifically for the purpose by the manufacturer, and used in strict accordance with the manufacturer's recommendations and instructions.

(2) Guardrail specifications.

(a) A standard guardrail system shall consist of top rail, intermediate rail, and posts, and shall have a vertical height of thirty-nine to forty-five inches from upper surface of top rail to floor, platform, runway, or ramp level. When conditions warrant, the height of the top edge may exceed the forty-five inch height, provided the guardrail system meets all other criteria of this subsection. The intermediate rail shall be halfway between the top rail and the floor, platform, runway, or ramp. The ends of the rails shall not overhang the terminal posts except where such overhang does not constitute a projection hazard.

(b) Minimum requirements for standard guardrail systems under various types of construction are specified in the following items:

(i) For wood railings, the posts shall be of at least two-inch by four-inch stock spaced not to exceed eight feet; the top rail shall be of at least two-inch by four-inch stock and each length of lumber shall be smooth surfaced throughout the length of the railing. The intermediate rail shall be of at least one-inch by six-inch stock. Other configurations may be used for the top rail when the configuration meets the requirements of (b)(vii) of this subsection.

(ii) For pipe railings, posts and top and intermediate railings shall be at least one and one-half inches nominal OD diameter with posts spaced not more than eight feet on centers. Other configurations may be used for the top rail when the configuration meets the requirements of (b)(vii) of this subsection.

(iii) For structural steel railings, posts and top and intermediate rails shall be of two-inch by two-inch by three-eighths inch angles or other metal shapes of equivalent bending strength, with posts spaced not more than eight feet on centers. Other configurations may be used for the top rail when the configuration meets the requirements of (b)(vii) of this subsection.

(iv) For wire rope railings, the top and intermediate railings shall meet the strength factor and deflection of (b)(v) of this subsection. The top railing shall be flagged at not more than six foot intervals with high-visibility material. Posts shall be spaced not more than eight feet on centers. The rope shall be stretched taut and shall be between thirty-nine and forty-five inches in height at all points. Other configurations may be used for the top rail when the configuration meets the requirements of (b)(vii) of this subsection.

(v) The anchoring of posts and framing of members for railings of all types shall be of such construction that the completed structure shall be capable of withstanding a load of at least two hundred pounds applied in any direction at any point on the top rail. The top rail shall be between thirty-nine and forty-five inches in height at all points when this force is applied.

(vi) Railings receiving heavy stresses from employees trucking or handling materials shall be provided additional strength by the use of heavier stock, closer spacing of posts, bracing, or by other means.

(vii) Other types, sizes, and arrangements of railing construction are acceptable, provided they meet the following conditions:

(A) A smooth surfaced top rail at a height above floor, platform, runway, or ramp level between thirty-nine and forty-five inches;

(B) When the two hundred pound (890 N) load specified in (b)(v) of this subsection is applied in a downward direction, the top edge of the guardrail shall not deflect to a height less than thirty-nine inches (1.0 m) above the walking/working level. Guardrail system components selected and constructed in accordance with this part will be deemed to meet this requirement;

(C) Protection between top rail and floor, platform, runway, ramp, or stair treads, equivalent at least to that afforded by a standard intermediate rail;

(D) Elimination of overhang of rail ends unless such overhang does not constitute a hazard.

(c) Toe board specifications.

(i) A standard toe board shall be a minimum of four inches nominal in vertical height from its top edge to the level of the floor, platform, runway, or ramp. It shall be securely fastened in place with not more than one-quarter inch clearance above floor level. It may be made of any substantial material, either solid, or with openings not over one inch in greatest dimension.

(ii) Where material is piled to such height that a standard toe board does not provide protection, paneling, or screening from floor to intermediate rail or to top rail shall be provided.

(3) Cover specifications.

(a) Floor opening or floor hole covers shall be of any material that meets the following strength requirements:

(i) Conduits, trenches, and manhole covers and their supports, when located in roadways, and vehicular aisles shall be designed to carry a truck rear axle load of at least two times the maximum intended load;

(ii) All floor opening and floor hole covers shall be capable of supporting the maximum potential load but never less than two hundred pounds (with a safety factor of four).

(A) All covers shall be secured when installed so as to prevent accidental displacement by the wind, equipment, or employees.

(B) All covers shall be color coded or they shall be marked with the word "hole" or "cover" to provide warning of the hazard.

(b) Barriers and screens used to cover wall openings shall meet the following requirements:

(i) Barriers shall be of such construction and mounting that, when in place at the opening, the barrier is capable of withstanding a load of at least two hundred pounds applied in any direction (except upward), with a minimum of deflection at any point on the top rail or corresponding member.

(ii) Screens shall be of such construction and mounting that they are capable of withstanding a load of at least two hundred pounds applied horizontally at any point on the near side of the screen. They may be of solid construction of either grill work with openings not more than eight inches long, or of slat work with openings not more than four inches wide with length unrestricted.

(4) Warning line system specifications on pitches four in twelve or less for roofing work, leading edge work, and on

low pitched open sided surfaces for work activities other than roofing work or leading edge work. The employer shall ensure the following:

(a) Warning lines shall be erected around all unprotected sides and edges of the work area.

(i) Warning lines used during roofing work.

(A) When roofing work is taking place or when mechanical equipment is not being used, the warning line shall be erected not less than six feet (1.8 m) from the edge of the roof.

(B) When mechanical equipment is being used, the warning line shall be erected not less than six feet (1.8 m) from the roof edge which is parallel to the direction of mechanical equipment operation, and not less than ten feet (3.1 m) from the roof edge which is perpendicular to the direction of mechanical equipment operation.

(ii) Warning lines erected for leading edge work.

Warning lines shall be erected to separate employees who are engaged in leading edge work (between the forward edge of the warning line and the leading edge), from other work areas on the low pitched surface. The employer shall ensure:

(A) The warning line is erected not less than six feet nor more than twenty-five feet from the leading edge; and

(B) When fall arrest systems as described in WAC 296-155-24613, or fall restraint systems as described in subsections (1) and (2) of this section are not used, a safety monitor system as described in subsection (5) of this section shall be implemented to protect employees engaged in constructing the leading edge who are working between the forward edge of the warning line and the leading edge.

(iii) Warning lines erected on low pitched open sided surfaces for work activities other than roofing work or leading edge work, shall be erected not less than fifteen feet from the unprotected sides or edges of the open sided surface.

(b) The warning line shall consist of a rope, wire, or chain and supporting stanchions erected as follows:

(i) The rope, wire, or chain shall be flagged at not more than six foot (1.8 m) intervals with high visibility material. Highly visible caution or danger tape as described in (b)(iv) of this subsection, does not need to be flagged.

(ii) The rope, wire, or chain shall be rigged and supported in such a way that its lowest point (including sag) is no less than thirty-six inches from the surface and its highest point is no more than forty-five inches from the surface.

(iii) After being erected, with the rope, wire or chain attached, stanchions shall be capable of resisting, without tipping over, a force of at least sixteen pounds (71 N) applied horizontally against the stanchion, thirty inches (0.76 m) above the surface, perpendicular to the warning line, and in the direction of the unprotected sides or edges of the surface.

(iv) The rope, wire, or chain shall have a minimum tensile strength of two hundred pounds (90 k), and after being attached to the stanchions, shall be capable of supporting, without breaking, the loads applied to the stanchions.

Highly visible caution or danger tape may be used in lieu of rope, wire, or chain as long as it is at least three inches wide and three mils thick, and has a tensile strength of at least two hundred pounds.

(v) The line shall be attached at each stanchion in such a way that pulling on one section of the line between stanchions will not result in slack being taken up in adjacent sections before the stanchion tips over.

(c) Access paths shall be erected as follows:

(i) Points of access, materials handling areas, and storage areas shall be connected to the work area by a clear access path formed by two warning lines.

(ii) When the path to a point of access is not in use, a rope, wire, or chain, equal in strength and height to the warning line, shall be placed across the path at the point where the path intersects the warning line erected around the work area.

(5) Safety monitor system specifications.

(a) A safety monitor system may be used in conjunction with a warning line system as a method of fall protection during roofing work on low pitched roofs or leading edge work on low pitched surfaces.

Note: The warning line is not required when performing roofing work on low pitched roofs less than fifty feet wide. For information on determining roof widths, see WAC 296-155-24623, Appendix A, determining roof widths.

(b) When selected, the employer shall ensure that the safety monitor system is addressed in the fall protection work plan, including the name of the safety monitor(s) and the extent of their training in both the safety monitor and warning line systems. The employer shall ensure that the following requirements are met:

(i) The safety monitor system shall not be used when adverse weather conditions create additional hazards.

(ii) Employees working outside of the warning line system, (between the forward edge of the warning line and the unprotected sides or edges of a low pitched surface), shall be readily distinguishable from other members of the crew that are working inside the warning line system by wearing highly visible, distinctive, and uniform apparel.

(iii) Employees must promptly comply with fall hazard warnings from the safety monitor.

(iv) A person acting in the capacity of safety monitor(s) shall be trained in the function of both the safety monitor and warning line systems, and shall:

(A) Be a competent person as defined in WAC 296-155-24603.

(B) Have control authority over the work as it relates to fall protection.

(C) Be instantly distinguishable over members of the work crew.

(D) Perform no other duties while acting as safety monitor.

(E) Be positioned in relation to the workers under their protection, so as to have a clear, unobstructed view and be able to maintain normal voice communication.

(F) Not supervise more than eight exposed workers at one time.

(G) Warn the employee when it appears that the employee is unaware of a fall hazard or is acting in an unsafe manner.

(6) Safety watch system specifications.

(a) When one employee is conducting any repair work or servicing equipment on a roof that has a pitch no greater than four in twelve, employers are allowed to use a safety watch system.

(b) Ensure the safety watch system meets the following requirements:

(i) There can only be two people on the roof while the safety watch system is being used: The one employee acting as the safety watch and the one employee engaged in the repair work or servicing equipment;

(ii) The employee performing the task must comply promptly with fall hazard warnings from the safety watch;

(iii) Mechanical equipment is not used; and

(iv) The safety watch system is not used when weather conditions create additional hazards.

(c) Ensure the employee acting as the safety watch meets all of the following:

(i) Is a competent person as defined in WAC 296-155-24603;

(ii) Has full control over the work as it relates to fall protection;

(iii) Has a clear, unobstructed view of the worker;

(iv) Is able to maintain normal voice communication; and

(v) Performs no other duties while acting as the safety watch.

[Statutory Authority: RCW 49.17.010, 49.17.040, 49.17.050, 49.17.060 and 29 C.F.R. 1926, Subpart M, Fall Protection. WSR 13-04-073, § 296-155-24615, filed 2/4/13, effective 4/1/13.]

WAC 296-155-24617 Positioning device system specifications. Positioning device systems and their use shall conform to the following provisions:

(1) Positioning harnesses or full body harnesses shall be used.

(2) Positioning devices shall be rigged to prevent an employee from a free fall greater than two feet.

(3) Positioning devices shall be secured to an anchorage capable of supporting at least twice the potential impact load of an employee's fall or three thousand pounds (13.3 kN), whichever is greater.

(4) Connectors shall be drop forged, pressed or formed steel, or made of equivalent materials.

(5) Connectors shall have a corrosion-resistant finish, and all surfaces and edges shall be smooth to prevent damage to interfacing parts of this system.

(6) Connecting assemblies shall have a minimum breaking strength of five thousand pounds (22.2 kN).

(7) D-rings and snap hooks shall be proof-tested to a minimum tensile load of three thousand six hundred pounds (16 kN) without cracking, breaking, or taking permanent deformation.

(8) Snap hooks shall be a locking type snap hook designed and used to prevent disengagement of the snap hook by the contact of the snap hook keeper by the connected member.

(9) Unless the snap hook is designed for the following connections, snap hooks shall not be engaged:

(a) Directly to webbing, rope or wire rope;

(b) To each other;

(c) To a D-ring to which another snap hook or other connector is attached;

(d) To a horizontal lifeline; or

(e) To any object which is incompatibly shaped or dimensioned in relation to the snap hook such that unintentional disengagement could occur by the connected object being able to depress the snap hook keeper and release itself.

[Statutory Authority: RCW 49.17.010, 49.17.040, 49.17.050, 49.17.060 and 29 C.F.R. 1926, Subpart M, Fall Protection. WSR 13-04-073, § 296-155-24617, filed 2/4/13, effective 4/1/13.]

WAC 296-155-24619 Other specifications. (1) Ramps, runways and inclined walkways shall:

(a) Be at least eighteen inches wide; and

(b) Not be inclined more than twenty degrees from horizontal and when inclined, they shall be cleated or otherwise treated to prevent a slipping hazard on the walking surface.

Note: See WAC 296-155-24609(3) for guarding ramps, runways, and inclined walkways that are four feet or more above the ground or lower level.

(2) Self-rescue devices. Self-rescue devices are not a fall protection system. Self-rescue devices used to self-rescue after a fall shall meet the following requirements:

(a) Use self-rescue devices according to the manufacturer's instructions; and

(b) Self-rescue devices must be addressed by the fall protection work plan.

(3) Canopy. Canopies, when used as falling object protection, shall be strong enough to prevent collapse and to prevent penetration by any objects which may fall onto the canopy.

(4) Roofing bracket specifications. Roofing brackets are not a fall protection system.

(a) Roofing brackets shall be constructed to fit the pitch of the roof.

(b) In addition to securing brackets using the pointed metal projections, brackets shall also be secured in place by nailing. When it is impractical to nail brackets, rope supports shall be used. When rope supports are used, they shall consist of first grade manila of at least three-quarters inch diameter, or equivalent.

(5) Crawling board and chicken ladder specifications. Crawling boards and chicken ladders are not fall protection systems.

(a) Crawling boards shall be not less than ten inches wide and one inch thick, having cleats one by one and one-half inches.

(i) The cleats shall be equal in length to the width of the board and spaced at equal intervals not to exceed twenty-four inches.

(ii) Nails shall be driven through and clinched on the underside.

(iii) The crawling board shall extend from the ridge pole to the eaves when used in connection with roof construction, repair, or maintenance.

(b) Crawling boards shall be secured to the roof using ridge hooks or other equivalent means.

(6) Roof edge materials handling areas and materials storage specifications.

(a) When guardrails are used at hoisting areas, a minimum of four feet of guardrail shall be erected along each side of the access point through which materials are hoisted.

(b) A chain or gate shall be placed across the opening between the guardrail sections when hoisting operations are not taking place.

(c) When guardrails are used at bitumen pipe outlet, a minimum of four feet of guardrail shall be erected along each side of the pipe.

(d) Mechanical equipment shall be used or stored only in areas where employees are protected using a fall arrest system as described in WAC 296-155-24613, or a fall restraint system as described in WAC 296-155-24615 (1), (2), or (4). Mechanical equipment may not be used or stored where the only protection is provided by the use of a safety monitor.

(e) The hoist shall not be used as an attachment/anchorage point for fall arrest or fall restraint systems.

(f) Materials shall not be stored within six feet of the roof edge unless guardrails are erected at the roof edge. Guardrails shall include a toe board if employees could be working or passing below.

[Statutory Authority: RCW 49.17.010, 49.17.040, 49.17.050, 49.17.060 and 29 C.F.R. 1926, Subpart M, Fall Protection. WSR 13-04-073, § 296-155-24619, filed 2/4/13, effective 4/1/13.]

WAC 296-155-24621 Training. (1) All training required by this part, must be documented and documentation kept on file.

(2) "Retraining." When the employer has reason to believe that any affected employee who has already been trained does not have the understanding and skill required by subsection (1) of this section, the employer shall retrain each such employee. Circumstances where retraining is required include, but are not limited to, situations where:

• Changes in the workplace render previous training obsolete; or

• Changes in the types of fall protection systems or equipment to be used render previous training obsolete; or

• Inadequacies in an affected employee's knowledge or use of fall protection systems or equipment indicate that the employee has not retained the requisite understanding or skill.

[Statutory Authority: RCW 49.17.010, 49.17.040, 49.17.050, 49.17.060 and 29 C.F.R. 1926, Subpart M, Fall Protection. WSR 13-04-073, § 296-155-24621, filed 2/4/13, effective 4/1/13.]

WAC 296-155-24623 Appendix A—Determining roof widths—Nonmandatory guidelines for complying with WAC 296-155-24615. (1) This appendix serves as a guideline to assist employers complying with the requirements of WAC 296-155-24615 which allows the use of a safety monitoring system alone as a means of providing fall protection during the performance of roofing operations on low-sloped roofs fifty feet (15.25 m) or less in width. Each example in the appendix shows a roof plan or plans and indicates where each roof or roof area is to be measured to determine its width. Section views or elevation views are shown where appropriate. Some examples show "correct" and "incorrect" subdivisions of irregularly shaped roofs divided into smaller, regularly shaped areas. In all examples, the dimension selected to be the width of an area is the lesser of the two primary dimensions of the area, as viewed from above. Example A shows a simple rectangular roof. The width is the lesser of the two primary overall dimensions, which is also the case with roofs sloped toward or away from the roof center, as shown in Example B.

(2) Many roofs are not simple rectangles. Such roofs may be broken down into subareas as shown in Example C. The process of dividing a roof area can produce many different configurations. Example C gives the general rule of using dividing lines of minimum length to minimize the size and number of the areas which are potentially less than fifty feet (15.25 m) wide. The intent is to minimize the number of roof areas where safety monitoring systems alone are sufficient protection.

(3) Roofs which are comprised of several separate, noncontiguous roof areas, as in Example D, may be considered as a series of individual roofs. Some roofs have penthouses, additional floors, courtyard openings, or similar architectural features; Example E shows how the rule for dividing roofs into subareas is applied to such configurations. Irregular, nonrectangular roofs must be considered on an individual basis, as shown in Example F.

Example A
Rectangular Shaped Roof

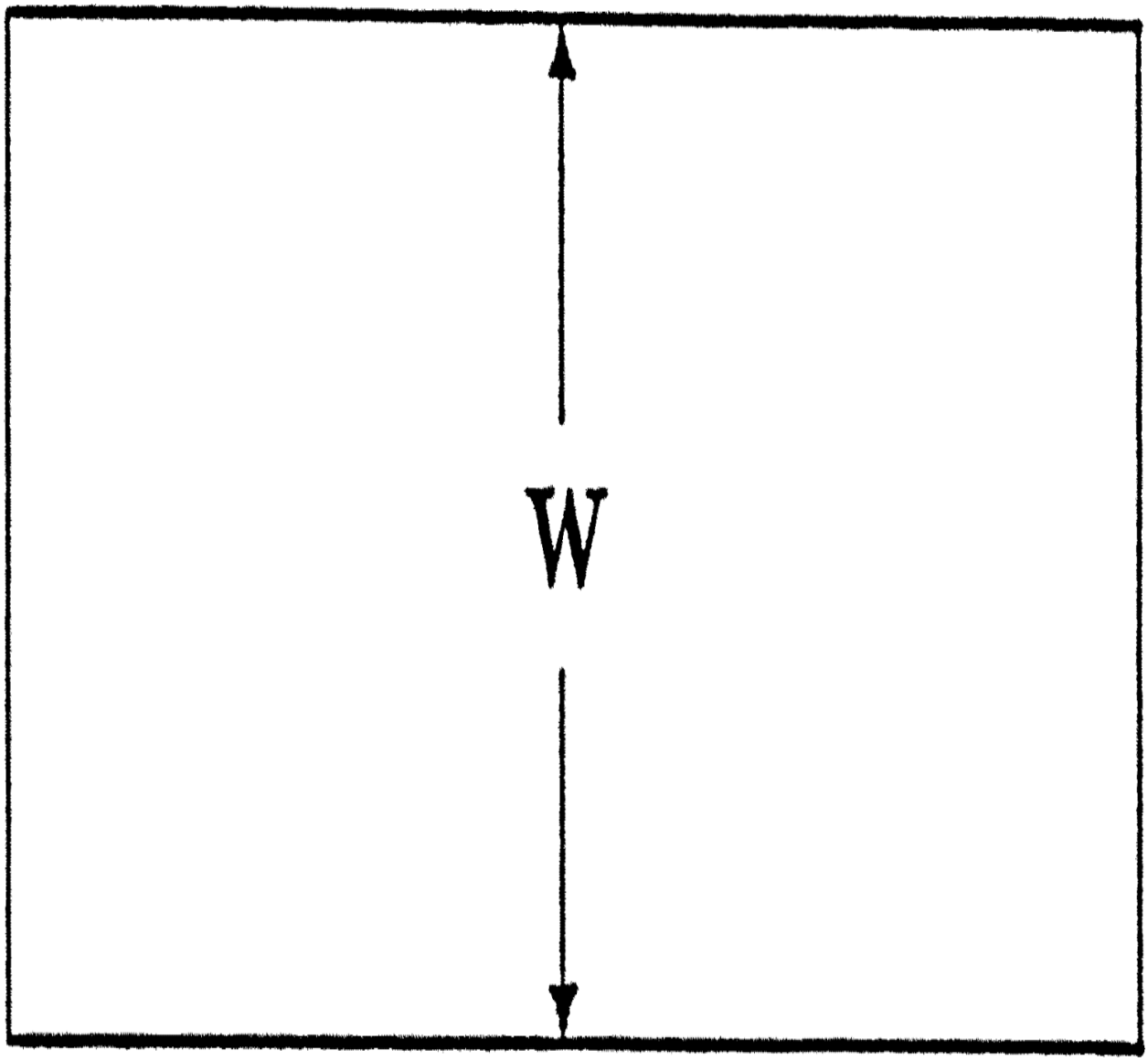

PLAN VIEW

Example B
Sloped Rectangular Shaped Roofs

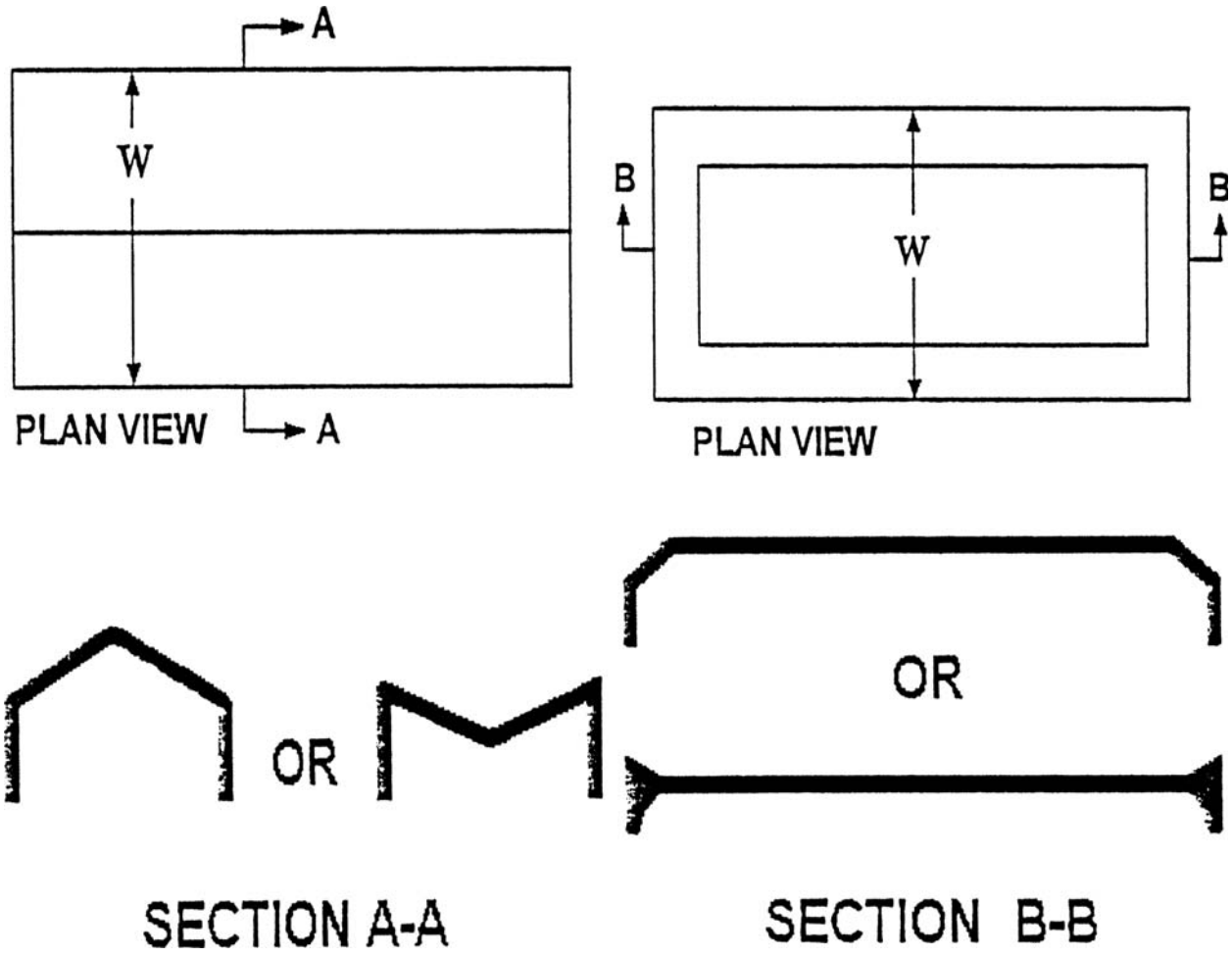

Example C

Irregularly Shaped Roofs With Rectangular Shaped Sections

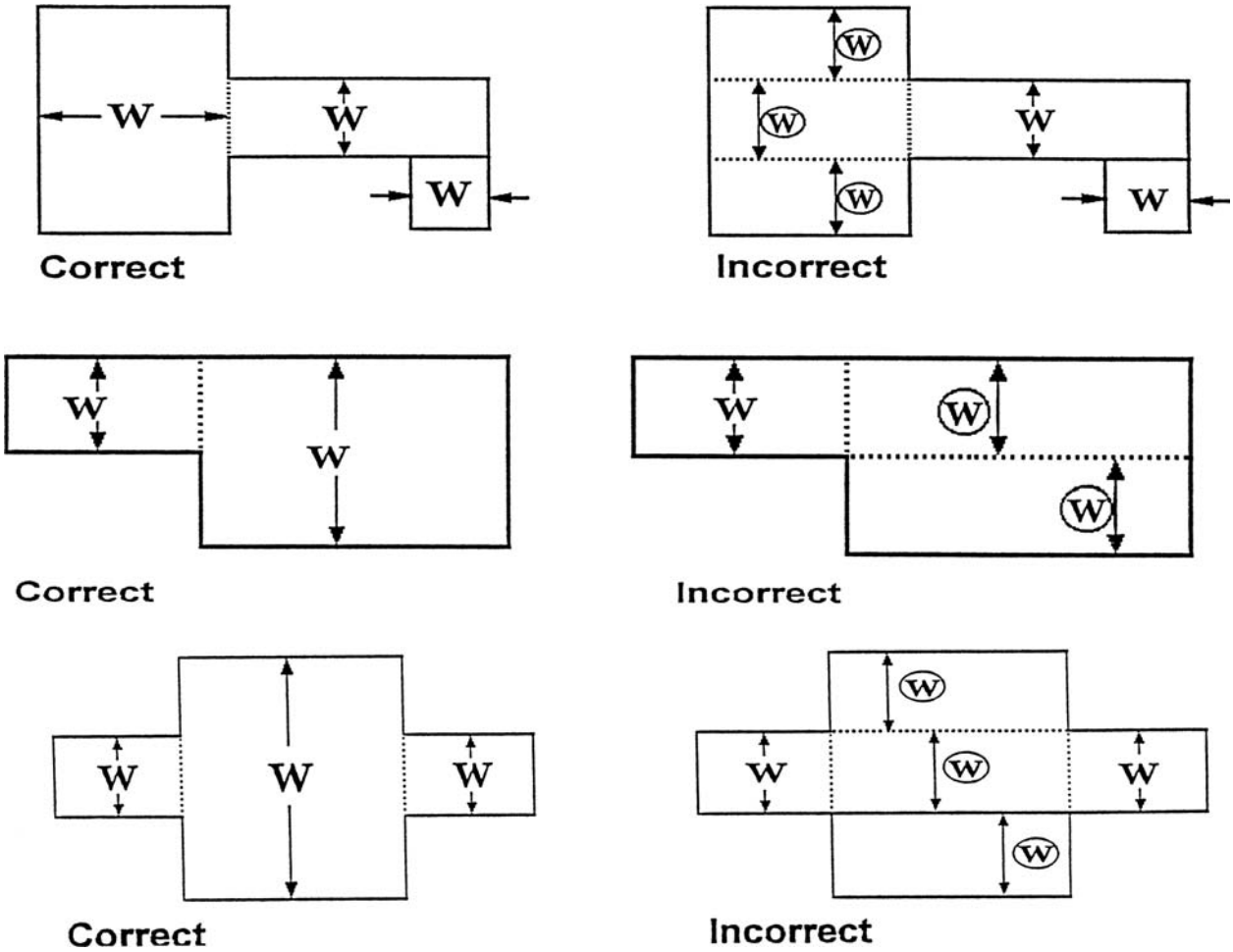

Such roofs are to be divided into subareas by using dividing lines of minimum length to minimize the size and number of the areas which are potentially less than or equal to fifty feet (15.25 m) in width, in order to limit the size of roof areas where the safety monitoring system alone can be used (WAC 296-155-24615 (2)(b)). Dotted lines are used in the examples to show the location of dividing lines.

Ⓦ denotes incorrect measurements of width.

Example D
Separate, Noncontiguous Roof Areas

1.

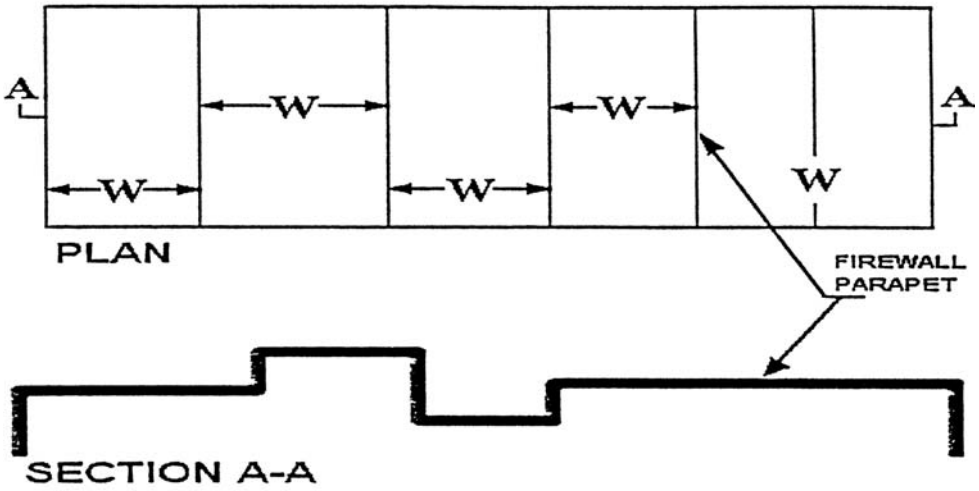

2.

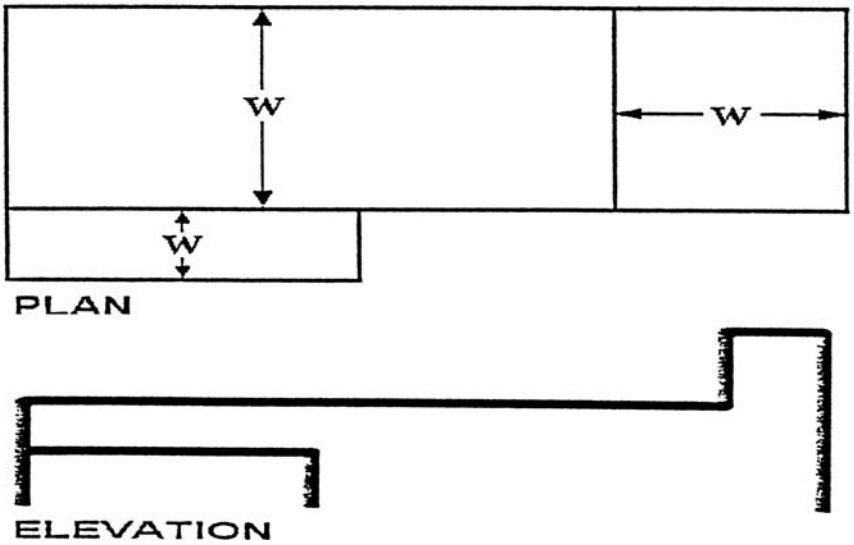

Example E

Roofs with Penthouses, Open Courtyards, Additional Floors, etc.

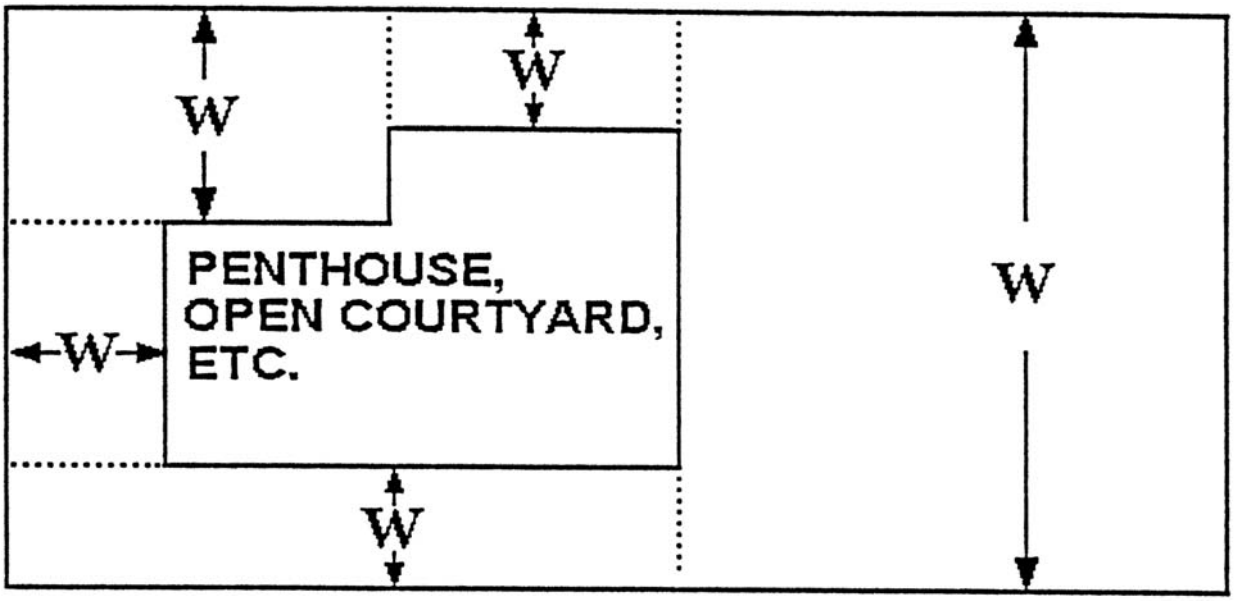

CORRECT

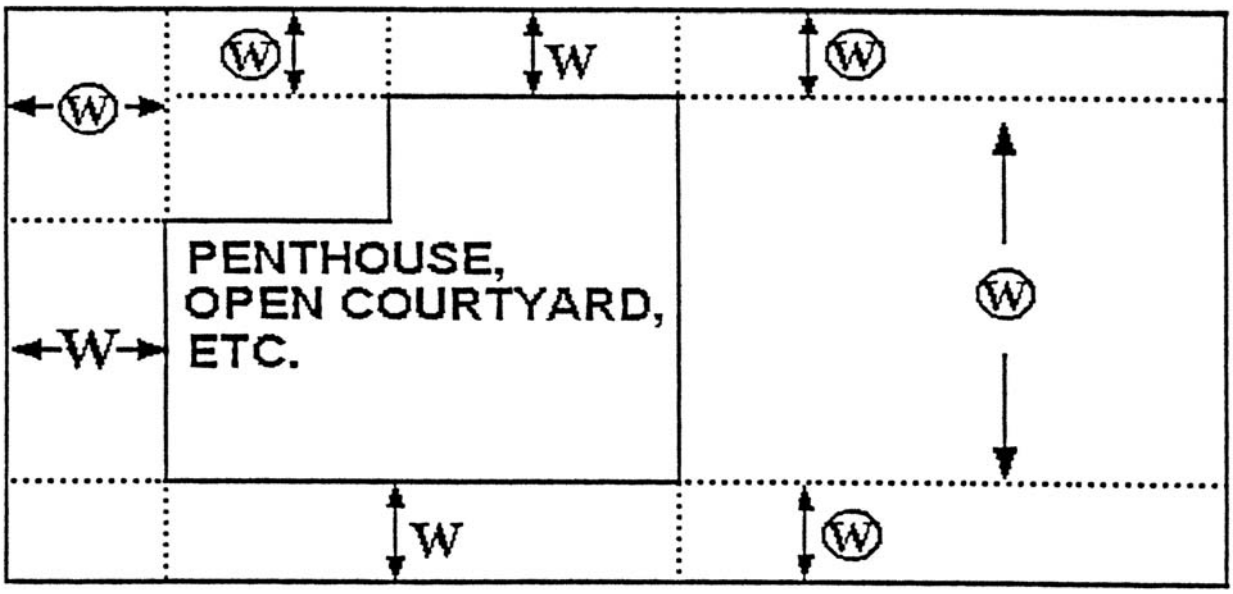

INCORRECT

Such roofs are to be divided into subareas by using dividing lines of minimum length to minimize the size and number of the areas which are potentially less than or equal to fifty feet (15.25 m) in width in order to limit the size of roof areas where the safety monitoring system alone can be used. Dotted lines are used in the examples to show the location of dividing lines.

Ⓦ denotes incorrect measurements of width.

Example F
Irregular, Nonrectangular Shaped Roofs

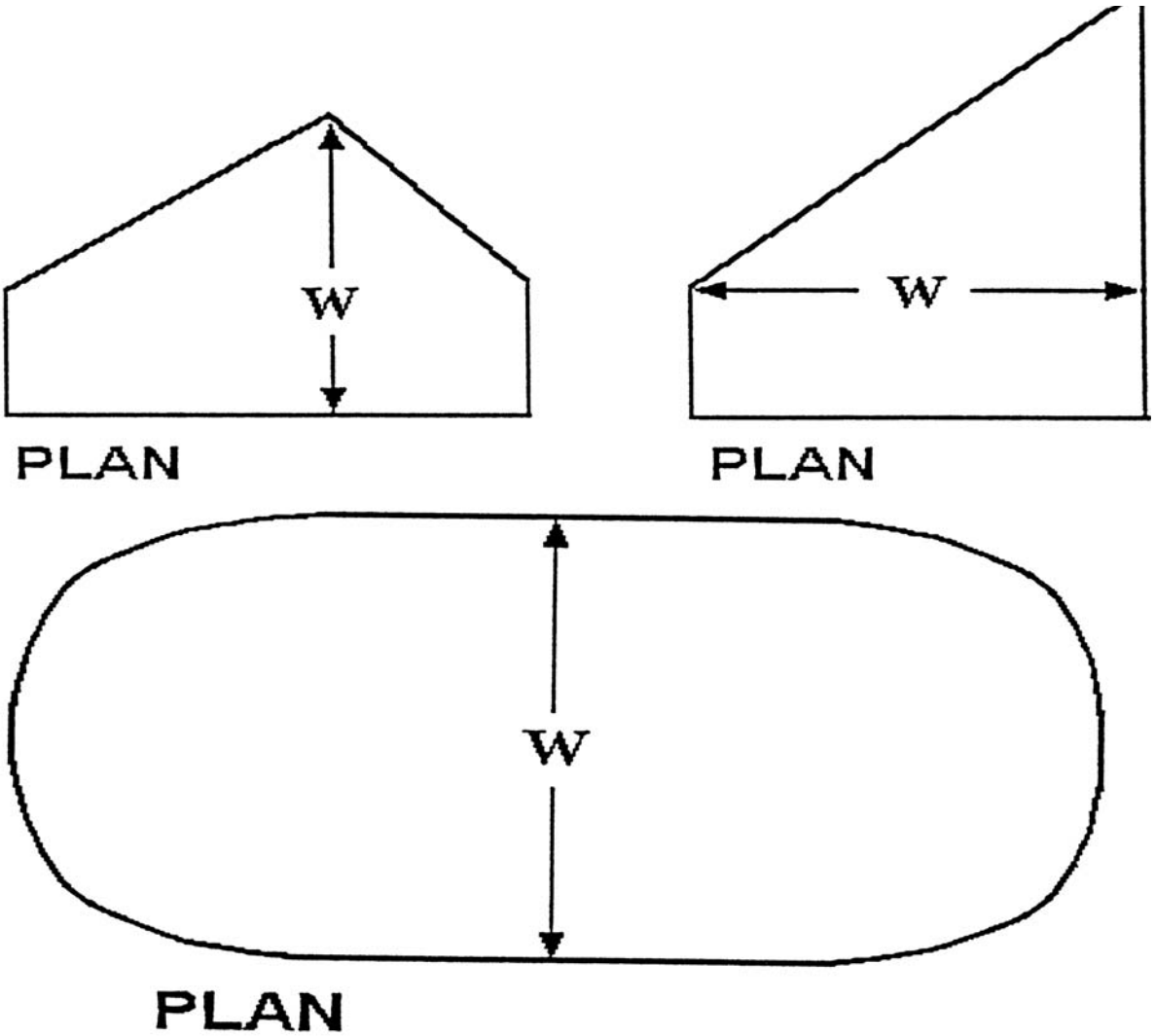

[Statutory Authority: RCW 49.17.010, 49.17.040, 49.17.050, 49.17.060 and 29 C.F.R. 1926, Subpart M, Fall Protection. WSR 13-04-073, § 296-155-24623, filed 2/4/13, effective 4/1/13.]

WAC 296-155-24624 Appendix B—Calculating fall clearance distance using a shock-absorbing lanyard and D-ring anchorage connector—Nonmandatory guidelines for complying with WAC 296-155-24613 (1)(d). Do the following to calculate the fall clearance distance using a shock-absorbing lanyard and D-ring anchorage connector:

• First, add the length of the shock-absorbing lanyard (six feet) to the maximum elongation of the shock absorber during deceleration (three and one-half feet) to the average height of a worker (six feet).

• Then, add a safety factor of three feet to allow for the possibility of an improperly fit full body harness, a taller than average worker and/or a miscalculation of distance.

• The suggested safe fall clearance distance for this example is eighteen and one-half feet.

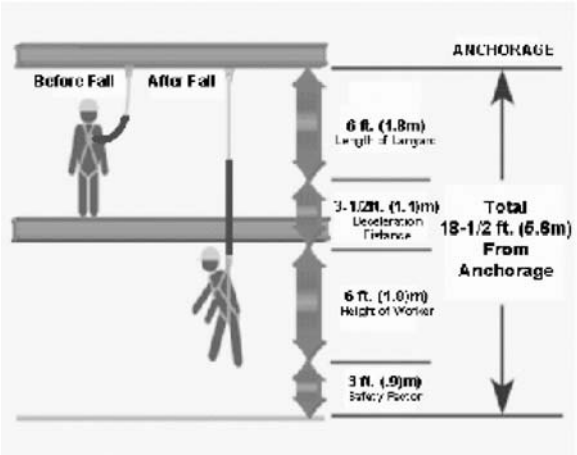

[Statutory Authority: RCW 49.17.010, 49.17.040, 49.17.050, 49.17.060 and 29 C.F.R. 1926, Subpart M, Fall Protection. WSR 13-04-073, § 296-155-24624, filed 2/4/13, effective 4/1/13.]

PART D

FIRE PROTECTION AND PREVENTION

WAC 296-155-250 Definitions applicable to this part. (1) "Approved" for the purpose of this part, means equipment that has been listed or approved by a nationally recognized testing laboratory such as Factory Mutual Engineering Corp., or Underwriters' Laboratories, Inc., federal agencies such as United States Mine Safety and Health Administration or United States Coast Guard, which issue approvals for such equipment, or the department of labor and industries.

(2) "Closed container" means a container so sealed by means of a lid or other device that neither liquid nor vapor will escape from it at ordinary temperatures.

(3) "Combustion" means any chemical process that involves oxidation sufficient to produce light or heat.

(4) "Fire brigade" means an organized group of employees that are knowledgeable, trained, and skilled in the safe evacuation of employees during emergency situations and in assisting in firefighting operations.

(5) "Fire resistance" means so resistant to fire that, for specified time and under conditions of a standard heat intensity, it will not fail structurally and will not permit the side away from the fire to become hotter than a specified temperature. For purposes of this part, fire resistance shall be determined by the Standard Methods of Fire Tests of Building Construction and Materials, NFPA 251-72.

(6) "Flammable" means capable of being easily ignited, burning intensely or having a rapid rate of flame spread.

(7) "Flammable liquid" means any liquid having a flashpoint at or below 199.4°F (93°C). Flammable liquids are divided into four categories as follows:

(a) Category 1 shall include liquids having flashpoints below 73.4°F (23°C) and having a boiling point at or below 95°F (35°C).

(b) Category 2 shall include liquids having flashpoints below 73.4°F (23°C) and having a boiling point above 95°F (35°C).

(c) Category 3 shall include liquids having flashpoints at or above 73.4°F (23°C) and at or below 140°F (60°C). When a Category 3 liquid with a flashpoint at or above 100°F (37.8°C) is heated for use to within 30°F (16.7°C) of its flashpoint, it shall be handled in accordance with the requirements for a Category 3 liquid with a flashpoint below 100°F (37.8°C).

(d) Category 4 shall include liquids having flashpoints above 140°F (60°C) and at or below 199.4°F (93°C). When a Category 4 flammable liquid is heated for use to within 30°F (16.7°C) of its flashpoint, it shall be handled in accordance with the requirements for a Category 3 liquid with a flashpoint at or above 100°F (37.8°C).

(e) When liquid with a flashpoint greater than 199.4°F (93°C) is heated for use to within 30°F (16.7°C) of its flashpoint, it shall be handled in accordance with the requirements for a Category 4 flammable liquid.

(8) "Flashpoint" means the minimum temperature at which a liquid gives off vapor within a test vessel in sufficient concentration to form an ignitable mixture with air near the surface of the liquid, and shall be determined as follows:

(a) The flashpoint of liquids having a viscosity less than 45 Saybolt Universal Second(s) at 100°F (37.8°C) and a flashpoint below 175°F (79.4°C) shall be determined in accordance with the Standard Method of Test for Flash Point by the Tag Closed Tester, ASTM D-56-69, or an equivalent method as defined by WAC 296-901-14024, Appendix B-Physical hazard criteria.

(b) The flashpoints of liquids having a viscosity of 45 Saybolt Universal Second(s) or more at 175°F (79.4°C) or higher shall be determined in accordance with the Standard Method of Test for Flash Point by the Pensky Martens Closed Tester, ASTM D-93-69, or an equivalent method as defined by WAC 296-901-14024, Appendix B-Physical hazard criteria.

(9) "Liquified petroleum gases" "LPG" and "LP Gas" mean and include any material which is composed predominantly of any of the following hydrocarbons, or mixtures of them, such as propane, propylene, butane (normal butane or isobutane), and butylenes.

(10) "Portable tank" means a closed container having a liquid capacity more than 60 U.S. gallons, and not intended for fixed installation.

(11) "Safety can" means an approved closed container, of not more than 5 gallons capacity, having a spring-closing lid and spout cover and so designed that it will safely relieve internal pressure when subjected to fire exposure.

(12) "Salamander" means a portable heating device, solid or liquid fueled, which is not vented to the outdoor atmosphere.

(13) "Vapor pressure" means the pressure, measured in pounds per square inch (absolute), exerted by a volatile liquid as determined by the "Standard Method of Test for Vapor Pressure of Petroleum Products (Reid Method)," (ASTM D-323-68).

[Statutory Authority: RCW 49.17.010, 49.17.040, 49.17.050, 49.17.060 and 29 C.F.R. 1910 Subpart Z. WSR 14-07-086, § 296-155-250, filed 3/18/14, effective 5/1/14. Statutory Authority: RCW 49.17.040 and 49.17.050. WSR 86-03-074 (Order 86-14), § 296-155-250, filed 1/21/86; Order 74-26, § 296-155-250, filed 5/7/74, effective 6/6/74.]

WAC 296-155-260 Fire protection. (1) General requirements.

(a) The employer shall be responsible for development of a fire protection program to be followed throughout all phases of construction and demolition work, and the employer shall provide for firefighting equipment as specified in this part. As fire hazards occur, there shall be no delay in providing necessary equipment.

(b) Access to all available firefighting equipment shall be maintained at all times.

(c) All firefighting equipment, provided by the employer, shall be conspicuously located.

(d) All firefighting equipment shall be periodically inspected by a competent person, and maintained in operating condition. Defective equipment shall be immediately replaced.

(e) As warranted by the project, the employer shall provide a trained and equipped firefighting organization (fire brigade) to assure adequate protection to life.

(2) Water supply.

(a) A temporary or permanent water supply, of sufficient volume, duration, and pressure, required to properly operate firefighting equipment shall be made available as soon as combustible materials accumulate.

(b) Where underground water mains are to be provided, they shall be installed, completed, and made available for use as soon as practicable.

(3) Portable firefighting equipment.

(a) A fire extinguisher, rated not less than 2A, shall be provided for each 3,000 square feet of a combustible building area, or major fraction thereof. Travel distance from any point of the protected area to the nearest fire extinguisher shall not exceed a horizontal distance of 100 feet.

Note: One 55-gallon open drum of water with two fire pails may be substituted for a fire extinguisher having a 2A rating.

(b) A 1/2-inch diameter garden-type hose line, not to exceed 100 feet in length and equipped with a nozzle, may be substituted for a 2A-rated fire extinguisher, provided it is capable of discharging a minimum of 5 gallons per minute with a minimum hose stream range of 30 feet horizontally. The garden-type hose lines shall be mounted on conventional racks or reels. The number and location of hose racks or reels shall be such that at least one hose stream can be applied to all points in the area.

(c) One or more fire extinguishers, rated not less than 2A, shall be provided on each floor. In multistory buildings, where combustibles are present, at least one fire extinguisher shall be located adjacent to a stairway.

(d) Extinguishers and water drums, subject to freezing, shall be protected from freezing.

(e) A fire extinguisher, rated not less than 10B, shall be provided within 50 feet of wherever more than 5 gallons of flammable liquids or 5 pounds of flammable gas are being used on the jobsite. This requirement does not apply to the integral fuel tanks of motor vehicles.

(f) Carbon tetrachloride and other toxic vaporizing liquid fire extinguishers are prohibited.

(g) Portable fire extinguishers shall be inspected periodically and maintained in accordance with Maintenance and Use of Portable Fire Extinguishers, NFPA No. 10A-1981 and WAC 296-800-300.

(h) Fire extinguishers which have been listed or approved by a nationally recognized testing laboratory, shall be used to meet the requirements of this part. (See Table D-1)

Note: For additional requirements relating to portable fire extinguishers see WAC 296-800-300.

	WATER TYPE				FOAM	CARBON DIOXIDE	DRY CHEMICAL			
							SODIUM OR POTASSIUM BICARBONATE		MULTI-PURPOSE ABC	
	STORED PRESSURE	CARTRIDGE OPERATED	WATER PUMP TANK	SODA ACID	FOAM	CO_2	CARTRIDGE OPERATED	STORED PRESSURE	STORED PRESSURE	CARTRIDGE OPERATED
CLASS A FIRES WOOD, PAPER, TRASH HAVING GLOWING EMBERS (A)	YES	YES	YES	YES	YES	NO (BUT WILL CONTROL FLAMES SURFACE FIRES)	NO (BUT WILL CONTROL SMALL SURFACE FIRES)	NO (BUT WILL CONTROL SMALL SURFACE FIRES)	YES	YES
CLASS B FIRES FLAMMABLE LIQUIDS, GASOLINE, OIL, PAINTS, GREASE, ETC. (B)	NO	NO	NO	NO	YES	YES	YES	YES	YES	YES
CLASS C FIRES ELECTRICAL EQUIPMENT (C)	NO	NO	NO	NO	NO	YES	YES	YES	YES	YES
CLASS D FIRES COMBUSTIBLE METALS (METAL)	SPECIAL EXTINGUISHING AGENTS APPROVED BY RECOGNIZED TESTING LABORATORIES									
METHODS OF OPERATION	PULL PIN - SQUEEZE LEVER	TURN UPSIDE DOWN AND PUMP	PUMP HANDLE	TURN UPSIDE DOWN	TURN UPSIDE DOWN	PULL PIN SQUEEZE LEVER	REMOVE CARTRIDGE SQUEEZE LEVER	PULL PIN SQUEEZE HANDLE	PULL PIN SQUEEZE HANDLE	REMOVE CARTRIDGE SQUEEZE LEVER
RANGE	30' - 40'	30' - 40'	30' - 40'	30' - 40'	30' - 40'	3' - 8'	5' - 20'	5' - 20'	5' - 20'	5' - 20'
MAINTENANCE	CHECK AIR PRESSURE GAUGE MONTHLY	WEIGH GAS CARTRIDGE AND WATER IF REQUIRED ANNUALLY	DISCHARGE AND FILL WITH WATER ANNUALLY	DISCHARGE ANNUALLY RECHARGE	DISCHARGE ANNUALLY RECHARGE	WEIGH SEMI ANNUALLY	WEIGH GAS CARTRIDGE CHECK CONDITION OF DRY CHEMICAL ANNUALLY	CHECK PRESSURE GAUGE AND CONDITION OF DRY CHEMICAL ANNUALLY	CHECK PRESSURE GAUGE AND CONDITION OF DRY CHEMICAL ANNUALLY	WEIGH GAS CARTRIDGE CHECK CONDITION OF DRY CHEMICAL ANNUALLY

Note: One hundred feet, or less, of 1-1/2 inch hose, with a nozzle capable of discharging water at 25 gallons or more per minute, may be substituted for a fire extinguisher rated not more than 2A in the designated area provided that the hose line can reach all points in the area.

(i) If fire hose connections are not compatible with local firefighting equipment, the contractor shall provide adapters, or equivalent, to permit connections.

(j) During demolition involving combustible materials, charged hose lines, supplied by hydrants, water tank trucks with pumps, or equivalent, shall be made available.

(4) Fixed firefighting equipment.

(a) Sprinkler protection.

(i) If the facility being constructed includes the installation of automatic sprinkler protection, the installation shall closely follow the construction and be placed in service as soon as applicable laws permit following completion of each story.

(ii) During demolition or alterations, existing automatic sprinkler installations shall be retained in service as long as reasonable. The operation of sprinkler control valves shall be permitted only by properly authorized persons.

Note: Modification of sprinkler systems to permit alterations or additional demolition should be expedited so that the automatic protection may be returned to service as quickly as possible. Sprinkler control valves shall be checked daily at close of work to ascertain that the protection is in service.

(b) Standpipes. In all structures in which standpipes are required, or where standpipes exist in structures being altered, they shall be brought up as soon as applicable laws permit, and shall be maintained as construction progresses in such a manner that they are always ready for fire protection use. The standpipes shall be provided with Siamese fire department connections on the outside of the structure, at the street level, which shall be conspicuously marked. There shall be at least one standard hose outlet at each floor.

(5) Fire alarm devices.

(a) An alarm system, e.g., telephone system, siren, etc., shall be established by the employer whereby employees on the site and the local fire department can be alerted for an emergency.

(b) The alarm code and reporting instructions shall be conspicuously posted at phones and at employee entrances.

(6) Fire cutoffs.

(a) Fire walls and exit stairways, required for the completed buildings, shall be given construction priority. Fire doors, with automatic closing devices, shall be hung on openings as soon as practical.

(b) Fire cutoffs shall be retained in buildings undergoing alterations or demolition until operations necessitate their removal.

[Statutory Authority: RCW 49.17.010, 49.17.040, 49.17.050, 49.17.060 and 29 C.F.R. 1910 Subpart Z. WSR 14-07-086, § 296-155-260, filed 3/18/14, effective 5/1/14. Statutory Authority: RCW 49.17.010, [49.17].040, and [49.17].050. WSR 01-23-060, § 296-155-260, filed 11/20/01, effective 12/1/01; WSR 01-11-038, § 296-155-260, filed 5/9/01, effective 9/1/01. Statutory Authority: Chapter 49.17 RCW. WSR 94-15-096 (Order 94-07), § 296-155-260, filed 7/20/94, effective 9/20/94. Statutory Authority: RCW 49.17.040 and 49.17.050. WSR 86-03-074 (Order 86-14), § 296-155-260, filed 1/21/86; Order 76-6, § 296-155-260, filed 3/1/76; Order 74-26, § 296-155-260, filed 5/7/74, effective 6/6/74.]

WAC 296-155-265 Fire prevention. (1) Ignition hazards.

(a) Electrical wiring and equipment for light, heat, or power purposes shall be installed in compliance with the requirements of Part I of this standard.

(b) Internal combustion engine powered equipment shall be so located that exhausts are well away from combustible materials. When exhausts are piped to outside the building under construction, a clearance of at least 6 inches shall be maintained between such piping and combustible material.

(c) Smoking shall be prohibited at or in the vicinity of operations which constitute a fire hazard, and shall be conspicuously posted: "No smoking or open flame."

(d) Portable battery powered lighting equipment, used in connection with the storage, handling, or use of flammable gases or liquids, shall be of the type approved for the hazardous locations.

(e) The nozzle of air, inert gas, and steam lines or hoses, when used in the cleaning or ventilation of tanks and vessels that contain hazardous concentrations of flammable gases or vapors, shall be bonded to the tank or vessel shell. Bonding devices shall not be attached or detached in hazardous concentrations of flammable gases or vapors.

(f) Workers shall not take open lights or open flames near or in an open sewer manhole, gas main, conduit or other similar place until the absence of explosive or harmful gases has been assured. Open lights or flames shall not be carried into areas and enclosures where flammable vapors or exposed low flash point solvents exist. Only approved and suitable protected lights shall be used.

(2) Temporary buildings.

(a) No temporary building shall be erected where it will adversely affect any means of exit.

(b) Temporary buildings, when located within another building or structure, shall be of either noncombustible construction or of combustible construction having a fire resistance of not less than 1 hour.

(c) Temporary buildings, located other than inside another building and not used for the storage, handling, or use of flammable liquids, flammable gases, explosives, or blasting agents, or similar hazardous occupancies, shall be located at a distance of not less than 10 feet from another building or structure. Groups of temporary buildings, not exceeding 2,000 square feet in aggregate, shall, for the purpose of this part, be considered a single temporary building.

(3) Open yard storage.

(a) Combustible materials shall be piled with due regard to the stability of piles and in no case higher than 20 feet.

(b) Driveways between and around combustible storage piles shall be at least 15 feet wide and maintained free from accumulation of rubbish, equipment, or other articles or materials. Driveways shall be so spaced that a maximum grid system unit of 50 feet by 150 feet is produced.

(c) The entire storage site shall be kept free from accumulation of unnecessary combustible materials. Weeds and grass shall be kept down and a regular procedure provided for the periodic cleanup of the entire area.

(d) When there is a danger of an underground fire, that land shall not be used for combustible or flammable storage.

(e) Method of piling shall be solid wherever possible and in orderly and regular piles. No combustible material shall be stored outdoors within 10 feet of a building or structure.

(f) Portable fire extinguishing equipment, suitable for the fire hazard involved, shall be provided at convenient, conspicuously accessible locations in the yard area. Portable fire extinguishers, rated not less than 2A, shall be placed so that

maximum travel distance to the nearest unit shall not exceed 100 feet.

(4) Indoor storage.

(a) Storage shall not obstruct, or adversely affect, means of exit.

(b) All materials shall be stored, handled, and piled with due regard to their fire characteristics.

(c) Noncompatible materials, which may create a fire hazard, shall be segregated by a barrier having a fire resistance of at least 1 hour.

(d) Material shall be piled to minimize the spread of fire internally and to permit convenient access for firefighting. Stable piling shall be maintained at all times. Aisle space shall be maintained to safely accommodate the widest vehicle that may be used within the building for firefighting purposes.

(e) Clearance of at least 36 inches shall be maintained between the top level of the stored material and the sprinkler deflectors.

(f) Clearance shall be maintained around lights and heating units to prevent ignition of combustible materials.

(g) A clearance of 24 inches shall be maintained around the path of travel of fire doors unless a barricade is provided, in which case no clearance is needed. Material shall not be stored within 36 inches of a fire door opening.

[Statutory Authority: RCW 49.17.010, 49.17.040, 49.17.050, 49.17.060 and 29 C.F.R. 1910 Subpart Z. WSR 14-07-086, § 296-155-265, filed 3/18/14, effective 5/1/14. Statutory Authority: Chapter 49.17 RCW. WSR 88-23-054 (Order 88-25), § 296-155-265, filed 11/14/88; Order 74-26, § 296-155-265, filed 5/7/74, effective 6/6/74.]

WAC 296-155-270 Flammable liquids. (1) General requirements.

(a) Only approved containers and portable tanks shall be used for storage and handling of flammable liquids. Approved metal safety cans, or department of transportation approved containers shall be used for the handling and use of flammable liquids in quantities five gallons or less, except that this shall not apply to those flammable liquid materials which are highly viscid (extremely hard to pour), which may be used and handled in original shipping containers. For quantities of one gallon or less, only the original container may be used for storage, use, and handling of flammable liquids.

(b) Flammable liquids shall not be stored in areas used for exits, stairways, or normally used for the safe passage of people.

(c) Flammable liquid containers shall be legibly marked to indicate their contents. Each storage container for flammable liquids, with a capacity of 50 gallons or more, shall have the contents of the container identified by a sign of clearly visible contrasting colors with letters at least 3 inches high, painted on the container at the discharge valve and at the fill point.

(d) Gasoline shall not be used as a solvent or a cleaning agent.

(2) Indoor storage of flammable liquids.

(a) No more than 25 gallons of flammable liquids shall be stored in a room outside of an approved storage cabinet. For storage of liquid petroleum gas, see WAC 296-155-275.

(b) Quantities of flammable liquid in excess of 25 gallons shall be stored in an acceptable or approved cabinet meeting the following requirements:

(i) Acceptable wooden storage cabinets shall be constructed in the following manner, or equivalent: The bottom, sides, and top shall be constructed of an exterior grade of plywood at least 1 inch in thickness, which shall not break down or delaminate under standard fire test conditions. All joints shall be rabbeted and shall be fastened in two directions with flathead wood screws, when more than one door is used, there shall be a rabbeted overlap of not less than 1 inch. Steel hinges shall be mounted in such a manner as to not lose their holding capacity due to loosening or burning out of the screws when subjected to fire. Such cabinets shall be painted inside and out with fire retardant paint.

(ii) Approved metal storage cabinets will be acceptable.

(iii) Cabinets shall be labeled in conspicuous lettering, "Flammable—Keep Away from Open Flames."

(c) Not more than 60 gallons of Category 1, 2, or 3 flammable liquids or 120 gallons of Category 4 flammable liquids shall be stored in any one storage cabinet. Not more than three such cabinets may be located in a single storage area. Quantities in excess of this shall be stored in an inside storage room.

(d)(i) Inside storage room shall be constructed to meet the required fire-resistive rating for their use. Such construction shall comply with the test specifications set forth in Standard Methods of Fire Test of Building Construction and Material, NFPA 251-1972.

(ii) Where an automatic extinguishing system is provided, the system shall be designed and installed in an approved manner. Openings to other rooms or buildings shall be provided with noncombustible liquid-tight raised sills or ramps at least 4 inches in height, or the floor in the storage area shall be at least 4 inches below the surrounding floor. Openings shall be provided with approved self-closing fire doors. The room shall be liquid-tight where the walls join the floor. A permissible alternate to the sill or ramp is an open-grated trench, inside of the room, which drains to a safe location. Where other portions of the building or other buildings are exposed, windows shall be protected as set forth in the Standard for Fire Doors and Windows, NFPA No. 80-1983, for Class E or F openings. Wood of at least 1-inch nominal thickness may be used for shelving, racks, dunnage, scuffboards, floor overlay and similar installations.

(iii) Materials which will react with water and create a fire hazard shall not be stored in the same room with flammable liquids.

(iv) Storage in inside storage rooms shall comply with Table D-2 following:

TABLE D-2

Fire protection provided	Fire resistance	Maximum size	Total allowable quantities gals./sq. ft./floor area
Yes	2 hrs.	500 sq. ft.	10
No	2 hrs.	500 sq. ft.	4
Yes	1 hr.	150 sq. ft.	5
No	1 hr.	150 sq. ft.	2

Note: Fire protection system shall be sprinkler, water spray, carbon dioxide or other system approved by a nationally recognized testing laboratory for this purpose.

(v) Electrical wiring and equipment located in inside storage rooms shall be approved for Class 1, Division 1, hazardous locations. For definition of Class 1, Division 1, hazardous locations, see WAC 296-155-456.

(vi) Every inside storage room shall be provided with either a gravity or a mechanical exhausting system. Such system shall commence not more than 12 inches above the floor and be designed to provide for a complete change of air within the room at least 6 times per hour. If a mechanical exhausting system is used, it shall be controlled by a switch located outside of the door. The ventilating equipment and any lighting fixtures shall be operated by the same switch. An electric pilot light shall be installed adjacent to the switch if Category 1, 2, or 3 flammable liquids are dispensed within the room. Where gravity ventilation is provided, the fresh air intake, as well as the exhausting outlet from the room, shall be on the exterior of the building in which the room is located.

(vii) In every inside storage room there shall be maintained one clear aisle at least 3 feet wide. Containers over 30 gallons capacity shall not be stacked one upon the other.

(viii) Flammable liquids in excess of that permitted in inside storage rooms shall be stored outside of buildings in accordance with subsection (3) of this section.

(3) Storage outside buildings.

(a) Storage of containers (not more than 60 gallons each) shall not exceed 1,100 gallons in any one pile or area. Piles or groups of containers shall be separated by a 5-foot clearance. Piles or groups of containers shall not be nearer than 20 feet to a building.

(b) Within 200 feet of each pile of containers, there shall be a 12-foot-wide access way to permit approach of fire control apparatus.

(c) The storage area shall be graded in a manner to divert possible spills away from buildings or other exposures, or shall be surrounded by a curb or earth dike at least 12 inches high. When curbs or dikes are used, provisions shall be made for draining off accumulations of ground or rain water, or spills of flammable liquids. Drains shall terminate at a safe location and shall be accessible to operation under fire conditions.

(d) Outdoor portable tank storage.

(i) Portable tanks shall not be nearer than 20 feet from any building. Two or more portable tanks, grouped together, having a combined capacity in excess of 2,200 gallons, shall be separated by a 5-foot-clear area. Individual portable tanks exceeding 1,100 gallons shall be separated by a 5-foot-clear area.

(ii) Within 200 feet of each portable tank, there shall be a 12-foot-wide access way to permit approach of fire control apparatus.

(e) Storage areas shall be kept free of weeds, debris, and other combustible material not necessary to the storage.

(f) Portable tanks, not exceeding 660 gallons, shall be provided with emergency venting and other devices, as required by chapters III and IV of NFPA 30-1972, The Flammable and Combustible Liquids Code.

(g) Portable tanks, in excess of 660 gallons, shall have emergency venting and other devices, as required by chapters II and III of the Flammable and Combustible Liquids Code, NFPA 30-1972.

(4) Fire control for flammable liquid storage.

(a) At least one portable fire extinguisher, having a rating of not less than 20-B units, shall be located outside of, but not more than 10 feet from, the door opening into any room used for storage of more than 60 gallons of flammable liquids.

(b) At least one portable fire extinguisher having a rating of not less than 20-B units shall be located not less than 25 feet, nor more than 75 feet, from any flammable liquid storage area located outside.

(c) When sprinklers are provided, they shall be installed in accordance with the Standard for the Installation of Sprinkler Systems, NFPA 13-1972.

(d) At least one portable fire extinguisher having a rating of not less than 20-B:C units shall be provided on all tank trucks or other vehicles used for transporting and/or dispensing flammable liquids.

Note: For additional requirements relating to portable fire extinguishers see WAC 296-800-300.

(5) Dispensing liquids.

(a) Areas in which flammable liquids are transferred at the same time, in quantities greater than 5 gallons from one tank or container to another tank or container, shall be separated from other operations by 25-feet distance or by construction having a fire-resistance of at least 1 hour. Drainage or other means shall be provided to control spills. Adequate natural or mechanical ventilation shall be provided to maintain the concentration of flammable vapor at or below 10 percent of the lower flammable limit.

(b) Transfer Category 1, 2, or 3 flammable liquids from one container to another shall be done only when containers are electrically interconnected (bonded).

(c) Flammable liquids shall be drawn from or transferred into vessels, containers, or tanks within a building or outside only through a closed piping system, from safety cans, by means of a device drawing through the top, or from a container, or portable tanks, by gravity or pump, through an approved self-closing valve. Transferring by means of air pressure on the container or portable tank is prohibited.

(d) The dispensing units shall be protected against collision damage.

(e) Dispensing devices and nozzles for Category 1, 2, or 3 flammable liquids shall be of an approved type, as required by WAC 296-24-33015.

(6) Handling liquids at point of final use.

(a) Category 1, 2, or 3 flammable liquids shall be kept in closed containers when not actually in use.

(b) Leakage or spillage of flammable liquids shall be disposed of promptly and safely.

(c) Category 1, 2, or 3 flammable liquids shall be used only where there are no open flames or other sources of ignition within 50 feet of the operation, unless conditions warrant greater clearance.

(7) Service and refueling areas.

(a) Flammable liquids shall be stored in approved closed containers, in tanks located underground, or in aboveground portable tanks.

(b) The tank trucks shall comply with the requirements covered in the Standard for Tank Vehicles for Flammable and Combustible Liquids, NFPA No. 385-1977.

(c) The dispensing hose shall be an approved type.

(d) The dispensing nozzle shall be an approved automatic-closing type.

(e) Underground tanks shall not be abandoned.

(f) Clearly identified and easily accessible switch(es) shall be provided at a location remote from dispensing devices to shut off the power to all dispensing devices in the event of an emergency.

(g)(i) Heating equipment of an approved type may be installed in the lubrication or service area where there is no dispensing or transferring of Category 1, 2, or 3 flammable liquids, provided the bottom of the heating unit is at least 18 inches above the floor and is protected from physical damage.

(ii) Heating equipment installed in lubrication or service areas, where Category 1, 2, or 3 flammable liquids are dispensed, shall be of an approved type for garages, and shall be installed at least 8 feet above the floor.

(h) There shall be no smoking or open flames in the areas used for fueling, servicing fuel systems for internal combustion engines, receiving or dispensing of flammable liquids.

(i) Conspicuous and legible signs prohibiting smoking shall be posted.

(j) The motor of any equipment being fueled shall be shut off during the fueling operation.

(k) Each service or fueling area shall be provided with at least one fire extinguisher having a rating of not less than 20BC located so that an extinguisher will be within 75 feet of each pump, dispenser, underground fill pipe opening, and lubrication or service area.

Note: For additional requirements relating to portable fire extinguishers see WAC 296-800-300.

[Statutory Authority: RCW 49.17.010, 49.17.040, 49.17.050, 49.17.060 and 29 C.F.R. 1910 Subpart Z. WSR 14-07-086, § 296-155-270, filed 3/18/14, effective 5/1/14. Statutory Authority: RCW 49.17.010, [49.17].040, and [49.17].050. WSR 01-17-033, § 296-155-270, filed 8/8/01, effective 9/1/01; WSR 99-17-094, § 296-155-270, filed 8/17/99, effective 12/1/99. Statutory Authority: Chapter 49.17 RCW. WSR 88-23-054 (Order 88-25), § 296-155-270, filed 11/14/88. Statutory Authority: RCW 49.17.040 and 49.17.050. WSR 86-03-074 (Order 86-14), § 296-155-270, filed 1/21/86; Order 74-26, § 296-155-270, filed 5/7/74, effective 6/6/74.]

WAC 296-155-275 Liquefied petroleum gas (LP-gas). (1) Approval of equipment and systems.

(a) Each system shall have containers, valves, connectors, manifold valve assemblies, and regulators of an approved type.

(b) All cylinders shall meet the department of transportation specification identification requirements published in 49 C.F.R. Part 178, Shipping Container Specifications.

(2) Welding on LP-gas containers. Welding is prohibited on containers.

(3) Container valves and container accessories.

(a) Valves, fittings, and accessories connected directly to the container, including primary shut off valves, shall have a rated working pressure of at least 250 p.s.i.g. and shall be of material and design suitable for LP-gas service.

(b) Connections to containers, except safety relief connections, liquid level gauging devices, and plugged openings, shall have shutoff valves located as close to the container as practicable.

(4) Safety devices.

(a) Every container and every vaporizer shall be provided with one or more approved safety relief valves or devices. These valves shall be arranged to afford free vent to the outer air with discharge not less than 5 feet horizontally away from any opening into a building which is below such discharge.

(b) Shutoff valves shall not be installed between the safety relief device and the container, or the equipment or piping to which the safety relief device is connected, except that a shutoff valve may be used where the arrangement of this valve is such that full required capacity flow through the safety relief device is always afforded.

(c) Container safety relief devices and regulator relief vents shall be located not less than 5 feet in any direction from air openings into sealed combustion system appliances or mechanical ventilation air intakes.

(5) Dispensing.

(a) Filling of fuel containers for trucks or motor vehicles from bulk storage containers shall be performed not less than 10 feet from the nearest masonry-walled building, or not less than 25 feet from the nearest building or other construction and, in any event, not less than 25 feet from any building opening.

(b) Filling of portable containers or containers mounted on skids from storage containers shall be performed not less than 50 feet from the nearest building.

(6) Requirements for appliances.

(a) LP-gas consuming appliances shall be approved types.

(b) Any appliance that was originally manufactured for operation with a gaseous fuel other than LP-gas, and is in good condition, may be used with LP-gas only after it is properly converted, adapted, and tested for performance with LP-gas before the appliance is placed in use.

(7) Containers and regulating equipment installed outside of buildings or structures. Containers shall be upright upon firm foundations or otherwise firmly secured. The possible effect on the outlet piping of settling shall be guarded against by a flexible connection or special fitting.

(8) Containers and equipment used inside of buildings or structures.

(a) When operational requirements make portable use of containers necessary, and their location outside of buildings or structures is impractical, containers and equipment are permitted to be used inside of buildings or structures in accordance with (b) through (k) of this subsection. In addition, there may be provisions of this section that are applicable to the particular use or occupancy.

(b) "Containers in use" means connected for use.

(c) Systems utilizing containers having a water capacity greater than 2 1/2 pounds (nominal 1 pound LP-gas capacity) shall be equipped with excess flow valves. Such excess flow valves shall be either integral with the container valves or in the connections to the container valve outlets.

(d) Regulators, when required, shall be either directly connected to the container valves or to manifolds connected to the container valves. The regulator shall be suitable for use with LP-gas. Manifolds and fittings connecting containers to

pressure regulator inlets shall be designed for at least 250 p.s.i.g. service pressure.

(e) Valves on containers having water capacity greater than 50 pounds (nominal 20 pounds LP-gas capacity) shall be protected from damage while in use or storage.

(f) Aluminum piping or tubing shall not be used.

(g) Hose shall be designed for a working pressure of at least 250 p.s.i.g. Design, construction, and performance of hose, and hose connections shall have their suitability determined by listing by a nationally recognized testing agency. The hose length shall be as short as practical. Hoses shall be long enough to permit compliance with spacing provisions of (a) through (m) of this subsection, without kinking or straining, or causing hose to be so close to a burner as to be damaged by heat.

(h) Portable heaters, including salamanders, shall be equipped with an approved automatic device to shut off the flow of gas to the mainburner, and pilot if used, in the event of flame failure. Such heaters, having inputs above 50,000 BTU per hour, shall be equipped with either a pilot, which must be lighted and proved before the main burner can be turned on, or an electrical ignition system.

Note: The provisions of this subdivision do not apply to portable heaters under 7,500 BTU per hour input when used with containers having a maximum water capacity of 2 1/2 pounds.

(i) Container valves, connectors, regulators, manifolds, piping, and tubing shall not be used as structural supports for heaters.

(j) Containers, regulating equipment, manifolds, pipe, tubing, and hose shall be located to minimize exposure to high temperatures or physical damage.

(k) Containers having a water capacity greater than 2 1/2 pounds (nominal 1 pound LP-gas capacity) connected for use shall stand on a firm and substantially level surface and, when necessary, shall be secured in an upright position.

(l) The maximum water capacity of individual containers shall be 245 pounds (nominal 100 pounds LP-gas capacity).

(m) For temporary heating, heaters (other than integral heater-container units) shall be located at least 6 feet from any LP-gas container. This shall not prohibit the use of heaters specifically designed for attachment to the container or to a supporting standard, provided they are designed and installed so as to prevent direct or radiant heat application from the heater onto the containers. Blower and radiant type heaters shall not be directed toward any LP-gas container within 20 feet.

(n) If two or more heater-container units, of either the integral or nonintegral type, are located in an unpartitioned area on the same floor, the container or containers of each unit shall be separated from the container or containers of any other unit by at least 20 feet.

(o) When heaters are connected to containers for use in an unpartitioned area on the same floor, the total water capacity of containers, manifolded together for connection to a heater or heaters, shall not be greater than 735 pounds (nominal 300 pounds LP-gas capacity). Such manifolds shall be separated by at least 20 feet.

(p) Storage of containers awaiting use shall be in accordance with subsections (10) and (11) of this section.

(9) Multiple container systems.

(a) Valves in the assembly of multiple container systems shall be arranged so that replacement of containers can be made without shutting off the flow of gas in the system. This provision is not to be construed as requiring an automatic changeover device.

(b) Heaters shall be equipped with an approved regulator in the supply line between the fuel cylinder and the heater unit. Cylinder connectors shall be provided with an excess flow valve to minimize the flow of gas in the event the fuel line becomes ruptured.

(c) Regulators and low-pressure relief devices shall be rigidly attached to the cylinder valves, cylinders, supporting standards, the building walls, or otherwise rigidly secured, and shall be so installed or protected from the elements.

(10) Storage of LPG containers. Storage of LPG within building is prohibited.

(11) Storage outside of buildings.

(a) Storage outside of buildings, for containers awaiting use, shall be located from the nearest building or group of buildings, in accordance with Table D-3:

TABLE D-3

Quantity of LP-gas stored:	Distance (feet)
500 lbs. or less	0
501 to 6,000 lbs.	10
6,001 to 10,000 lbs.	20
Over 10,000 lbs.	25

(b) Containers shall be in a suitable ventilated enclosure or otherwise protected against tampering, or possible damage by vehicular traffic.

(12) Fire protection. Storage locations shall be provided with at least one approved portable fire extinguisher having a rating of not less than 20-B:C.

Note: For additional requirements relating to portable fire extinguishers see WAC 296-800-300.

[Statutory Authority: RCW 49.17.010, [49.17].040, and [49.17].050. WSR 01-17-033, § 296-155-275, filed 8/8/01, effective 9/1/01. Statutory Authority: RCW 49.17.040 and 49.17.050. WSR 86-03-074 (Order 86-14), § 296-155-275, filed 1/21/86; Order 76-29, § 296-155-275, filed 9/30/76; Order 74-26, § 296-155-275, filed 5/7/74, effective 6/6/74.]

WAC 296-155-280 Temporary heating devices. (1) Ventilation.

(a) Fresh air shall be supplied in sufficient quantities to maintain the health and safety of workers. Where natural means of fresh air supply is inadequate, mechanical ventilation shall be provided.

(b) When heaters are used in confined spaces, special care shall be taken to provide sufficient ventilation in order to ensure proper combustion, maintain the health and safety of workers, and limit temperature rise in the area.

(2) Clearance and mounting.

(a) Temporary heating devices shall be installed to provide clearance to combustible material not less than the amount shown in Table D-4.

(b) Temporary heating devices, which are listed for installation with lesser clearances than specified in Table D-4, may be installed in accordance with their approval.

TABLE D-4

Heating appliances	Minimum clearance, (inches)		
	Sides	Rear	Chimney connector
Room heater, circulating type	12	12	18
Room heater, radiant type	36	36	18

(c) Heaters not suitable for use on wood floors shall not be set directly upon them or other combustible materials. When such heaters are used, they shall rest on suitable heat insulating material or at least 1-inch concrete, or equivalent. The insulating material shall extend beyond the heater 2 feet or more in all directions.

(d) Heaters used in the vicinity of combustible tarpaulins, canvas, or similar coverings shall be located at least 10 feet from the coverings. The coverings shall be securely fastened to prevent ignition or upsetting of the heater due to wind action on the covering or other material.

(3) Stability. Heaters, when in use, shall be set horizontally level, unless otherwise permitted by the manufacturer's markings.

(4) Oil-fired heaters.

(a) Flammable liquid-fired heaters shall be equipped with a primary safety control to stop the flow of fuel in the event of flame failure. Barometric or gravity oil feed shall not be considered a primary safety control.

(b) Heaters designed for barometric or gravity oil feed shall be used only with the integral tanks.

(c) Heaters specifically designed and approved for use with separate supply tanks may be directly connected for gravity feed, or an automatic pump, from a supply tank.

(5) Salamanders.

(a) Coverage. The use of solid fuel salamanders is prohibited in buildings and on scaffolds.

(b) General requirements.

(i) All solid fuel salamanders shall be designed and constructed for use with solid fuel, that is, coal or coke.

(ii) Solid fuel salamanders shall be equipped with a cover designed as part of the unit, to prevent spillage of burning material in case of tipover.

(iii) Salamanders shall be assembled in accordance with the instructions issued by the manufacturer.

(iv) The safeguards engineered into the product shall be maintained and any replacement shall be equivalent thereto.

(v) Salamanders shall be stored in such a manner as to prevent deterioration or damage to the unit.

(c) Operation.

(i) Manufacturers' instructions shall be followed by the user.

(ii) Each time a salamander is placed in operation it shall be checked to insure that it is functioning properly. Its operation shall be checked periodically thereafter.

(iii) When concentrations of carbon monoxide attain quantities greater than 35 parts per million (0.0035 percent) to air volume at employee breathing levels, the salamander shall be extinguished unless additional natural or mechanical ventilation is provided to reduce the carbon monoxide content to permissible limits.

(iv) Tests for presence of carbon monoxide shall be made by a qualified person within 1 hour after the start of each shift and at least every 3 hours thereafter. If concentrations of carbon monoxide reach 20 parts per million to air volume, tests shall be made more frequently to determine if there is a continuing increase of carbon monoxide concentration.

(v) Records of all tests including the date, time, results obtained, and person making tests, shall be maintained for the duration of the project.

(vi) No persons shall be permitted to be within the area being heated by the salamanders except under the following circumstances: When tending the salamanders; when testing the atmosphere; or in emergency situations.

(vii) No employee shall be permitted to enter the heated area until notification is given to another person located outside. Periodic checks shall be made to ensure the health and safety of employees entering the heated area.

(viii) When a salamander is being used, the responsibility for its operation and maintenance shall be assigned to a qualified employee.

(ix) Salamanders shall not be moved, handled, or serviced while hot or burning, or while component parts are hot to the touch.

(x) Salamanders, when in use, shall be set level with the horizontal unless otherwise permitted by the manufacturer's markings. Salamanders shall be designed so as not to tip over when placed on a surface inclined 25° to the horizontal.

(xi) If equivalent protection and safety is afforded by alternative design, the 25° limitation may be reduced.

(xii) Salamanders not suitable for use on wood floors shall not be set directly upon them or other combustible materials. When such salamanders are used they shall rest on suitable insulating material or at least 1-inch concrete or equivalent. The insulating material shall extend beyond the salamander 2 feet or more in all directions.

(xiii) Salamanders used in the vicinity of tarpaulins, canvas, or similar coverings shall be located a safe distance from coverings and other combustible materials. The coverings shall be securely fastened to prevent ignition of the covering or upsetting of the salamanders due to wind action on the covering or other material.

(xiv) Salamanders in use shall be protected to prevent flame extinguishment.

(d) Ventilation.

(i) Fresh air shall be supplied in sufficient quantities to maintain the health and safety of employees. Where natural means for fresh air supply is inadequate, mechanical ventilation shall be provided. Particular attention shall be given to confined spaces and pockets where heat and fumes may accumulate and employees may be present (roof areas, peaks, basement).

(ii) When salamanders are used in confined spaces, special care shall be taken to provide sufficient ventilation in

order to assure proper combustion, maintain the health and safety of employees, and limit temperature rise in the area.

(e) Fueling.

(i) Salamanders shall be refueled only by a person trained in such operations.

(ii) Only a one day's supply of heater fuel shall be stored inside a building in the vicinity of the salamander. General fuel storage shall be outside the structure.

(iii) All fuel storage shall be maintained a minimum of 25 feet from source of ignition.

(f) Maintenance.

(i) The user shall comply with the maintenance instructions as provided by the manufacturer.

(ii) Equipment showing evidence of deterioration or damage that constitutes a safety or health hazard shall be removed from service.

(iii) Salamander repairs shall be performed in accordance with the manufacturer's recommendations, and replacement parts shall be equal to, the equivalent of, or the same as the original salamander equipment.

[Statutory Authority: Chapter 49.17 RCW. WSR 94-15-096 (Order 94-07), § 296-155-280, filed 7/20/94, effective 9/20/94; Order 76-29, § 296-155-280, filed 9/30/76; Order 74-26, § 296-155-280, filed 5/7/74, effective 6/6/74.]

PART E

SIGNALING AND FLAGGERS

WAC 296-155-305 Signaling and flaggers.

Definition:

Flagger means a person who provides temporary traffic control.

For the purposes of this chapter, *MUTCD* means the Federal Highway Administration's Manual on Uniform Traffic Control as currently modified and adopted by the Washington state department of transportation.

Link: For the current version of the MUTCD, see the department of transportation's web site at http://www.wsdot.wa.gov/ and type MUTCD into the search box.

(1) General requirements for signaling and flaggers.

(a) Employers must first apply the requirements in this section. Then you must set up and use temporary traffic controls according to the guidelines and recommendations in Part VI of the MUTCD.

(b) Job site workers with specific traffic control responsibilities must be trained in traffic control techniques, device usage, and placement.

Note:

• You may purchase copies of the MUTCD by writing:

U.S. Government Printing Office
Superintendent of Documents
Mail Stop: SSOP,
Washington D.C. 20402-9328

• To view and print a copy of the MUTCD go to http://www.wsdot.wa.gov/ and type MUTCD into the search box.

(2) When to use flaggers.

(a) Flaggers are to be used only when other reasonable traffic control methods will not adequately control traffic in the work zone.

(b) If signs, signals, and barricades do not provide necessary protection from traffic at work zones and construction sites on or adjacent to a highway or street, then you must use flaggers or other appropriate traffic controls.

(3) Flagger signaling.

(a) Flagger signaling must be with sign paddles approved by WSDOT and conform to guidelines and recommendations of MUTCD.

(b) Sign paddles must comply with the requirements of the MUTCD.

(c) When flagging is done during periods of darkness, sign paddles must be retroreflective or illuminated in the same manner as signs.

(d) During emergency situations, red flags, meeting the specifications of the MUTCD, may be used to draw a driver's attention to particularly hazardous conditions. In nonemergency situations, a red flag may be held in a flagger's free hand to supplement the use of a sign paddle.

(4) Adequate warning of approaching vehicles. Employers must:

• Position work zone flaggers so they are not exposed to traffic or equipment approaching them from behind.

– If this is not possible, then the employer, responsible contractor, and/or project owner must develop and use a method to ensure that flaggers have adequate visual warning of traffic and equipment approaching from behind.

Note: • The following are some optional examples of methods that may be used to adequately warn or protect flaggers:

– Mount a mirror on the flagger's hard hat.

– Use an observer.

– Use "jersey" barriers.

• The department recognizes the importance of adequately trained flaggers and supports industry efforts to improve the quality of flagger training. However, training alone is not sufficient to comply with the statutory requirement of revising flagger safety standards to improve options available that ensure flagger safety and that flaggers have adequate visual warning of objects approaching from behind them.

(5) High-visibility garments for flaggers.

(a) While flagging during daylight hours, a flagger must at least wear, as an outer garment:

• A high-visibility safety garment designed according to Class 2 specifications in ANSI/ISEA 107-1999, American National Standard for High-Visibility Safety Apparel.

– Consisting of at least 775 square inches of background material that are fluorescent yellow-green, fluorescent orange-red or fluorescent red in color;

AND

– 201 square inches of retroreflective material that encircles the torso and is placed to provide 360 degrees visibility around the flagger.

• A high visibility hard hat that is white, yellow, yellow-green, orange or red in color.

Note: A high-visibility garment meets Class 2 specifications if the garment:

• Meets the requirements above;

OR

• Has an ANSI "Class 2" label.

Definition:

For the purpose of this rule, **hours of darkness** means one-half hour before sunset to one-half hour after sunrise.

(b) While flagging during hours of darkness, a flagger must at least wear, as an outer garment:

• A high-visibility safety garment designed according to Class 2 specifications in ANSI/ISEA 107-1999.

– Consisting of at least 775 square inches of background material that are fluorescent yellow-green, fluorescent orange-red or fluorescent red in color;

AND

– 201 square inches of retroreflective material that encircles the torso and is placed to provide 360 degrees visibility around the flagger.

• White coveralls, or other coveralls or trousers that have retroreflective banding on the legs designed according to ANSI/ISEA 107-1999 standards.

• When snow or fog limit visibility, pants, coveralls, or rain gear, meeting these additional requirements must be worn:

- In a highly visible color;

– With retroreflective banding on the legs;

– Designed according to ANSI/ISEA 107-1999.

• A high-visibility hard hat:

– Marked with at least 12 square inches of retroreflective material applied to provide 360 degrees of visibility.

Note: ANSI/ISEA 107-1999 is available by:

• Purchasing copies of ANSI/ISEA 107-1999 by writing:

– American National Standards Institute
11 West 42nd Street
New York, NY 10036

OR

– Contacting the ANSI web site at http://web.ansi.org/.

OR

• Reading a copy of ANSI/ISEA 107-1999 at any Washington state library.

(6) Flagger training. Employers must make sure that:

(a) Each flagger has in their possession:

• A valid Washington traffic control flagger card; or

• A valid flagger card from a state such as:

– Oregon;

– Idaho;

– Montana;

OR

– Other states having a flagger training reciprocity agreement with Washington.

(b) The flagger card shows the following:

• Verification that the flagger training required is completed;

• Date the flagger received their flagger training;

• Name of the instructor providing the flagger training;

• Name of the state that issued the flagger card;

• The card's expiration date, not to exceed three years from the date of issuance;

AND

• The flagger's picture or a statement that says "valid with photo ID."

(c) Flagger training is based upon the MUTCD.

Exemption: Personnel that have not completed a flagger-training course may be assigned duties as flaggers only during emergencies. Emergency assignments are temporary and last only until a certified flagger can be put into the position.

Definition:

For the purpose of this rule, **emergency** means an unforeseen occurrence endangering life, limb, or property.

(7) Flagger orientation and traffic control plan.

(a) The employer, responsible contractor or project owner must conduct an orientation that familiarizes the flagger with the job site. This requirement applies each time the flagger is assigned to a new project or when job site conditions change significantly.

The orientation must include, but is not limited to:

• The flagger's role and location on the job site;

• Motor vehicle and equipment in operation at the site;

• Job site traffic patterns;

• Communications and signals to be used between flaggers and equipment operators;

• On-foot escape route;

AND

• Other hazards specific to the job site.

(b) If flaggers are used on a job that will last more than one day, then the employer, responsible contractor and/or project owner must keep on-site, a current site specific traffic control plan. The purpose of this plan is to help move traffic through or around the construction zone in a way that protects the safety of the traveling public, pedestrians and workers.

The plan must include, but is not limited to, the following items when they are appropriate:

• Sign use and placement;

• Application and removal of pavement markings;

• Construction;

• Scheduling;

• Methods and devices for delineation and channelization;

• Placement and maintenance of devices;

• Placement of flaggers;

• Roadway lighting;

• Traffic regulations;

AND

• Surveillance and inspection.

(8) Advance warning signs.

(a) Employers must provide the following on all flagging operations:

• A three sign advance warning sequence on all roadways with a speed limit below 45 mph.

• A four sign advance warning sequence on all roadways with a 45 mph or higher speed limit.

(b) Warning signs must reflect the actual condition of the work zone. When not in use, warning signs must either be taken down or covered.

(c) Employers must make sure to follow Table 1 for spacing of advance warning sign placement.

Table 1. Advanced Warning Sign Spacing

Road Type	Speed	Distances Between Advance Warning Signs*			
		A**	B**	C**	D**
Freeways & Expressways	70 55	1,500 ft.+/- or per the MUTCD.	1,500 ft.+/- or per the MUTCD.	1,500 ft.+/- or per the MUTCD.	1,500 ft.+/- or per the MUTCD.
Rural Highways	65 60	800 ft.+/-	800 ft.+/-	800 ft.+/-	800 ft.+/-
Rural Roads	55 45	500 ft.+/-	500 ft.+/-	500 ft.+/-	500 ft.+/-
Rural Roads and Urban Arterials	40 35	350 ft.+/-	350 ft.+/-	350 ft.+/-	N/A
Rural Roads, Urban Streets, Residential Business Districts	30 25	200 ft.***	200 ft.***	200 ft.***	N/A
Urban Streets	25 or less	100 ft.***	100 ft.***	100 ft.***	N/A

* All spacing may be adjusted to accommodate interchange ramps, at-grade intersections, and driveways.

** This refers to the distance between advance warning signs. See Figure 1, Typical Lane Closure on Two-Lane Road. This situation is typical for roadways with speed limits less than 45 mph.

*** This spacing may be reduced in urban areas to fit roadway conditions.

Exemption: In a mobile flagging operation, as defined by the MUTCD when the flagger is moving with the operation, the "flagger ahead (symbol or text)" sign must be:

- Within 1,500 feet of the flagger;

AND

- The flagger station must be seen from the sign.

If terrain does not allow a motorist to see the flagger from the "flagger ahead" sign, the distance between the flagger and the sign must be shortened to allow visual contact, but in no case can the distance be less than the distance specified in Table 1, Advanced Warning Sign Spacing.

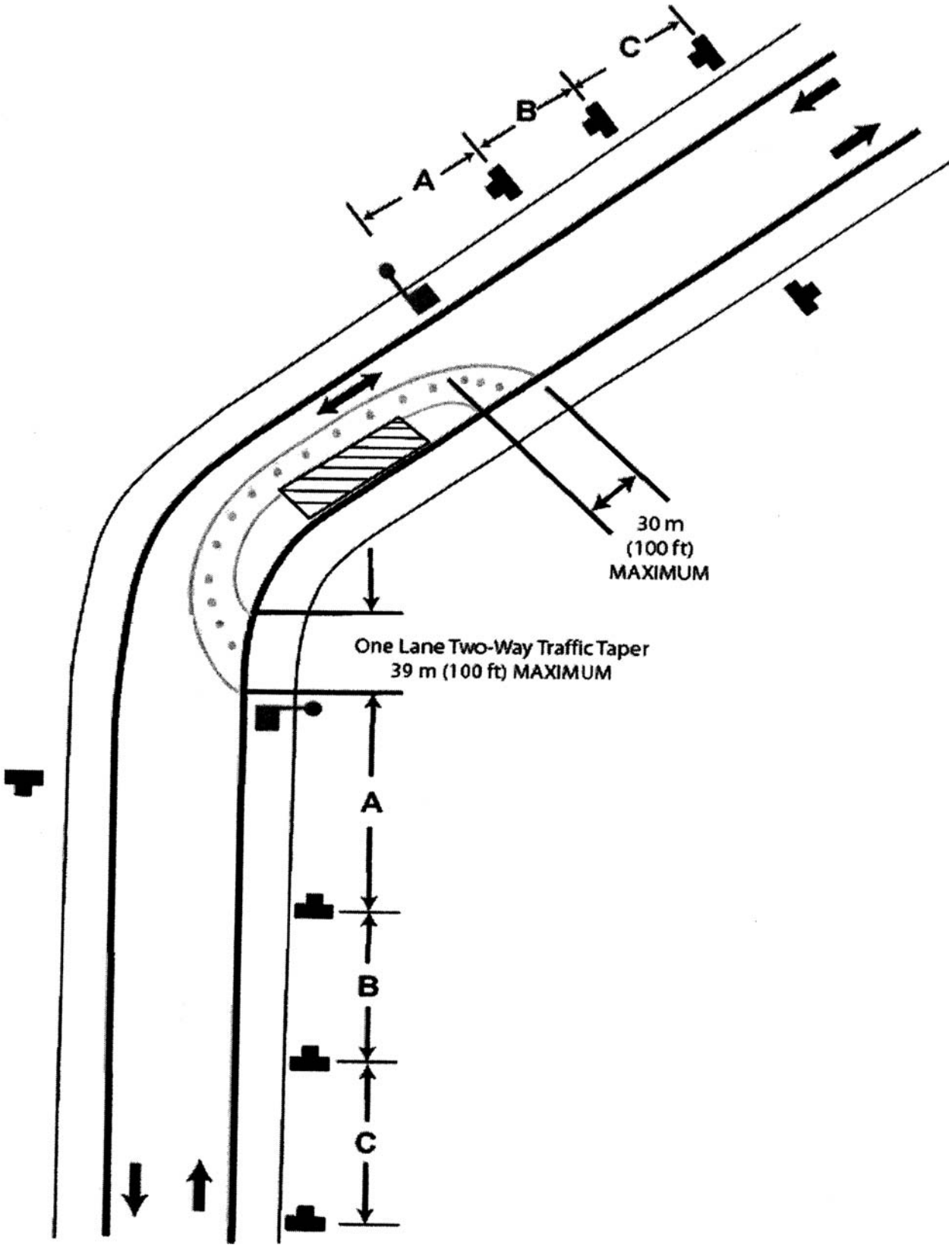
C
B
A
30 m
(100 ft)
MAXIMUM
One Lane Two-Way Traffic Taper
39 m (100 ft) MAXIMUM
A
B
C

(9) Providing a safe job site for flaggers. Employers, responsible contractors and/or project owners must make sure that:

(a) Flagger stations are located far enough in advance of the work space so that the approaching road users will have sufficient distance to stop before entering the work space. Follow Table 2 for the distance of the flagger workstation in advance of the work space.

Table 2. Distance of Flagger Station in Advance of the Work Space

Speed* (mph)	Distance (ft)**
20	35
25	55
30	85
35	120
40	170
45	220
50	280
55	335
60	415
65	485

* Posted speed, off-peak 85th-percentile speed prior to work starting or the anticipated operating speed.

** This spacing may be reduced to fit roadway and worksite conditions. Distances greater than those listed in the table are acceptable.

(b) Flaggers stand either on the shoulder adjacent to the road user being controlled or in the closed lane prior to stopping road users. A flagger must only stand in the lane being used by moving road users after road users have stopped.

Definition:

Road user means a vehicle operator, bicyclist, or pedestrian within a public roadway, including workers in temporary traffic control zones.

(c) Flagger workstations are illuminated during hours of darkness by floodlights that do not create glare that poses a hazard for drivers.

Note: To identify potential glare, observe the lighted area from various directions and angles on the main roadway after initial floodlight setup.

Exemption: Emergency situations are exempt from these illumination requirements. For the purpose of this rule, ***emergency*** means an unforeseen occurrence endangering life, limb, or property.

(d) Flaggers are not assigned other duties while engaged in flagging activities.

(e) Flaggers do not use devices that may distract the flagger's vision, hearing, or attention.

• Examples of these devices include cell phones, pagers, radios, and headphones.

• Devices such as two-way radios used for communications between flaggers to direct traffic or ensure flagger safety are acceptable.

(f) Flaggers receive a rest period of at least ten minutes, on the employer's time, for each four hours of working time.

• Rest periods must be scheduled as near as possible to the midpoint of the work period.

• A flagger must not be allowed to work more than three hours without a rest period.

Exemption: Scheduled rest periods are not required where the nature of the work allows a flagger to take intermittent rest periods equivalent to ten minutes for each four hours worked.

[Statutory Authority: RCW 49.17.010, 49.17.040, 49.17.050, 49.17.060, and 29 C.F.R. 1926.201. WSR 13-24-099, § 296-155-305, filed 12/3/13, effective 1/6/14. Statutory Authority: RCW 49.17.010, 49.17.040, 49.17.050, 49.17.060. WSR 07-03-163, § 296-155-305, filed 1/24/07, effective 4/1/07; WSR 06-05-027, § 296-155-305, filed 2/7/06, effective 4/1/06; WSR 04-24-089, § 296-155-305, filed 12/1/04, effective 1/1/05; WSR 03-06-075, § 296-155-305, filed 3/4/03, effective 8/1/03. Statutory Authority: RCW 49.17.010, [49.17].040, [49.17].050, 2000 c 239, and chapter 34.05 RCW. WSR 01-04-015, § 296-155-305, filed 1/26/01, effective 2/28/01. Statutory Authority: Chapter 49.17 RCW. WSR 93-19-142 (Order 93-04), § 296-155-305, filed 9/22/93, effective 11/1/93; WSR 93-01-067 (Order 92-15), § 296-155-305, filed 12/11/92, effective 1/15/93; WSR 89-11-035 (Order 89-03), § 296-155-305, filed 5/15/89, effective 6/30/89. Statutory Authority: RCW 49.17.040 and 49.17.050. WSR 86-03-074 (Order 86-14), § 296-155-305, filed 1/21/86; Order 76-6, § 296-155-305, filed 3/1/76; Order 74-26, § 296-155-305, filed 5/7/74, effective 6/6/74.]

WAC 296-155-310 Barricades. Employers must make sure that barricades used for the protection of employees meet the requirements of Part VI of the MUTCD.

[Statutory Authority: RCW 49.17.010, 49.17.040, 49.17.050, 49.17.060. WSR 04-24-089, § 296-155-310, filed 12/1/04, effective 1/1/05; WSR 03-06-075, § 296-155-310, filed 3/4/03, effective 8/1/03. Statutory Authority: Chapter 49.17 RCW. WSR 93-19-142 (Order 93-04), § 296-155-310, filed 9/22/93, effective 11/1/93; Order 74-26, § 296-155-310, filed 5/7/74, effective 6/6/74.]

WAC 296-155-315 Definitions applicable to this part. (1) "Barricade" means an obstruction to deter the passage of persons or vehicles.

(2) "Signs" are the warnings of hazard, temporarily or permanently affixed or placed, at locations where hazards exist.

(3) "Signals" are moving signs, provided by workers, such as flaggers, or by devices, such as flashing lights, to warn of possible or existing hazards.

[Statutory Authority: RCW 49.17.010, 49.17.040, 49.17.050, 49.17.060. WSR 04-24-089, § 296-155-315, filed 12/1/04, effective 1/1/05; WSR 03-06-075, § 296-155-315, filed 3/4/03, effective 8/1/03. Statutory Authority: Chapter 49.17 RCW. WSR 94-15-096 (Order 94-07), § 296-155-315, filed 7/20/94, effective 9/20/94; Order 76-6, § 296-155-315, filed 3/1/76.]

PART F

STORAGE, USE, AND DISPOSAL

WAC 296-155-325 General requirements for storage. (1) General.

(a) All materials stored in tiers shall be stacked, racked, blocked, interlocked, or otherwise secured to prevent sliding, falling or collapse.

(b) Maximum safe load limits of floors within buildings and structures, in pounds per square foot, shall be conspicuously posted in all storage areas, except for floor or slab on grade. Maximum safe loads shall not be exceeded.

(c) Aisles and passageways shall be kept clear to provide for the free and safe movement of material handling equipment or employees. Such areas shall be kept in good repair.

(d) When a difference in road or working levels exist, means such as ramps, blocking, or grading shall be used to ensure the safe movement of vehicles between the two levels.

(e) When necessary to store building material on public thoroughfares, care must be exercised to see that it is so piled or stacked as to be safe against collapse or falling over.

(f) Material must be so located as not to interfere with, or present a hazard to employees, traffic, or the public.

(2) Material storage.

(a)(i) Material stored inside buildings under construction shall not be placed within six feet of any hoistway or inside floor openings, nor within ten feet of an exterior wall which does not extend above the top of the material stored.

(ii) Temporary floors, used in steel erection, concrete forms and shoring (i.e., stripped forms, shoring jacks, clamps, steel rods or pipes, base plates, etc.) placed within close proximity to an open-sided floor for movement to another tier for placement, shall be considered "in-process equipment and subject to the provisions contained in Parts "O" and "P" of this standard. When this type equipment is to be left overnight or for longer periods of time it shall be anchored and braced to prevent displacement in any direction. In addition this equipment shall be subject to the provisions of this subsection while in "interim storage."

(b) Each employee required to work on stored material in silos, hoppers, tanks, and similar storage areas shall be equipped with personal fall arrest equipment meeting the requirements of chapter 296-155 WAC, Part C-1.

(c) Noncompatible materials shall be segregated in storage.

(d) Bagged materials shall be stacked by stepping back the layers and cross-keying the bags at least every ten bags high.

(i) When cement and lime is delivered in paper bags they shall be carefully handled to prevent the bags bursting.

(ii) Cement and lime bags shall not be piled more than ten bags high except when stored in bins or enclosures built for the purpose of storage.

(iii) When bags are removed from the pile, the length of the pile shall be kept at an even height, and the necessary step backs every five bags maintained.

(iv) Persons handling cement and lime bags shall wear eye protection which prevents contact between the substance and the worker's eyes (such as goggles or other sealed eye protection) and shall wear long sleeve shirts with close fitting collar and cuffs.

(v) Persons shall be warned against wearing clothing that has become hard and stiff with cement.

(vi) Persons shall be instructed to report any susceptibility of their skin to cement and lime burns.

(vii) A hand cream or vaseline and eye wash shall be provided and kept ready for use to prevent burns.

(viii) Lime shall be stored in a dry place to prevent a premature slacking action that may cause fire.

(e) Materials shall not be stored on scaffolds or runways in excess of supplies needed for immediate operations.

(f) Brick stacks shall not be more than seven feet in height. When a loose brick stack reaches a height of four feet, it shall be tapered back two inches in every foot of height above the four-foot level.

(i) Brick shall never be stacked, for storage purposes, on scaffolds or runways.

(ii) When delivering brick on scaffolds inside the wall lines in wheelbarrows, they shall be dumped toward the inside of the building and not toward the wall.

(iii) Blocks shall always be stacked and not thrown in a loose pile.

(g) When masonry blocks are stacked higher than six feet, the stack shall be tapered back one-half block per tier above the 6-foot level.

(i) When blocks are stacked inside a building, the piles shall be so distributed as not to overload the floor on which they stand.

(ii) Blocks shall not be dropped or thrown from an elevation or delivered through chutes.

(h) Lumber:

(i) Used lumber shall have all nails withdrawn before stacking.

(ii) Lumber shall be stacked on level and solidly supported sills.

(iii) Lumber shall be so stacked as to be stable and self-supporting.

(iv) Lumber stacks shall not exceed twenty feet in height provided that lumber to be handled manually shall not be stacked more than sixteen feet high.

(v) All stored lumber shall be stacked on timber sills to keep it off the ground. Sills shall be placed level on solid supports.

(vi) Cross strips shall be placed in the stacks when they are stacked more than four feet high.

(i) Structural steel, poles, pipe, bar stock, and other cylindrical materials, unless racked, shall be stacked and blocked so as to prevent spreading or tilting.

(i) Persons handling reinforcing steel shall wear heavy gloves.

(ii) When bending of reinforcing steel is done on the job, a strong bench shall be provided, set up on even dry ground or a floor for the persons to work on.

(iii) Structural steel shall be carefully piled to prevent danger of members rolling off or the pile toppling over.

(iv) Structural steel shall be kept in low piles, consideration being given to the sequence of use of the members.

(v) Corrugated and flat iron shall be stacked in flat piles, with the piles not more than four feet high and spacing strips shall be placed between each bundle.

(j) Sand, gravel and crushed stone.

(i) Stock piles shall be frequently inspected to prevent their becoming unsafe by continued adding to or withdrawing from the stock.

(ii) If material becomes frozen, it shall not be removed in a manner that would produce an overhang.

[Statutory Authority: RCW 49.17.010, 49.17.040, 49.17.050, 49.17.440, 49.17.060, and 29 C.F.R. 1926, Subpart CC. WSR 12-01-086, § 296-155-325, filed 12/20/11, effective 2/1/12. Statutory Authority: Chapter 49.17 RCW. WSR 95-10-016, § 296-155-325, filed 4/25/95, effective 10/1/95; WSR 94-15-096 (Order 94-07), § 296-155-325, filed 7/20/94, effective 9/20/94. Statutory Authority: RCW 49.17.040 and 49.17.050. WSR 86-03-074 (Order 86-14), § 296-155-325, filed 1/21/86; Order 74-26, § 296-155-325, filed 5/7/74, effective 6/6/74.]

WAC 296-155-335 Disposal of waste materials. (1) Whenever materials are dropped more than twenty feet to any point lying outside the exterior walls of the building, an enclosed chute of wood, or equivalent material, shall be used. For the purpose of this subsection, an enclosed chute is a slide, closed in on all sides, through which material is moved from a high place to a lower one.

(2) When debris is dropped without the use of chutes, the area onto which the material is dropped shall be completely enclosed with barricades not less than forty-two inches high and not less than twenty feet back from the projected edge of the opening above. Signs warning of the hazard of falling materials shall be posted at each level. Removal shall not be permitted in this lower area until debris handling ceases above.

(3) All scrap lumber, waste material, and rubbish shall be removed from the immediate work area as the work progresses.

(4) Disposal of waste material or debris by burning shall comply with local fire regulations.

(5) All solvent waste, oily rags, and flammable liquids shall be kept in fire resistant covered containers until removed from the worksite.

[Statutory Authority: RCW 49.17.040 and 49.17.050. WSR 86-03-074 (Order 86-14), § 296-155-335, filed 1/21/86; Order 74-26, § 296-155-335, filed 5/7/74, effective 6/6/74.]

PART F-1

RIGGING REQUIREMENTS FOR MATERIAL HANDLING

WAC 296-155-336 Rigging requirements for material handling.

[Statutory Authority: RCW 49.17.010, 49.17.040, 49.17.050, 49.17.060 and chapter 49.17 RCW, and 29 C.F.R. 1926, Subpart CC. WSR 13-02-068, § 296-155-336, filed 12/31/12, effective 2/1/13.]

WAC 296-155-33600 Scope. (1) This part applies to material/load handling activities when using slings, rigging hardware, below-the-hook lifting devices when performing construction activities.

(2) This part does not apply to power-operated cranes and derricks when performing construction activities that fall under the scope of Part L of this chapter.

[Statutory Authority: RCW 49.17.010, 49.17.040, 49.17.050, 49.17.060 and chapter 49.17 RCW, and 29 C.F.R. 1926, Subpart CC. WSR 13-02-068, § 296-155-33600, filed 12/31/12, effective 2/1/13.]

WAC 296-155-33605 Definitions. Angle of loading means the acute angle between horizontal and the leg of the rigging, often referred to as horizontal angle. See Figures 7 and 22.

Anti two-block device means a device that, when activated, disengages all crane functions whose movement can cause two-blocking.

Basket hitch means a method of rigging a sling in which the sling is passed around the load and both loop eyes or end fittings are attached to the lifting device.

Below-the-hook lifting device means a device used for attaching loads to a hoist. The device may contain components such as slings, hooks, rigging hardware, and lifting attachments.

Bird caging means the twisting of fiber or wire rope in an isolated area of the rope in the opposite direction of the rope lay, thereby causing it to take on the appearance of a bird cage.

Braided wire rope means a wire rope formed by plaiting component wire ropes.

Bridle wire rope sling means a sling composed of multiple legs with the top ends gathered in a fitting that goes over the lifting hook.

Cable laid endless sling-mechanical joint means a wire rope sling made endless from one continuous length of cable laid rope with the ends joined by one or more metallic fittings.

Cable laid grommet-hand tucked means an endless wire rope sling made from one continuous length of rope formed to make a body composed of six ropes around a rope core. The rope ends are tucked into the body, thus forming the core. No sleeves are used.

Center of gravity means the center of gravity of any object is the point in the object around which its weight is evenly distributed. If you could put a support under that point, you could balance the object on the support.

Choker hitch means a method of rigging a sling in which the sling is passed around the load, then through one loop eye, end fitting, or other device, with the other loop eye or end fitting attached to the lifting device. This hitch can be done with a sliding choker hook or similar device.

Come-a-long means a mechanical device typically consisting of a chain or cable attached at each end that is used to facilitate movement of materials through leverage.

Competent person means one who is capable of identifying existing and predictable hazards in the surroundings or working conditions which are unsanitary, hazardous, or dangerous to employees, and who has authorization to take prompt corrective measures to eliminate them.

Cross rod means a wire used to join spirals of metal mesh to form a complete fabric. See Figure 11.

Design factor means the ratio between nominal or minimum breaking strength and rated load.

Electrical contact means when a person, object, or equipment makes contact or comes close in proximity with an energized conductor or equipment that allows the passage of current.

Fabric (metal mesh) means the flexible portion of the sling exclusive of end fittings consisting of a series of transverse spirals and cross rods.

Fall zone means the area (including, but not limited to, the area directly beneath the load) in which it is reasonably foreseeable that partially or completely suspended materials could fall in the event of an accident.

Flange points means a point of contact between rope and drum flange where the rope changes layers.

Hitch (hitched) means a method of rigging (attaching) a sling temporarily to a load or object for the purpose of lifting.

Hoist means a mechanical device for lifting and lowering loads by winding rope onto or off a drum.

Hoisting means the act of raising, lowering or otherwise moving a load in the air with equipment covered by this stan-

dard. As used in this standard, "hoisting" can be done by means other than wire rope/hoist drum equipment.

Hoisting equipment means a machine for lifting and lowering a load and moving it horizontally. The machine may be fixed or mobile and be driven manually, by power, or by a combination of both.

Hook latch means a mechanical device used to close the throat opening of a hook.

Load is the weight of the object being lifted or lowered, including the weight of the load-attaching equipment such as the load block, ropes, slings, shackles, and any other auxiliary attachment.

Load ratings means a set of rated loads for stipulated hoisting equipment configurations and operating conditions.

Master coupling link means an alloy steel welded coupling link used as an intermediate link to join alloy steel chain to master links.

Master link means forged or welded steel link used to support all members (legs) of an alloy steel chain sling or wire rope sling.

Mechanical coupling link (alloy steel chain) means a nonwelded, mechanically closed link used primarily to attach fittings to alloy steel chain.

Operational controls means levers, switches, pedals and other devices for controlling equipment operation.

Procedures include, but are not limited to: Instructions, diagrams, recommendations, warnings, specifications, protocols, and limitations.

Qualified person means a person who, by possession of a recognized degree, certificate, or professional standing, or who by extensive knowledge, training and experience, successfully demonstrated the ability to solve/resolve problems relating to the subject matter, the work, or the project.

Qualified rigger is a rigger who meets the requirements in WAC 296-155-33700.

Rated capacity means the maximum working load permitted by the manufacturer under specified working conditions. Such working conditions typically include a specific combination of factors such as equipment configuration, radii, boom length, and other parameters of use.

Rotation resistant rope means a type of wire rope construction which reduces the tendency of a rope to rotate about its axis under load. Usually, this consists of an inner system of core strands laid in one direction covered by an outer system of strands laid in the opposite direction.

RPE means a registered professional engineer licensed under RCW 18.43.040(1).

RPSE means a registered professional structural engineer licensed under RCW 18.43.040(1).

Running wire rope is a wire rope that moves over sheaves or drums.

Safety or health standard means a standard adopted under this chapter.

Section means a section of this part, unless otherwise specified.

Sling means an assembly to be used for lifting when connected to a lifting mechanism. The upper portion of the sling is connected to the lifting mechanism and the lower supports the load, as described in this part.

Spiral means a single transverse coil that is the basic element from which metal mesh is fabricated.

Standing wire rope means a supporting wire rope which maintains a constant distance between the points of attachment to the two components connected by the wire rope.

Two blocking means a condition in which a component that is uppermost on the hoist line such as the load block, hook block, overhaul ball, or similar component, comes in contact with the boom tip, fixed upper block or similar component. This binds the system and continued application of power can cause failure of the hoist rope or other component.

Vertical hitch means a method of rigging a sling in which the load is attached to the loop eye or end fitting at one end of the sling and the loop eye or end fitting at the other end is attached to the lifting device. Any hitch less than five degrees from the vertical may be considered a vertical hitch.

Wire rope means a flexible rope constructed by laying steel wires into various patterns of multiwired strands around a core system to produce a helically wound rope.

Working load means the external load applied to the hoisting equipment, including the personnel lifting platform, its contents, and the load attaching equipment, such as lowered load block, shackles, and slings.

[Statutory Authority: RCW 49.17.010, 49.17.040, 49.17.050, 49.17.060 and chapter 49.17 RCW, and 29 C.F.R. 1926, Subpart CC. WSR 13-02-068, § 296-155-33605, filed 12/31/12, effective 2/1/13.]

WAC 296-155-337 Rigging—General requirements.

[Statutory Authority: RCW 49.17.010, 49.17.040, 49.17.050, 49.17.060 and chapter 49.17 RCW, and 29 C.F.R. 1926, Subpart CC. WSR 13-02-068, § 296-155-337, filed 12/31/12, effective 2/1/13.]

WAC 296-155-33700 Rigger qualifications. Riggers must be a qualified person who, by possession of a recognized degree or certificate of professional standing, or who, by extensive knowledge, training, and experience, has successfully demonstrated the ability to solve or resolve problems relating the subject matter. Also has the authorization or authority by the nature of their position to take prompt corrective measures to eliminate them. The person must be knowledgeable in the requirements of this part as applicable to the tasks assigned, including but not limited to:

• "Know and understand of the requirements for slings, rigging hardware, and below-the-hook lifting devices, including their limitations, rigging practices, associated hazards, and inspection requirements;

• "Know and understand the application of the type of hitches used;

• "Know and understand load weight estimation, center of gravity, effect of angle on rigging components, and load turning.

[Statutory Authority: RCW 49.17.010, 49.17.040, 49.17.050, 49.17.060 and chapter 49.17 RCW, and 29 C.F.R. 1926, Subpart CC. WSR 13-02-068, § 296-155-33700, filed 12/31/12, effective 2/1/13.]

WAC 296-155-33705 General requirements. (1) Employers must ensure all rigging activities covered under this part are performed by a qualified rigger or performed under the direction and supervision of a qualified rigger.

(2) All slings in use must meet the applicable requirements for design, inspection, construction, testing, maintenance and operation as prescribed in ASME B30.9-2010.

(3) All rigging hardware in use must meet the applicable requirements for design, inspection, construction, testing, maintenance and operation as prescribed in ASME B30.26-2010.

(4) All rigging gear must be used in accordance with the manufacturer's recommendations or a qualified person.

(5) All below-the-hook lifting devices in use must meet the applicable requirements for design, inspection, construction, testing, maintenance and operation as prescribed in ASME B30.20-2010.

(6) All hooks in use must meet the applicable requirements for design, inspection, construction, testing, maintenance and operation as prescribed in ASME B30.10-2009.

(7) Repair of hooks must be approved by the manufacturer or qualified person and as follows:

(a) Cracks, nicks, and gouges may be repaired by a competent person, all other repairs are done by the manufacturer or a qualified person;

(b) Grind longitudinally, following the contour of the hook;

(c) Do not reduce the dimension of the hook more than ten percent from the original.

(8) Hooks must not be modified by welding and/or drilling unless written approval by the manufacturer has been received.

(9) A qualified person must inspect the rigging equipment before each day or shift and:

(a) Consider the application the equipment will be used for, and determine if it's safe for use;

(b) Remove the equipment from service if using it will create a hazard or meets any of the removal criteria listed in this chapter.

(10) The rated load of the rigging equipment must not be exceeded.

(11) All rigging hardware must be inspected in accordance with Table 1, each day before using. If a daily inspection is not feasible because the hardware is in a semipermanent or inaccessible location, a periodic inspection is allowed instead of daily.

(12) Rigging hardware must be removed from service when it shows any conditions listed in Table 1, or any other hazardous condition.

Table 1
Rigging Hardware Inspection/Removal Criteria

For all hardware, inspect for the following:
Missing or illegible identification.
Indications of heat damage, including weld spatter or arc strikes.
Excessive pitting or corrosion.
Load bearing components that are: • Bent; • Twisted; • Distorted; • Stretched; • Elongated; • Cracked;
For all hardware, inspect for the following:
• Broken.
Excessive nicks or gouges.
10% reduction of the original or catalog dimension at any point.
Excessive thread damage or wear, where applicable.
Evidence of unauthorized welding or modification.
Any other conditions that cause doubt as to the safety of continued use.
On **shackles,** also inspect for incomplete pin engagement.
On **swivels and swivel hoist rings,** check for lack of ability to freely rotate or pivot.
On **compression hardware,** also check for: Unauthorized replacement components; Insufficient number of wire rope clips; Improperly tightened wire rope clips; Damaged wire rope; Indications of wire rope slippage; Improper assembly.
On **swivels,** check for loose or missing nuts, bolts, cotter pins, snap rings, or other fasteners and retaining devices.
On **blocks** check for: – Loose or missing nuts, bolts, cotter pins, snap rings, or other fasteners and retaining devices; – Misalignment or wobble in sheaves; – Excessive sheave groove corrugation or wear.

(13) Any alteration or modification of rigging hardware must be in accordance with the hardware manufacturer or a qualified person and proof load tested to one hundred twenty-five percent. This test must be documented and available upon request.

(14) Welding of rigging hardware is prohibited unless authorized by the manufacturer or an RPE.

(15) Replacement parts must meet or exceed the original rigging hardware manufacturer's specifications.

(16) Rigging hardware selection must have the characteristics suitable for the application and environment where it will be used.

(17) Workers must keep all parts of their body from between the load and any rigging during the lift.

(18) If handling intermodal shipping containers at a construction site, the employer must follow the requirements in chapter 296-56 WAC, longshore, stevedore and waterfront related operations, Part F, Specialized terminals and the guidelines found in International Organization for Standardization (ISO) 3874 - Series 1 Freight Containers, fifth edition - Handling and Securing.

[Statutory Authority: RCW 49.17.010, 49.17.040, 49.17.050, 49.17.060 and chapter 49.17 RCW, and 29 C.F.R. 1926, Subpart CC. WSR 13-02-068, § 296-155-33705, filed 12/31/12, effective 2/1/13.]

WAC 296-155-338 Slings.

[Statutory Authority: RCW 49.17.010, 49.17.040, 49.17.050, 49.17.060 and chapter 49.17 RCW, and 29 C.F.R. 1926, Subpart CC. WSR 13-02-068, § 296-155-338, filed 12/31/12, effective 2/1/13.]

WAC 296-155-33800 Chain slings. (1) Only use chain slings that are made from grade eighty or higher alloy steel chain.

(2) The following requirements must be met if manufacturing your own chain slings:

(a) Have a design factor of four;

(b) Meet the rated load requirements in subsection (9) of this section.

(3) Rate chain slings with the load capacity of the lowest rated component of the sling. For example, if you use fittings that are rated lower than the sling material itself, identify the sling with the lower rated capacity.

(4) Makeshift fittings, such as hooks or links formed from bolts, rods, or other parts are prohibited.

(5) All chain slings must have legible identification information attached to the sling which includes the following information:

(a) Name or trademark of the manufacturer;

(b) Grade;

(c) Nominal chain size;

(d) Number of legs;

(e) Rated loads for the vertical hitch and bridle hitch and the angle upon which it is based;

(f) Length (reach);

(g) Individual sling identification (e.g., serial numbers);

(h) Repairing agency, if the sling was ever repaired.

(6) Inspections.

(a) A qualified person must inspect chain slings before their initial use, according to Table 2, both:

(i) When the sling is new; and

(ii) Whenever a repair, alteration, or modification has been done.

(b) A qualified person must perform a visual inspection for damage, each day or shift the chain sling is used. Immediately remove from service any sling damaged beyond the criteria in Table 2.

(c) A qualified person must perform periodic inspections on chain slings according to Table 2.

(i) Each link and component must be examined individually, taking care to expose and examine all surfaces including the inner link surfaces.

(ii) Remove slings from use:

• If any of the conditions in Table 2 are found;

• When they have been exposed to temperatures above one thousand degrees Fahrenheit.

(d) A written record of the most recent periodic inspection must be kept, including the condition of the sling.

Note: An external code mark on the sling is an acceptable means of recording the inspection as long as the code can be traced back to a record.

Table 2
Chain Sling Inspection/Removal Criteria

Inspect alloy steel chain slings for the following conditions:	Perform inspections:
• Missing or illegible sling identification. • Cracks or breaks. • Excessive nicks, gouges, or wear beyond that allowed in Table 3, Minimum Allowable Thickness at Any Point on a Link.	• At least once a year for slings in normal service, which means use within the rated load.
• Stretched chain links or components.	• At least once a quarter for slings in severe service, which involves abnormal operating conditions.
• Bent, twisted or deformed chain links or components.	• As recommended by a qualified person for slings in special service, which is anything other than normal or severe.
• Evidence of heat damage. • Excessive pitting or corrosion. • Inability of chain or components to hinge (articulate) freely. • Weld spatter. • Hooks that have any of the following conditions: – Any visibly apparent bend or twist from the plane of the unbent hook; – Any distortion causing an increase in throat opening of five percent, not to exceed one-quarter inch, or as otherwise recommended by the manufacturer; – Wear exceeding ten percent of the original section dimension of the hook or its load pin, or as otherwise recommended by the manufacturer;	

Inspect alloy steel chain slings for the following conditions:	Perform inspections:
– A self-locking mechanism that does not lock (if applicable); – Any latch that does not close the hook's throat (if applicable). • Other visible damage that raises doubt about the safety of the sling.	

Table 3
Minimum Allowable Thickness at Any Point on a Link

Nominal chain or coupling link size		Minimum allowable thickness at any point on the link	
Inches	Millimeters	Inches	Millimeters
7/32	5.5	0.189	4.80
9/32	7	0.239	6.07
5/16	8	0.273	6.93
3/8	10	0.342	8.69
1/2	13	0.443	11.26
5/8	16	0.546	13.87
3/4	20	0.687	17.45
7/8	22	0.750	19.05
1	26	0.887	22.53
1 1/4	32	1.091	27.71

(7) Repair, alterations, or modifications.

(a) Chain slings must be repaired as follows:

(i) Slings must only be repaired by the manufacturer or a qualified person;

(ii) Chain used for sling repair must be alloy steel chain manufactured and tested in accordance with ASTM A 391/A 391M for Grade 80 chain and ASTM A 973/A 973M for Grade 100 chain;

(iii) Components for alloy steel chain slings must be manufactured and tested in accordance with ASTM A 952/A 952M;

(iv) The use of mechanical coupling links within the body of a chain sling to connect two pieces of chain is prohibited;

(v) Replace cracked, broken, or bent chain links or components instead of repairing them.

(b) The sling must be marked to show the repairing agency.

(c) Repaired slings must be proof tested according to the requirements in subsection (8) of this section. If only replacing components of the sling, and the components were individually proof tested, the sling does not have to be tested as a whole.

Note: For additional requirements relating to repair and modification see WAC 296-155-33705(9).

(8) Proof test chain slings. Prior to initial use, all new and repaired chain and components of an alloy steel chain sling, either individually or as an assembly must be proof tested by the sling manufacturer or a qualified person. Follow the requirements in Table 4, Chain Sling Proof Load Requirements.

Table 4
Chain Sling Proof Load Requirements

When proof testing this type of equipment:	Then proof load:
• Single or multiple leg slings. • Components attached to single legs.	Each leg and component to at least two times the single leg vertical hitch rated load.
• Master links for double leg bridle slings. • Single basket slings. • Master coupling links connected to two legs.	To at least four times the single leg vertical hitch rated load.
• Master links for triple and quadruple leg bridle slings. • Double basket bridle sling.	To at least six times the single leg vertical hitch rated load.

(9) Chain slings rated loads, the term "working load limit" is commonly used to describe rated load.

Note: Rated loads are based on the following factors:
- Strength of sling materials;
- Design factor;
- Type of hitch;
- Angle of loading.

(a) Chain slings must be used within the rated loads shown in Tables 1 through 4 of ASME B30.9-2010. For angles that are not shown in these tables, either use the rated load for the next lower angle or one calculated by a qualified person.

(b) The use of horizontal sling angles less than thirty degrees are prohibited, unless recommended by the sling manufacturer or a qualified person. See Figure 1, Multiple-Leg Bridle Sling Hitch.

(c) Rated loads must be verified for slings used in a choker meet the values shown in the above referenced tables provided that the angle of choke is one hundred twenty degrees or greater. See Figure 2, Single-Leg Choker Hitch.

(d) Rated loads for angles of choke less than one hundred twenty degrees must be determined by the manufacturer or a qualified person.

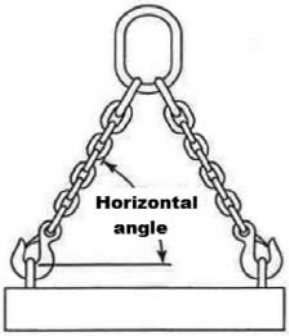

Figure 1
Multiple-Leg Bridle Sling Hitch

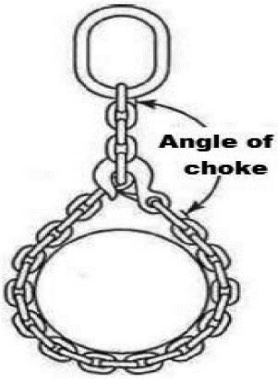

Figure 2
Single-Leg Choker Hitch

(10) Use of chain slings.

(a) Shorten or adjust slings using only methods approved by the manufacturer or a qualified person.

(b) Slings must not be shortened or lengthened by knotting or twisting.

(c) Twisting and kinking must be avoided.

(d) Hitch slings in a way that provides control of the load.

(e) Balance the load in slings used in a basket hitch to prevent it from slipping.

(f) Slings must be protected from sharp edges of the load. See Figure 3.

(g) The sling must be prevented from snagging anything during the lift, with or without load.

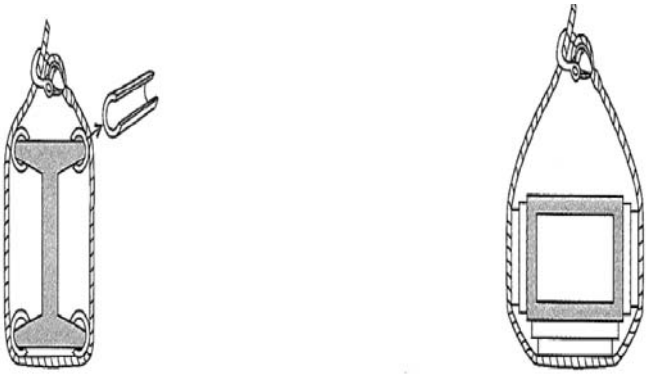

Softeners can be made from split pipe, padding or blocking

Figure 3
Softeners

[Statutory Authority: RCW 49.17.010, 49.17.040, 49.17.050, 49.17.060 and chapter 49.17 RCW, and 29 C.F.R. 1926, Subpart CC. WSR 13-02-068, § 296-155-33800, filed 12/31/12, effective 2/1/13.]

WAC 296-155-33805 Wire rope slings. (1) Manufacturing wire rope slings.

(a) Wire rope slings must be made from new or unused regular lay wire rope. The wire rope must be manufactured and tested in accordance with ASTM A 1023-02 and ASTM A 586.

(b) The following fabrication methods must be used to make wire rope slings:

(i) Hand splicing;

(ii) Turnback eye;

(iii) Return loop;

(iv) Flemish eye mechanical splicing;

(v) Poured or swaged socketing.

(c) Wire rope slings must have a design factor of five.

(d) Wire rope slings must meet the requirements in Table 6.

(e) Using any of the following when making wire rope slings is prohibited:

(i) Rotation resistant wire rope;

(ii) Malleable cast iron clips;

(iii) Knots;

(iv) Wire rope clips, unless:

• The application of the sling prevents using prefabricated slings;

• The specific application is designed by a qualified person.

(f) Wire rope clips, if used, must be installed and maintained in accordance with the recommendations of the clip manufacturer or a qualified person, or in accordance with the provisions of ASME B30.26-2010.

(g) Slings made with wire rope clips must not be used as a choker hitch.

Note: If using wire rope clips under these conditions, follow the guidance given in Table 5.

Table 5

Number, Torque Values, and Turn Back Requirements for U-Bolt Wire Rope Clips				Number, Torque Values, and Turn Back Requirements for Double Saddle (Fist Grip) Wire Rope Clips			
Clip & Wire Rope Size (inches)	Min. No. of Clips	Amount of Rope Turn Back in Inches	*Torque in Ft. Lbs.	Clip & Wire Rope Size (inches)	Min. No. of Clips	Amount of Rope Turn Back in Inches	*Torque in Ft. Lbs.
1/8	2	3-1/4	4.5	3/16-1/4	2	4	30
3/16	2	3-3/4	7.5	5/16	2	5	30
1/4	2	4-3/4	15	3/8	2	5-1/4	45
5/16	2	5-1/4	30	7/16	2	6-1/2	65
3/8	2	6-1/2	45	1/2	3	11	65
7/16	2	7	65	9/16	3	12-3/4	130
1/2	3	11-1/2	65	5/8	3	13-1/2	130
9/16	3	12	95	3/4	4	16	225
5/8	3	12	95	7/8	4	26	225
3/4	4	18	130	1	5	37	225
7/8	4	19	225	1-1/8	5	41	360
1	5	26	225	1-1/4	6	55	360
1-1/8	6	34	225	1-3/8	6	62	500
1-1/4	7	44	360	1-1/2	7	78	500
1-3/8	7	44	360				
1-1/2	8	54	360				
1-5/8	8	58	430				
1-3/4	8	61	590				
2	8	71	750				
2-1/4	8	73	750				
2-1/2	9	84	750				
2-3/4	10	100	750				
3	10	106	1200				
3-1/2	12	149	1200				

* The tightening torque values shown are based upon the threads being clean, dry, and free of lubrication.

Table 6
Wire Rope Sling Configuration Requirements

If you have:	Then you need:
• Slings made of rope with 6x19 and 6x36 classification. • Cable laid slings.	A minimum clear length of rope ten times the rope diameter between splices, sleeves, or end fittings (see Figure 4, Minimum Sling Length) unless approved by a qualified person.
• Braided slings.	A minimum clear length of rope forty times the component rope diameter between the loops or end fittings (see Figure 5, Minimum Braided Sling Length) unless approved by a qualified person.
• Grommets and endless slings.	A minimum circumferential length of ninety-six times the body diameter of the grommet or endless sling unless approved by a qualified person.

If you have:	Then you need:
• Other configurations.	Specific limitation data provided by a qualified person. These slings must meet all other requirements of ASME B30.9-2010.

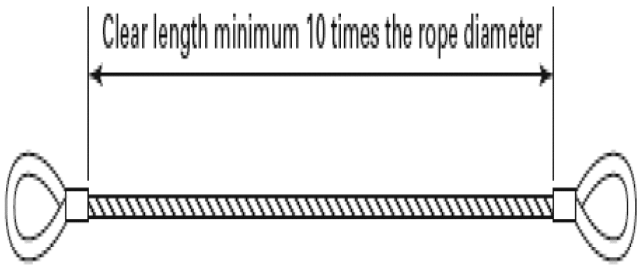

Figure 4 Minimum Sling Length
For rope with 6x19 and 6x36 classification or Cable Laid Slings

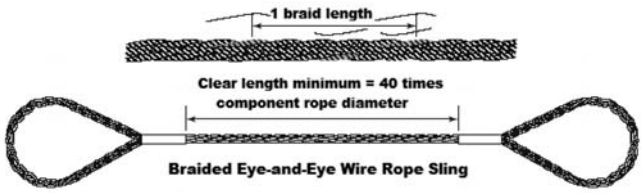

Figure 5
Minimum Braided Sling Length

(2) Wire rope sling fittings.

(a) Fittings must be used according to the fitting manufacturer's directions.

(b) Rate slings with the load capacity of the lowest rated component of the sling. For example, if you use fittings that are rated lower than the sling material itself, identify the sling with the lower rated capacity.

(c) Weld any end attachments, except covers to thimbles, before assembling the sling.

(3) Identification information. All wire rope slings must have legible identification information attached to the sling which includes the information below, see sample tag in Figure 6. For slings in use that are manufactured before the effective date of this rule, the information below must be added before use or at the time the periodic inspection is completed.

(a) Name or trademark of the manufacturer.

(b) Diameter or size.

(c) Rated loads for the types of hitches used and the angle that the load is based on.

(d) Number of legs, if more than one.

(e) Repairing agency, if the sling is ever repaired.

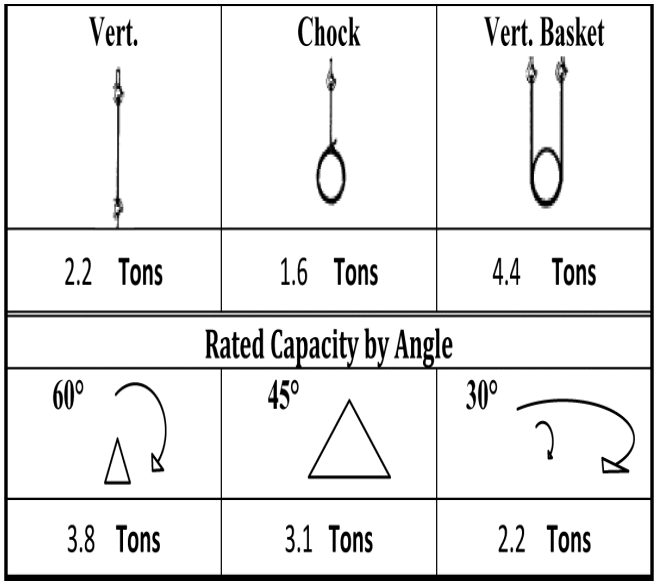

Figure 6
Sample Wire Rope Sling ID Tag

Note: Sample tag for a 1/2" single-leg sling 6x19 or 6x36 classification, extra improved plow steel (EIPS) grade fiber core (FC) wire rope with a mechanical splice (ton = 2,000 lb).

(4) Inspection.

(a) A qualified person must inspect wire rope slings before their initial use, according to Table 7, both:

(i) When the sling is new; and

(ii) Whenever a repair, alteration, or modification has been done.

(b) A qualified person must perform a visual inspection for damage, each day or shift the wire rope sling is used:

(i) Include all fastenings and attachments;

(ii) Immediately remove any sling from service that is damaged beyond the criteria listed in Table 7; or

(iii) Remove fiber core wire rope slings that have been exposed to temperatures higher than one hundred eighty degrees Fahrenheit.

(c) A qualified person must perform periodic inspections on wire rope slings according to Table 7.

(5) Repair, alterations, or modifications.

(a) Repair wire rope slings as follows:

(i) Make sure slings are only repaired by the sling manufacturer or a qualified person;

(ii) Mark the sling to show the repairing agency;

(iii) Do not repair wire rope used in slings, wire rope must be replaced. Only end attachments and fittings can be repaired on a wire rope sling.

(b) Modification or alterations to end attachments or fittings must be considered as repairs and must conform to all other provisions of this part.

(c) Proof load test repaired slings according to the requirements in subsection (6) of this section.

(6) Proof load tests. Make sure the sling manufacturer or a qualified person proof load tests the following slings before initial use, according to Table 8:

(a) All repaired slings;

(b) All slings incorporating previously used or welded fittings;

(c) For single- or multiple-leg slings and endless slings, each leg must be proof loaded according to the requirements listed in Table 8 based on fabrication method. The proof load test must not exceed fifty percent of the component ropes' or structural strands' minimum breaking strength;

Table 7
Wire Rope Sling Inspection and Removal Criteria

Inspect wire rope slings for the following conditions:	Perform inspections:
• Missing or illegible sling identification. • Severe localized abrasion or scraping. • Kinking, crushing, birdcaging, or any other condition resulting in damage to the rope structure.	• At least once a year for slings in normal service.
• Evidence of heat damage.	• At least once a quarter for slings in severe service.
• Severe corrosion of the rope, end attachments, or fittings.	• As recommended by a qualified person for slings in special service.
• End attachments that are cracked, deformed, or worn to the extent that the strength of the sling is substantially affected. • Broken wires: – For strand-laid and single-part slings, ten randomly distributed broken wires in one rope lay, or five broken wires in one strand in one rope lay; – For cable-laid slings, twenty broken wires per lay; – For six-part braided slings, twenty broken wires per braid; – For eight-part braided slings, forty broken wires per braid. • Hooks that have any of the following conditions: – Any visibly apparent bend or twist from the plane of the unbent hook; – Any distortion causing an increase in throat opening five percent, not to exceed one-quarter inch, or as recommended by the manufacturer; – Wear exceeding ten percent, of the original section dimension of the hook or its load pin, or as recommended by the manufacturer; – Self-locking mechanism that does not lock. • Other visible damage that raises doubt about the safety of the sling.	

Table 8
Wire Rope Sling Proof Load Test Requirements

Type of equipment:	Proof load test:
• Mechanical splice slings.	Each leg to at least two times the single leg vertical hitch rated load.
• Swaged socket and poured socket slings.	Each leg to at least two times, but not more than two and one-half times, the single-leg vertical hitch rated load.
Note: For mechanical splice, swaged socket and poured socket slings follow the rope manufacturer's recommendations for proof load testing provided that it is within the above-specified proof load range, including (c) of this subsection.	
• Hand tucked slings, if proof load tested.	To at least one, but not more than one and one-quarter, times the single-leg vertical hitch rated load.

(d) The proof load test for components (fittings) attached to single legs must meet the requirements in (c) of this subsection;

(e) Proof load testing for master links must be in accordance with Table 9.

Table 9
Proof Load Test for Master Links on Wire Rope Slings

• Master links for two-leg bridle slings.	To at least four times the single-leg vertical hitch rated load.
• Master links for three-leg bridle slings.	To at least six times the single-leg vertical hitch rated load.
• Master links for four-leg bridle slings.	To at least eight times the single-leg vertical hitch rated load.

(7) Rated load. The term "rated capacity" is commonly used to describe rated load.

Note: Rated loads are based on the following factors:
- Strength of sling material;
- Design factor;
- Type of hitch;
- Angle of loading (see Figure 7, Angle of Loading);
- Diameter of curvature over which the sling is used (D/*d*) (see Figure 8, D/*d* ratio);
- Fabrication efficiency.

(a) Wire rope slings must be used within the rated loads shown in Tables 7 through 15 in ASME B30.9-2010. For angles that are not shown in these tables, either use the rated load for the next lower angle or have a qualified person calculate the rated load.

(b) Prohibit the use of horizontal sling angles less than thirty degrees unless recommended by the sling manufacturer or a qualified person. See Figure 7.

(c) Rated loads for slings used in a choker hitch must conform to the values shown in the above referenced tables, provided that the angle of choke is one hundred twenty degrees or greater. See Figure 9 and Table 10, Angle of Choke.

(d) Use either Figure 9 and Table 10, the manufacturer, or a qualified person to determine the rated load if the angle of choke in a choker hitch is less than one hundred twenty degrees.

(i) Inspect the entire length of the sling including splices, end attachments, and fittings.

(ii) Remove slings from use if any of the conditions in Table 7 are found.

(iii) Keep a record of the most recent periodic inspection available, including the condition of the sling.

Note: An external code mark on the sling is an acceptable means of recording the inspection as long as the code can be traced back to a record.

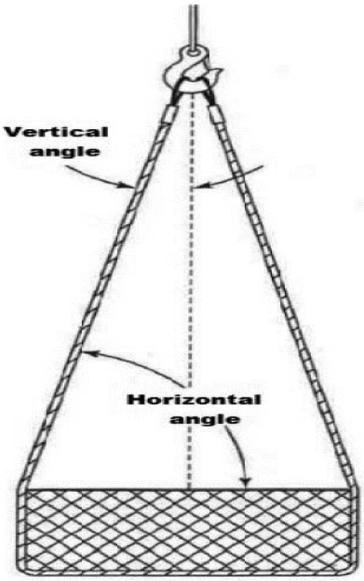

Figure 7
Angle of Loading

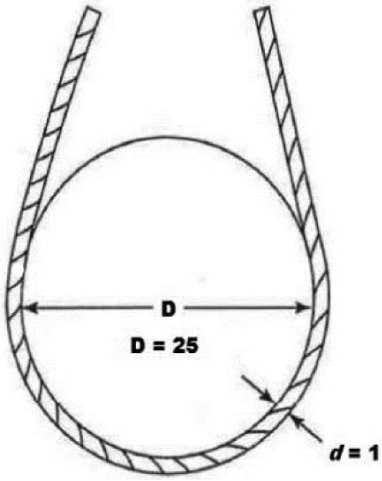

Figure 8
D/*d* Ratio

Note: When D is 25 times the component rope diameter (*d*) the D/*d* ratio is expressed as 25/1.

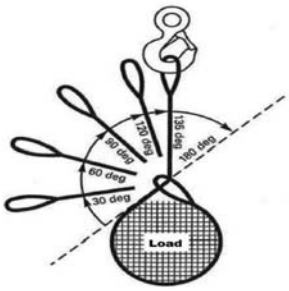

Figure 9
Angle of Choke

Table 10
Angle of Choke

Angle of Choke, deg.	Rated Capacity, %
Over 120	100
90 - 120	87
60 - 89	74
30 - 59	62
0 - 29	49

Note: Percent of sling rated capacity in a choker hitch.

(8) Use of wire rope slings.

(a) Hitch the slings in a way that provides control of the load.

(b) Shorten or adjust slings using only the methods approved by the manufacturer or qualified person.

• Do **not** shorten or lengthen by knotting, twisting, or by wire rope clips.

(c) Keep all parts of the human body from between the sling and the load, crane, or hoist hook.

(d) Prohibit all of the following:

(i) Intentional shock loading;

(ii) Avoid twisting and kinking.

(e) Decrease the rated load of the sling when D/*d* ratios (Figure 8) smaller than twenty-five to one. Consult the sling manufacturer for specific data or refer to the *Wire Rope Sling User's Manual* (wire rope technical board).

(f) Follow Table 11, Use of Wire Rope Slings or Clips, when using any of the identified wire rope slings or clips.

(g) Slings in contact with edges, corners, or protrusions must be protected with a material of sufficient strength, thickness, and construction to prevent damage to the sling. See Figure 3.

Table 11
Use of Wire Rope Slings or Clips

If you are using:	Then:
Single leg slings used with multiple-leg slings.	Make sure the rating shown is not exceeded in any leg of the multiple-leg sling.
Hand tucked slings are used in a single leg vertical lift.	Do not allow the sling or load to rotate.
Slings made with wire rope clips.	Must not be used as a choker hitch.
U-bolt wire rope clips.	Use only U-bolt wire rope clips that are made of drop-forged steel.
	Follow Table 5 for the number and spacing of the clips.
	Apply the U-bolt so the "U" section is in contact with the dead end of the rope (see Figure 10, Installation and Loading).

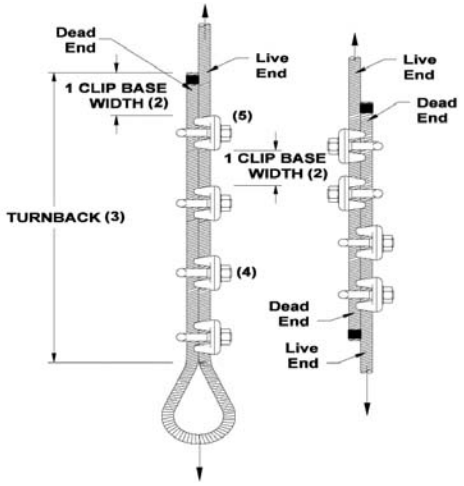

Figure 10

Installation and Loading
Proper Installation Requires
• Correct number of clips for wire rope size
• Correct spacing of clips
• Correct turnback length
• Correct torque on nuts
• Correct orientation of saddle on live end

[Statutory Authority: RCW 49.17.010, 49.17.040, 49.17.050, 49.17.060 and chapter 49.17 RCW, and 29 C.F.R. 1926, Subpart CC. WSR 13-02-068, § 296-155-33805, filed 12/31/12, effective 2/1/13.]

WAC 296-155-33810 Metal mesh slings. (1) Identification information on metal mesh slings. Make sure all slings have legible identification information permanently attached to the sling which includes all of the following information:

(a) Name or trademark of the manufacturer;

(b) Rated loads for the types of hitches used, and the angle they're based on;

(c) Width and gauge;

(d) Number of legs, if more than one;

(e) Individual sling identification (e.g., serial numbers);

(f) Repairing agency, if the sling has ever been repaired.

(2) Inspection.

(a) A qualified person must inspect metal mesh slings before their initial use, according to Table 12, both:

(i) When the sling is new; and

(ii) Whenever a repair, alteration, or modification has been done.

(b) A qualified person must perform a visual inspection for damage, each day or shift the metal mesh sling is used. Immediately remove from service any sling damaged beyond the criteria in Table 12.

(c) A qualified person must perform periodic inspections on metal mesh slings according to Table 12.

(i) Inspect the entire length, including splices, end attachments, and fittings.

(ii) Remove slings from use if any of the conditions in Table 12 are found.

(iii) Keep a record of the most recent periodic inspection available, including the condition of the sling.

Note: An external code mark on the sling is an acceptable means of recording the inspection as long as the code can be traced back to a record.

Table 12
Metal Mesh Sling Inspection Table

Inspect metal mesh slings for conditions such as the following:	Perform inspections:
• Missing or illegible sling identification; • Broken welds along the sling edge; • Broken brazed joints along the sling edge; • Broken wire in any part of the mesh; • Reduction in wire diameter of: – Twenty-five percent due to abrasion; – Fifteen percent due to corrosion; • Lack of flexibility due to the distortion of the mesh; • Distortion of the choker fitting so the depth of the slot is increased by more than ten percent; • Distortion of either end fitting so the width of the eye opening is decreased by more than ten percent; • A fifteen percent reduction of the original cross-sectional area of any point around the hook opening of the end fitting; • Visible distortion of either end fitting out of its plane; • Cracked end fitting; • Slings in which the spirals are locked or without free articulation; • Fittings that are pitted, corroded, cracked, bent, twisted, gouged, or broken; • Other visible damage that raises doubt about the safety of the sling.	• At least once a year for slings in normal service; • At least once a quarter for slings in severe service; • As recommended by a qualified person for slings in special service.

(3) Repair, alteration, or modifications. Repair metal mesh slings as follows:

(a) Make sure slings are only repaired by the manufacturer or a qualified person;

(b) Straightening of spiral or cross rods, or forcing a spiral into position is prohibited (see Figure 11);

(c) Mark the sling to show the repairing agency;

(d) Replace cracked, broken, bent or damaged metal mesh or components instead of repairing them;

(e) Proof load test repaired slings according to subsection (4) of this section.

(4) Proof load testing.

(a) Make sure the sling manufacturer or a qualified person proof load tests all new and repaired metal mesh slings before initial use;

(b) Use a proof load test that is a minimum of two times the vertical hitch rated load.

(5) Rated load.

Note: Rated loads are based on the following factors:
• Strength of sling material;
• Design factor;
• Type of hitch;
• Angle of loading.

(a) Metal mesh slings must be used within the rated loads shown in Table 7 in ASME B30.9-2010. For angles that are not shown in these tables, use either the rated load for the next lower angle or one calculated by a qualified person.

(b) Rate slings with the load capacity of the lowest rated component of the sling. For example, if fittings are rated lower than the sling material itself, identify the sling with the lower rated capacity.

(c) The use of horizontal sling angles less than thirty degrees is prohibited, unless recommended by the sling manufacturer or a qualified person.

(d) Rated loads for slings used in a choker hitch must conform to the values shown in the above referenced table, provided that the angle of choke is one hundred twenty degrees or greater.

(e) Have the manufacturer or a qualified person determine the rated load if the angle of choke in a choker hitch is less than one hundred twenty degrees.

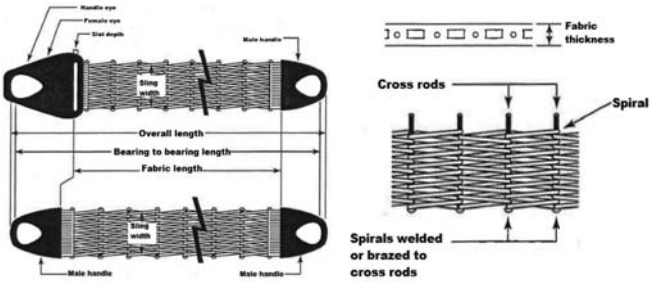

Figure 11
Metal Mesh Sling

(6) Use of metal mesh slings.

(a) Use metal mesh slings safely by doing all of the following:

(i) Shorten or adjust slings using only the methods approved by the manufacturer or a qualified person;

(ii) Sling legs must not be kinked;

(iii) Hitch slings in a way that provides control of the load.

(b) Keep all parts of the human body from between the sling and the load, crane, or hoist hook.

(c) Prohibit the following:

(i) The use of metal mesh slings as bridles on suspended personnel platforms;

(ii) Intentional shock loading;

(iii) Straightening a spiral or cross rod or forcing a spiral into position;

(iv) Avoid twisting and kinking.

Note: Slings in contact with edges, corners, or protrusions should be protected with a material of sufficient strength, thickness, and construction to prevent damage. See Figure 3.

[Statutory Authority: RCW 49.17.010, 49.17.040, 49.17.050, 49.17.060 and chapter 49.17 RCW, and 29 C.F.R. 1926, Subpart CC. WSR 13-02-068, § 296-155-33810, filed 12/31/12, effective 2/1/13.]

WAC 296-155-33815 Synthetic rope slings. (1) Identification. Verify all slings have legible identification information attached to the sling which includes the following information:

(a) Name or trademark of the manufacturer;

(b) Manufacturer's code or stock number;

(c) Type of fiber material;

(d) Rated loads for the types of hitches used, and the angle that the load is based on;

(e) Number of legs, if more than one;

(f) Repairing agency, if the sling has ever been repaired.

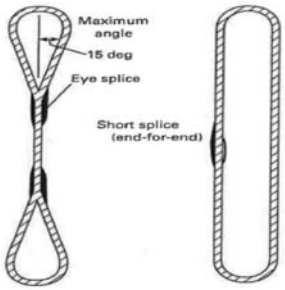

Figure 12
Synthetic Fiber Rope Slings

(2) Inspection.

(a) A qualified person must inspect synthetic fiber rope slings before their initial use, according to Table 13, both:

(i) When the sling is new; and

(ii) Whenever a repair, alteration, or modification has been done.

(b) A qualified person must perform a visual inspection for damage, each day or shift the synthetic fiber rope sling is used. Immediately remove any sling from service that is damaged beyond the criteria listed in Table 13.

(c) A qualified person must perform periodic inspections on synthetic fiber rope slings, according to Table 13.

(i) Examine each sling and component individually, taking care to expose and examine all surfaces.

(ii) Inspect the entire length including splices, end attachments, and fittings.

(iii) Remove slings from use if any of the conditions in Table 13 are found.

(iv) Keep a record of the most recent periodic inspection available, including the condition of the sling.

Note: An external code mark on the sling is an acceptable means of recording the inspection as long as the code can be traced back to a record.

Table 13
Synthetic Rope Sling Inspection and Removal Criteria

Inspect synthetic rope slings for the following conditions:	Perform inspections:
• Missing or illegible sling identification; • Cuts, gouges, or areas of extensive fiber breakage along the length; • Abraded areas on the rope; • Damage that is estimated to have reduced the effective diameter of the rope by more than ten percent;	• At least once a year for slings in normal service; • At least once a quarter for slings in severe service;

Inspect synthetic rope slings for the following conditions:	Perform inspections:
• Uniform fiber breakage along the major part of the length of the rope in the sling such that the entire rope appears covered with fuzz or whiskers; • Inside the rope, fiber breakage, fused or melted fiber (observed by prying or twisting to open the strands) involving damage estimated at ten percent of the fiber in any strand or the rope as a whole; • Discoloration, brittle fibers, and hard or stiff areas that may indicate chemical, ultraviolet or heat damage; • Dirt and grit in the interior of the rope structure that is deemed excessive; • Foreign matter that has permeated the rope, making it difficult to handle and attracting and holding grit; • Kinks or distortion in the rope structure, particularly if caused by forcibly pulling on loops (known as hockles); • Melted, hard, or charred areas that affect more than ten percent of the diameter of the rope or affect several adjacent strands along the length that affect more than ten percent of strand diameters; • Poor condition of thimbles or other components manifested by corrosion, cracks, distortion, sharp edges, or localized wear; • Hooks that have any of the following conditions:	• As recommended by a qualified person for slings in special service.

Inspect synthetic rope slings for the following conditions:	Perform inspections:
– Any visibly apparent bend or twist from the plane of the unbent hook; – Any distortion causing an increase in throat opening five percent, not to exceed one-quarter inch, or as recommended by the manufacturer; – Wear exceeding ten percent, of the original section dimension of the hook or its load pin, or as recommended by the manufacturer; – Self-locking mechanism that does not lock. • Other visible damage that raises doubt about the safety of the sling.	

(3) Repair, alteration, or modifications. Meet the following requirements when repairing synthetic rope slings:

(a) Synthetic rope slings must only be repaired by the manufacturer or a qualified person;

(b) Mark the sling to show the repairing agency;

(c) Use components that meet the requirements of this part for sling repair;

(d) Do not repair slings by knotting or resplicing existing sling ropes;

(e) Proof load test repaired slings according to the requirements in subsection (4) of this section.

(4) Proof load test. The sling manufacturer or a qualified person must proof load test repaired slings and slings incorporating previously used or welded fittings before initial use, according to Table 14:

Table 14
Synthetic Rope Sling Proof Load Requirements

Type of equipment:	Proof load test:
• Single leg slings; • Multiple leg slings; • Endless slings; • Fittings attached to single legs.	To a minimum of two times the single leg vertical hitch rated load.

Type of equipment:	Proof load test:
Master links for two-leg bridle slings.	To a minimum of four times the single leg vertical hitch rated load.
Master links for three-leg bridle slings.	To a minimum of six times the single leg vertical hitch rated load.
Master links for four-leg bridle slings.	To a minimum of eight times the single leg vertical hitch rated load.

(5) Rated load.

Note: Rated loads are based on the following factors:
- Strength of the sling material;
- Design factor;
- Type of hitch (see Figure 13, Hitch Types for Synthetic Rope Slings);
- Angle of loading (see Figure 7, Angle of Loading);
- Diameter of curvature over which the sling is used (see Figure 8, D/*d* Ratio).

(a) Synthetic rope slings must be used within the rated loads shown in Tables 18 and 19 in ASME B30.9-2010. For angles that are not shown in these tables, either use the rated load for the next lower angle or one calculated by a qualified person.

(b) Rate slings with the load capacity of the lowest rated component of the sling. For example, if you use fittings that are rated lower than the sling material itself, identify the sling with the lower-rated capacity.

(c) The use of horizontal sling angles less than thirty degrees is prohibited, unless recommended by the sling manufacturer or a qualified person. (See Figure 7.)

(d) Rated loads for slings used in a choker hitch must conform to the values shown in the above referenced tables, provided that the angle of choke is one hundred twenty degrees or greater.

(e) Use Figure 9, the manufacturer, or a qualified person to determine the rated load if the angle of choke in a choker hitch is less than one hundred twenty degrees.

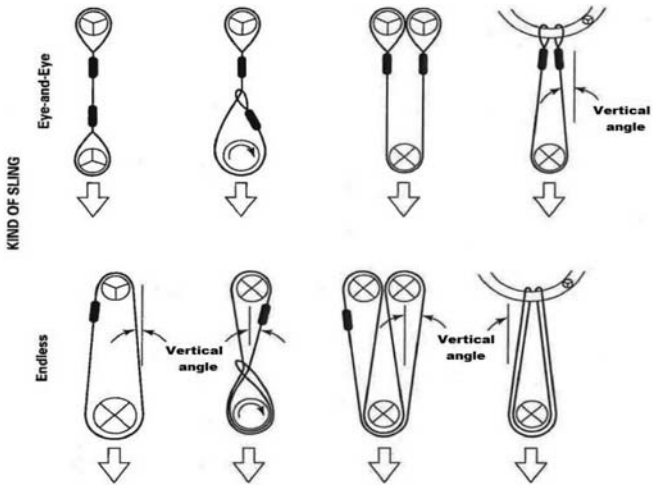

Figure 13
Hitch Types for Synthetic Rope

The symbols below represent load or support in contact with the rope sling. The contact surface diameter divided by the rope diameter is designated D/*d* ratio as described in Figure 8.

Represents a contact surface which must have a diameter of curvature at least double the diameter of the rope from which the sling is made.

Represents a contact surface which must have a diameter of curvature at least eight times the diameter of the rope.

Represents a load in choker hitch and illustrates the rotary force on the load and/or the slippage of the rope in contact with the load. Diameter of curvature of load surface must be at least double the diameter of the rope.

Note: Legs five degrees or less from vertical may be considered vertical. For slings more than five degrees vertical, the actual angle must be used.

(6) Use of synthetic ropes.

(a) Use synthetic rope slings safely by doing all of the following:

(i) Shorten or adjust slings only with methods approved by the manufacturer or qualified person;

(ii) Slings must not be shortened or lengthened by knotting or twisting;

(iii) Hitch slings in a way that provides control of the load;

(iv) Slings in contact with edges, corners, protrusions, or abrasive surfaces must be protected with a material of sufficient strength, thickness, and construction to prevent damage, see Figure 3;

(v) Do not allow the sling or load to rotate when hand - tucked slings are used in a single leg vertical lift application; and

(vi) Keep all parts of the human body from between the sling and the load, crane, or hoist hook.

(b) All of the following is prohibited:

(i) Intentional shock loading; and

(ii) Twisting or kinking.

[Statutory Authority: RCW 49.17.010, 49.17.040, 49.17.050, 49.17.060 and chapter 49.17 RCW, and 29 C.F.R. 1926, Subpart CC. WSR 13-02-068, § 296-155-33815, filed 12/31/12, effective 2/1/13.]

WAC 296-155-33820 Synthetic webbing slings. (1) Identification. Make sure all slings have legible identification information permanently attached to the sling which includes the following information:

(a) Name or trademark of the manufacturer;

(b) Manufacturer's code or stock number;

(c) Rated loads for the types of hitches used, and the angle that the load is based on;

(d) Type of synthetic web material;

(e) Number of legs, if more than one;

(f) Repairing agency, if the sling is ever repaired.

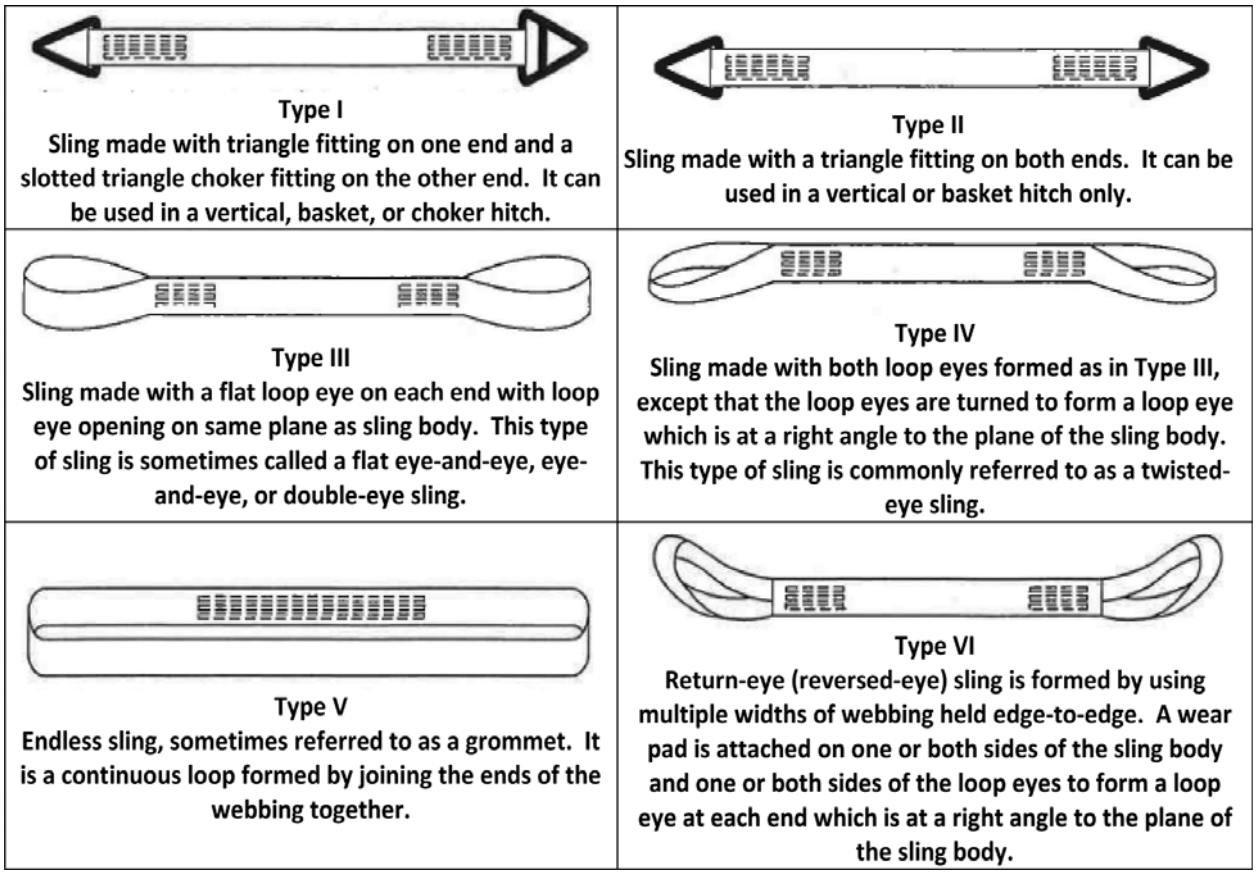

Figure 14
Synthetic Webbing Slings

(2) Inspection.

(a) A qualified person must inspect synthetic webbing slings before their initial use, according to Table 14:

(i) When the sling is new; and

(ii) Whenever a repair, alteration, or modification has been done.

(b) A qualified person must perform a visual inspection for damage, each day or shift the synthetic webbing sling is used. Immediately remove from service any sling that is damaged beyond the criteria listed in Table 15.

(c) A qualified person must perform periodic inspections on synthetic webbing slings, according to Table 15.

(i) Examine each sling and component individually, taking care to expose and examine all surfaces.

(ii) Remove slings from use if any of the conditions in Table 15 are found.

(iii) Keep a written record of the most recent periodic inspection available, including the condition of the sling.

Note: An external code mark on the sling is an acceptable means of recording the inspection as long as the code can be traced back to a record.

Table 15
Synthetic Webbing Sling Inspection

Inspect synthetic webbing slings for the following conditions:	Perform inspections:
• Missing or illegible sling identification; • Acid or caustic burns; • Melting or charring on any part of the sling; • Holes, tears, cuts or snags; • Broken or worn stitching in load bearing splices; • Excessive abrasive wear; • Knots in any part of the sling;	• At least once a year for slings in normal service; • At least once a quarter for slings in severe service; • As recommended by a qualified person for slings in special service.

Inspect synthetic webbing slings for the following conditions:	Perform inspections:
• Discoloration, brittle fibers, and hard or stiff areas that may indicate chemical or ultraviolet/sunlight damage; • Fittings that are pitted, corroded, cracked, bent, twisted, gouged or broken; • Hooks that have any of the following conditions: – Any visibly apparent bend or twist from the plane of the unbent hook; – Any distortion causing an increase in throat opening five percent, not to exceed one-quarter inch, or as recommended by the manufacturer; – Wear exceeding ten percent, of the original section dimension of the hook or its load pin, or as recommended by the manufacturer; – Self-locking mechanism that does not lock. • Other visible damage that causes doubt about the safety of continued use of the sling.	

(3) Repair, alterations, or modifications.

(a) Meet the following requirements when repairing synthetic webbing slings:

(i) Slings are only to be repaired by the manufacturer or a qualified person;

(ii) Temporary repairs are prohibited;

(iii) Mark the sling to show the repairing agency;

(iv) Components used for sling repair must meet the requirements of this part;

(v) Cracked, broken, melted, or otherwise damaged webbing material or fittings other than hooks must not be repaired;

(vi) Load bearing splices must not be repaired;

(b) Proof load test repaired slings according to the requirements in subsection (4) of this section.

(4) Proof load test. The sling manufacturer or a qualified person must proof load test repaired slings and slings that have been altered or modified before initial use according to Table 16:

Table 16
Synthetic Webbing Sling Proof Test Requirements

Type of equipment:	Proof load test:
• Single leg slings; • Multiple leg slings; • Endless slings; • Fittings attached to single legs.	To a minimum of two times the single leg vertical hitch rated load.
Master links for two-leg bridle slings.	To a minimum of four times the single leg vertical hitch rated load.
Master links for three-leg bridle slings.	To a minimum of six times the single leg vertical hitch rated load.
Master links for four-leg bridle slings.	To a minimum of eight times the single leg vertical hitch rated load.

(5) Rated loads.

Note: Rated loads are based on the following factors:
- Strength of the material;
- Design factor;
- Type of hitch;
- Angle of loading (see Figure 7, Angle of Loading);
- Fabrication efficiency;
- Diameter of curvature over which the sling is used.

(a) Synthetic web slings must be used within the rated loads shown in Tables 20 through 24 in ASME B30.9-2010. For angles that are not shown in these tables, use either the rated load for the next lower angle or one calculated by a qualified person.

(b) Rate slings with the load capacity of the lowest rated component of the sling. For example, if you use fittings that are rated lower than the sling material itself, identify the sling with the lower-rated capacity.

(c) The use of horizontal sling angles less than thirty degrees is prohibited, unless recommended by the sling manufacturer or a qualified person. (See Figure 7.)

(d) Use Figure 9, Angle of Choke, the manufacturer, or a qualified person to determine the rated load if the angle of choke in a choker hitch is less than one hundred twenty degrees.

(e) Rated loads for slings used in a choker hitch must conform to the values shown in the above referenced tables, provided that the angle of choke is one hundred twenty degrees or greater. (See Figure 9.)

(6) Use of synthetic webbing slings.

(a) Use synthetic webbing slings safely by meeting all of the following requirements:

(i) Shorten or adjust slings only with methods approved by the manufacturer or qualified person;

(ii) Slings must not be shortened or lengthened by knotting or twisting;

(iii) Hitch slings in a way that provides control of the load;

(iv) Protect slings with material of sufficient strength, thickness, and construction to prevent damage from sharp

edges, corners, protrusions, or abrasive surfaces. See Figure 3;

(v) Keep all parts of the human body from between the sling and the load, crane, or hoist hook.

(b) Intentional shock loading is prohibited.

[Statutory Authority: RCW 49.17.010, 49.17.040, 49.17.050, 49.17.060 and chapter 49.17 RCW, and 29 C.F.R. 1926, Subpart CC. WSR 13-02-068, § 296-155-33820, filed 12/31/12, effective 2/1/13.]

WAC 296-155-33825 Synthetic roundslings. (1) Identification. All synthetic roundslings must be marked with the following information:

(a) Name or trademark of the manufacturer;

(b) Manufacturer's code or stock number;

(c) Core material;

(d) Cover material if different from core material;

(e) Rated loads for the types of hitches used, and the angle that the load is based on;

(f) Number of legs, if more than one;

(g) Repairing agency, if the sling is ever repaired.

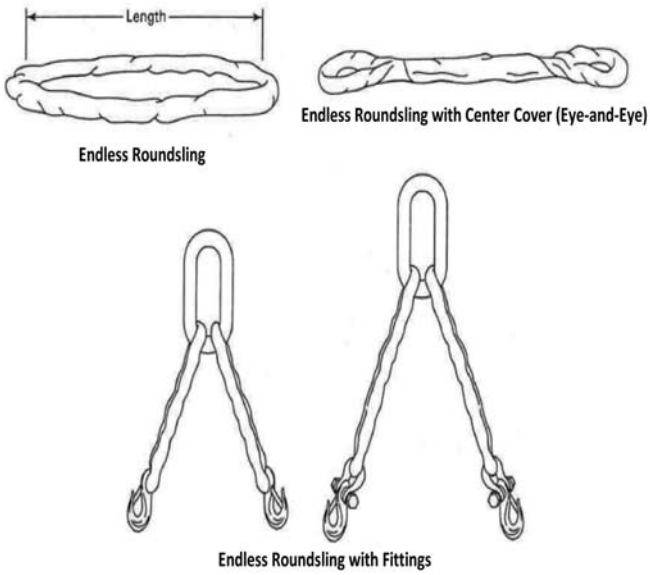

Figure 15
Synthetic Roundslings

(2) Inspection.

(a) A qualified person must inspect synthetic roundslings before their initial use, according to Table 17, both:

(i) When the sling is new; and

(ii) Whenever a repair, alteration, or modification has been done.

(b) A qualified person must perform a visual inspection for damage, each day or shift the synthetic roundsling is used. Immediately remove from service any sling that is damaged beyond the criteria listed in Table 17.

(c) A qualified person must perform periodic inspections on synthetic roundslings, according to Table 17.

(i) Examine each sling and component individually, taking care to expose and examine all surfaces.

(ii) Remove slings from use if any of the conditions in Table 17 are found.

(iii) Keep a written record of the most recent periodic inspection available, including the condition of the sling.

Note: An external code mark on the sling is an acceptable means of recording the inspection as long as the code can be traced back to a record.

Table 17
Synthetic Roundsling Inspection and Removal Criteria

Inspect synthetic roundslings for conditions such as the following:	Perform inspections:
• Missing or illegible sling identification. • Acid or caustic burns. • Evidence of heat damage. • Holes, tears, cuts, abrasive wear or snags that expose the core yarns. • Broken or damaged core yarns. • Weld spatter that exposes core yarns.	
• Roundslings that are knotted.	• At least once a year for slings in normal service.
• Fittings that are pitted, corroded, cracked, bent, twisted, gouged or broken.	• At least once a quarter for slings in severe service.
• Hooks that have any of the following conditions: – Any visibly apparent bend or twist from the plane of the unbent hook. – Any distortion causing an increase in throat opening five percent, not to exceed one-quarter inch, or as recommended by the manufacturer. – Wear exceeding ten percent, of the original section dimension of the hook or its load pin, or as recommended by the manufacturer. – Self-locking mechanism that does not lock.	• As recommended by a qualified person for slings in special service.

Inspect synthetic roundslings for conditions such as the following:	Perform inspections:
• Other visible damage that causes doubt about the safety of continued use of the sling.	

(3) Repair, alterations, or modifications.

(a) Meet the following requirements when repairing synthetic roundslings:

(i) Only the manufacturer or a qualified person can repair slings;

(ii) Mark the sling to show the repairing agency;

(iii) Only use components that meet the requirements of this rule to repair slings;

(iv) Replace cracked, broken, or bent fittings other than hooks; do not repair them.

(b) Both of the following are prohibited:

(i) Temporary repairs of roundslings or fittings; and

(ii) The repair of load bearing yarns.

Proof load test repaired slings according to the requirements in subsection (4) of this section.

(4) Proof load tests. The sling manufacturer or a qualified person must proof load test repaired slings and slings that have been altered or modified before initial use, according to Table 18:

Table 18
Synthetic Roundslings Proof Test Requirements

Type of equipment:	Proof load test:
• Single leg slings. • Multiple leg slings. • Endless slings. • Fittings attached to single legs.	To a minimum of two times the single leg vertical hitch rated load.
Master links for two-leg bridle slings.	To a minimum of four times the single leg vertical hitch rated load.
Master links for three-leg bridle slings.	To a minimum of six times the single leg vertical hitch rated load.
Master links for four-leg bridle slings.	To a minimum of eight times the single leg vertical hitch rated load.

(5) Rated loads.

Note: Rated loads are based on the following factors:
- Strength of the material.
- Design factor.
- Type of hitch.
- Angle of loading. (See Figure 7, Angle of Loading.)
- Diameter of curvature over which the sling is used.

(a) Synthetic roundslings must be used within the rated loads shown in Table 25 in ASME B30.9-2010. For angles that are not shown in these tables, either use the rated load for the next lower angle or one calculated by a qualified person.

(b) Rate slings with the load capacity of the lowest rated component of the sling. For example, if you use fittings that are rated lower than the sling material itself, identify the sling with the lower rated capacity.

(c) Prohibit the use of horizontal sling angles less than thirty degrees unless recommended by the sling manufacturer or a qualified person.

(d) Use Figure 7, Angle of Choke, the manufacturer, or a qualified person to determine the rated load if the angle of choke in a choker hitch is less than one hundred twenty degrees.

(e) Rated loads for slings used in a choker hitch must conform to the values shown in the above referenced Table 10 provided that the angle of choke is one hundred twenty degrees or greater. (See Figure 7.)

(6) Use of synthetic roundslings.

(a) Use methods approved by the manufacturer or qualified person to shorten or adjust slings. Slings must not be shortened or lengthened by knotting or twisting.

(b) Hitch slings in a way that provides control of the load.

(c) Protect slings with material of sufficient strength, thickness, and construction to prevent damage from sharp edges, corners, protrusions, or abrasive surfaces. (See Figure 3.)

(d) Keep all parts of the human body from between the sling and the load, crane, or hoist hook.

(e) Intentional shock loading is prohibited.

[Statutory Authority: RCW 49.17.010, 49.17.040, 49.17.050, 49.17.060 and chapter 49.17 RCW, and 29 C.F.R. 1926, Subpart CC. WSR 13-02-068, § 296-155-33825, filed 12/31/12, effective 2/1/13.]

WAC 296-155-339 Rigging hardware and lifting devices other than slings and rigging hardware.

[Statutory Authority: RCW 49.17.010, 49.17.040, 49.17.050, 49.17.060 and chapter 49.17 RCW, and 29 C.F.R. 1926, Subpart CC. WSR 13-02-068, § 296-155-339, filed 12/31/12, effective 2/1/13.]

WAC 296-155-33900 General requirements. (1) Inspections.

(a) A qualified person must perform an inspection on all hardware according to Table 19, each day before using. If a daily inspection is not feasible because the hardware is in a semipermanent or inaccessible location, a periodic inspection is allowed instead of daily.

(b) Hardware must be removed from service when it shows any conditions listed in Table 19, or any other hazardous condition.

Table 19
Hardware Inspection

For all hardware, inspect for the following:
• Missing or illegible identification. • For shackles, missing or illegible manufacturer's name or trademark and/or rated load identification.
• Indications of heat damage, including weld spatter or arc strikes.
• Excessive pitting or corrosion.
• Load bearing components that are:

For all hardware, inspect for the following:
– Bent. – Twisted. – Distorted. – Stretched. – Elongated. – Cracked. – Broken.
• Excessive nicks or gouges. For riggings blocks, excessive nicks, gouges and wear.
• Ten percent reduction of the original or catalog dimension at any point. For shackles, this includes at any point around the body or pin.
• Excessive thread damage or wear, where applicable.
• Evidence of unauthorized welding or modification.
• Any other conditions that cause doubt as to the safety of continued use.
• On **shackles,** also inspect for incomplete pin engagement.
• On **swivels and swivel hoist rings,** check for lack of ability to freely rotate or pivot.
• On **compression hardware,** also check for: – Unauthorized replacement components. – Insufficient number of wire rope clips. – Improperly tightened wire rope clips. – Damaged wire rope. – Indications of wire rope slippage. – Improper assembly.
• On **swivels,** check for loose or missing nuts, bolts, cotter pins, snap rings, or other fasteners and retaining devices.
• On **blocks** check for: – Loose or missing nuts, bolts, cotter pins, snap rings, or other fasteners and retaining devices. – Misalignment or wobble in sheaves. – Excessive sheave groove corrugation or wear.

(2) Repairs, alterations, or modifications.

(a) Rigging hardware must be repaired, altered or modified according to the hardware manufacturer or a qualified person.

(b) Welding of hardware is prohibited unless authorized by the manufacturer.

(c) Replacement parts must meet or exceed the original rigging hardware manufacturer's specifications.

(3) Hardware use.

(a) Hardware must be selected with the characteristics suitable for the application and environment where it will be used.

(b) The rated load of the hardware must not be exceeded.

(c) At least one of the workers using rigging hardware must meet the requirements of WAC 296-155-33700.

[Statutory Authority: RCW 49.17.010, 49.17.040, 49.17.050, 49.17.060 and chapter 49.17 RCW, and 29 C.F.R. 1926, Subpart CC. WSR 13-02-068, § 296-155-33900, filed 12/31/12, effective 2/1/13.]

WAC 296-155-33905 Shackles. (1) Pins must be connected to the choking eye of the sling when a shackle is used in a choker hitch.

(2) Screw pins must be:

(a) Fully engaged, with the shoulder in contact with the shackle body (see Figure 16, Typical Shackle Components).

(b) Rigged in a way that keeps the pin from unscrewing while in use.

(c) Secured from rotation or loosening if used for long-term installations.

(3) Cotter pins must be kept in good working condition.

(4) If the shackle is side loaded, reduce the rated load, according to the recommendations of the manufacturer or a qualified person (see Figure 17, Side Loading).

Note: See Figure 18, Shackle Types, for examples of types of shackles covered by this rule.

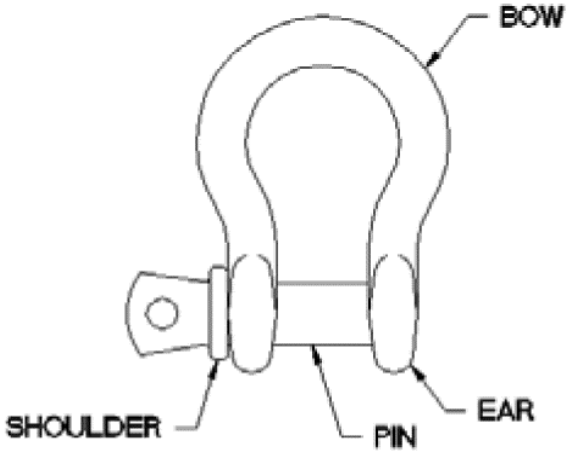

Figure 16
Typical Shackle Components

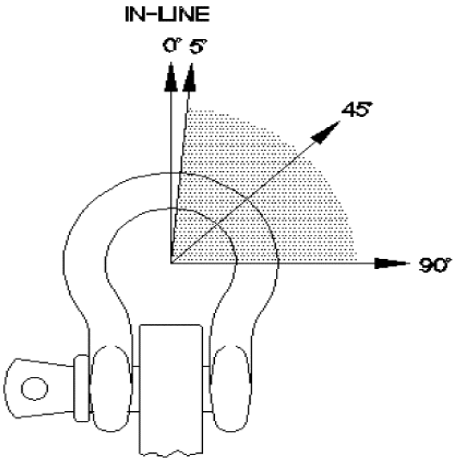

Figure 17
Side Loading

Side Loading Angle, deg.	% Rated Load Reduction
In-line (0) to 5	None
6 to 45	30%
46 to 90	50%
Over 90	Not permitted unless authorized by manufacturer or qualified person

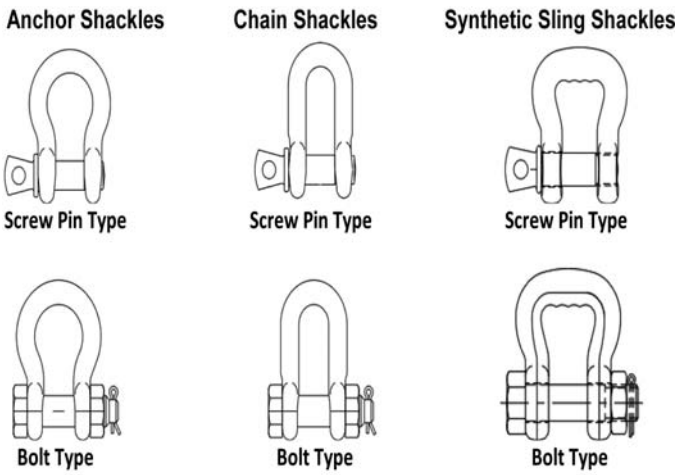

Figure 18
Shackle Types

[Statutory Authority: RCW 49.17.010, 49.17.040, 49.17.050, 49.17.060 and chapter 49.17 RCW, and 29 C.F.R. 1926, Subpart CC. WSR 13-02-068, § 296-155-33905, filed 12/31/12, effective 2/1/13.]

WAC 296-155-33910 Adjustable hardware. (1) Turnbuckles. Follow these rigging practices for turnbuckles:

(a) Locking nuts, if used, must be compatible with the threads of the turnbuckle end. (See Figure 19, Turnbuckle Types.)

(b) For long-term installations, secure turnbuckles in a way that prevents unscrewing.

(c) Turnbuckle end fitting threads must be fully engaged in the body threads.

(d) Components, including pins, bolts, nuts, or cotter pins used with jaw ends, must be in good working condition prior to use.

Notes:
- See Figure 19 for types of turnbuckles covered by this rule.
- Pipe bodies conceal the length of thread engagement. Verify full engagement before loading. (See Figure 19.)

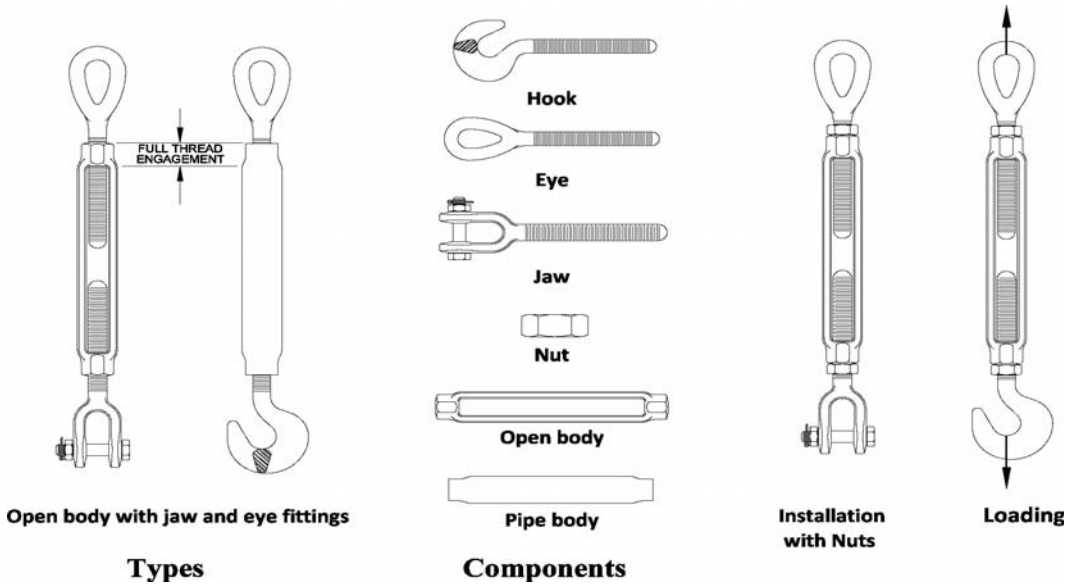

Figure 19
Turnbuckle Types

(2) Eyebolts. Follow these rigging practices for eyebolts:

(a) Eyebolts not shouldered to the load must only be used for in-line loads. (See Figure 20, Eyebolts.)

(b) Only shoulder eyebolts must be used for angular lifting.

(i) The shoulder must be flush and securely tightened against the load.

(ii) The working load limit (WLL) must be reduced as shown in Figure 31.

(iii) For angular lifts, the plane of the eye must be aligned with the direction of loading. If needed, flat washers can be used under the shoulder to position the plane of the eye. (See Figure 20.)

(c) When using eyebolts in a tapped blind hole, the effective thread length must be at least one and one-half times the diameter of the bolt for engagement in steel. (See Figure 20.) For other engagements, or engagements in other materials, contact the eyebolt manufacturer or a qualified person.

(d) When using eyebolts in a tapped through-hole of less than one diameter thickness, a nut must be used under the load, and must be fully engaged and tightened securely against the load. (See Figure 20.)

(e) When eyebolts are used in an untapped through-hole, the nut under the load must be fully engaged. If the eyebolt is not shouldered to the load, a second nut on top of the load should be used if possible. (See Figure 20.)

Note: See Figure 20 for examples of eyebolts covered by this rule.

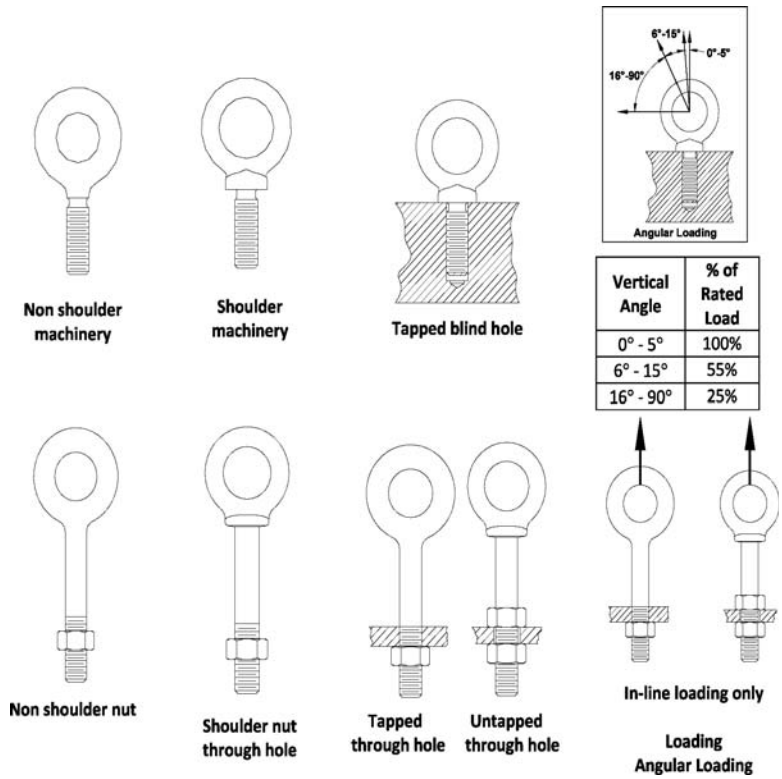

Vertical Angle	% of Rated Load
0° - 5°	100%
6° - 15°	55%
16° - 90°	25%

Figure 20
Eyebolts

(3) Eye nuts. Follow these rigging practices for eye nuts (see Figure 21, Eye Nuts):

(a) The threads of eye nuts must be fully engaged;

(b) Eye nuts must only be used for in-line loads;

(c) Components must be in good working condition prior to use.

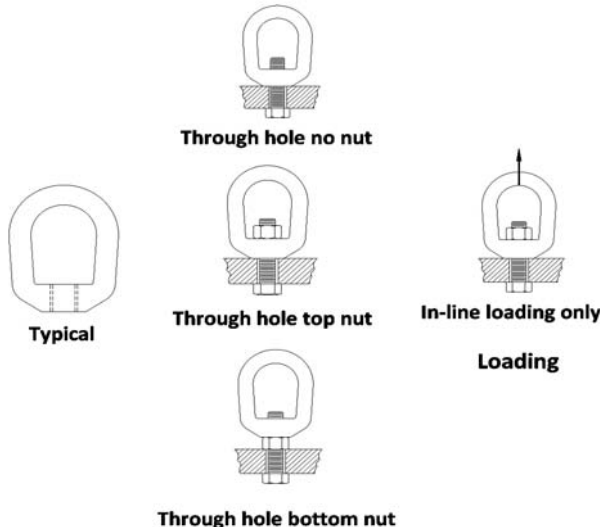

Figure 21
Eye Nuts

(4) Swivel hoist rings. Follow these rigging practices for swivel hoist rings:

(a) The swivel hoist ring working load limit (WLL) must meet or exceed the anticipated angular rigging tension. (See Figure 22, Angle of Loading.)

(b) Swivel hoist rings must be tightened to the torque specifications of the manufacturer.

(c) The swivel hoist ring must be free to rotate and pivot without interference during lifting. (See Figure 23, Swivel Hoist Rings.)

(d) The load applied to the swivel hoist ring must be centered in the bail to prevent side loading.

(e) Any attached lifting component must be narrower than the inside width of the bail to avoid spreading.

(f) When using swivel hoist rings in a threaded-hole, the effective thread length must be one and one-half times the diameter of the bolt for steel. (See Figure 23.) For other thread engagements or engagement in other materials, contact the manufacturer or a qualified person.

(g) When using swivel hoist rings in a through-hole application, a nut and washer must be used. A washer and nut must be in accordance with the manufacturer's recommendations. The nut must be fully engaged. (See Figure 23.)

(h) The bushing flange must fully contact the load surface. (See Figure 23.)

(i) Spacers or washers must not be used between the bushing flange and the mounting surface of the load being lifted.

Note: See Figure 23 for examples of swivel hoist rings covered by this rule.

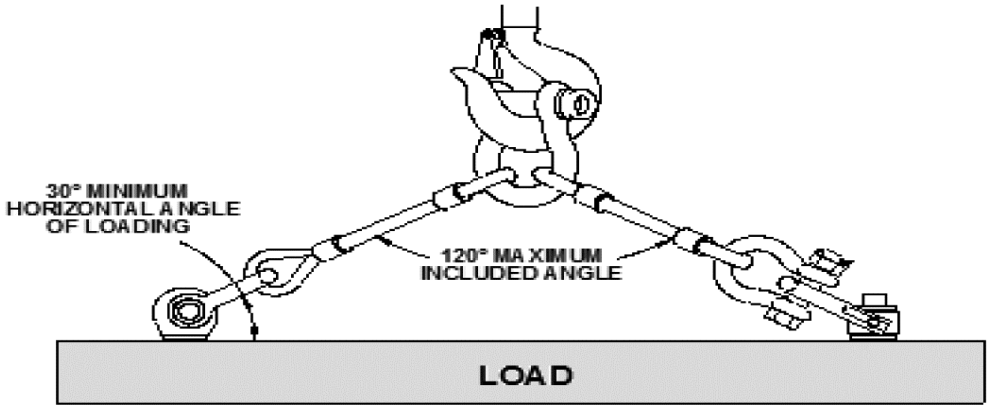

Figure 22
Angle of Loading (Adjustable Hardware)

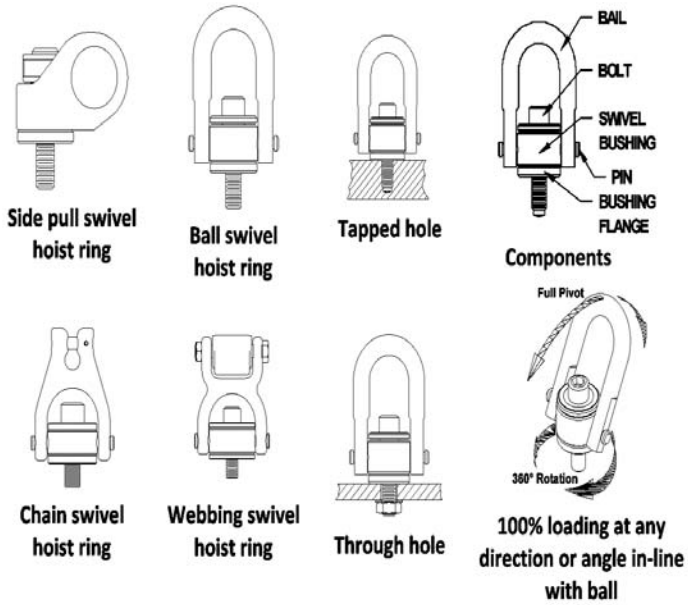

Figure 23
Swivel Hoist Rings

[Statutory Authority: RCW 49.17.010, 49.17.040, 49.17.050, 49.17.060 and chapter 49.17 RCW, and 29 C.F.R. 1926, Subpart CC. WSR 13-02-068, § 296-155-33910, filed 12/31/12, effective 2/1/13.]

WAC 296-155-33915 Compression hardware. (1) Wire rope clips. Follow these assembly requirements for wire rope clips:

(a) Before installing a wire rope clip on plastic coated or plastic impregnated wire rope, the wire rope clip manufacturer, wire rope manufacturer or a qualified person must be consulted.

(b) For U-bolt clips used to create end terminations, the saddle must be placed on the live end of the wire rope, with the U-bolt on the dead end side. (See Figure 24, Wire Rope Clips.)

(c) The assembly must be tested by loading the connection to at least the expected working load. After unloading, retighten the wire rope clips to the torque recommended by the manufacturer or a qualified person.

(d) Follow the manufacturer's recommendations for the minimum number of clips, spacing and turn-back measurements, and to the recommended torque values. In the absence of the manufacturer's recommendations follow Table 5.

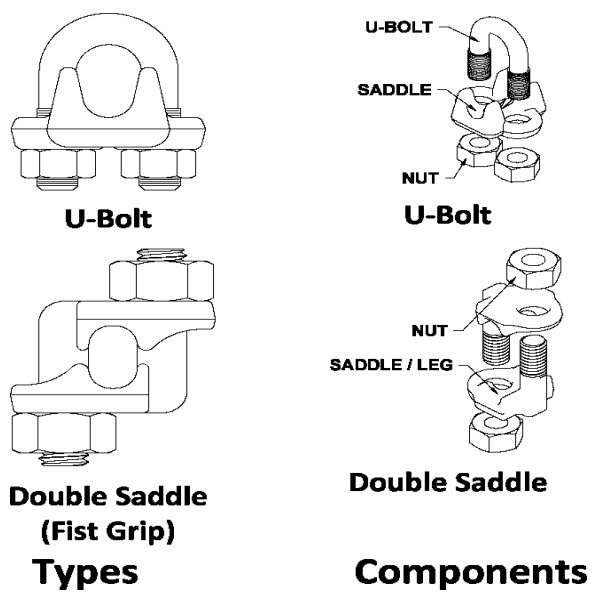

Figure 24
Wire Rope Clips

(2) Wedge sockets. Follow these assembly requirements for wedge sockets:

(a) Wedge sockets must be assembled as recommended by the manufacturer or a qualified person.

(b) Before installing a wedge socket on plastic coated or plastic impregnated wire rope the wedge socket manufacturer, wire rope manufacturer or a qualified person must be consulted.

(c) The assembler must match the proper wedge with the socket for the wire rope to be installed. Wedges must not be interchanged between different manufacturers' sockets or models.

(d) The live end of the wire rope in the wedge socket cavity must be in alignment with the socket's pin. (See Figure 25, Wedge Sockets.)

(e) The length of the dead end tail of the wire rope must be as required by the manufacturer or a qualified person.

(f) The tail of the dead end of the wire rope extending beyond the wedge socket must be secured as recommended by the wedge socket manufacturer or a qualified person.

(g) The dead end of the wire rope must not be secured to the live end of the wire rope in a way that restricts the movement of the live end. (See Figure 25.)

(h) After assembly the connection must be loaded to fully seat the wedge before use.

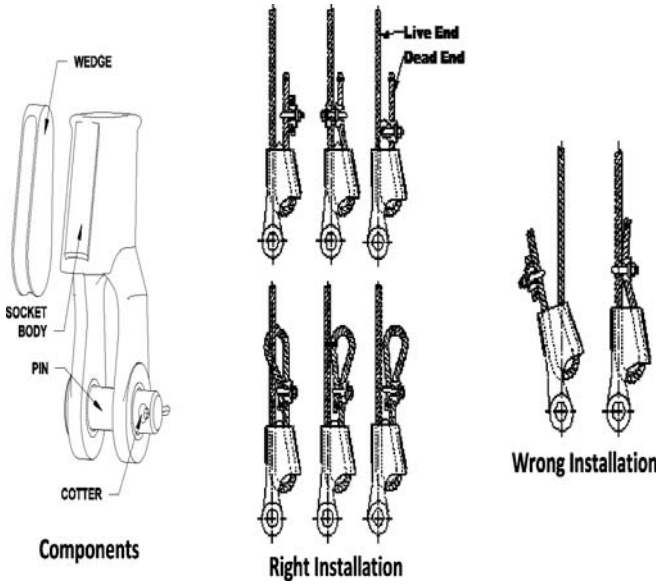

Figure 25
Wedge Sockets

[Statutory Authority: RCW 49.17.010, 49.17.040, 49.17.050, 49.17.060 and chapter 49.17 RCW, and 29 C.F.R. 1926, Subpart CC. WSR 13-02-068, § 296-155-33915, filed 12/31/12, effective 2/1/13.]

WAC 296-155-33920 Links, rings, and swivels. (1) Follow these rigging practices for links and rings:

(a) The link or ring must be of the proper shape and size to make sure it seats properly in the hook or lifting device.

(b) Multiple slings or rigging hardware gathered in a link or ring must not exceed a one hundred twenty degree included angle. (See Figure 22, Angle of Loading.)

Note: See Figure 26, Links and Rings, for examples of links and rings covered by this rule.

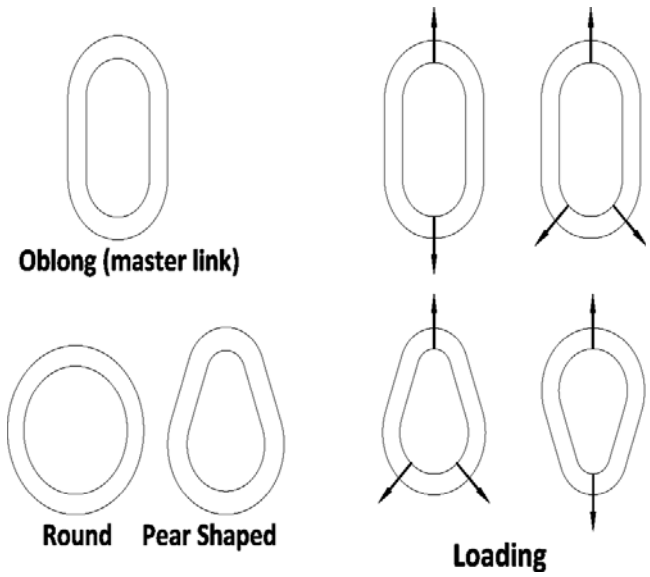

Figure 26
Links and Rings

(2) Follow these rigging practices for swivels:

(a) Swivels must only be used on in-line loads. (See Figure 27, Swivels.)

Note: Swivels are positioning hardware, and are not intended to be rotated under load.

(b) Swivels must be of the proper shape and size to make sure it seats correctly in the hook or lifting device.

(c) All swivel components must be kept in good working condition.

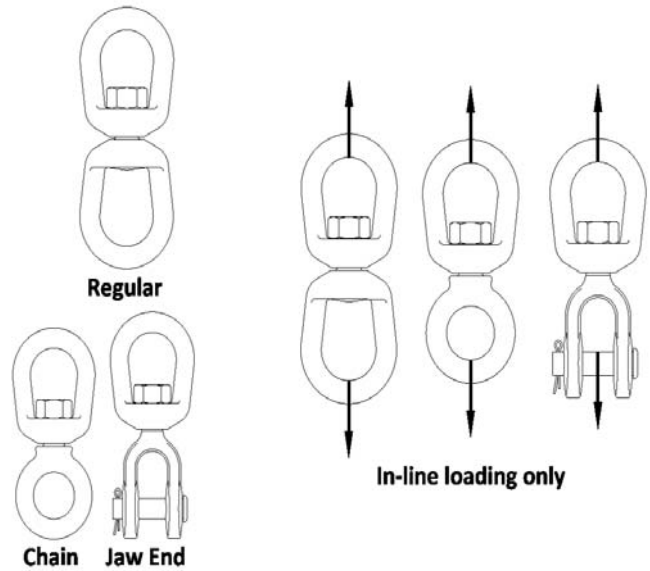

Figure 27
Swivels

[Statutory Authority: RCW 49.17.010, 49.17.040, 49.17.050, 49.17.060 and chapter 49.17 RCW, and 29 C.F.R. 1926, Subpart CC. WSR 13-02-068, § 296-155-33920, filed 12/31/12, effective 2/1/13.]

WAC 296-155-33925 Rigging blocks. (1) The rigging block components must be fully engaged, with all fasteners and retaining devices in place and in good working order before use.

(2) The rope must be in the sheave groove when the rigging block begins to take load.

(3) The load line multiplied by the block load factor must not exceed the rated load of the rigging block. (See Figure 28, Block Load Factor Multipliers.)

(4) Load line fittings must not contact the rigging block sheave(s).

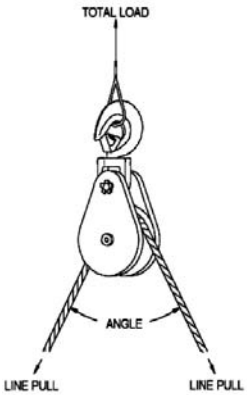

Tackle Block Angles

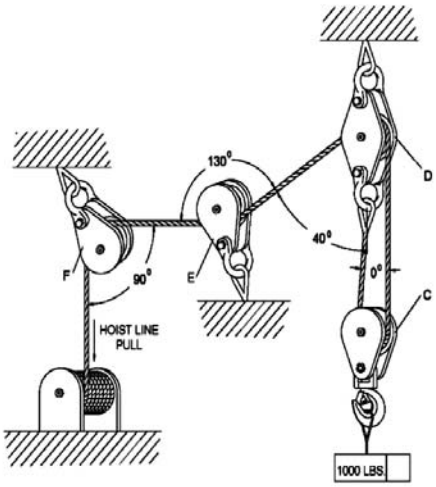

Utility Block Angles

Angle	Factor	Angle	Factor
0°	2.00	100°	1.29
10°	1.99	110°	1.15
20°	1.97	120°	1.00
30°	1.93	130°	.84
40°	1.87	135°	.76
45°	1.84	140°	.68
50°	1.81	150°	.52
60°	1.73	160°	.35
70°	1.64	170°	.17
80°	1.53	180°	.00
90°	1.41	—	—

Block Load = Line Pull X Multiplier Factor

Example: Load = 1,000 lb

Line Pull: 1,000 lb ÷ 2 = 500 lb

Load Block "C" = 500 lb x 2 = 1,000 lb

(line pull x factor for 0 deg. angle)

Load Block "D" = 500 lb x 1.87 + 500 lb = 1,435 lb

(line pull x factor for 40 deg. angle + dead-end load)

Load Block "E" = 500 lb x 0.84 = 420 lb

(line pull x factor for 130 deg. angle)

Load Block "F" = 500 lb x 1.41 = 705 lb

(line pull x factor for 90 deg. angle)

Figure 28
Block Load Factor Multipliers

[Statutory Authority: RCW 49.17.010, 49.17.040, 49.17.050, 49.17.060 and chapter 49.17 RCW, and 29 C.F.R. 1926, Subpart CC. WSR 13-02-068, § 296-155-33925, filed 12/31/12, effective 2/1/13.]

WAC 296-155-340 Lifting devices other than slings and rigging hardware.

[Statutory Authority: RCW 49.17.010, 49.17.040, 49.17.050, 49.17.060 and chapter 49.17 RCW, and 29 C.F.R. 1926, Subpart CC. WSR 13-02-068, § 296-155-340, filed 12/31/12, effective 2/1/13.]

WAC 296-155-34005 Structural and mechanical lifters. (1) Structural and mechanical lifting devices must be constructed in accordance with ASME B30.20-2010, Below-the-Hook Lifting Devices.

(2) The rated load of the lifting device must be legibly marked on the main structure or on a tag attached to it where it is visible. If the lifting device is made up of several lifters, each detachable from the group, these lifters must also be marked with their individual rated loads.

(3) All structural and mechanical lifting devices must be marked with the following information:

(a) Manufacturer's name and address;

(b) Serial number;

(c) Lifter weight, if over one hundred pounds (45 kg);

(d) Rated load as required in subsection (2) of this section;

(e) Name and address of repairer or modifier, when the lifting device has been repaired or modified.

(4) Installation.

(a) Structural and mechanical lifters must be assembled and installed according to manufacturer's instructions.

(b) The installer must check for correct rotation of all motors.

(5) Inspection.

(a) A qualified person must inspect all new, altered, repaired, or modified lifting devices according to Tables 20 and 21. The inspection of altered, repaired or modified lifting devices can be limited to the parts affected, if a qualified person determines that is all that is needed.

(b) The operator must inspect the lifting device before and during every lift for any indication of damage. Check the following items:

(i) Surface of the load for debris;

(ii) Condition and operation of the controls; and

(iii) Condition and operation of the indicators and meters when installed.

(c) Lifting devices must be inspected, by the operator or another competent person, according to Table 20.

(i) If any damage is found, have a qualified person determine whether there is a hazard.

(ii) Hazardous conditions must be corrected before continuing use.

Table 20
Structural and Mechanical Lifter Frequent Inspection

Inspect for:	How often:
Structural members for: • Deformation. • Cracks. • Excessive wear on any part of the lifter.	• Normal service - Monthly. • Heavy service - Weekly to monthly. • Severe service - Daily to weekly.
The device for: • Loose or missing: - Guards. - Fasteners. - Covers. - Stops. - Nameplates.	• Special or infrequent service - As recommended by a qualified person before and after each occurrence.
• All functional operating mechanisms for maladjustments interfering with operation.	• Before use, when any lifter has been idle for at least one month.
• Automatic hold-and-release mechanisms for maladjustments interfering with operation.	

Note:
• Normal service means service that involves operation with various weights within the rated load limit, averaging less than sixty-five percent of rated load limits.
• Heavy service means service that involves operation within the rated load limit, that exceeds the limits of normal service.
• Severe service means service that involves normal or heavy service with abnormal operating conditions.

(d) A qualified person must perform a periodic inspection on structural and mechanical lifters according to Table 21. Include the items in Table 20 of this section.

(i) Hazardous conditions must be corrected before continuing use.

(ii) Dated inspection reports must be kept of the most recent periodic inspection.

Table 21
Structural and Mechanical Lifting Device Periodic Inspection

Inspect for:	How often:
Loose bolts or fasteners.	• Normal service for equipment in place - Yearly.

Inspect for:	How often:
Cracked or worn gear, pulleys, sheaves, sprockets, bearings, chains, and belts.	• Heavy service - Semi-annually.
Excessive wear of friction pads, linkages, and other mechanical parts.	• Severe service - Quarterly.
Excessive wear at hoist hooking points and load support clevises or pins.	• Special or infrequent service - As recommended by a qualified person before the first such occurrence and as directed by the qualified person for any subsequent occurrences.

Note: • Normal service means service that involves operation with various weights within the rated load limit, averaging less than sixty-five percent of rated load limits.

• Heavy service means service that involves operation within the rated load limit, that exceeds the limits of normal service.

• Severe service means service that involves normal or heavy service with abnormal operating conditions.

(6) Operational tests.

(a) A qualified person must perform an operational test on new, altered, repaired, or modified lifters before use. The qualified person can limit the testing of altered, repaired or modified lifters to the parts affected.

(b) The following items must be tested:

(i) Lifters with moving parts must be tested to determine that the lifter operates according to the manufacturer's instructions.

(ii) Lifters with manually operated or automatic latches must be tested to determine that the latch operates according to manufacturer's instructions.

(iii) All indicator lights, gages, horns, bells, alarms, pointers, and other warning devices must be tested.

(c) Dated reports of all operational tests must be kept on file.

(7) Repair.

(a) Structural and mechanical lifting devices must be repaired as follows:

(i) Adjustments and testing must be done only by a qualified person;

(ii) Replacement parts used must be at least equal to the original manufacturer's specifications;

(iii) The device must be inspected according to subsection (5) of this section before returning to service.

(b) The following precautions must be taken before repairs on a lifting device are started:

(i) Disconnect, lock out and tag all sources of power "Out of Service," if applicable;

(ii) Tag the lifting device removed from service for repair "Out of Service."

(8) Lifting devices must be operated only by qualified personnel.

(9) Operators must do the following:

(a) Test all controls before use, each shift;

(b) Consult a competent person before handling the load whenever there is any doubt as to safety;

(c) Respond only to instructions from competent persons, except for stop signals. The operator must obey a stop order at all times, no matter who gives it;

(d) Do not load the lifting device in excess of its rated load or with any load that it is not specifically designed for;

(e) Apply the lifter to the load according to the instruction manual;

(f) Check that:

(i) Lifter ropes or chains are not kinked.

(ii) Multiple part lines are not twisted around each other.

(g) Bring the lifter over the load in a way that minimizes swinging;

(h) Keep the load or lifter from contacting any obstruction;

(i) Set down any attached load and store the lifting device before leaving it;

(j) Check that all personnel are clear of the load;

(k) Using the lifter for side pulls or sliding the load is prohibited, unless specifically authorized by a qualified person;

(l) Riding on loads or the lifting device is prohibited.

[Statutory Authority: RCW 49.17.010, 49.17.040, 49.17.050, 49.17.060 and chapter 49.17 RCW, and 29 C.F.R. 1926, Subpart CC. WSR 13-02-068, § 296-155-34005, filed 12/31/12, effective 2/1/13.]

WAC 296-155-34010 Vacuum lifters. (1) Vacuum lifting devices must be constructed in accordance with ASME B30.20-2010, Below-the-Hook Lifting Devices.

(2) Rated load.

(a) The rated load of each lifter and each pad must be legibly marked on the main structure or on a tag attached to it where it is visible. The marking must refer to the instruction manual for information about decreases in rating due to loads:

(i) Rigidity;

(ii) Strength;

(iii) Overhang;

(iv) Surface condition;

(v) Angle of load;

(vi) Temperature;

(vii) Number of pads;

(viii) Elevation and vacuum level.

(b) If the vacuum lifting device has shut-off valves on individual pads or groups of pads, the rated load of each pad must also be marked.

(3) The vacuum lifter must be clearly marked on the main structure with all of the following:

(a) Manufacturer's name and address;

(b) Model number;

(c) Serial number;

(d) Lifter weight;

(e) Electrical power requirements, if applicable;

(f) Pressure and volume of compressed air required, if applicable;

(g) Rated load, as required in subsection (2) of this section;

(h) If repaired or modified, the name, address, and lifter identification of repairer or modifier.

(4) Installation.

(a) Vacuum lifters must be assembled and installed according to manufacturer's instructions.

(b) The installer must check:

(i) That the power supply is the same as what is shown on the nameplate.

(ii) For correct rotation of all motors.

(c) Connect the electrical power supply to the vacuum lifter to either:

(i) The line side of the crane disconnect; or

(ii) An independent circuit.

(5) Inspection.

(a) A qualified person must inspect all new, altered, repaired, or modified vacuum lifters. A qualified person can limit the inspection of altered, repaired or modified lifters to the affected parts.

(b) The operator must inspect the lifter before and during every lift for any indication of damage, including all of the following:

(i) Surface of the load for debris;

(ii) Seal of the vacuum pad for debris;

(iii) Condition and operation of the controls;

(iv) Condition and operation of the indicators, meters and pumps when installed.

(c) Lifters must be inspected, by the operator or another competent person, according to Table 22.

(d) A qualified person must determine whether signs of damage indicate a hazard.

(e) Hazardous conditions must be corrected before continuing use.

(f) A qualified person must perform a periodic inspection of vacuum lifters according to Table 23. Include the items in Table 22 of this section.

(g) Dated inspection records must be kept on all critical items such as supporting structure, motors, controls, and other auxiliary components.

(h) Hazardous conditions must be corrected before continuing use.

Table 22
Vacuum Lifter Frequent Inspection

Inspect for:	How often:
Structural members for: • Deformation. • Cracks. • Excessive wear.	• Normal service - Monthly. • Heavy service - Weekly to monthly. • Severe service - Daily to weekly. • Special or infrequent service - As recommended by a qualified person before and after each occurrence.
The vacuum generator for output.	
The vacuum pad seal rings for: • Cuts. • Tears. • Excessive wear. • Foreign particles.	• Before using, when a lifting device has been idle for more than one month.
Vacuum lines and connections for: • Leakage. • Cuts. • Kinks. • Collapsed areas of hoses.	
The vacuum reservoir for: • Leaks. • Visible damage.	
The entire vacuum system including indicator lights, gages, horns, bells, pointers or other warning devices, and vacuum level indicators: • Attach a nonporous, clean surface to the vacuum pad or pads. • Stop the vacuum source. • Check that the vacuum level in the system does not decrease by more than the manufacturer's specified rate.	

Table 23
Vacuum Lifting Device Periodic Inspection

Inspect for:	How often:
External evidence of: • Looseness. • Wear. • Deformation. • Cracking. • Corrosion.	• Normal service for equipment in place - Yearly. • Heavy service - Semiannually. • Severe service - Quarterly. • Special or infrequent service - As recommended by a qualified person before the first such occurrence and as directed by the qualified person for any subsequent occurrences.
External evidence of damage to: • Supporting structure.	

Inspect for:	How often:
• Motors. • Controls. • Other auxiliary components.	
Clear warning labels.	

Note:
- Normal service means service that involves operation with various weights within the rated load limit, averaging less than sixty-five percent of rated load limits.
- Heavy service means service that involves operation within the rated load limit, that exceeds the limits of normal service.
- Severe service means service that involves normal or heavy service with abnormal operating conditions.

(6) Operational tests.

(a) A qualified person must perform an operational test on new, altered, repaired, or modified vacuum lifters before use. The qualified person can limit the testing of altered, repaired or modified lifters to the parts affected.

(b) The following items must be tested:

(i) Moving parts;

(ii) Latches;

(iii) Stops;

(iv) Limit switches;

(v) Control devices;

(vi) Vacuum lines;

(vii) The seals and connections must be tested for leaks by attaching a smooth nonporous clean material to the vacuum pad or pads and then stopping the vacuum source. The vacuum level in the system must not decrease more than the manufacturer's specified rate.

(c) Dated reports of all operations tests must be kept on file.

(7) Load tests.

(a) Prior to initial use, all new, altered, repaired, or modified vacuum lifting devices must be load tested and inspected by a qualified person. The qualified person can limit the test to the areas affected by the alteration, repair or modification.

(b) Test loads must not be more than one hundred twenty-five percent of the rated load of the system, unless otherwise recommended by the manufacturer or a qualified person.

(c) Written reports must be kept confirming the load rating of the vacuum lifting device.

(d) The load test must consist of one of the following procedures:

(i) Actual load test:

(A) Attach pads to the designated test load.

(B) Raise the test load a small distance to make sure the load is supported by the vacuum-lifting device.

(C) Hold the load for two minutes.

(D) Lower the load for release.

(ii) Simulated load test. Using a test fixture, apply forces to all load bearing components either individually or in assemblies equivalent to the forces encountered by the components if they were supporting a load that was one hundred twenty-five percent of the rated load.

(e) After the test, the vacuum lifting device must be visually inspected. Any condition that constitutes a hazard must be corrected before the lifting device is placed in service. If the correction affects the structure, then the lifter must be retested.

(8) Repair.

(a) Repair vacuum lifting devices as follows:

(i) Adjustments and testing must be done only by a qualified person;

(ii) Use replacement parts that are at least equal to the original manufacturer's specification;

(iii) The lifting device must be inspected before returning to service as required in subsection (5) of this section.

(b) Take the following precautions before repairs on a lifting device are started:

(i) Move the vacuum-lifting device to an area where it will cause the least interference with other operations;

(ii) Disconnect, lock out and tag all sources of power "Out of Service," if applicable;

(iii) Tag the lifting device removed from service for repair "Out of Service."

(9) Lifting devices must be operated only by qualified personnel.

(10) Operators must do the following:

(a) Test all controls before use during a shift;

(b) Consult a competent person before handling the load whenever safety is in doubt;

(c) Respond only to instructions from competent persons, except for stop orders. The operator must obey a stop order at all times, no matter who gives it;

(d) Do not load the lifter in excess of its rated load or with any load that it isn't specifically designed for;

(e) Apply the lifter to the load according to the manufacturer's instructions;

(f) Check that:

(i) Ropes or chains are not kinked.

(ii) Multiple part lines are not twisted around each other.

(iii) The pad contact surface is clean and free of loose particles.

(g) Check that vacuum lines are not:

(i) Kinked or twisted.

(ii) Wrapped around or looped over parts of the lifting device that will move during the lift.

(h) Bring the lifter over the load in a way that minimizes swinging;

(i) Lift the load a few inches to make sure that the lifting device was correctly applied;

(j) Keep the load or lifter from contacting any obstruction;

(k) Do the following if power goes off while making a lift:

(i) Warn all people in the area;

(ii) Set the load down if possible.

(l) Set down any attached load and store the lifting device before leaving it;

(m) Check that all personnel are clear of the load;

(n) Using the lifter for side pulls or sliding the load is prohibited, unless specifically authorized by a qualified person;

(o) Riding on the load or the lifter is prohibited.

[Statutory Authority: RCW 49.17.010, 49.17.040, 49.17.050, 49.17.060 and chapter 49.17 RCW, and 29 C.F.R. 1926, Subpart CC. WSR 13-02-068, § 296-155-34010, filed 12/31/12, effective 2/1/13.]

WAC 296-155-34015 Close proximity lifting magnets. (1) Close proximity lifting magnets must be constructed in accordance with ASME B30.20-2010, Below-the-Hook Lifting Devices.

(2) Rated load.

(a) General application magnets must have the rated load (capacity) marked either on the lifting magnet or on a tag attached to it. The marking must refer to the instruction manual for information about decreases in rating due to the loads.

(i) Surface condition.

(ii) Thickness.

(iii) Percentage of contact with the magnet.

(iv) Temperature.

(v) Metallurgical composition.

(vi) Deflection.

(b) Specified application magnets must have the rated load (capacity) either on the lifting magnet or on a tag attached to it, referring to the specific loads for which the capacity applies.

(3) Identification. All close proximity lifting magnets must be marked with the following information:

(a) Manufacturer's name and address;

(b) Model and lifting magnet unit identification;

(c) Weight of lifting magnet;

(d) Rated load, as required in subsection (2) of this section;

(e) Duty cycle, if applicable;

(f) Cold current (amps) at sixty-eight degrees Fahrenheit (twenty degrees Celsius), if applicable; and

(g) Voltage of primary power supply or battery, if applicable.

(h) If repaired or modified, name and address of repairer or modifier and (a) through (g) of this subsection if changed.

(4) Lifting magnets must be installed according to manufacturer's instructions.

(5) Inspection.

(a) A qualified person must inspect all new, altered, repaired, or modified lifting magnets according to Tables 24 and 25. The inspection of altered, repaired or modified lifting magnets can be limited to the parts affected, if a qualified person determines that is all that is needed.

(b) The operator must inspect the lifting magnet before and during every lift for any indication of damage. Check all of the following items:

(i) Lifting magnet face and surface of the load for foreign materials and smoothness;

(ii) Condition and operation of the:

(A) Control handle of a manually controlled permanent magnet;

(B) Indicators and meters when installed.

(c) Lifting magnets must be inspected, by the operator or another competent person, according to Table 24.

(d) A qualified person must determine whether signs of damage indicate a hazard.

(e) Hazardous conditions must be corrected before continuing use.

Table 24
Close Proximity Lifting Magnet Frequent Inspection

Inspect for:	How often:
Structural and suspension members for: • Deformation. • Cracks. • Excessive wear on any part of the lifting magnet.	• Normal service - Monthly. • Heavy service - Weekly to monthly. • Severe service - Daily to weekly. • Special or infrequent service - As recommended by a qualified person before and after each occurrence.
The lifting magnet face for: • Foreign materials. • Smoothness.	
Condition of lifting bail or sling suspension.	• Before using, when a lifting magnet has been idle for more than one month.
Condition and operation of control handle.	
Condition and operation of indicators and meters, if applicable.	
Electrical conductors, if applicable, that are visible without disassembly for: • Loose connections. • Continuity. • Corrosion. • Damage to insulation.	
Battery operated electromagnets for: • Proper level of battery electrolyte. • Corrosion of battery posts or connectors.	
Cracked housings, welds, and loose bolts.	
Legible labels and marking.	

Note:
• Normal service means service that involves operation with various weights within the rated load limit, averaging less than sixty-five percent of rated load limits.
• Heavy service means service that involves operation within the rated load limit, that exceeds the limits of normal service.
• Severe service means service that involves normal or heavy service with abnormal operating conditions.

(f) A qualified person must perform periodic inspections of close proximity lifting magnets according to Table 25. Include the items in Table 24 of this section.

(g) Dated inspection records must be kept on all critical items such as structural and suspension members, lifting magnet face, lifting bail, control handle, indicators and meters.

(h) Hazardous conditions must be corrected before continuing use.

Table 25
Close Proximity Lifting Magnet Periodic Inspection

Inspect for:	How often:
Members, fasteners, locks, switches, warning labels, and lifting parts for: • Deformation. • Wear. • Corrosion.	• Normal service for equipment in place - Yearly. • Heavy service, unless external conditions indicate that disassembly should be done to permit detailed inspection - Quarterly.
All electrical components, including controllers, battery, external power supply, power disconnects, meters, indicators, and alarms for: • Proper operation. • Condition.	• Severe service - Monthly. • Special or infrequent service - As recommended by a qualified person before the first occurrence and as directed by the qualified person for any subsequent occurrences.
Lifting magnet coil must be tested for: • Ohmic and ground readings compared to manufacturer's standards.	

Note:
• Normal service means service that involves operation with various weights within the rated load limit, averaging less than sixty-five percent of rated load limits.
• Heavy service means service that involves operation within the rated load limit, that exceeds the limits of normal service.
• Severe service means service that involves normal or heavy service with abnormal operating conditions.

(6) Operational tests.

(a) All new, altered, repaired or modified lifting magnets must be tested either by or under the direction of a qualified person before use. The qualified person can limit the testing of altered, repaired or modified lifting magnets to the parts affected.

(b) The following items must be tested:

(i) Moving parts;

(ii) Latches;

(iii) Stops;

(iv) Switches;

(v) Control devices;

(vi) Alarms; and

(vii) Warning devices, including:

(A) Indicator lights;

(B) Gauges;

(C) Horns;

(D) Bells; and

(E) Pointers.

(c) Dated reports of all operational tests must be kept on file.

(7) Load tests.

(a) Prior to initial use, all new, altered, repaired, or modified close proximity lifting devices must be load tested and inspected by a qualified person. The qualified person can limit the test to the areas affected by the alteration, repair, or modification.

(b) The breakaway force of lifting magnets must be tested according to manufacturer's directions or ANSI B30.20-2010.

(8) Repair.

(a) Close proximity lifting magnets must be repaired as follows:

(i) Adjustments and testing must be done by or under the direction of a qualified person;

(ii) Replacement parts used must be at least equal to the original manufacturer's specifications;

(iii) The magnet must be inspected before returning to service as required in subsection (5) of this section.

(b) The following precautions must be taken before repairs on a magnet are started:

(i) Disconnect, lock out and tag all sources of power "Out of Service," if applicable; and

(ii) Tag any lifting magnet removed from service for repair "Out of Service."

(9) Lifting magnets must be operated only by qualified personnel.

(10) Operators must do the following:

(a) Test all controls before use, each shift;

(b) Check all meters and indicators for proper operation before making a lift;

(c) Consult a competent person before handling the load whenever there is any doubt as to safety;

(d) Respond only to instructions from competent persons, except for stop orders. Operators must obey a stop order at all times, no matter who gives it;

(e) Do not load the lifting magnet in excess of its rated load or with any load that it isn't specifically designed for;

(f) Apply the magnet to the load according to the instruction manual;

(g) Check that:

(i) Lifter ropes or chains are not kinked;

(ii) Multiple part lines are not twisted around each other;

(iii) The lifting magnet face and the contact area on the load are clean.

(h) Bring the magnet over the load in a way that minimizes swinging;

(i) Lift the load a few inches to make sure that the lifting magnet has been correctly applied;

(j) Keep the load or lifting magnet from contact with any obstruction;

(k) Set down any attached load and store the lifting magnet before leaving it;

(l) Check that all people near the lift are warned before lifting;

(m) Using the lifter for side pulls or sliding the load is prohibited, unless specifically authorized by a qualified person; and

(n) Riding on loads or the lifting magnet is prohibited.

[Statutory Authority: RCW 49.17.010, 49.17.040, 49.17.050, 49.17.060 and chapter 49.17 RCW, and 29 C.F.R. 1926, Subpart CC. WSR 13-02-068, § 296-155-34015, filed 12/31/12, effective 2/1/13.]

WAC 296-155-34020 Remotely operated lifting magnets. (1) Remotely operated lifting magnets must be constructed in accordance with ASME B30.20-2010, Below-the-Hook Lifting Devices.

(2) Identification. All remotely operated lifting magnets must be marked with the following information:

(a) Manufacturer's name and address;

(b) Model or unit identification;

(c) Weight of lifting magnet;

(d) Duty cycle;

(e) Cold current;

(f) Voltage;

(g) If repaired or modified, name and address of repairer or modifier and (a) through (g) of this subsection if changed.

(3) Lifting magnets must be installed according to manufacturer's instructions.

(4) Inspections.

(a) A qualified person must inspect all new, altered, repaired or modified lifting magnets according to Tables 26 and 27. A qualified person can limit the inspection of altered, repaired or modified lifting magnets to the parts affected.

(b) Lifting magnets must be inspected, by the operator or another competent person, according to Table 26.

(c) A qualified person must determine whether signs of damage indicate a hazard.

(d) Hazardous conditions must be corrected before continuing use.

(e) A qualified person must perform periodic inspections of remotely operated lifting magnets according to Table 27. Include the items in Table 26.

(f) Make records of apparent external conditions to provide the basis for a continuing evaluation.

(g) Hazardous conditions must be corrected before continuing use.

Table 26
Remotely Operated Lifting Magnet Frequent Inspection

Inspect for:	How often:
Structural and suspension members for: • Deformation. • Cracks. • Excessive wear on any part of the lifting magnet.	• Normal service - Monthly. • Heavy service - Weekly to monthly. • Severe service - Daily to weekly. • Special or infrequent service - As recommended by a qualified person before and after each occurrence.
The lifting magnet face for: • Foreign materials. • Smoothness.	
Electrical conductors that are visible without disassembly.	• Before using, when a lifting magnet has been idle for more than one month.
Cracked housings, welds, and loose bolts.	

Note:
• Normal service means service that involves operation with various weights within the rated load limit, averaging less than sixty-five percent of rated load limits.
• Heavy service means service that involves operation within the rated load limit, that exceeds the limits of normal service.
• Severe service means service that involves normal or heavy service with abnormal operating conditions.

Table 27
Remotely Operated Lifting Magnet Periodic Inspection

Inspect for:	How often:
Members, fasteners, and lifting parts for: • Deformation. • Wear. • Corrosion.	• Normal service for equipment in place - Yearly. • Heavy service - Quarterly. • Severe service - Monthly.
All electrical components for: • Proper operation. • Condition.	• Special or infrequent service - As recommended by a qualified person before the first occurrence and as directed by the qualified person for any subsequent occurrences.
Magnet coil for: • Ohmic and ground readings compared to manufacturer's standards.	

(5) Operational tests.

(a) All new, altered, repaired or modified lifting magnets must be tested either by or under the direction of a qualified person before use. The qualified person can limit the testing of altered, repaired or modified lifting magnets to the parts affected.

(b) The following items must be tested:

(i) All electrical equipment for proper operation;

(ii) Warning devices, including:

(A) Indicator lights;

(B) Gauges;

(C) Horns;

(D) Bells; and

(E) Pointers.

(c) Dated reports of all operational tests must be kept on file.

(6) Repair.

(a) Remotely operated lifting magnets must be repaired as follows:

(i) Have adjustments and testing done only by or under the direction of a qualified person;

(ii) Use replacement parts that are at least equal to the original manufacturer's specifications; and

(iii) Inspect the lifter according to subsection (4) of this section, before returning to service.

(b) The following precautions must be taken before repairs on a lifter are started:

(i) Disconnect, lock out and tag all sources of power "Out of Service."

(ii) Tag any magnet removed from service for repair "Out of Service."

(7) Lifting devices must be operated only by qualified personnel.

(8) Operators must do the following:

(a) Test all controls before use during a shift;

(b) Consult a competent person before handling the load whenever there is any doubt as to safety;

(c) Respond only to instructions from competent persons, except for stop orders. Operators must obey a stop order at all times, no matter who gives it;

(d) Do not load the lifting magnet in excess of its rated load or with any load that it is not specifically designed for;

(e) Apply the lifting magnet to the load according to the instruction manual;

(f) Check that:

(i) Lifter ropes or chains are not kinked;

(ii) Multiple part lines are not twisted around each other.

(g) Bring the lifting magnet over the load in a way that minimizes swinging;

(h) Keep the load or magnet from contact with any obstruction;

(i) Set down any attached load and store the lifting magnet before leaving it;

(j) Check that all people are clear of the load;

(k) Using the lifter for side pulls or sliding the load is prohibited, unless specifically authorized by a qualified person; and

(l) Riding on loads or the lifting magnet is prohibited.

[Statutory Authority: RCW 49.17.010, 49.17.040, 49.17.050, 49.17.060 and chapter 49.17 RCW, and 29 C.F.R. 1926, Subpart CC. WSR 13-02-068, § 296-155-34020, filed 12/31/12, effective 2/1/13.]

WAC 296-155-34025 Scrap and material handling grapples. (1) Grapples must be constructed in accordance with ASME B30.20-2010, Below-the-Hook Lifting Devices.

(2) Identification. All grapples must be marked with the following information:

(a) Manufacturer's name and address;

(b) Serial number or unit identification;

(c) Grapple weight;

(d) Rated voltage, if applicable;

(e) Operating hydraulic pressure(s), if applicable;

(f) Rated capacity;

(g) If repaired or modified, name and address of repairer or modifier and (a) through (f) of this subsection if changed.

(3) Grapple installation.

(a) Grapples must be installed according to manufacturer's instructions.

(b) The hydraulic flows and pressures must be the same as shown in the manufacturer's instructions.

(4) Inspections.

(a) A qualified person must inspect all new, altered, repaired and modified grapples according to Table 28. A qualified person can limit the inspection of altered, repaired or modified grapples to the parts affected.

(b) Grapples must be visually inspected each shift they are used, by the operator or another competent person, according to Table 28.

(c) A qualified person must determine whether signs of damage indicate a hazard.

(d) Hazardous conditions must be corrected before continuing use.

Table 28
Grapple Frequent Inspection

Inspect for:	How often:
Structural members for: • Deformation. • Cracks. • Excessive wear on any part of the grapple.	• Normal service - Monthly. • Heavy service - Weekly to monthly. • Severe service - Daily to weekly.
Pins and bushings.	• Special or infrequent service - As recommended by a qualified person before and after each occurrence.
Hydraulic lines.	
Hydraulic cylinders.	• Before using, when a grapple has been idle for more than one month.
Loose bolts.	
Electrical conductors that are visible without disassembly.	

Note:
• Normal service means service that involves operation with various weights within the rated load limit, averaging less than sixty-five percent of rated load limits.
• Heavy service means service that involves operation within the rated load limit, that exceeds the limits of normal service.
• Severe service means service that involves normal or heavy service with abnormal operating conditions.

(e) A qualified person must perform a periodic inspection of grapples according to Table 29. Include the items from Table 28 of this section.

(f) Data inspection reports must be kept on critical items such as structural members, fasteners, lifting parts, hydraulic hoses, fittings and tubing, hydraulic motors and hydraulic cylinders.

(g) Hazardous conditions must be corrected before continuing use.

Table 29
Grapple Periodic Inspection

Inspect for:	How often:
Members, fasteners, and lifting parts for: • Deformation. • Wear.	• Normal service for equipment in place - Yearly.
• Corrosion.	• Heavy service, unless external conditions indicate that disassembly should be done to permit detailed inspection - Quarterly.
Hydraulic hose, fittings, and tubing for: • Evidence of leakage at the surface of the hose or its junction with metal couplings.	• Severe service - Monthly.

Inspect for:	How often:
• Blistering or abnormal deformation of the outer covering of the hose. • Leakage at threaded or clamped joints that cannot be eliminated by normal tightening or recommended procedures. • Excessive abrasion or scrubbing on the outer surface of hoses, rigid tubes, or fittings.	• Special or infrequent service - As recommended by a qualified person before the first occurrence and as directed by the qualified person for any subsequent occurrences.
Hydraulic motors for: • Loose bolts or fasteners. • Leaks at joints between sections. • Shaft seal leaks. • Unusual noises or vibration. • Loss of operating speed. • Excessive heating of the fluid. • Loss of pressure.	
Hydraulic cylinders for: • Drifting caused by fluid leaking across the piston seals. • Rod seal leakage. • Leaks at welded joints. • Scored, nicked, or dented cylinder rods. • Dented case (barrel). • Loose or deformed rod eyes or connecting joints.	
All electrical components, including meters, indicators and alarms for: • Proper operation. • Condition.	

(5) Operational tests.

(a) All new, altered, repaired or modified grapples must be tested either by or under the direction of a qualified person before use. The qualified person can limit the testing of altered, repaired or modified grapples to the parts affected.

(b) All warning devices must be tested, including:

(i) Indicator lights;

(ii) Gauges;

(iii) Horns;

(iv) Bells;

(v) Pointers;

(vi) Other warning devices.

(c) Dated reports of all operational tests must be kept on file.

(6) Repair.

(a) Grapples must be repaired as follows:

(i) Have adjustments and testing done only by or under the direction of a qualified person;

(ii) Use replacement parts that are at least equal to the original manufacturer's specifications;

(iii) Inspect the grapple according to subsection (4) of this section, before returning to service;

(b) The following precautions must be taken before repairs on a grapple are started:

(i) Disconnect, lock out and tag all sources of power "Out of Service";

(ii) Tag any grapple removed from service for repair "Out of Service."

(7) Grapples must be operated only by qualified personnel.

(8) Operators must do the following:

(a) Test all controls before use during a shift;

(b) Check all meters and indicators for proper operation before making a lift;

(c) Consult a competent person before handling the load whenever there is any doubt as to safety;

(d) Respond only to instructions from competent persons, except for stop orders. An operator must obey a stop order at all times, no matter who gives it;

(e) Do not load grapples in excess of the rated load or with any load that they are not specifically designed for;

(f) Apply the grapple to the load according to the instruction manual;

(g) Bring the grapple over the load in a way that minimizes swinging;

(h) Keep the load or grapple from contact with any obstruction;

(i) Set down any attached load and store the grapple before leaving it;

(j) Don't let anyone ride on loads or the grapple;

(k) Check that all people stay clear of the load.

[Statutory Authority: RCW 49.17.010, 49.17.040, 49.17.050, 49.17.060 and chapter 49.17 RCW, and 29 C.F.R. 1926, Subpart CC. WSR 13-02-068, § 296-155-34025, filed 12/31/12, effective 2/1/13.]

PART G

TOOLS—HAND AND POWER

WAC 296-155-350 General requirements. (1) Condition of tools. All hand and power tools and similar equipment, whether furnished by the employer or the employee, shall be maintained in a safe condition.

(2) Guarding.

(a) When power operated tools are designed to accommodate guards, they shall be equipped with such guards when in use.

(b) Belts, gears, shafts, pulleys, sprockets, spindles, drums, fly wheels, chains, or other reciprocating, rotating or

moving parts of equipment shall be guarded if such parts are exposed to contact by employees or otherwise create a hazard. Guarding shall meet the requirements as set forth in American National Standards Institute, B15.1-1953 (R1958), Safety Code for Mechanical Power-Transmission Apparatus.

(3) Personal protective equipment. Employees using hand and power tools and exposed to the hazard of falling, flying, abrasive, and splashing objects, or exposed to harmful dusts, fumes, mists, vapors, or gases shall use the particular personal protective equipment necessary to protect them from the hazard. All personal protective equipment shall meet the requirements and be maintained according to Parts B and C of this chapter.

(4) Switches.

(a) Scope. This subsection does not apply to concrete vibrators, concrete breakers, powered tampers, jack hammers, rock drills, and similar hand operated power tools.

(b) All hand-held powered platen sanders, grinders with wheels two-inch diameter or less, routers, planers, laminate trimmers, nibblers, shears, scroll saws, and jigsaws with blade shanks one-fourth of an inch wide or less may be equipped with only a positive "on-off" control.

(c) All hand-held powered drills, tappers, fastener drivers, horizontal, vertical, and angle grinders with wheels greater than two inches in diameter, disc sanders, belt sanders, reciprocating saws, saber saws, and other similar operating powered tools shall be equipped with a momentary contact "on-off" control and may have a lock-on control provided that turn-off can be accomplished by a single motion of the same finger or fingers that turn it on.

(d) All other hand-held powered tools, such as circular saws, chain saws, and percussion tools, shall be equipped with a constant pressure switch that will shut off the power when the pressure is released.

(e) Disconnect switches. All fixed power driven tools shall be provided with a disconnect switch that can either be locked or tagged in the off position.

(f) Self-feed. Automatic feeding devices shall be installed on machines whenever the nature of the work will permit. Feeder attachments shall have the feed rolls or other moving parts covered or guarded so as to protect the operator from hazardous points.

[Order 74-26, § 296-155-350, filed 5/7/74, effective 6/6/74.]

WAC 296-155-355 Hand tools. (1) Employers shall not issue or permit the use of unsafe hand tools.

(2) Wrenches, including adjustable, pipe, end, and socket wrenches shall not be used when jaws are sprung or worn to the point that slippage occurs.

(3) Nails shall not be cut with an axe.

(4) Impact tools, such as drift pins, wedges, and chisels, shall be kept free of mushroomed heads.

(5) The wooden handles of tools shall be kept free of splinters or cracks and shall be kept tight in the tool.

[Statutory Authority: RCW 49.17.040 and 49.17.050. WSR 86-03-074 (Order 86-14), § 296-155-355, filed 1/21/86; Order 74-26, § 296-155-355, filed 5/7/74, effective 6/6/74.]

WAC 296-155-360 Power-operated hand tools. (1) Electric power-operated tools.

(a) Electric power operated tools shall either be of the approved double-insulated type or grounded in accordance with Part I of this chapter.

(b) The use of electric cords for hoisting or lowering tools shall not be permitted.

(2) Pneumatic power tools.

(a) Pneumatic power tools and hose sections shall be secured by threaded couplings, quick disconnect couplings or by 100 pound tensile strength safety chain or equivalent across each connection to prevent the tool or hose connections from becoming accidentally disconnected.

(b) Safety clips or retainers shall be securely installed and maintained on pneumatic impact (percussion) tools to prevent attachments from being accidentally expelled.

(c) All pneumatically driven nailers, staplers, and other similar equipment provided with automatic fastener feed, shall have a safety device on the muzzle to prevent the tool from ejecting fasteners, unless the muzzle is in contact with the work surface.

EXCEPTION: Pneumatic nailers or staplers utilizing "fine wire" brads or staples do not require a muzzle contact safety device, provided:

(1) The overall weight of the fastening device does not exceed the weight of standard 18 gauge wire, 1-1/2 inches long.

(2) The operator and any other person within 12 feet of the point of operation wear approved eye protection.

Note: The normal maximum diameter tolerance for manufacturing standard 18 gauge wire is .045 inches.

(d) Compressed air shall not be used at the nozzle for cleaning purposes except where reduced to less than 30 p.s.i. and then only with effective chip guarding and personal protective equipment which meets the requirements of Part C of this chapter.

Note: The above requirement does not apply to concrete form, mill scale and similar cleaning purposes. Concrete form, mill scale, and similar cleaning may be performed with air pressure exceeding 30 p.s.i. provided the nozzle and/or cleaning pipe is at least three feet long with a quick-closing (deadman) valve between the hose and the nozzle or pipe. The operator and all other employees within range of flying debris shall be protected by eye or face protection as specified in WAC 296-155-215.

(e) The manufacturer's safe operating pressure for hoses, pipes, valves, filters, and other fittings shall not be exceeded.

(f) The use of hoses for hoisting or lowering tools shall not be permitted.

(g) All hoses exceeding 1/2-inch inside diameter shall have a safety device at the source of supply or branch line to reduce pressure in case of hose failure.

(h) Airless spray guns of the type which atomize paints and fluids at high pressures (1,000 pounds or more per square inch) shall be equipped with automatic or visible manual safety devices which will prevent pulling of the trigger to prevent release of the paint or fluid until the safety device is manually released.

(i) In lieu of the above, a diffuser nut which will prevent high pressure, high velocity release, while the nozzle tip is removed, plus a nozzle tip guard which will prevent the tip from coming into contact with the operator, or other equivalent protection, shall be provided.

(j) Abrasive blast cleaning nozzles. The blast cleaning nozzles shall be equipped with an operating valve which must be held open manually. A support shall be provided on which the nozzle may be mounted when it is not in use.

(3) Fuel powered tools.

(a) All fuel powered tools shall be stopped while being refueled, serviced, or maintained, and fuel shall be transported, handled, and stored in accordance with Part D of this chapter.

(b) When fuel powered tools are used in enclosed spaces, the applicable requirements for concentrations of toxic gases and use of personal protective equipment as outlined in Parts B and C of this chapter shall apply.

(4) Hydraulic power tools.

(a) The fluid used in hydraulic powered tools shall be fire resistant fluid approved under schedule 30 of the Bureau of Mines, U.S. Department of the Interior, and shall retain its operating characteristics at the most extreme temperatures to which it will be exposed.

(b) The manufacturer's safe operating pressures for hoses, valves, pipes, filters, and other fittings shall not be exceeded.

[Statutory Authority: Chapter 49.17 RCW. WSR 94-15-096 (Order 94-07), § 296-155-360, filed 7/20/94, effective 9/20/94. Statutory Authority: RCW 49.17.040 and 49.17.050. WSR 86-03-074 (Order 86-14), § 296-155-360, filed 1/21/86; Order 76-29, § 296-155-360, filed 9/30/76; Order 76-6, § 296-155-360, filed 3/1/76; Order 74-26, § 296-155-360, filed 5/7/74, effective 6/6/74.]

WAC 296-155-363 Safety requirements for powder actuated fastening systems, in accordance with ANSI A10.3-1985, Safety Requirements for Powder Actuated Fastening Systems.

[Statutory Authority: Chapter 49.17 RCW. WSR 91-11-070 (Order 91-01), § 296-155-363, filed 5/20/91, effective 6/20/91. Statutory Authority: RCW 49.17.040 and 49.17.050. WSR 86-03-074 (Order 86-14), § 296-155-363, filed 1/21/86.]

WAC 296-155-36301 Scope. This standard provides safety requirements for a powder actuated fastening tool or machine which propels a stud, pin, fastener, or other object for the purpose of affixing it by penetration to another object.

This standard does not apply to devices designed for attaching objects to soft construction materials, such as wood, plaster, tar, dry wallboard, and the like, or to stud welding equipment.

[Statutory Authority: RCW 49.17.040 and 49.17.050. WSR 86-03-074 (Order 86-14), § 296-155-36301, filed 1/21/86.]

WAC 296-155-36303 Purpose. The purpose of this standard is to provide reasonable safety for life, limb, and property, by establishing requirements for design, construction, operation, service, and storage of powder actuated fastening tools, fasteners and power loads.

[Statutory Authority: RCW 49.17.040 and 49.17.050. WSR 86-03-074 (Order 86-14), § 296-155-36303, filed 1/21/86.]

WAC 296-155-36305 Definitions applicable to this section. (1) Angle control - A safety feature designed to prevent a tool from operating when tilted beyond a predetermined angle.

(2) Approved - Meeting the requirements of this standard and acceptable to the department of labor and industries.

(3) Cased power load - A power load with the propellant contained in a closed case.

(4) Caseless power load - A power load with the propellant in solid form not requiring containment.

(5) Chamber (noun) - The location in the tool into which the power load is placed and in which it is actuated.

(6) Chamber (verb) - To fit the chamber according to manufacturer's specifications.

(7) Fasteners - Any pins (unthreaded heads) or studs (threaded heads) driven by powder actuated tools.

(8) Fixture - A special shield that provides equivalent protection where the standard shield cannot be used.

(9) Head - That portion of a fastener that extends above the work surface after being properly driven.

(10) Misfire - A condition in which the power load fails to ignite after the tool has been operated.

(11) Powder actuated fastening system - A method comprising the use of a powder actuated tool, a power load, and a fastener.

(12) Powder actuated tool (also known as tool) - A tool that utilizes the expanding gases from a power load to drive a fastener.

(13) Power load - The energy source used in powder actuated tools.

(14) Qualified operator - A person who meets the requirements of WAC 296-155-36321 (1) and (2).

(15) Shield - A device, attached to the muzzle end of a tool, which is designed to confine flying particles.

(16) Spalled area - A damaged and nonuniform concrete or masonry surface.

(17) Test velocity - The measurement of fastener velocity performed in accordance with WAC 296-155-36307 (1)(m).

(18) Tools - Tools can be divided into two types: Direct acting and indirect acting; and three classes: Low velocity, medium velocity, and high velocity.

(a) Direct acting tool - A tool in which the expanding gas of the power load acts directly on the fastener to be driven.

(b) Indirect acting tool - A tool in which the expanding gas of the power load acts on a captive piston, which in turn drives the fastener.

(c) Low-velocity tool - A tool whose test velocity has been measured ten times while utilizing the highest velocity combination of:

(i) The lightest commercially available fastener designed for that specific tool;

(ii) The strongest commercially available power load that will properly chamber in the tool;

(iii) The piston designed for that tool and appropriate for that fastener; that will produce an average test velocity from the ten tests not in excess of 100 meters per second (328 feet per second) with no single test having a velocity of over 108 m/s (354 ft/s).

(d) Medium-velocity tool - A tool whose test velocity has been measured ten times while utilizing the highest velocity combination of:

(i) The lightest commercially available fastener designed for the tool;

(ii) The strongest commercially available power load that will properly chamber in the tool;

(iii) The piston designed for that tool and appropriate for that fastener; that will produce an average test velocity from ten tests in excess of 100 m/s (328 ft/s) but not in excess of 150 m/s (492 ft/s) with no single test having a velocity of 160 m/s (525 ft/s).

(e) High-velocity tool - A tool whose test velocity has been measured ten times while utilizing the combination of:

(i) The lightest commercially available fastener designed for the tool;

(ii) The strongest commercially available power load which will properly chamber in the tool; that will produce an average velocity from the ten tests in excess of 150 m/s (492 ft/s).

[Statutory Authority: Chapter 49.17 RCW. WSR 94-15-096 (Order 94-07), § 296-155-36305, filed 7/20/94, effective 9/20/94. Statutory Authority: RCW 49.17.040 and 49.17.050. WSR 86-03-074 (Order 86-14), § 296-155-36305, filed 1/21/86.]

WAC 296-155-36307 Requirements. (1) General.

(a) The tool shall be designed to prevent inadvertent actuation.

(b) The tool shall be designed to prevent actuation when dropped in any attitude from a height of 3 meters (10 ft) onto a smooth, hard surface such as concrete or steel, if such actuation can propel a fastener or any part thereof in free flight.

(c) Actuation of the tool shall be dependent upon at least two separate and distinct operations by the operator, with at least one operation being separate from the operation of holding the tool against the work surface.

(d) The tool shall be designed not to be operable other than against a work surface with a force on the work surface equal to 22 newtons (5 lb) greater than the weight of the tool or a minimum impact energy of 4 joules (3 ft-lb).

(e) All tools shall be designed so that compatible protective shields or fixtures, designed, built, and supplied by the manufacturer of the tool, can be used (see WAC 296-155-36307 (2)(b), (3)(b), (4)(b) and 296-155-36313(8)).

(f) The tool shall be designed so that a determinable means of varying the power levels is available for selecting a power level adequate to perform the desired work (see WAC 296-155-36309(5)).

(g) The tool shall be designed so that all principal functional parts can be checked for foreign matter that may affect operation.

(h) The tool shall be designed so that all parts will be of adequate strength to resist maximum stresses imposed upon actuation when the tool is used in accordance with the manufacturer's instructions and is powered by any commercially available power load which will properly chamber in the tool.

(i) Each tool shall bear a legible permanent model designation, which shall serve as a means of identification. Each tool shall also bear a legible, permanent manufacturer's unique serial number.

(j) A lockable container shall be provided for each tool. The words "POWDER ACTUATED TOOL" shall appear in plain sight on the outside of the container. The following notice shall be attached on the inside cover of the container:

"WARNING - POWDER ACTUATED TOOL. TO BE USED ONLY BY A QUALIFIED OPERATOR AND KEPT UNDER LOCK AND KEY WHEN NOT IN USE."

(k) Each tool shall bear a durable warning label with the following statement, or the equivalent:

"WARNING - FOR USE ONLY BY QUALIFIED OPERATORS ACCORDING TO MANUFACTURER'S INSTRUCTION MANUAL."

(l) Each tool shall be supplied with the following:

(i) Operator's instruction and service manual.

(ii) Power load chart.

(iii) Tool inspection record.

(iv) Service tools and accessories.

(m) In determining tool test velocities, the velocity of the fastener shall be measured in free flight at a distance of two meters (6-1/2 ft) from the muzzle end of the tool, using accepted ballistic test methods.

(2) Design requirements - Low-velocity class.

(a) Low-velocity tools, indirect-acting (piston) type, as defined in WAC 296-155-36305, shall meet the requirements of WAC 296-155-36307(1).

(b) A shield shall be supplied with each tool.

(3) Design requirements - Medium-velocity class.

(a) Medium-velocity tools, indirect-acting (piston) type, as defined in WAC 296-155-36305, shall meet the requirements of WAC 296-155-36307(1).

(b) The tool shall have a shield at least 63 mm (2-1/2 in) in diameter mounted perpendicular to, and concentric with, the muzzle end, when it is indexed to the center position. A special shield or fixture may be used when it provides equivalent protection.

(c) The tool shall be designed so that it cannot be actuated unless it is equipped with a shield or fixture.

(d) The tool shall be designed with angle control so that it will not actuate when equipped with the standard shield indexed to the center position if the bearing surface of the shield is tilted more than 12 degrees from a flat surface.

(4) Design requirements - High-velocity class.

(a) High-velocity tools, direct-acting or indirect-acting type, as defined in WAC 296-155-36305, shall meet the requirements of WAC 296-155-36307(1).

(b) The tool shall have a shield at least 88 mm (3-1/2 in) in diameter mounted perpendicular to, and concentric with, the muzzle end, when it is indexed to the center position. A special shield or fixture may be used when it provides equivalent protection.

(c) The tool shall be designed so that it cannot be actuated unless it is equipped with a shield or fixture.

(d) The tool shall be designed with angle control so that it will not actuate when equipped with the standard shield indexed to the center position, if the bearing surface of the shield is tilted more than eight degrees from a flat surface.

[Statutory Authority: RCW 49.17.040 and 49.17.050. WSR 86-03-074 (Order 86-14), § 296-155-36307, filed 1/21/86.]

WAC 296-155-36309 Power loads. (1) Identification of cased power loads. Cased power loads shall be coded to identify power load levels by case color and power load color as specified in Table G-1.

(2) Identification of caseless power loads. Caseless power loads shall be coded to identify power load levels by power load color as specified in Table G-1 and by configuration.

(3) Power load use limitation. No power load (cased or caseless) shall be used if it will properly chamber in any existing commercially available tool and will cause a fastener to have a test velocity in excess of the maximum test velocities specified for the said tool.

(4) Identification of power load packages. Power load packages shall provide a visual number-color indication of the power level of the power load as specified in Table G-1.

TABLE G-1
Power Load Identification

	Color Identification		Nominal velocity	
Power Level	Case Color	Load Color	Meters per Second (± 13.5)	Feet per Second (± 45)
1	Brass	Gray	91	300
2	Brass	Brown	119	390
3	Brass	Green	146	480
4	Brass	Yellow	174	570
5	Brass	Red	201	660
6	Brass	Purple	229	750
7	Nickel	Gray	256	840
8	Nickel	Brown	283	930
9	Nickel	Green	311	1020
10	Nickel	Yellow	338	1110
11	Nickel	Red	366	1200
12	Nickel	Purple	393	1290

Note: The nominal velocity applies to a 9.53 mm (3/8-in) diameter 22.7-gram (350-grain) ballistic slug fired in a test device and has no reference to actual fastener velocity developed in any specific tool.

(5) Optional power load variation. Where means other than power loads of varying power levels are to be used to control penetration, such means shall provide an equivalent power level variation.

[Statutory Authority: RCW 49.17.040 and 49.17.050. WSR 86-03-074 (Order 86-14), § 296-155-36309, filed 1/21/86.]

WAC 296-155-36311 Fasteners. Fasteners for use in powder actuated tools shall be designed and manufactured to function compatibly with these tools and, when used in masonry, concrete, or steel, to effect properly the application for which they are recommended.

[Statutory Authority: RCW 49.17.040 and 49.17.050. WSR 86-03-074 (Order 86-14), § 296-155-36311, filed 1/21/86.]

WAC 296-155-36313 Operation. (1) Acceptable tools. Only tools meeting the requirements of this standard shall be used.

(2) Qualified operators. Only qualified operators shall operate tools.

(3) Use lowest velocity. The lowest velocity class of tool that will properly set the fastener shall be used.

(4) Operating limitations. Tools shall be operated in strict accordance with the manufacture's instructions.

(5) Personal protection. Eye or face protection, or both, shall be worn by operators, assistants, and adjacent personnel when tool is in use. Hearing protection shall be used when making fastenings in confined areas.

(6) Daily inspections. Each day, prior to use, the operator shall inspect the tool to determine that it is in proper working condition in accordance with the testing methods recommended by the manufacture of the tool.

(7) Defective tools. Any tool found not to be in proper working condition shall be immediately removed from service and tagged "DEFECTIVE"; it shall not be used until it has been properly repaired in accordance with the manufacture's instructions.

(8) Proper accessories. The proper shield, fixture, adapter, or accessory, suited for the application, as recommended and supplied by the manufacture, shall be used.

(9) Proper loads and fasteners. Only those types of fasteners and power loads recommended by the tool manufacture for a particular tool, or those providing the same level of safety and performance, shall be used.

(10) Questionable material. Before fastening into any questionable material, the operator shall determine its suitability by using a fastener as a center punch. If the fastener point does not easily penetrate, is not blunted, and does not fracture the material, initial test fastenings shall then be made in accordance with the tool manufacture's recommendations. (See WAC 296-155-36315(3).)

(11) Tool safety. No tool shall be loaded unless it is being prepared for immediate use. If the work is interrupted after loading, the tool shall be unloaded at once.

(12) Powder actuated magazine or clip-fed tools are not considered loaded unless a power load is actually in the ram (firing chamber), even though the magazine or clip is inserted in the tool. If work is interrupted, the firing chamber shall be cleared and the magazine or clip removed.

(13) Pointing tools. Tools shall not be loaded until just prior to the intended firing time. Neither loaded nor empty tools are to be pointed at any person; hands shall be kept clear of the open barrel end.

(14) Tool perpendicular to work. The tool shall always be held perpendicular to the work surface when fastening into any material, except for specific applications recommended by the tool manufacture.

(15) Misfires. In the event of a misfire, the operator shall hold the tool firmly against the work surface for a period of thirty seconds and then follow the explicit instructions set forth in the manufacture's instructions.

(16) Different power levels. Power loads of different power levels and types shall be kept in separate compartments or containers.

(17) Signs. A sign, at least 20 x 25 cm (8 x 10 in), using boldface type no less than 2.5 cm (1 in) in height, shall be posted in plain sight on all construction projects where tools are used. The sign shall bear wording similar to the following: "POWDER ACTUATED TOOL IN USE."

[Statutory Authority: Chapter 49.17 RCW. WSR 91-11-070 (Order 91-01), § 296-155-36313, filed 5/20/91, effective 6/20/91; WSR 89-11-035 (Order 89-03), § 296-155-36313, filed 5/15/89, effective 6/30/89. Statutory Authority: RCW 49.17.040 and 49.17.050. WSR 86-03-074 (Order 86-14), § 296-155-36313, filed 1/21/86.]

WAC 296-155-36315 Limitations of use. (1) Explosive and flammable atmospheres. The tool shall not be used in an explosive or flammable atmosphere.

(2) Unattended tools prohibited. A tool shall never be left unattended in a place where it would be available to unauthorized persons.

(3) Fasteners in hard, brittle areas. Fasteners shall not be driven into very hard or brittle materials including, but not limited to, cast iron, glazed tile, hardened steel, glass block, natural rock, hollow tile, or most brick. (See WAC 296-155-36313(10).)

(4) Fasteners in soft materials. Fasteners shall not be driven into easily penetrated or thin materials, or materials of questionable resistance, unless backed by a material that will prevent the fastener from passing completely through the other side.

(5) Fasteners in steel. Fasteners shall not be driven closer than 13 mm (1/2 in) from the edge of steel except for specific applications recommended by the tool manufacturer.

(6) Fasteners in masonry. Fasteners shall not be driven closer than 7.5 cm (3 in) from the unsupported edge of masonry materials except for specific applications recommended by the tool manufacturer.

(7) Fasteners in concrete. Fasteners shall not be driven into concrete unless material thickness is at least three times the fastener shank penetration.

(8) Fasteners in spalls. Fasteners shall not be driven into any spalled area.

(9) Fasteners in existing holes. Fasteners shall not be driven through existing holes unless a specific guide means, as recommended and supplied by the tool manufacturer, is used to ensure positive alignment.

[Statutory Authority: RCW 49.17.040 and 49.17.050. WSR 86-03-074 (Order 86-14), § 296-155-36315, filed 1/21/86.]

WAC 296-155-36317 Maintenance and storage. (1) Use of tools. The tool shall be serviced and inspected for worn or damaged parts at regular intervals as recommended by the tool manufacturer. Prior to the tool being put back into use, all worn or damaged parts shall be replaced by a qualified person using only parts supplied by the tool manufacturer. A record of this inspection shall be noted and dated on the tool inspection record.

(2) Instruction manuals. Instruction manuals, maintenance tools, and accessories supplied with the tool shall be stored in the tool container when not in use.

(3) Security. Powder actuated tools and power loads shall be locked in a container and stored in a safe place when not in use and shall be accessible only to authorized personnel.

[Statutory Authority: RCW 49.17.040 and 49.17.050. WSR 86-03-074 (Order 86-14), § 296-155-36317, filed 1/21/86.]

WAC 296-155-36319 Authorized instructor. (1) Operator qualifications. Only persons trained and authorized by the tool manufacturer or by an authorized representative of the tool manufacturer shall be qualified to instruct and qualify operators for the manufacturer's powder actuated tools.

(2) Instructor qualifications. All authorized instructors shall have read and be familiar with this standard, and shall be capable of:

(a) Disassembling, servicing, and reassembling the tool.

(b) Recognizing any worn or damaged parts or defective operation.

(c) Recognizing and clearly identifying the colors used to identify power load levels.

(d) Using the tool correctly within the limitations of its use.

(e) Training and testing operators prior to issuing a qualified operator's card.

(3) Instructor's card. All authorized instructors shall have in their possession a valid authorized instructor's card issued and signed by an authorized representative of the manufacturer. The card shall be wallet size of approximately 6 x 9 cm (2-1/2 x 3-1/2 in), and the face of the card shall bear text similar to that shown in Figure G-1.

(4) List of instructors. A list of all instructors authorized by the manufacturer to instruct and qualify operators shall be maintained by the tool manufacturer and be made available to the department of labor and industries.

(5) Revocation of instructor card. Instructor's card may be revoked by the authorizing agent or the department of labor and industries, if the instructor is known to have issued a qualified operator's card in violation of any regulation contained in this standard. When an instructor is no longer authorized to issue qualified operator's cards, cards shall be surrendered to the authorizing agent or the department of labor and industries.

AUTHORIZED INSTRUCTOR

. . . . . Powder Actuated Tools Date . . . .
(MAKE)
Card No. . . . . Social Security No. . . . . .
This certifies that . . . . . .
(NAME OF INSTRUCTOR)
has received the prescribed training in the operation and maintenance of powder actuated tools manufactured by
. . . . . and is qualified
(NAME OF MANUFACTURER)
to train and certify operators of . . . . . .
(MAKE)
powder actuated tools.
Model(s) . . . . . .
Authorized by . . . . . .
I have received instruction by the manufacturer's authorized representative in the training of operators of the above tools and agree to conform to all rules and regulations governing the instruction of tool operators.
Date of Birth . . . . . .

. . . . . .

(SIGNATURE)

Figure G-1
Sample of Authorized Instructor's Card

[Statutory Authority: Chapter 49.17 RCW. WSR 94-15-096 (Order 94-07), § 296-155-36319, filed 7/20/94, effective 9/20/94. Statutory Authority: RCW 49.17.040 and 49.17.050. WSR 86-03-074 (Order 86-14), § 296-155-36319, filed 1/21/86.]

WAC 296-155-36321 Qualified operator. (1) Operator qualifications. The operator shall be trained by an authorized instructor to be familiar with the provisions of this standard and the instructions provided by the manufacturer for operation and maintenance. The operator shall also be capable of:

(a) Reading and understanding the manufacturer's instruction manual.

(b) Cleaning the tool correctly.

(c) Recognizing any worn or damaged parts or defective operation.

(d) Recognizing the number-color code system used in this standard to identify power load levels. In the event the operator is unable to distinguish the colors used, the operator shall be given special instruction which will enable the operator to avoid error.

(e) Using a tool correctly within the limitations of its use and demonstrate competence by operating the tool in the presence of the instructor.

(2) Operator examination. After training, the operator shall substantiate competency by completing satisfactorily a written examination provided by the manufacturer of the tool.

(a) The operator's written examination shall consist of questions to establish the operator's competence with respect to:

(i) The requirements of this standard;

(ii) The powder actuated fastening system; and

(iii) The specific details of operation and maintenance of the tool(s) involved.

(b) The examination shall provide a statement, attested to by the instructor, that the applicant can (or cannot) readily distinguish the colors used to identify power load levels (see WAC 296-155-36309).

(3) Operator's card. Each applicant who meets the requirements as set forth in subsections (1) and (2) of this section shall receive a qualified operator's card, issued and signed by both the instructor and applicant. While using the tool, the operator shall carry this card.

(4) Card features. The qualified operator's card supplied by the manufacturer shall be wallet size of approximately 6 x 9 cm (2-1/2 x 3-1/2 in), and the face of the card shall bear text similar to that shown in Figure G-2.

(5) Revocation notation. There shall be printed on the card a notation reading:

"Revocation of card - Failure to comply with any of the rules and regulations for safe operation of powder actuated fastening tools shall be cause for the immediate revocation of this card."

QUALIFIED OPERATOR

. . . . . Powder Actuated Tools Date . . . .
(MAKE)
Card No. . . . . Social Security No. . . . . .
This certifies that . . . . . .
(NAME OF OPERATOR)
has received the prescribed training in the operation of powder actuated tools manufactured by
. . . . . .
(NAME OF MANUFACTURER)
Model(s) . . . . . .
Trained and issued by
. . . . . .
(SIGNATURE OF AUTHORIZED INSTRUCTOR)
I have received instruction in the safe operation and maintenance of powder actuated fastening tools of the makes and models specified and agree to conform to all rules and regulations governing that use
Date of Birth . . . . . .

. . . . . .
(SIGNATURE)

Figure G-2
Sample of Qualified Operation's Card

[Statutory Authority: Chapter 49.17 RCW. WSR 94-15-096 (Order 94-07), § 296-155-36321, filed 7/20/94, effective 9/20/94. Statutory Authority: RCW 49.17.040 and 49.17.050. WSR 86-03-074 (Order 86-14), § 296-155-36321, filed 1/21/86.]

WAC 296-155-365 Abrasive wheels and tools. (1) Power. All grinding machines shall be supplied with sufficient power to maintain the spindle speed at safe levels under all conditions of normal operation.

(2) Guarding.

(a) Grinding machines shall be equipped with safety guards in conformance with the requirements of American National Standards Institute, B7.1-1978, Safety Code for the Use, Care and Protection of Abrasive Wheels.

(b) Guard design. The safety guard shall cover the spindle end, nut, and flange projections. The safety guard shall be mounted so as to maintain proper alignment with the wheel, and the strength of the fastenings shall exceed the strength of the guard, except:

(i) Safety guards on all operations where the work provides a suitable measure of protection to the operator, may be so constructed that the spindle end, nut, and outer flange are exposed; and where the nature of the work is such as to entirely cover the side of the wheel, the side covers of the guard may be omitted; and

(ii) The spindle end, nut, and outer flange may be exposed on machines designed as portable saws.

(3) Use of abrasive wheels.

(a) Floor stand and bench mounted abrasive wheels, used for external grinding, shall be provided with safety guards (protection hoods). The maximum angular exposure of the grinding wheel periphery and sides shall be not more than 90°, except that when work requires contact with the wheel below the horizontal plane of the spindle, the angular exposure shall not exceed 125°. In either case, the exposure shall begin not more than 65° above the horizontal plane of the spindle. Safety guards shall be strong enough to withstand the effect of a bursting wheel.

(b) Floor and bench-mounted grinders shall be provided with work rests which are rigidly supported and readily adjustable. Such work rests shall be adjusted to a distance not to exceed one-eighth inch from the surface of the wheel. The work rest may be omitted when contacts of the work piece with the grinding surface below the horizontal plane of the spindle are necessary and unavoidable, or where the size or shape of the work piece precludes use of the work rest.

(c) Cup type wheels used for external grinding shall be protected by either a revolving cup guard or a band type guard in accordance with the provisions of the American National Standards Institute, B7.1-1978, Safety Requirements for the Use, Care, and Protection of Abrasive Wheels. Abrasive wheels shall only be used on machines provided with safety guards, except the following:

(i) Wheels used for internal work while within the work being ground.

(ii) Mounted wheels, two inches and smaller in diameter used in portable operations.

(iii) Types 16, 17, 18, 18R and 19 cones and plugs, and threaded hole pot balls where the work offers protection or where the size does not exceed 3 inches in diameter by 5 inches in length.

(iv) Metal centered diamond lapidary wheels either notched, segmented or continuous rim used with a coolant deflector, when operated at speeds up to 3500 surface feet per minute (S.F.P.M.).

(v) Type 1 wheels not larger than two inches in diameter and not more than 1/2 inch thick, operating at peripheral speeds less than 1800 SFPM when mounted on mandrels driven by portable drills.

(vi) Type 1 reinforced wheels not more than three inches in diameter and 1/4 inch in thickness, operating at peripheral speeds not exceeding 9500 SFPM, provided that safety glasses and face shield are worn.

(vii) Valve seat grinding wheels.

(d) Portable abrasive wheels used for internal grinding shall be provided with safety flanges (protection flanges) meeting the requirements of subdivision (f) of this subsection, except as follows:

(i) When wheels two inches or less in diameter which are securely mounted on the end of a steel mandrel are used;

(ii) If the wheel is entirely within the work being ground while in use.

(e) When safety guards are required, they shall be so mounted as to maintain proper alignment with the wheel, and the guard and its fastenings shall be of sufficient strength to retain fragments of the wheel in case of accidental breakage. The maximum angular exposure of the grinding wheel periphery and sides shall not exceed 180°.

(f) When safety flanges are required, they shall be used only with wheels designed to fit the flanges. Only safety flanges, of a type and design and properly assembled so as to ensure that the pieces of the wheel will be retained in case of accidental breakage, shall be used.

(g) All abrasive wheels shall be closely inspected and ring-tested before mounting to ensure that they are free from cracks or defects.

(h) Grinding wheels shall fit freely on the spindle and shall not be forced on. The spindle nut shall be tightened only enough to hold the wheel in place.

(i) All employees using abrasive wheels shall be protected by eye protection equipment in accordance with the requirements of Part C of this chapter, except when adequate eye protection is afforded by eye shields which are permanently attached to the bench or floor stand.

(4) Other requirements. All abrasive wheels and tools used by employees shall meet other applicable requirements of American National Standards Institute, B7.1-1978, Safety Code for the Use, Care and Protection of Abrasive Wheels.

[Statutory Authority: Chapter 49.17 RCW. WSR 94-15-096 (Order 94-07), § 296-155-365, filed 7/20/94, effective 9/20/94. Statutory Authority: RCW 49.17.040 and 49.17.050. WSR 86-03-074 (Order 86-14), § 296-155-365, filed 1/21/86; Order 74-26, § 296-155-365, filed 5/7/74, effective 6/6/74.]

WAC 296-155-367 Masonry saws. (1) Guarding.

(a) Masonry saws shall be guarded by semicircular enclosures over the blade.

(b) A method for retaining blade fragments shall be incorporated into the design of the semicircular enclosure.

(2) Safety latch. A safety latch shall be installed on notched saws to prevent the motor and cutting head assembly from lifting out of the notches.

(3) Blade speed. Blade speed shall be maintained in accordance with the manufacturer's specifications.

(4) Exhaust and eye protection.

(a) All table mounted masonry saws shall be equipped with a mechanical means of exhausting dust into a covered receptacle or be provided with water on the saw blade for dust control. The operator and any nearby worker shall wear appropriate eye protection in accordance with WAC 296-155-215.

(b) All portable hand-held masonry saw operators shall wear appropriate eye and respiratory protection in accordance with WAC 296-155-215 and chapter 296-842 WAC.

(5) Grounding. The motor frames of all stationary saws shall be grounded through conduit, water pipe, or a driven ground. Portable saws shall be grounded through three-pole cords attached to grounded electrical systems.

(6) Inspection. Masonry saws shall be inspected at regular intervals and maintained in safe operating condition.

[Statutory Authority: RCW 49.17.010, 49.17.040, 49.17.050, 49.17.060. WSR 05-03-093, § 296-155-367, filed 1/18/05, effective 3/1/05. Statutory Authority: RCW 49.17.010, [49.17].040 and [49.17].050. WSR 99-10-071, § 296-155-367, filed 5/4/99, effective 9/1/99. Statutory Authority: Chapter 49.17 RCW. WSR 90-17-051 (Order 90-10), § 296-155-367, filed 8/13/90, effective 9/24/90. Statutory Authority: RCW 49.17.040 and 49.17.050. WSR 86-03-074 (Order 86-14), § 296-155-367, filed 1/21/86.]

WAC 296-155-370 Woodworking tools. (1) Speeds. No saw shall be operated in excess of the manufacturers recommended speed.

(2) Guarding. All portable, hand held power-driven circular saws shall be equipped with guards above and below the base plate or shoe. The upper guard shall cover the saw to the depth of the teeth, except for the minimum arc required to permit the base to be tilted for bevel cuts. The lower guard shall cover the saw to the depth of the teeth, except for the minimum arc required to allow proper retraction and contact with the work. When the tool is withdrawn from the work, the lower guard shall automatically and instantly return to the covering position.

(3) Hand-fed table saws.

(a) Each circular hand-fed table saw shall be provided with a hood-type guard that will cover the blade at all times when the blade is not in use. This may be accomplished by the use of a guard that will automatically adjust to the thickness of the material being cut, or by a fixed or manually adjusted guard. If a fixed or manually adjusted guard is used, the space between the bottom of the guard and the material being cut shall not exceed 3/8 inch if 1-1/2 inches or more from the blade, and 1/4 inch if closer than 1-1/2 inches.

(b) When the blade is in use, the hood-type guard shall enclose that portion of the blade above the material.

(c) Hood-type guards shall be so designed and constructed as to resist blows and strains incidental to reasonable operation, adjusting, and handling, in order to protect the operator from flying splinters and broken saw teeth.

(d) The hood shall be so mounted as to ensure that its operation will be positive, reliable, and in alignment with the saw. The mounting shall be adequate to resist any reasonable side thrust or other force that would disrupt alignment.

(e) Where a hood-type guard cannot be used because of unusual shapes or cuts, a jig or fixture that will provide equal

safety for the operator shall be used. On the completion of such operations, the guard shall be immediately replaced.

(f) A push stick shall be used on short or narrow stock when there is a possibility of the hand contacting the cutting tool.

(g) Each hand-fed circular ripsaw shall be equipped with a spreader to minimize the possibility of material squeezing the saw or of material kickbacks. The spreader shall be made of tempered steel, or its equivalent, and shall be slightly thinner than the saw kerf. It shall be of sufficient width to provide adequate stiffness or rigidity to resist any reasonable side thrust or blow tending to bend or throw it out of position. The spreader shall be attached so that it will remain in true alignment with the blade, even when either the saw or table is tilted, and should be placed so that there is not more than 1/2-inch space between the spreader and the back of the blade when the recommended saw blade is in its maximum "up" position. If a blade smaller than the maximum permissible size is used, the spreader shall be moved to within 1/2 inch of the blade. The provision of a spreader in connection with grooving, dadoing, or rabbeting is not required. On the completion of such operations, the spreader shall be immediately replaced.

(h) Each hand-fed circular ripsaw shall be provided with antikickback devices so located as to oppose the thrust or tendency of the saw blade to pick up the material or throw it back toward the operator. These devices shall be designed to provide holding power for all the thicknesses of material being cut.

(4) Radial saws.

(a) Hoods and guards. Each saw shall be provided with a device that will completely enclose the upper portion of the blade down to a point that includes the end of the saw arbor. The upper hood shall be so constructed as to protect the operator from flying splinters and broken saw teeth, and to deflect sawdust away from the operator. The sides of the lower exposed portion of the saw blade shall be guarded from the tips of the blade teeth inward radially with no greater than 3/8-inch gullet exposure. The device shall automatically adjust itself to the thickness of the stock and remain in contact with the stock being cut for the 90° blade positions (0° bevel) throughout the full working range of miter position. A permanent label not less than 1-1/2 inches X 3/4 inch shall be affixed to the guard visible from the normal operating position, reading as follows:

WARNING: TO AVOID INJURY, SHUT OFF POWER BEFORE CLEARING A JAMMED LOWER GUARD

Such a label shall be colored standard danger red or orange in accordance with American National Standard Safety Color Code for Marking Physical Hazards, Z53.1-1979.

(b) Spreaders. When radial saws are used for ripping, a spreader shall be provided and shall be aligned with the saw blade.

(c) Antikickback devices. Antikickback devices located on both sides of the saw blade on the outfeed side, so as to oppose the thrust or tendency of the blade to pick up the material or to throw it back toward the operator, shall be used on each radial saw used for ripping. These devices shall be designed to provide adequate holding power for all the thicknesses of material being cut.

(d) Adjustable stops and return devices. An adjustable stop shall be provided to prevent the forward travel of the blade beyond the position necessary to complete the cut. A limit chain or other equally effective device shall be provided to prevent the saw blade from sliding beyond the edge of the table; or the table shall be extended to eliminate over-run.

(e) On any manually operated saw, installation shall be such that the front of the machine is slightly higher than the rear, or some other means shall be provided so that the cutting head will not roll or move out on the arm away from the column as a result of gravity or vibration. A permanent label not less than 1-1/2 inches X 3/4 inch shall be affixed to the cutting head visible from the normal crosscut operating position, reading as follows:

WARNING: TO AVOID INJURY, RETURN CARRIAGE TO THE FULL REAR POSITION AFTER EACH CROSSCUT TYPE OF OPERATION

Such a label shall be colored standard caution yellow in accordance with American National Standard Z53.1-1979.

(f) Direction of feed. Ripping and ploughing shall be against the direction in which the saw blade turns. The direction of the saw blade rotation shall be conspicuously marked on the hoods. In addition, a permanent label not less than 1-1/2 inches X 3/4 inch shall be affixed to the end of the guard at which the blade teeth exit the upper guard during operation. The label shall be at approximately the level of the arbor and shall read as follows:

DANGER: TO AVOID INJURY, DO NOT FEED MATERIAL INTO CUTTING TOOL FROM THIS END

Such a label shall be colored standard red or orange in accordance with American National Standard, Z53.1-1979.

(5) All woodworking tools and machinery shall meet any other applicable requirements of American National Standards Institute, 01.1-1971, Safety Code for Woodworking Machinery.

(6) The control switch on all stationary radial arm saws shall be placed at the front of the saw or table and shall be properly recessed or hooded to prevent accidental contact.

(a) A firm level working area shall be provided at the front of all stationary radial arm saws. The area shall be kept free of all stumbling hazards.

(b) A push stick or similar device shall be used for pushing short material through power saws.

(7) Circular power miter saws. The requirements of subsection (4)(a) of this section applies to guarding circular power miter saws.

(8) Personal protective equipment. All personal protective equipment required for use shall conform to the requirements of Part C of this chapter.

[Statutory Authority: Chapter 49.17 RCW. WSR 89-11-035 (Order 89-03), § 296-155-370, filed 5/15/89, effective 6/30/89. Statutory Authority: RCW 49.17.040 and 49.17.050. WSR 86-03-074 (Order 86-14), § 296-155-370, filed 1/21/86; Order 74-26, § 296-155-370, filed 5/7/74, effective 6/6/74.]

WAC 296-155-375 Jacks—Lever and ratchet, screw, and hydraulic. General requirements.

(1) The manufacturer's rated capacity shall be legibly marked on all jacks and this capacity shall not be exceeded.

(2) All jacks shall have a positive stop to prevent overtravel.

(3) Specially designed jacks constructed for specific purposes shall meet the approval of the department of labor and industries before being placed in service.

(4) Control parts shall be so designed that the operator will not be subjected to hazard.

(5) Blocking. When it is necessary to provide a firm foundation, the base of the jack shall be blocked or cribbed. Where there is a possibility of slippage of the metal cap of the jack, a wood block shall be placed between the cap and the load.

(6) Operation and maintenance.

(a) After the load has been raised, it shall immediately be cribbed, blocked, or otherwise secured.

(b) Hydraulic jacks exposed to freezing temperatures shall be supplied with an adequate antifreeze liquid.

(c) All jacks shall be properly lubricated at regular intervals. The lubricating instructions of the manufacturer should be followed, and only lubricants recommended by the manufacturer should be used.

(7) Each jack shall be thoroughly inspected at times which depend upon the service conditions. Inspections shall be not less frequent than the following:

(a) For constant or intermittent use at one locality, once every six months;

(b) For jacks sent out of shop for special work, when sent out and when returned;

(c) For a jack subjected to abnormal load or shock, immediately before and immediately thereafter.

(8) Repair or replacement parts shall be examined for possible defects.

(9) Jacks which are out of order shall be tagged accordingly, and shall not be used until repairs are made.

[Statutory Authority: Chapter 49.17 RCW. WSR 94-15-096 (Order 94-07), § 296-155-375, filed 7/20/94, effective 9/20/94; WSR 93-04-111 (Order 92-15), § 296-155-375, filed 2/3/93, effective 3/15/93; WSR 91-11-070 (Order 91-01), § 296-155-375, filed 5/20/91, effective 6/20/91; Order 74-26, § 296-155-375, filed 5/7/74, effective 6/6/74.]

WAC 296-155-380 Air receivers. (1) Application. This section applies to compressed air receivers, and other equipment used in providing and utilizing compressed air for performing operations such as cleaning, drilling, hoisting, and chipping. On the other hand, however, this section does not deal with the special problems created by using compressed air to convey materials nor the problems created when persons work in compressed air as in tunnels and caissons. These standards are not intended to apply to compressed air machinery and equipment used on transportation vehicles such as steam railroad cars, electric railway cars, and automotive equipment.

(2) New and existing equipment.

(a) All new air receivers installed after the effective date of these standards shall be constructed in accordance with the 1968 Edition of the A.S.M.E. Boiler and Pressure Vessel Code, section VIII.

(b) All safety valves used shall be constructed, installed, and maintained in accordance with the A.S.M.E. Boiler and Pressure Vessel Code, section VIII Edition 1968.

(3) Installation. Air receivers shall be so installed that all drains, handholes, and manholes therein are easily accessible. Air receivers should be supported with sufficient clearance to permit a complete external inspection and to avoid corrosion of external surfaces. Under no circumstances shall an air receiver be buried underground or located in an inaccessible place. The receiver should be located as close to the compressor or after-cooler as is possible in order to keep the discharge pipe short.

(4) Drains and traps. All air receivers having an internal and external operating pressure exceeding 15 psi with no limitation on size, and air receivers having an inside diameter exceeding six inches, with no limitation on pressure, if subject to corrosion, shall be supplied with a drain pipe and valve at the lowest point in the vessel; or a pipe may be used extending inward from any other location to within one-quarter inch of the lowest point. Adequate automatic traps may be installed in addition to drain valves. The drain valve on the air receiver shall be opened and the receiver completely drained frequently and at such intervals as to prevent the accumulation of oil and water in the receiver.

(5) Gages and valves.

(a) Every air receiver shall be equipped with an indicating pressure gage (so located as to be readily visible) and with one or more spring-loaded safety valves. The total relieving capacity of such safety valves shall be such as to prevent pressure in the receiver from exceeding the maximum allowable working pressure of the receiver by more than ten percent.

(b) No valve of any type shall be placed between the air receiver and its safety valve or valves.

(c) Safety appliances, such as safety valves, indicating devices and controlling devices, shall be constructed, located, and installed so that they cannot be readily rendered inoperative by any means, including the elements.

(d) All safety valves shall be tested frequently and at regular intervals to determine whether they are in good operating condition.

[Statutory Authority: Chapter 49.17 RCW. WSR 94-15-096 (Order 94-07), § 296-155-380, filed 7/20/94, effective 9/20/94.]

PART H

WELDING AND CUTTING

WAC 296-155-400 Gas welding and cutting. (1) Transporting, moving, and storing compressed gas cylinders.

(a) Valve protection caps shall be in place and secured.

(b) When cylinders are hoisted, they shall be secured on a cradle, slingboard, or pallet. They shall not be hoisted or transported by means of magnets or choker slings.

(c) Cylinders shall be moved by tilting and rolling them on their bottom edges. They shall not be intentionally dropped, struck, or permitted to strike each other violently.

(d) When cylinders are transported by powered vehicles, they shall be secured in a vertical position.

(e) Valve protection caps shall not be used for lifting cylinders from one vertical position to another. Bars shall not be used under valves or valve protection caps to pry cylinders loose when frozen. Warm, not boiling, water shall be used to thaw cylinders loose.

(f) Unless cylinders are firmly secured on a special carrier intended for this purpose, regulators shall be removed and valve protection caps put in place before cylinders are moved.

(g) A suitable cylinder truck, chain, or other steadying device shall be used to keep cylinders from being knocked over while in use. Such cylinders are not considered to be "in storage."

(h) When a job is finished, when cylinders are empty or when cylinders are moved at any time, the cylinder valve shall be closed.

(i) Compressed gas cylinders shall be secured in an upright position at all times except, if necessary, for short periods of time while cylinders are actually being hoisted or carried.

(j) Oxygen. Oxygen cylinders in storage shall be separated from fuel-gas cylinders or combustible materials (especially oil or grease), a minimum distance of twenty feet or by a noncombustible barrier at least five feet high having a fire-resistance rating of at least one-half hour.

(2) Placing cylinders.

(a) Cylinders shall be kept far enough away from the actual welding or cutting operation so that sparks, hot slag, or flame will not reach them. When this is impractical, fire resistant shields shall be provided.

(b) Cylinders shall be placed where they cannot become part of an electrical circuit. Electrodes shall not be struck against a cylinder to strike an arc.

(c) Fuel gas cylinders shall be placed with valve end up whenever they are in use. They shall not be placed in a location where they would be subject to open flame, hot metal, or other sources of artificial heat.

(d) Cylinders containing oxygen or acetylene or other fuel gas shall not be taken into confined spaces.

(3) Treatment of cylinders.

(a) Cylinders, whether full or empty, shall not be used as rollers or supports.

(b) No person other than the gas supplier shall attempt to mix gases in a cylinder. No one except the owner of the cylinder or person authorized by the owner, shall refill a cylinder. No one shall use a cylinder's contents for purposes other than those intended by the supplier. All cylinders used shall meet the department of transportation requirements, Specification for Cylinders, (49 C.F.R. Part 178, Subpart C).

(c) No damaged or defective cylinder shall be used.

(4) Use of fuel gas. The employer shall thoroughly instruct employees in the safe use of fuel gas, as follows:

(a) Before a regulator to a cylinder valve is connected, the valve shall be opened slightly and closed immediately. (This action is generally termed "cracking" and is intended to clear the valve of dust or dirt that might otherwise enter the regulator.) The person cracking the valve shall stand to one side of the outlet, not in front of it. The valve of a fuel gas cylinder shall not be cracked where the gas would reach welding work, sparks, flame, or other possible sources of ignition.

(b) The cylinder valve shall always be opened slowly to prevent damage to the regulator. For quick closing, valves on fuel gas cylinders shall not be opened more than 1 1/2 turns. When a special wrench is required, it shall be left in position on the stem of the valve while the cylinder is in use so that the fuel gas flow can be shut off quickly in case of an emergency. In the case of manifolded or coupled cylinders, at least one such wrench shall always be available for immediate use. Nothing shall be placed on top of a fuel gas cylinder, when in use, which may damage the safety device or interfere with the quick closing of the valve.

(c) Fuel gas shall not be used from cylinders through torches or other devices which are equipped with shutoff valves without reducing the pressure through a suitable regulator attached to the cylinder valve or manifold.

(d) Before a regulator is removed from a cylinder valve, the cylinder valve shall always be closed and the gas released from the regulator.

(e) If, when the valve on a fuel gas cylinder is opened, there is found to be a leak around the valve stem, the valve shall be closed and the gland nut tightened. If this action does not stop the leak, the use of the cylinder shall be discontinued, and it shall be properly tagged and removed from the work area. In the event that fuel gas should leak from the cylinder valve, rather than from the valve stem, and the gas cannot be shut off, the cylinder shall be properly tagged and removed from the work area. If a regulator attached to a cylinder valve will effectively stop a leak through the valve seat, the cylinder need not be removed from the work area.

(f) If a leak should develop at a fuse plug or other safety device, the cylinder shall be removed from the work area.

(g) Cylinders not having fixed hand wheels shall have keys, handles, or nonadjustable wrenches on valve stems while in service. In multiple cylinder installations one and only one key or handle is required for each manifold.

(5) Fuel gas and oxygen manifolds.

(a) Fuel gas and oxygen manifolds shall bear the name of the substance they contain in letters at least 1-inch high which shall be either painted on the manifold or on a sign permanently attached to it.

(b) Fuel gas and oxygen manifolds shall be placed in safe, well ventilated, and accessible locations. They shall not be located within enclosed spaces.

(c) Manifold hose connections, including both ends of the supply hose that lead to the manifold, shall be such that the hose cannot be interchanged between fuel gas and oxygen manifolds and supply header connections. Adapters shall not be used to permit the interchange of hose. Hose connections shall be kept free of grease and oil.

(d) When not in use, manifold and header hose connections shall be capped.

(e) Nothing shall be placed on top of a manifold, when in use, which will damage the manifold or interfere with the quick closing of the valves.

(6) Hose.

(a) Fuel gas hose and oxygen hose shall be easily distinguishable from each other. The contrast may be made by different colors or by surface characteristics readily distinguishable by the sense of touch. Oxygen and fuel gas hoses shall not be interchangeable. A single hose having more than one gas passage shall not be used.

(b) When parallel sections of oxygen and fuel gas hose are taped together, not more than four inches out of twelve inches shall be covered by tape.

(c) All hose in use, carrying acetylene, oxygen, natural or manufactured fuel gas, or any gas or substance which may ignite or enter into combustion, or be in any way harmful to

employees, shall be inspected at the beginning of each working shift. Defective hose shall be removed from service.

(d) Hose which has been subject to flashback, or which shows evidence of severe wear or damage, shall be tested to twice the normal pressure to which it is subject, but in no case less than 300 p.s.i. Defective hose, or hose in doubtful condition, shall not be used.

(e) Hose couplings shall be of the type that cannot be unlocked or disconnected by means of a straight pull without rotary motion.

(f) Boxes used for the storage of gas hose shall be ventilated.

(g) Hoses, cables, and other equipment shall be kept clear of passageways, ladders and stairs.

(7) Torches.

(a) Clogged torch tip openings shall be cleaned with suitable cleaning wires, drills, or other devices designed for such purpose.

(b) Torches in use shall be inspected at the beginning of each working shift for leaking shutoff valves, hose couplings, and tip connections. Defective torches shall not be used.

(c) Torches shall be lighted by friction lighters or other approved devices, and not by matches or from hot work.

(8) Regulators and gauges. Oxygen and fuel gas pressure regulators, including their related gauges, shall be in proper working order while in use.

(9) Oil and grease hazards. Oxygen cylinders and fittings shall be kept away from oil or grease. Cylinders, cylinder caps and valves, couplings, regulators, hose, and apparatus shall be kept free from oil or greasy substances and shall not be handled with oily hands or gloves. Oxygen shall not be directed at oily surfaces, greasy clothes, or within a fuel oil or other storage tank or vessel.

(10) Additional rules. For additional details not covered in this Part, applicable portions of American National Standards Institute, Z49.1-1973, Safety in Welding and Cutting, shall apply.

You are also required to protect employees from exposure to hexavalent chromium during the stainless steel welding process. See WAC 296-62-08003, Hexavalent chromium for specific criteria.

[Statutory Authority: RCW 49.17.010, 49.17.040, 49.17.050, 49.17.060. WSR 06-16-106, § 296-155-400, filed 8/1/06, effective 9/1/06. Statutory Authority: Chapter 49.17 RCW. WSR 94-15-096 (Order 94-07), § 296-155-400, filed 7/20/94, effective 9/20/94. Statutory Authority: RCW 49.17.040 and 49.17.050. WSR 86-03-074 (Order 86-14), § 296-155-400, filed 1/21/86; Order 74-26, § 296-155-400, filed 5/7/74, effective 6/6/74.]

WAC 296-155-405 Arc welding and cutting. (1) Manual electrode holders.

(a) Only manual electrode holders which are specifically designed for arc welding and cutting, and are of a capacity capable of safely handling the maximum rated current required by the electrodes, shall be used.

(b) Any current-carrying parts passing through the portion of the holder which the arc welder or cutter grips in the hand, and the outer surfaces of the jaws of the holder, shall be fully insulated against the maximum voltage encountered to ground.

(2) Welding cables and connectors.

(a) All arc welding and cutting cables shall be of the completely insulated, flexible type, capable of handling the maximum current requirements of the work in progress, taking into account the duty cycle under which the arc welder or cutter is working.

(b) Only cable free from repair or splices for a minimum distance of ten feet from the cable end to which the electrode holder is connected shall be used, except that cables with standard insulated connectors or with splices whose insulating quality is equal to that of the cable are permitted.

(c) When it becomes necessary to connect or splice lengths of cable one to another, substantial insulated connectors of a capacity at least equivalent to that of the cable shall be used. If connections are effected by means of cable lugs, they shall be securely fastened together to give good electrical contact, and the exposed metal parts of the lugs shall be completely insulated.

(d) Cables in need of repair shall not be used. When a cable, other than the cable lead referred to in subdivision (b) of this subsection, becomes worn to the extent of exposing bare conductors, the portion thus exposed shall be protected by means of rubber and friction tape or other equivalent insulation.

(3) Ground returns and machine grounding.

(a) A ground return cable shall have a safe current carrying capacity equal to or exceeding the specified maximum output capacity of the arc welding or cutting unit which it services. When a single ground return cable services more than one unit, its safe current-carrying capacity shall equal or exceed the total specified maximum output capacities of all the units which it services.

(b) Pipelines containing gases or flammable liquids, or conduits containing electrical circuits, shall not be used as a ground return. For welding on natural gas pipelines, the technical portions of regulations issued by the Department of Transportation, Office of Pipeline Safety, Minimum Federal Safety Standards for Gas Pipelines shall apply. (49 C.F.R. Part 192, Subpart C.)

(c) When a structure or pipeline is employed as a ground return circuit, it shall be determined that the required electrical contact exist at all joints. The generation of an arc, sparks, or heat at any point shall cause rejection of the structures as a ground circuit.

(d) When a structure or pipeline is continuously employed as a ground return circuit, all joints shall be bonded, and periodic inspections shall be conducted to ensure that no condition of electrolysis or fire hazard exists by virtue of such use.

(e) The frames of all arc welding and cutting machines shall be grounded either through a third wire in the cable containing the circuit conductor or through a separate wire which is grounded at the source of the current. Grounding circuits, other than by means of the structure, shall be checked to ensure that the circuit between the ground and the grounded power conductor has resistance low enough to permit sufficient current to flow to cause the fuse or circuit breaker to interrupt the current.

(f) All ground connections shall be inspected to ensure that they are mechanically strong and electrically adequate for the required current.

(4) Operating instructions. Employers shall instruct employees in the safe means of arc welding and cutting as follows:

(a) When electrode holders are to be left unattended, the electrodes shall be removed and the holders shall be so placed or protected that they cannot make electrical contact with employees or conducting objects.

(b) Hot electrode holders shall not be dipped in water; to do so may expose the arc welder or cutter to electric shock.

(c) When the arc welder or cutter has occasion to leave work or to stop work for any appreciable length of time, or when the arc welding or cutting machine is to be moved, the power supply switch to the equipment shall be opened.

(d) Any faulty or defective equipment shall be reported to the supervisor.

(e) See WAC 296-155-452 for additional requirements.

(5) Shielding. Whenever practical, all arc welding and cutting operations shall be shielded by noncombustible or flameproof screens which will protect employees and other persons working in the vicinity from the direct rays of the arc.

(6) Employee protection. Where welding or cutting operations are being performed in areas where it is possible for molten slag to contact other employees, those employees shall be protected from being burned by providing overhead protection, barricading the impact area, or other effective means.

[Statutory Authority: Chapter 49.17 RCW. WSR 94-15-096 (Order 94-07), § 296-155-405, filed 7/20/94, effective 9/20/94; WSR 88-23-054 (Order 88-25), § 296-155-405, filed 11/14/88. Statutory Authority: RCW 49.17.040 and 49.17.050. WSR 86-03-074 (Order 86-14), § 296-155-405, filed 1/21/86; Order 74-26, § 296-155-405, filed 5/7/74, effective 6/6/74.]

WAC 296-155-407 Protective clothing. (1) General requirements. Employees exposed to the hazards created by welding, cutting, or brazing operations shall be protected by personal protective equipment in accordance with the requirements of chapter 296-800 WAC, chapter 296-24 WAC, Part I and WAC 296-800-160. Appropriate protective clothing required for any welding operation will vary with the size, nature and location of the work to be performed.

(2) Specified protective clothing. Protective means which may be employed are as follows:

(a) Except when engaged in light work, all welders should wear flameproof gauntlet gloves.

(b) Flameproof aprons made of leather, or other suitable material may also be desirable as protection against radiated heat and sparks.

(c) Woolen clothing preferable to cotton because it is not so readily ignited and helps protect the welder from changes in temperature. Cotton clothing, if used, should be chemically treated to reduce its combustibility. All outer clothing such as jumpers or overalls should be reasonably free from oil or grease.

(d) Sparks may lodge in rolled-up sleeves or pockets of clothing, or cuffs of overalls or trousers. It is therefore recommended that sleeves and collars be kept buttoned and pockets be eliminated from the front of overalls and aprons. Trousers or overalls should not be turned up on the outside.

Note: For heavy work, fire-resistant leggings, high boots, or other equivalent means should be used.

(e) In production work a sheet metal screen in front of the worker's legs can provide further protection against sparks and molten metal in cutting operations.

(f) Capes or shoulder covers made of leather or other suitable materials should be worn during overhead welding or cutting operations. Leather skull caps may be worn under helmets to prevent head burns.

(g) Where there is exposure to sharp or heavy falling objects, or a hazard of bumping in confined spaces, hard hats or head protectors shall be used.

[Statutory Authority: RCW 49.17.010, [49.17].040, and [49.17].050. WSR 01-11-038, § 296-155-407, filed 5/9/01, effective 9/1/01. Statutory Authority: Chapter 49.17 RCW. WSR 95-04-007, § 296-155-407, filed 1/18/95, effective 3/1/95. Statutory Authority: RCW 49.17.040 and 49.17.050. WSR 86-03-074 (Order 86-14), § 296-155-407, filed 1/21/86.]

WAC 296-155-410 Fire prevention. (1) When practical, objects to be welded, cut, or heated shall be moved to a designated safe location or, if the objects to be welded, cut, or heated cannot be readily moved, all movable fire hazards in the vicinity shall be taken to a safe place, or otherwise protected.

(2) If the object to be welded, cut, or heated cannot be moved and if all the fire hazards cannot be removed, positive means shall be taken to confine the heat, sparks, and slag, and to protect the immovable fire hazards from them.

(3) No welding, cutting, or heating shall be done where the application of flammable paints, or the presence of other flammable compounds, or heavy dust concentrations creates a hazard.

(4) Suitable fire extinguishing equipment shall be immediately available in the work area and shall be maintained in a state of readiness for instant use.

(5) When the welding, cutting, or heating operation is such that normal fire prevention precautions are not sufficient, additional personnel shall be assigned to guard against fire while the actual welding, cutting, or heating operation is being performed, and for a sufficient period of time after completion of the work to ensure that no possibility of fire exists. Such personnel shall be instructed as to the specific anticipated fire hazards and how the firefighting equipment provided is to be used.

(6) When welding, cutting, or heating is performed on walls, floors, and ceilings, since direct penetration of sparks or heat transfer may introduce a fire hazard to an adjacent area, the same precautions shall be taken on the opposite side as are taken on the side on which the welding is being performed.

(7) For the elimination of possible fire in enclosed spaces as a result of gas escaping through leaking or improperly closed torch valves, the gas supply to the torch shall be positively shut off at some point outside the enclosed space whenever the torch is not to be used or whenever the torch is left unattended for a substantial period of time, such as during the lunch period. Overnight and at the change of shifts, the torch and hose shall be removed from the confined space. Open end fuel gas and oxygen hoses shall be immediately removed from enclosed spaces when they are disconnected from the torch or other gas-consuming device.

(8) Except when the contents are being removed or transferred, drums, pails, and other containers, which contain or

have contained flammable liquids, shall be kept closed. Empty containers shall be removed to a safe area apart from hot work operations or open flames.

(9) Drums, containers, or hollow structures which have contained toxic or flammable substances shall, before welding, cutting, or heating is undertaken on them, either be filled with water or thoroughly cleaned of such substances and ventilated and tested. For welding, cutting and heating on steel pipelines containing natural gas, the pertinent portions of regulations issued by the Department of Transportation, Office of Pipeline Safety, Minimum Federal Safety Standards for Gas Pipelines, shall apply. (49 C.F.R. Part 192, Subpart C.)

(10) Before heat is applied to a drum, container, or hollow structure, a vent or opening shall be provided for the release of any built-up pressure during the application of heat.

[Order 74-26, § 296-155-410, filed 5/7/74, effective 6/6/74.]

WAC 296-155-415 Ventilation and protection in welding, cutting, and heating. (1) Mechanical ventilation. For purposes of this section, mechanical ventilation shall meet the following requirements:

(a) Mechanical ventilation shall consist of either general mechanical ventilation systems or local exhaust systems.

(b) General mechanical ventilation shall be of sufficient capacity and so arranged as to produce the number of air changes necessary to maintain welding fumes and smoke within safe limits, as defined in Part B of this chapter.

(c) Local exhaust ventilation shall consist of freely movable hoods intended to be placed by the welder or burner as close as practicable to the work. This system shall be of sufficient capacity and so arranged as to remove fumes and smoke at the source and keep the concentration of them in the breathing zone within safe limits as defined in Part B of this chapter.

(d) Contaminated air exhausted from a working space shall be discharged into the open air or otherwise clear of the source of intake air.

(e) All air replacing that withdrawn shall be clean and respirable.

(f) Oxygen shall not be used for ventilation purposes, comfort cooling, blowing dust from clothing, or for cleaning the work area.

(2) Welding, cutting, and heating in confined spaces.

(a) Except as provided in subdivision (b) of this subsection and subdivision (b) of subsection (3) of this section, either general mechanical or local exhaust ventilation meeting the requirements of subsection (1) of this section shall be provided whenever welding, cutting, or heating is performed in a confined space.

(b) When sufficient ventilation cannot be obtained without blocking the means of access, employees in the confined space shall be protected by air line respirators in accordance with the requirements of Part C of this chapter, and an employee on the outside of such a confined space shall be assigned to maintain communication with those working within it and to aid them in an emergency.

(3) Welding, cutting, or heating of metals of toxic significance.

(a) Welding, cutting, or heating in any enclosed spaces involving the metals specified in this subsection shall be performed with either general mechanical or local exhaust ventilation meeting the requirements of subsection (1) of this section:

(i) Zinc-bearing base or filler metals or metals coated with zinc-bearing materials.

(ii) Lead base metals;

(iii) Cadmium-bearing filler materials;

(iv) Chromium-bearing metals or metals coated with chromium-bearing materials.

(b) Welding, cutting, or heating in any enclosed spaces involving the metals specified in this subdivision shall be performed with local exhaust ventilation in accordance with the requirements of subsection (1) of this section, or employees shall be protected by air line respirators in accordance with the requirements of Part C of this chapter.

(i) Metals containing lead, other than as an impurity, or metals coated with lead-bearing materials;

(ii) Cadmium-bearing or cadmium-coated base metals;

(iii) Metals coated with mercury-bearing metals;

(iv) Beryllium-containing base or filler metals. Because of its high toxicity, work involving beryllium shall be done with both local exhaust ventilation and air line respirators.

(c) Employees performing such operations in the open air shall be protected by filter-type respirators in accordance with the requirements of Part C of this chapter, except that employees performing such operations on beryllium-containing base or filler metals shall be protected by air line respirators in accordance with the requirements of Part C of this chapter.

(d) Other employees exposed to the same atmosphere as the welders or burners shall be protected in the same manner as the welder or burner.

(4) Inert-gas metal-arc welding.

(a) Since the inert-gas metal-arc welding process involves the production of ultraviolet radiation of intensities of five to thirty times that produced during shielded metal-arc welding, the decomposition of chlorinated solvents by ultraviolet rays, and the liberation of toxic fuels and gases, employees shall not be permitted to engage in, or be exposed to the process until the following special precautions have been taken:

(i) The use of chlorinated solvents shall be kept at least 200 feet, unless shielded, from the exposed arc, and surfaces prepared with chlorinated solvents shall be thoroughly dry before welding is permitted on such surfaces.

(ii) Employees in the area not protected from the arc by screening shall be protected by filter lenses meeting the requirements of Part C of this chapter. When two or more welders are exposed to each other's arc, filter lens goggles of a suitable type, meeting the requirements of Part C of this chapter shall be worn under welding helmets. Hand shields to protect the welder against flashes and radiant energy shall be used when either the helmet is lifted or the shield is removed.

(iii) Welders and other employees who are exposed to radiation shall be suitably protected so that the skin is covered completely to prevent burns and other damage by ultra-

violet rays. Welding helmets and hand shields shall be free of leaks and openings, and free of highly reflective surfaces.

(iv) When inert-gas metal-arc welding is being performed on stainless steel, the requirements of subdivision (b) of subsection (3) of this section shall be met to protect against dangerous concentrations of nitrogen dioxide.

(5) General welding, cutting, and heating.

(a) Welding, cutting, and heating, not involving conditions or materials described in subsections (2), (3), or (4) of this section, may normally be done without mechanical ventilation or respiratory protective equipment, but where, because of unusual physical or atmospheric conditions, an unsafe accumulation of contaminants exists, suitable mechanical ventilation or respiratory protective equipment shall be provided.

(b) Employees performing any type of welding, cutting, or heating shall be protected by suitable eye protective equipment in accordance with the requirements of Part C of this chapter.

[Order 74-26, § 296-155-415, filed 5/7/74, effective 6/6/74.]

WAC 296-155-420 Welding, cutting, and heating in way of preservative coatings. (1) Before welding, cutting, or heating is commenced on any surface covered by a preservative coating whose flammability is not known, a test shall be made by a competent person to determine its flammability. Preservative coatings shall be considered to be highly flammable when scrapings burn with extreme rapidity.

(2) Precautions shall be taken to prevent ignition of highly flammable hardened preservative coatings. When coatings are determined to be highly flammable, they shall be stripped from the area to be heated to prevent ignition.

(3) Protection against toxic preservative coatings:

(a) In enclosed spaces, all surfaces covered with toxic preservatives shall be stripped of all toxic coatings for a distance of at least four inches from the area of heat application, or the employees shall be protected by air line respirators, meeting the requirements of Part C of this chapter.

(b) In the open air, employees shall be protected by a respirator, in accordance with requirements of Part C of this chapter.

(4) The preservative coatings shall be removed a sufficient distance from the area to be heated to ensure that the temperature of the unstripped metal will not be appreciably raised. Artificial cooling of the metal surrounding the heating area may be used to limit the size of the area required to be cleaned.

[Order 74-26, § 296-155-420, filed 5/7/74, effective 6/6/74.]

PART I

ELECTRICAL

WAC 296-155-426 Introduction. This part addresses electrical safety requirements that are necessary for the practical safeguarding of employees involved in construction work and is divided into four major divisions and applicable definitions as follows:

(1) Introduction and definitions. Definitions applicable to this part are contained in WAC 296-155-462.

(2) Installation safety requirements. Installation safety requirements are contained in WAC 296-155-441 through 296-155-459. Included in this category are electric equipment and installations used to provide electric power and light on jobsites.

(3) Safety-related work practices. Safety-related work practices are contained in WAC 296-155-428 and 296-155-429. In addition to covering the hazards arising from the use of electricity at jobsites, these regulations also cover the hazards arising from the accidental contact, direct or indirect, by employees with all energized lines, above or below ground, passing through or near the jobsite.

(4) Safety-related maintenance and environmental considerations. Safety-related maintenance and environmental considerations are contained in WAC 296-155-432 and 296-155-434.

(5) Safety requirements for special equipment. Safety requirements for special equipment are contained in WAC 296-155-437.

[Statutory Authority: Chapter 49.17 RCW. WSR 88-11-021 (Order 88-04), § 296-155-426, filed 5/11/88.]

WAC 296-155-428 General requirements. (1) Protection of employees.

(a) No employer shall permit an employee to work in such proximity to any part of an electric power circuit that the employee could contact the electric power circuit in the course of work, unless the employee is protected against electric shock by de-energizing the circuit and grounding it or by guarding it effectively by insulation or other means.

(b) No person, firm, corporation, or agent of same, shall require or permit any employee to perform any function in proximity to electrical conductors or to engage in any excavation, construction, demolition, repair, or other operation, unless and until danger from accidental contact with said electrical conductors has been effectively guarded by de-energizing the circuit and grounding it or by guarding it by effective insulation or other effective means.

(c) In work areas where the exact location of underground electric powerlines is unknown, no activity which may bring employees into contact with those powerlines shall begin until the powerlines have been positively and unmistakably de-energized and grounded.

(d) Before work is begun the employer shall ascertain by inquiry or direct observation, or by instruments, whether any part of an energized electric power circuit, exposed or concealed, is so located that the performance of the work may bring any person, tool, or machine into physical or electrical contact with the electric power circuit. The employer shall post and maintain proper warning signs where such a circuit exists. The employer shall advise employees of the location of such lines, the hazards involved, and the protective measures to be taken.

(e) No work shall be performed, no material shall be piled, stored or otherwise handled, no scaffolding, commercial signs, or structures shall be erected or dismantled, nor any tools, machinery or equipment operated within the specified minimum distances from any energized high voltage electrical conductor capable of energizing the material or equipment; except where the electrical distribution and transmission lines have been de-energized and visibly grounded at

point of work, or where insulating barriers not a part of or an attachment to the equipment have been erected, to prevent physical contact with the lines, equipment shall be operated proximate to, under, over, by, or near energized conductors only in accordance with the following:

(i) For lines rated 50 kV. or below, minimum clearance between the lines and any part of the equipment or load shall be ten feet.

(ii) For lines rated over 50 kV. minimum, clearance between the lines and any part of the equipment or load shall be ten feet plus 0.4 inch or each 1 kV. over 50 kV., or twice the length of the line insulator but never less than ten feet.

(f) Work on energized equipment. Only qualified persons shall work on electric circuit parts of equipment that have not been deenergized under the procedures of WAC 296-155-429(4). Such persons shall be capable of working safely on energized circuits and shall be familiar with the proper use of special precautionary techniques, personal protective equipment, insulating and shielding materials, and insulated tools.

(g) Overhead electric lines. Where overhead electric conductors are encountered in proximity to a work area, the employer shall be responsible for:

(i) Ascertaining the voltage and minimum clearance distance required; and

(ii) Maintaining the minimum clearance distance; and

(iii) Ensuring that the requirements of this section are complied with.

(h) If relocation of the electrical conductors is necessary, arrangements shall be made with the owners of the lines for such relocation.

(i) Barriers.

(i) Barriers shall be of such character and construction as to effectively provide the necessary protection without creating other hazards or jeopardizing the operation of the electrical circuits.

(ii) Barriers installed within the ten feet clearance from conductors shall be installed only under the supervision of authorized and qualified persons and this shall include a representative of the electrical utility or owner involved.

(j) Exceptions.

(i) These rules do not apply to the construction, reconstruction, operation, and maintenance, of overhead electrical lines, structures, and associated equipment by authorized and qualified electrical workers.

(ii) These rules do not apply to authorized and qualified employees engaged in the construction, reconstruction, operation, and maintenance, of overhead electrical circuits or conductors and associated equipment of rail transportation systems or electrical generating, transmission, distribution and communication systems which are covered by chapters 296-45 and 296-32 WAC.

(k) Special precautions must be taken.

(i) When handling any winch lines, guy wires, or other free cable, wire or rope in the vicinity of any electrical conductors.

(ii) When pulling a winch line, or other cable or rope under energized electrical conductors from a boom, mast, pile driver, etc., in such a manner as to make possible an approach to within ten feet of a conductor.

(iii) When there is possibility of a winch line, cable, etc., either becoming disconnected or breaking under load because of excessive strain and flipping up into overhead conductors.

(iv) When placing steel, concrete reinforcement, wire mesh, etc.

(v) When handling pipe or rod sections in connection with digging wells or test holes.

(vi) When moving construction equipment, apparatus, machinery, etc., all such movements must avoid striking supporting structures, guy wires, or other elements of the electrical utility system causing the conductors to so swing or move as to decrease clearances to less than ten feet from construction equipment, or to cause them to come together.

(l) Warning sign required.

(i) An approved durable warning sign legible at twelve feet, reading "It is unlawful to operate this equipment within ten feet of electrical conductors" shall be posted and maintained in plain view of the operator at the controls of each crane, derrick, shovel, drilling rig, pile driver or similar apparatus which is capable of vertical, lateral or swinging motion.

(ii) A similar sign shall be installed on the outside of the equipment and located as to be readily visible to mechanics or other persons engaged in the work operation.

(iii) Signs shall be not less than 6" x 8" dimensions with the word "WARNING" or "DANGER" in large letters and painted red across the top and the other letters in black painted on yellow background.

(m) Any overhead wire shall be considered to be an energized line until the owner of such line or the electrical utility authorities indicate that it is not an energized line and it has been visibly grounded.

(2) Passageways and open spaces.

(a) Barriers or other means of guarding shall be provided to ensure that workspace for electrical equipment will not be used as a passageway during periods when energized parts of electrical equipment are exposed.

(b) Working spaces, walkways, and similar locations shall be kept clear of cords so as not to create a tripping hazard to employees.

(3) Load ratings. In existing installations, no changes in circuit protection shall be made to increase the load in excess of the load rating of the circuit wiring.

(4) Fuses. When fuses are installed or removed with one or both terminals energized, special tools insulated for the voltage shall be used.

(5) Cords and cables.

(a) Worn or frayed electric cords or cables shall not be used.

(b) Extension cords shall not be fastened with staples, hung from nails, or suspended by wire.

(6) Interlocks. Only a qualified person following the requirements of this section may defeat an electrical safety interlock, and then only temporarily while they are working on the equipment. The interlock systems shall be returned to its operable condition when this work is completed.

(7) Portable electric equipment—Handling. Portable equipment shall be handled in a manner which will not cause damage. Flexible electric cords connected to equipment shall not be used for raising or lowering the equipment. Flexible cords shall not be fastened with staples or otherwise hung in such a fashion as could damage the outer jacket or insulation.

(8) Visual inspection. When an attachment plug is to be connected to a receptacle (including any on a cord set), the relationship of the plug and receptacle contacts shall first be checked to ensure they are of proper mating configurations.

(9) Connecting attachment plugs.

(a) Employees' hands shall not be wet when plugging and unplugging flexible cords and cord- and plug-connected equipment, if energized equipment is involved.

(b) Energized plug and receptacle connections shall be handled only with insulating protective equipment if the condition of the connection could provide a conducting path to the employee's hand (if, for example, a cord connector is wet from being immersed in water).

(c) Locking-type connectors shall be properly secured after connection.

(10) Routine opening and closing circuits. Load rated switches, circuit breakers, or other devices specifically designed as disconnecting means shall be used for the opening, reversing, or closing of circuits under load conditions. Cable connectors not of the load-break type, fuses, terminal lugs, and cable splice connections shall not be used for such purposes, except in an emergency.

(11) Reclosing circuits after protective device operation. After a circuit is deenergized by a circuit protective device, the circuit shall not be manually reenergized until it has been determined that the equipment and circuit can be safety energized. This repetitive manual reclosing of circuit breakers or reenergizing circuits through replaced fuses is prohibited.

Note: When it can be determined from the design of the circuit and the overcurrent devices involved that the automatic operation of a device was caused by an overload rather than a fault connection, no examination of the circuit or connected equipment is needed before the circuit is reenergized.

(12) Test instruments and equipment—Use. Only qualified persons shall perform testing work on electric circuits or equipment.

(13) Visual inspection. Test instruments and equipment and all associated test leads, cables, power cords, probes, and connectors shall be visually inspected for external defects and damage before the equipment is used. If there is a defect or evidence of damage that might expose an employee to injury, the defective or damaged item shall be removed from service, and no employee shall use it until necessary repairs and tests to render the equipment safe have been made.

(14) Rating of equipment. Test instruments and equipment and their accessories shall be rated for the circuits and equipment to which they will be connected and shall be designed for the environment in which they will be used.

(15) Occasional use of flammable or ignitible materials. Where flammable materials are present only occasionally, electric equipment capable of igniting them shall not be used, unless measures are taken to prevent hazardous conditions from developing. Such materials include, but are not limited to: Flammable gases, vapors, or liquids; combustible dust; and ignitible fibers or flyings.

(16) Work on energized equipment. Only qualified persons shall work on electric circuit parts of equipment that have not been deenergized under the procedures of WAC 296-155-429(4). Such persons shall be capable of working safely on energized circuits and shall be familiar with the proper use of special precautionary techniques, personal protective equipment, insulating and shielding materials, and insulated tools.

(17) Overhead lines. If work is to be performed near overhead lines, the lines shall be deenergized and grounded, or other protective measures shall be provided before work is started. If the lines are to be deenergized, arrangements shall be made with the person or organization that operates or controls the electric circuits involved to deenergize and ground them. If protective measures, such as guarding, isolating, or insulating, these precautions shall prevent employees from contacting such lines directly with any part of their body or indirectly through conductive materials, tools, or equipment.

(18) Unqualified persons. When an unqualified person is working in an elevated position, or on the ground, near overhead lines, the location shall be such that the person and the longest conductive object they may contact cannot come closer to any unguarded, energized overhead line than the following distances:

(a) For voltages to ground 50kV or below—10 ft.;

(b) For voltages to ground over 50kV—10 ft. plus 0.4 inch for every 1kV over 50kV.

(19) Qualified persons. When a qualified person is working in the vicinity of overhead lines, whether in an elevated position or on the ground, the person shall not approach or take any conductive object without an approved insulating handle closer to exposed energized parts that are shown in subsection (1)(e) of this section unless:

(a) The person is insulated from the energized part (gloves, with sleeves if necessary), rated for the voltage involved are considered to be insulation of the person from the energized part on which work is performed; or

(b) The energized part is insulated both from all other conductive objects at a different potential and from the person; or

(c) The person is insulated from all conductive objects at a potential different from that of the energized part.

(20) Vehicular and mechanical equipment.

(a) Any vehicle or mechanical equipment capable of having parts of its structure elevated near energized overhead lines shall be operated so that a clearance of 10 ft. is maintained. If the voltage is higher than 50kV, the clearance shall be increased 0.4 inch for every 1kV over the voltage. However, under any of the following conditions, the clearance may be reduced:

(i) If the vehicle is in transit with its structure lowered, the clearance may be reduced to 4 ft. If the voltage is higher than 50kV, the clearance shall be increased 0.4 inch for every 1kV over that voltage.

(ii) If insulating barriers are installed to prevent contact with the lines, and if the barriers are rated for the voltage of the line being guarded and are not a part of or an attachment to the vehicle or its raised structure, the clearance may be reduced to a distance within the designed working dimensions of the insulating barrier.

(b) If the equipment is an aerial lift insulated for the voltage involved, and if the work is performed by a qualified person, the clearance (between the uninsulated portion of the aerial lift and the power line) may be reduced to the distance given in (a) through (d) of this subsection.

(c) Employees standing on the ground shall not contact the vehicle or mechanical equipment or any of its attachments, unless:

(i) The employee is using protective equipment rated for the voltage; or

(ii) The equipment is located so that no uninsulated part of its structure (that portion of the structure that provides a conductive path to employees on the ground) can come closer to the line than permitted in this section.

(d) If any vehicle or mechanical equipment capable of having parts of its structure elevated near energized overhead lines is of grounding shall not stand at the grounding location whenever there is a possibility of overhead line contact. Additional precautions, such as the use of barricades or insulation, shall be taken to protect employees from hazardous ground potentials, depending on earth resistivity and fault currents, which can develop within the first few feet or more outward from the grounding point.

(21) Illumination.

(a) Employees shall not enter spaces containing exposed energized parts, unless illumination is provided that enables the employees to perform the work safely.

(b) Where lack of illumination or an obstruction precludes observation of the work to be performed, employees shall not perform tasks near exposed energized parts. Employees shall not reach blindly into areas which may contain energized parts.

(22) Confined or enclosed space (such as a manhole or vault) that contains exposed energized parts, the employer shall provide, and the employee shall use, protective shields, protective barriers, or insulating materials as necessary to avoid inadvertent contact with these parts. Doors, hinged panels, and the like shall be secured to prevent their swinging into an employee and causing the employee to contact exposed energized parts.

(23) Conductive materials and equipment. Conductive materials and equipment that are in contact with any part of an employee's body shall be handled in a manner that will prevent them from contacting exposed energized conductors or circuit parts. If an employee handle long dimensional conductive objects (such as ducts and pipes) practices (such as the use of insulation, guarding, and material handling techniques) which will minimize the hazard.

(24) Portable ladders. Portable ladders shall have nonconductive siderails if they are used where the employee or the ladder could contact exposed energized parts.

(25) Conductive apparel. Conductive articles of jewelry and clothing (such as watch bands, bracelets, rings, key chains, necklaces, metalized aprons, cloth with conductive thread, or metal headgear) shall not be worn if they might contact exposed energized parts.

(26) Housekeeping duties.

(a) Where live parts present an electrical contact hazard, employees shall not perform housekeeping duties at such close distances to the parts that there is a possibility of contact, unless adequate safeguards (such as insulating equipment or barriers) are provided.

(b) Electrically conductive cleaning materials (including conductive solids such as steel wool, metalized cloth, and silicon carbide, as well as conductive liquid solutions) shall not be used in proximity to energized parts unless procedures are followed which will prevent electrical contact.

[Statutory Authority: Chapter 49.17 RCW. WSR 94-15-096 (Order 94-07), § 296-155-428, filed 7/20/94, effective 9/20/94; WSR 92-23-017 (Order 92-13), § 296-155-428, filed 11/10/92, effective 12/18/92; WSR 88-11-021 (Order 88-04), § 296-155-428, filed 5/11/88.]

WAC 296-155-429 Lockout and tagging of circuits. (1) Controls. Controls that are deactivated during the course of work on energized or deenergized equipment or circuits shall be tagged and padlocked in the open position.

(2) Equipment and circuits. Equipment or circuits that are deenergized shall be rendered inoperative and have tags and locked padlocks attached at all points where such equipment or circuits can be energized.

(3) Tags. Tags shall be placed to identify plainly the equipment or circuits being worked on.

(4) Lockout and tagging. While any employee is exposed to contact with parts of fixed electric equipment or circuits which have been deenergized, the circuits energizing the parts shall be locked out or tagged or both according to the requirements of this section. The requirements shall be followed in the order in which they are presented (i.e., (a) of this subsection first, then (b) of this subsection).

Note 1: As used in this section, fixed equipment refers to equipment fastened in connected by permanent wiring methods.

Note 2: Lockout and tagging procedures that comply with chapter 296-803 WAC will also be deemed to comply with this subsection provided that:

1. The procedures address the electrical safety hazards covered by this part; and

2. The procedures also incorporate the requirements of (c)(iv) and (d)(ii) of this subsection.

(a) Procedures. The employer shall maintain a written copy of the procedures outlined in this subsection and shall make it available for inspection by employees and by the director and his/her authorized representative.

Note: The written procedures may be in the form of a copy of this section, WAC 296-155-429.

(b) Deenergizing equipment.

(i) Safe procedures for deenergizing circuits and equipment shall be determined before circuits or equipment are deenergized.

(ii) The circuits and equipment to be worked on shall be disconnected from all electric energy sources. Control circuit devices, such as push buttons, selector switches, and interlocks, shall not be used as the sole means for deenergizing circuits or equipment. Interlocks for electric equipment shall not be used as a substitute for lockout and tagging procedures.

(iii) Stored electric energy which might endanger personnel shall be released. Capacitors shall be discharged and high capacitance elements shall be short-circuited and grounded, if the stored electric energy might endanger personnel.

Note: If the capacitors or associated equipment are handled in meeting this requirement, they shall be treated as energized.

(iv) Stored nonelectrical energy in devices that could reenergize electric circuit parts shall be blocked or relieved to the extent that the circuit parts could not be accidentally energized by the device.

(c) Application of locks and tags.

(i) A lock and a tag shall be placed on each disconnecting means used to deenergize circuits and equipment on which work is to be performed, except as provided in (c)(iii) and (v) of this subsection. The lock shall be attached to prevent persons from operating the disconnecting means unless they resort to undue force or the use of tools.

(ii) Each tag shall contain a statement prohibiting unauthorized operation of the disconnecting means and removal of the tag.

(iii) If a lock cannot be applied, or if the employer can demonstrate that tagging procedures will provide a level of safety equivalent to that obtained by the use of a lock, a tag may be used without a lock.

(iv) A tag used without a lock, as permitted by item (iii) of this subsection, shall be supplemented by at least one additional safety measure that provides a level of safety equivalent to that obtained by the use of a lock. Examples of additional safety measures include the removal of an isolating circuit element, blocking of a controlling switch, or opening of an extra disconnecting device.

(v) A lock may be placed without a tag only under the following conditions:

(A) Only one circuit or piece of equipment is deenergized; and

(B) The lockout period does not extend beyond the work shifts; and

(C) Employees exposed to the hazards associated with reenergizing the circuit or equipment are familiar with this procedure.

(d) Verification of deenergized condition. The requirements of this subsection shall be met before any circuits or equipment can be considered and worked as deenergized.

(i) A qualified person shall operate the equipment operating controls or otherwise verify that the equipment cannot be restarted.

(ii) A qualified person shall use test equipment to test the circuit elements and electrical parts of equipment to which employees will be exposed and shall verify that the circuit elements and equipment parts are deenergized. The test shall also determine if any energized conditions exists as a result of inadvertently induced voltage or unrelated voltage backfeed even though specific parts of the circuit have been deenergized and presumed to be safe. If the circuit to be tested is over 600 volts, nominal, the test equipment shall be checked for proper operation immediately before and immediately after this test.

(e) Reenergizing equipment. These requirements shall be met, in the order given, before circuits or equipment are reenergized, even temporarily.

(i) A qualified person shall conduct tests and visual inspections, as necessary, to verify that all tools, electrical jumpers, shorts, grounds, and other such devices have been removed, so that the circuits and equipment can be safely energized.

(ii) Employees exposed to the hazards associated with reenergizing the circuit or equipment shall be warned to stay clear of circuits and equipment.

(iii) Each lock and tag shall be removed by the employee who applied it or under his or her direct supervision. However, if this employee is absent from the work place, then the lock or tag may be removed by a qualified person designated to perform this task provided that:

(A) The employer ensures that the employee who applied the lock or tag is not available at the work place; and

(B) The employer ensures that the employee is aware that the lock or tag has been removed before he or she resumes work at that work place.

(iv) There shall be a visual determination that all employees are clear of the circuits and equipment.

[Statutory Authority: RCW 49.17.010, 49.17.040, 49.17.050, and 49.17.060. WSR 04-15-105, § 296-155-429, filed 7/20/04, effective 11/1/04. Statutory Authority: Chapter 49.17 RCW. WSR 96-17-056, § 296-155-429, filed 8/20/96, effective 10/15/96; WSR 94-15-096 (Order 94-07), § 296-155-429, filed 7/20/94, effective 9/20/94; WSR 88-11-021 (Order 88-04), § 296-155-429, filed 5/11/88.]

WAC 296-155-432 Maintenance of equipment. The employer shall ensure that all wiring components and utilization equipment in hazardous locations are maintained in a dust-tight, dust-ignition-proof, or explosion-proof condition, as appropriate. There shall be no loose or missing screws, gaskets, threaded connections, seals, or other impairments to a tight condition.

[Statutory Authority: Chapter 49.17 RCW. WSR 88-11-021 (Order 88-04), § 296-155-432, filed 5/11/88.]

WAC 296-155-434 Environmental deterioration of equipment. (1) Deteriorating agents.

(a) Unless identified for use in the operating environment, no conductors or equipment shall be located:

(i) In damp or wet locations;

(ii) Where exposed to gases, fumes, vapors, liquids, or other agents having a deteriorating effect on the conductors or equipment; or

(iii) Where exposed to excessive temperatures.

(b) Control equipment, utilization equipment, and busways approved for use in dry locations only shall be protected against damage from the weather during building construction.

(2) Protection against corrosion. Metal raceways, cable armor, boxes, cable sheathing, cabinets, elbows, couplings, fittings, supports, and support hardware shall be of materials appropriate for the environment in which they are to be installed.

[Statutory Authority: Chapter 49.17 RCW. WSR 88-11-021 (Order 88-04), § 296-155-434, filed 5/11/88.]

WAC 296-155-437 Batteries and battery charging. (1) General requirements.

(a) Batteries of the unsealed type shall be located in enclosures with outside vents or in well ventilated rooms and shall be arranged so as to prevent the escape of fumes, gases, or electrolyte spray into other areas.

(b) Ventilation shall be provided to ensure diffusion of the gases from the battery and to prevent the accumulation of an explosive mixture.

(c) Racks and trays shall be substantial and shall be treated to make them resistant to the electrolyte.

(d) Floors shall be of acid resistant construction unless protected from acid accumulations.

(e) Face shields, aprons, and rubber gloves shall be provided for and worn by workers handling acids or batteries.

(f) Facilities for quick drenching of the eyes and body shall be provided within twenty-five feet (7.62 m) of battery handling areas.

(g) Facilities shall be provided for flushing and neutralizing spilled electrolyte and for fire protection.

(2) Charging.

(a) Battery charging installations shall be located in areas designated for that purpose.

(b) Charging apparatus shall be protected from damage by trucks.

(c) When batteries are being charged, the vent caps shall be kept in place to avoid electrolyte spray. Vent caps shall be maintained in functioning condition.

[Statutory Authority: Chapter 49.17 RCW. WSR 88-11-021 (Order 88-04), § 296-155-437, filed 5/11/88.]

WAC 296-155-441 Applicability. (1) Covered. WAC 296-155-441 through 296-155-459 contain installation safety requirements for electrical equipment and installations used to provide electric power and light at the jobsite. These sections apply to installations, both temporary and permanent, used on the jobsite; but these sections do not apply to existing permanent installations that were in place before the construction activity commenced.

Note: If the electrical installation is made in accordance with the National Electrical Code ANSI/NFPA 70-1984, exclusive of formal interpretations and tentative interim amendments, it will be deemed to be in compliance with WAC 296-155-444 through 296-155-459, except for WAC 296-155-447 (2)(a) and 296-155-449 (1)(b)(ii)(E), (F), (G), and (J).

(2) Not covered. WAC 296-155-441 through 296-155-459 do not cover installations used for the generation, transmission, and distribution of electric energy, including related communication, metering, control, and transformation installations. (However, these regulations do cover portable and vehicle-mounted generators used to provide power for equipment used at the jobsite.) See the National Electrical Safety Code (NESC).

[Statutory Authority: RCW 49.17.010, [49.17].040, [49.17].050. WSR 02-12-098, § 296-155-441, filed 6/5/02, effective 8/1/02. Statutory Authority: Chapter 49.17 RCW. WSR 88-11-021 (Order 88-04), § 296-155-441, filed 5/11/88.]

WAC 296-155-444 General requirements. (1) Approval. All electrical conductors and equipment shall be approved.

(2) Examination, installation, and use of equipment.

(a) Examination. The employer shall ensure that electrical equipment is free from recognized hazards that are likely to cause death or serious physical harm to employees. Safety of equipment shall be determined on the basis of the following considerations:

(i) Suitability for installation and use in conformity with the provisions of this part. Suitability of equipment for an identified purpose may be evidenced by listing, labeling, or certification for that identified purpose.

(ii) Mechanical strength and durability, including, for parts designed to enclose and protect other equipment, the adequacy of the protection thus provided.

(iii) Electrical insulation.

(iv) Heating effects under conditions of use.

(v) Arcing effects.

(vi) Classification by type, size, voltage, current capacity, specific use.

(vii) Other factors which contribute to the practical safeguarding of employees using or likely to come in contact with the equipment.

(b) Installation and use. Listed, labeled, or certified equipment shall be installed and used in accordance with instructions included in the listing, labeling, or certification.

(3) Interrupting rating. Equipment intended to break current shall have an interrupting rating at system voltage sufficient for the current that must be interrupted.

(4) Mounting and cooling of equipment.

(a) Mounting. Electric equipment shall be firmly secured to the surface on which it is mounted. Wooden plugs driven into holes in masonry, concrete, plaster, or similar materials shall not be used.

(b) Cooling. Electrical equipment which depends upon the natural circulation of air and convection principles for cooling of exposed surfaces shall be installed so that room air flow over such surfaces is not prevented by walls or by adjacent installed equipment. For equipment designed for floor mounting, clearance between top surfaces and adjacent surfaces shall be provided to dissipate rising warm air. Electrical equipment provided with ventilating openings shall be installed so that walls or other obstructions do not prevent the free circulation of air through the equipment.

(5) Splices. Conductors shall be spliced or joined with splicing devices designed for the use or by brazing, welding, or soldering with a fusible metal or alloy. Soldered splices shall first be so spliced or joined as to be mechanically and electrically secure without solder and then soldered. All splices and joints and the free ends of conductors shall be covered with an insulation equivalent to that of the conductors or with an insulating device designed for the purpose.

(6) Arcing parts. Parts of electric equipment which in ordinary operation produce arcs, sparks, flames, or molten metal shall be enclosed or separated and isolated from all combustible material.

(7) Marking. Electrical equipment shall not be used unless the manufacturer's name, trademark, or other descriptive marking by which the organization responsible for the product may be identified is placed on the equipment and unless other markings are provided giving voltage, current, wattage, or other ratings as necessary. The marking shall be of sufficient durability to withstand the environment involved.

(8) Identification of disconnecting means and circuits. Each disconnecting means required by this part for motors and appliances shall be legibly marked to indicate its purpose, unless located and arranged so the purpose is evident. Each service, feeder, and branch circuit, at its disconnecting means or overcurrent device, shall be legibly marked to indicate its purpose, unless located and arranged so the purpose is evident. These markings shall be of sufficient durability to withstand the environment involved.

(9) Construction site. Precautions shall be taken to make any necessary open wiring inaccessible to unauthorized personnel.

(10) 600 volts, nominal, or less. This subsection applies to equipment operating at 600 volts, nominal, or less.

(a) Working space about electric equipment. Sufficient access and working space shall be provided and maintained about all electric equipment to permit ready and safe operation and maintenance of such equipment.

(i) Working clearances. Except as required or permitted elsewhere in this part, the dimension of the working space in the direction of access to live parts operating at 600 volts or less and likely to require examination, adjustment, servicing, or maintenance while alive shall not be less than indicated in Table I-1. In addition to the dimensions shown in Table I-1, workspace shall not be less than thirty inches (762 mm) wide in front of the electric equipment. Distances shall be measured from the live parts if they are exposed, or from the enclosure front or opening if the live parts are enclosed. Walls constructed of concrete, brick, or tile are considered to be grounded. Working space is not required in back of assemblies such as dead-front switchboards or motor control centers where there are no renewable or adjustable parts such as fuses or switches on the back and where all connections are accessible from locations other than the back.

Table I-1
Working Clearances

Nominal Voltage to Ground	Minimum Clear Distance for Conditions [1]		
	(a)	(b)	(c)
	Feet [2]	Feet [2]	Feet [2]
0-150	3	3	3
151-600	3	3 1/2	4

[1] Conditions (a), (b), and (c) are as follows: (a) Exposed live parts on one side and no live or grounded parts on the other side of the working space, or exposed live parts on both sides effectively guarded by insulating material. Insulated wire or insulated busbars operating at not over 300 volts are not considered live parts. (b) Exposed live parts on one side and grounded parts on the other side. (c) Exposed live parts on both sides of the workspace not guarded provided in condition (a) with the operator between.

[2] Note: For International System of Units (S1): One foot=0.3048m.

(ii) Clear spaces. Working space required by this part shall not be used for storage. When normally enclosed live parts are exposed for inspection or servicing, the working space, if in a passageway or general open space, shall be guarded.

(iii) Access and entrance to working space. At least one entrance shall be provided to give access to the working space about electric equipment.

(iv) Front working space. Where there are live parts normally exposed on the front of switchboards or motor control centers, the working space in front of such equipment shall not be less than three feet (914 mm).

(v) Headroom. The minimum headroom of working spaces about service equipment, switchboards, panelboards, or motor control centers shall be six feet three inches (1.91 m).

(b) Guarding of live parts.

(i) Except as required or permitted elsewhere in this part, live parts of electric equipment operating at 50 volts or more shall be guarded against accidental contact by cabinets or other forms of enclosures, or by any of the following means:

(A) By location in a room, vault, or similar enclosure that is accessible only to qualified persons.

(B) By partitions or screens so arranged that only qualified persons will have access to the space within reach of the live parts. Any openings in such partitions or screens shall be so sized and located that persons are not likely to come into accidental contact with the live parts or to bring conducting objects into contact with them.

(C) By location on a balcony, gallery, or platform so elevated and arranged as to exclude unqualified persons.

(D) By elevation of eight feet (2.44 m) or more above the floor or other working surface and so installed as to exclude unqualified persons.

(ii) In locations where electric equipment would be exposed to physical damage, enclosures or guards shall be so arranged and of such strength as to prevent such damage.

(iii) Entrances to rooms and other guarded locations containing exposed live parts shall be marked with conspicuous warning signs forbidding unqualified persons to enter.

(11) Over 600 volts, nominal.

(a) General. Conductors and equipment used on circuits exceeding 600 volts, nominal, shall comply with all applicable provisions of subsections (1) through (7) of this section and with the following provisions which supplement or modify those requirements. The provisions of (b), (c), and (d) of this subsection do not apply to equipment on the supply side of the service conductors.

(b) Enclosure for electrical installations. Electrical installations in a vault, room, closet or in an area surrounded by a wall, screen, or fence, access to which is controlled by lock and key or other equivalent means, are considered to be accessible to qualified persons only. A wall, screen, or fence less than eight feet (2.44 m) in height is not considered adequate to prevent access unless it has other features that provide a degree of isolation equivalent to an eight-foot (2.44 m) fence. The entrances to all buildings, rooms or enclosures containing exposed live parts or exposed conductors operating at over 600 volts, nominal, shall be kept locked or shall be under the observation of a qualified person at all times.

(i) Installations accessible to qualified persons only. Electrical installations having exposed live parts shall be accessible to qualified persons only and shall comply with the applicable provisions of (c) of this subsection.

(ii) Installations accessible to unqualified persons. Electrical installations that are open to unqualified persons shall be made with metal-enclosed equipment or shall be enclosed in a vault or in an area, access to which is controlled by a lock. Metal-enclosed switchgear, unit substations, transformers, pull boxes, connection boxes, and other similar associated equipment shall be marked with appropriate caution signs. If equipment is exposed to physical damage from vehicular traffic, guards shall be provided to prevent such damage. Ventilating or similar openings in metal-enclosed equipment shall be designed so that foreign objects inserted through these openings will be deflected from energized parts.

(c) Workspace about equipment. Sufficient space shall be provided and maintained about electric equipment to permit ready and safe operation and maintenance of such equip-

ment. Where energized parts are exposed, the minimum clear workspace shall not be less than six feet six inches (1.98 m) high (measured vertically from the floor or platform,) or less than three feet (914 mm) wide (measured parallel to the equipment.) The depth shall be as required in Table I-2. The workspace shall be adequate to permit at least a ninety degree opening of doors or hinged panels.

(i) Working space. The minimum clear working space in front of electric equipment such as switchboards, control panels, switches, circuit breakers, motor controllers, relays, and similar equipment shall not be less than specified in Table I-2 unless otherwise specified in this part. Distances shall be measured from the live parts if they are exposed, or from the enclosure front or opening if the live parts are enclosed. However, working space is not required in back of equipment such as deadfront switchboards or control assemblies where there are no renewable or adjustable parts (such as fuses or switches) on the back and where all connections are accessible from locations other than the back. Where rear access is required to work on de-energized parts on the back of enclosed equipment, a minimum working space of thirty inches (762 mm) horizontally shall be provided.

Table I-2
Minimum Depth of Clear Working Space in Front of Electric Equipment

Nominal Voltage to Ground	Minimum Clear Distance for Conditions [1]		
	(a)	(b)	(c)
	Feet [2]	Feet [2]	Feet [2]
601 to 2,500	3	4	5
2,501 to 9,000	4	5	6
9,001 to 25,000	5	6	9
25,001 to 75kV	6	8	10
Above 75kV	8	10	12

[1] Conditions (a), (b), and (c) are as follows: (a) Exposed live parts on one side and no live or grounded parts on the other side of the working space, or exposed live parts on both sides effectively guarded by insulating materials. Insulated wire or insulated busbars operating at not over 300 volts are not considered live parts. (b) Exposed live parts on one side and grounded parts on the other side. Walls constructed of concrete, brick, or the tile are considered to be grounded surfaces. (c) Exposed live parts on both sides of the workspace (not guarded as provided in Condition (a)) with the operator between.

[2] Note: For S1 units: One foot = 0.3048m.

(ii) Lighting outlets and points of control. The lighting outlets shall be so arranged that persons changing lamps or making repairs on the lighting system will not be endangered by live parts or other equipment. The points of control shall be so located that persons are not likely to come in contact with any live part or moving part of the equipment while turning on the lights.

(iii) Elevation of unguarded live parts. Unguarded live parts above working space shall be maintained at elevations not less than specified in Table I-3.

Table I-3
Elevation of Unguarded Energized Parts Above Working Space

Nominal Voltage to Between Phases	Minimum Elevation
601 to 7,500	8 feet 6 inches[1]
7,501 to 35,000	9 feet
Over 35kV	9 feet + 0.37 inches per kV above 35kV

[1] Note: For S1 units: One inch = 25.4mm, one foot = 0.3048m.

(d) Entrance and access to workspace. At least one entrance not less than twenty-four inches (610 mm) wide and six feet six inches (1.98 m) high shall be provided to give access to the working space about electric equipment. On switchboard and control panels exceeding forty-eight inches (1.22 m) in width, there shall be one entrance at each end of such board where practicable. Where bare energized parts at any voltage or insulated energized parts above 600 volts are located adjacent to such entrance, they shall be guarded.

(12) Welding and cutting equipment. Welding and cutting equipment shall meet the requirements specified in Parts D and H of this chapter.

[Statutory Authority: Chapter 49.17 RCW. WSR 93-19-142 (Order 93-04), § 296-155-444, filed 9/22/93, effective 11/1/93; WSR 92-23-017 (Order 92-13), § 296-155-444, filed 11/10/92, effective 12/18/92; WSR 88-11-021 (Order 88-04), § 296-155-444, filed 5/11/88.]

WAC 296-155-447 Wiring design and protection. (1) Use and identification of grounded and grounding conductors.

(a) Identification of conductors. A conductor used as a grounded conductor shall be identifiable and distinguishable from all other conductors. A conductor used as an equipment grounding conductor shall be identifiable and distinguishable from all other conductors.

(b) Polarity of connections. No grounded conductor shall be attached to any terminal or lead so as to reverse designated polarity.

(c) Use of grounding terminals and devices. A grounding terminal or grounding-type device on a receptacle, cord connector, or attachment plug shall not be used for purposes other than grounding.

(2) Branch circuits.

(a) Ground-fault protection.

(i) General. The employer shall use either ground-fault circuit interrupters as specified in (a)(ii) of this subsection or an assured equipment grounding conductor program as specified in (a)(iii) of this subsection to protect employees on construction sites. These requirements are in addition to any other requirements for equipment grounding conductors.

(ii) Ground-fault circuit interrupters. All 120-volt, single-phase, 15-ampere and 20-ampere receptacle outlets on construction sites, which are not a part of the permanent wiring of the building or structure and which are in use by employees, shall have approved ground-fault circuit interrupters for personnel protection. Receptacles on a two-wire, single-phase portable or vehicle-mounted generator rated not

more than 5kW, where the circuit conductors of the generator are insulated from the generator frame and all other grounded surfaces, need not be protected with ground-fault circuit interrupters.

(iii) Assured equipment grounding conductor program. The employer shall establish and implement an assured equipment grounding conductor program on construction sites covering all cord sets, receptacles which are not a part of the building or structure, and equipment connected by cord and plug which are available for use or used by employees. This program shall comply with the following minimum requirements:

(A) A written description of the program, including the specific procedures adopted by the employer, shall be available at the jobsite for inspection and copying by the director and any affected employee.

(B) The employer shall designate one or more competent persons (as defined in WAC 296-155-012(4)) to implement the program, and to perform continuing tests and inspections as required.

(C) Each cord set, attachment cap, plug and receptacle of cord sets, and any equipment connected by cord and plug, except cord sets and receptacles which are fixed and not exposed to damage, shall be visually inspected before each day's use for external defects, such as deformed or missing pins or insulation damage, and for indications of possible internal damage. Equipment found damaged or defective shall not be used until repaired.

(D) The following tests shall be performed on all cord sets, receptacles which are not a part of the permanent wiring of the building or structure, and cord-connected and plug-connected equipment required to be grounded:

(I) All equipment grounding conductors shall be tested for continuity and shall be electrically continuous.

(II) Each receptacle and attachment cap or plug shall be tested for correct attachment of the equipment grounding conductor. The equipment grounding conductor shall be connected to its proper terminal.

(III) Each outlet receptacle, or power source shall be tested to ensure proper polarity.

(E) All required tests shall be performed:

(I) Before first use;

(II) Before equipment is returned to service following any repairs;

(III) Before equipment is used after any incident which can be reasonably suspected to have caused damage (for example, when a cord set is run over); and

(IV) At intervals not to exceed three months, except that cord sets and receptacles which are fixed and not exposed to damage shall be tested at intervals not exceeding 6 months.

(F) The employer shall not make available or permit the use by employees of any equipment which has not met the requirements of (a)(iii) of this subsection.

(G) Tests performed as required in this subsection shall be recorded. This test record shall identify each receptacle, cord set, and cord-connected and plug-connected equipment that passed the test and shall indicate the last date it was tested or the interval for which it was tested. This record shall be kept by means of logs, color coding, or other effective means and shall be maintained until replaced by a more current record. The record shall be made available on the jobsite for inspection by the director and any affected employee.

(b) Outlet devices. Outlet devices shall have an ampere rating not less than the load to be served and shall comply with the following:

(i) Single receptacles. A single receptacle installed on an individual branch circuit shall have an ampere rating of not less than that of the branch circuit.

(ii) Two or more receptacles. Where connected to a branch circuit supplying two or more receptacles or outlets, receptacle ratings shall conform to the values listed in Table I-4.

(iii) Receptacles used for the connection of motors. The rating of an attachment plug or receptacle used for cord-connection and plug-connection of a motor to a branch circuit shall not exceed 15 amperes at 125 volts or 10 amperes at 250 volts if individual overload protection is omitted.

Table I-4
Receptacle Ratings for Various Size Circuits

Circuit Rating Amperes	Receptacle Rating Amperes
15	Not Over 15
20	15 or 20
30	30
40	40 or 50
50	50

(3) Outside conductors and lamps.

(a) 600 volts, nominal, or less. (a)(i) through (iv)(D) of this subsection apply to branch circuit, feeder, and service conductors rated 600 volts, nominal, or less and run outdoors as open conductors.

(i) Conductors on poles. Conductors supported on poles shall provide a horizontal climbing space not less than the following:

(A) Power conductors below communication conductors: 30 inches (762 mm).

(B) Power conductors alone or above communication conductors: 300 volts or less—24 inches (610 mm); more than 300 volts—30 inches (762 mm).

(C) Communication conductors below power conductors: With power conductors 300 volts or less—24 inches (610 mm); more than 300 volts—30 inches (762 mm).

(ii) Clearance from ground. Open conductors shall conform to the following minimum clearances:

(A) 10 feet (3.05 m)—above finished grade, sidewalks, or from any platform or projection from which they might be reached.

(B) 12 feet (3.66 m)—over areas subject to vehicular traffic other than truck traffic.

(C) 15 feet (4.57 m)—over areas other than those specified in (a)(ii)(D) of this subsection that are subject to truck traffic.

(D) 18 feet (5.49 m)—over public streets, alleys, roads, and driveways.

(iii) Clearance from building openings. Conductors shall have a clearance of at least 3 feet (914 mm) from windows, doors, fire escapes, or similar locations. Conductors run above the top level of a window are considered to be out of reach from that window and, therefore, do not have to be 3 feet (914 mm) away.

(iv) Clearance over roofs. Conductors above roof space accessible to employees on foot shall have a clearance from the highest point of the roof surface of not less than 8 feet (2.44 m) vertical clearance for insulated conductors, not less than 10 feet (3.05 m) vertical or diagonal clearance for covered conductors, and not less than 15 feet (4.57 m) for bare conductors, except that:

(A) Where the roof space is also accessible to vehicular traffic, the vertical clearance shall not be less than 18 feet (5.49 m); or

(B) Where the roof space is not normally accessible to employees on foot, fully insulated conductors shall have a vertical or diagonal clearance of not less than 3 feet (914 mm); or

(C) Where the voltage between conductors is 300 volts or less and the roof has a slope of not less than 4 inches (102 mm) in 12 inches (305 mm), the clearance from roofs shall be at least 3 feet (914 mm); or

(D) Where the voltage between conductors is 300 volts or less and the conductors do not pass over more than 4 feet (1.22 m) of the overhang portion of the roof and they are terminated at a through-the-roof raceway or support, the clearance from roofs shall be at least 18 inches (457 mm).

(b) Location of outdoor lamps. Lamps for outdoor lighting shall be located below all live conductors, transformers, or other electric equipment, unless such equipment is controlled by a disconnecting means that can be locked in the open position or unless adequate clearances or other safeguards are provided for relamping operations.

(4) Services.

(a) Disconnecting means.

(i) General. Means shall be provided to disconnect all conductors in a building or other structure from the service-entrance conductors. The disconnecting means shall plainly indicate whether it is in the open or closed position and shall be installed at a readily accessible location nearest the point of entrance of the service-entrance conductors.

(ii) Simultaneous opening of poles. Each service disconnecting means shall simultaneously disconnect all ungrounded conductors.

(b) Services over 600 volts, nominal. The following additional requirements apply to services over 600 volts, nominal.

(i) Guarding. Service-entrance conductors installed as open wires shall be guarded to make them accessible only to qualified persons.

(ii) Warning signs. Signs warning of high voltage shall be posted where unauthorized employees might come in contact with live parts.

(5) Overcurrent protection.

(a) 600 volts, nominal, or less. The following requirements apply to overcurrent protection of circuits rated 600 volts, nominal, or less.

(i) Protection of conductors and equipment. Conductors and equipment shall be protected from overcurrent in accordance with their ability to safely conduct current. Conductors shall have sufficient ampacity to carry the load.

(ii) Grounded conductors. Except for motor-running overload protection, overcurrent devices shall not interrupt the continuity of the grounded conductor unless all conductors of the circuit are opened simultaneously.

(iii) Disconnection of fuses and thermal cutouts. Except for devices provided for current-limiting on the supply side of the service disconnecting means, all cartridge fuses which are accessible to other than qualified persons and all fuses and thermal cutouts on circuits over 150 volts to ground shall be provided with disconnecting means. This disconnecting means shall be installed so that the fuse or thermal cutout can be disconnected from its supply without disrupting service to equipment and circuits unrelated to those protected by the overcurrent device.

(iv) Location in or on premises. Overcurrent devices shall be readily accessible. Overcurrent devices shall not be located where they could create an employee safety hazard by being exposed to physical damage or located in the vicinity of easily ignitible material.

(v) Arcing or suddenly moving parts. Fuses and circuit breakers shall be so located or shielded that employees will not be burned or otherwise injured by their operation.

(vi) Circuit breakers.

(A) Circuit breakers shall clearly indicate whether they are in the open (off) or closed (on) position.

(B) Where circuit breaker handles on switchboards are operated vertically rather than horizontally or rotationally, the up position of the handle shall be the closed (on) position.

(C) If used as switches in 120-volt, fluorescent lighting circuits, circuit breakers shall be marked "SWD."

(b) Over 600 volts, nominal. Feeders and branch circuits over 600 volts, nominal, shall have short-circuit protection.

(6) Effective grounding. The path from circuits, equipment, structures, and conduit or enclosures to ground shall be permanent and continuous; have ample carrying capacity to conduct safely the currents liable to be imposed on it; and have the impedance sufficiently low to limit the potential above ground and to result in the operation of the overcurrent devices in the circuit. (a) through (k) of this subsection contain grounding requirements for systems, circuits, and equipment.

(a) Systems to be grounded. The following systems which supply premises wiring shall be grounded:

(i) Three-wire DC systems. All three-wire DC systems shall have their neutral conductor grounded.

(ii) Two-wire DC systems. Two-wire DC systems operating at over 50 volts through 300 volts between conductors shall be grounded unless they are rectifier-derived from an AC system complying with (a)(iii), (iv), and (v) of this subsection.

(iii) AC circuits, less than 50 volts. AC circuits of less than 50 volts shall be grounded if they are installed as overhead conductors outside of buildings or if they are supplied by transformers and the transformer primary supply system is ungrounded or exceeds 150 volts to ground.

(iv) AC systems, 50 volts to 1000 volts. AC systems of 50 volts to 1000 volts shall be grounded under any of the following conditions, unless exempted by (a)(v) of this subsection:

(A) If the system can be so grounded that the maximum voltage to ground on the ungrounded conductors does not exceed 150 volts;

(B) If the system is nominally rated 480Y/277 volt, 3-phase, 4-wire in which the neutral is used as a circuit conductor;

(C) If the system is nominally rated 240/120 volt, 3-phase, 4-wire in which the midpoint of one phase is used as a circuit conductor; or

(D) If a service conductor is uninsulated.

(v) Exceptions. AC systems of 50 volts to 1000 volts are not required to be grounded if the system is separately derived and is supplied by a transformer that has a primary voltage rating less than 1000 volts, provided all of the following conditions are met:

(A) The system is used exclusively for control circuits;

(B) The conditions of maintenance and supervision assure that only qualified persons will service the installation;

(C) Continuity of control power is required; and

(D) Ground detectors are installed on the control system.

(b) Separately derived systems. Where (a) of this subsection requires grounding of wiring systems whose power is derived from generator, transformer, or converter windings and has no direct electrical connection, including a solidly connected grounded circuit conductor, to supply conductors originating in another system, (e) of this subsection shall also apply.

(c) Portable and vehicle-mounted generators.

(i) Portable generators. Under the following conditions, the frame of a portable generator need not be grounded and may serve as the grounding electrode for a system supplied by the generator:

(A) The generator supplies only equipment mounted on the generator and/or cord-connected and plug-connected equipment through receptacles mounted on the generator; and

(B) The noncurrent-carrying metal parts of equipment and the equipment grounding conductor terminals of the receptacles are bonded to the generator frame.

(ii) Vehicle-mounted generators. Under the following conditions the frame of a vehicle may serve as the grounding electrode for a system supplied by a generator located on the vehicle:

(A) The frame of the generator is bonded to the vehicle frame; and

(B) The generator supplies only equipment located on the vehicle and/or cord-connected and plug-connected equipment through receptacles mounted on the vehicle or on the generator; and

(C) The noncurrent-carrying metal parts of equipment and the equipment grounding conductor terminals of the receptacles are bonded to the generator frame; and

(D) The system complies with all other provisions of this section.

(iii) Neutral conductor bonding. A neutral conductor shall be bonded to the generator frame if the generator is a component of a separately derived system. No other conductor need be bonded to the generator frame.

(d) Conductors to be grounded. For AC premises wiring systems the identified conductor shall be grounded.

(e) Grounding connections.

(i) Grounded system. For a grounded system, a grounding electrode conductor shall be used to connect both the equipment grounding conductor and the grounded circuit conductor to the grounding electrode. Both the equipment grounding conductor and the grounding electrode conductor shall be connected to the grounded circuit conductor on the supply side of the service disconnecting means, or on the supply side of the system disconnecting means or overcurrent devices if the system is separately derived.

(ii) Ungrounded systems. For an ungrounded service-supplied system, the equipment grounding conductor shall be connected to the grounding electrode conductor at the service equipment. For an ungrounded separately derived system, the equipment grounding conductor shall be connected to the grounding electrode conductor at, or ahead of, the system disconnecting means or overcurrent devices.

(f) Grounding path. The path to ground from circuits, equipment, and enclosures shall be permanent and continuous.

(g) Supports, enclosures, and equipment to be grounded.

(i) Supports and enclosures for conductors. Metal cable trays, metal raceways, and metal enclosures for conductors shall be grounded, except that:

(A) Metal enclosures such as sleeves that are used to protect cable assemblies from physical damage need not be grounded; and

(B) Metal enclosures for conductors added to existing installations of open wire, knob-and-tube wiring, and nonmetallic-sheathed cable need not be grounded if all of the following conditions are met:

(I) Runs are less than 25 feet (7.62 m);

(II) Enclosures are free from probable contact with ground, grounded metal, metal laths, or other conductive materials; and

(III) Enclosures are guarded against employee contact.

(ii) Service equipment enclosures. Metal enclosures for service equipment shall be grounded.

(iii) Fixed equipment. Exposed noncurrent-carrying metal parts of fixed equipment which may become energized shall be grounded under any of the following conditions:

(A) If within 8 feet (2.44 m) vertically or 5 feet (1.52 m) horizontally of ground or grounded metal objects and subject to employee contact.

(B) If located in a wet or damp location and subject to employee contact.

(C) If in electrical contact with metal.

(D) If in a hazardous (classified) location.

(E) If supplied by a metal-clad, metal-sheathed, or grounded metal raceway wiring method.

(F) If equipment operates with any terminal at over 150 volts to ground; however, the following need not be grounded:

(I) Enclosures for switches or circuit breakers used for other than service equipment and accessible to qualified persons only;

(II) Metal frames of electrically heated appliances which are permanently and effectively insulated from ground; and

(III) The cases of distribution apparatus such as transformers and capacitors mounted on wooden poles at a height exceeding 8 feet (2.44 m) above ground or grade level.

(iv) Equipment connected by cord and plug. Under any of the conditions described in (g)(iv) (A) through (C) of this subsection, exposed noncurrent-carrying metal parts of cord-connected and plug-connected equipment which may become energized shall be grounded:

(A) If in a hazardous (classified) location (see WAC 296-155-444).

(B) If operated at over 150 volts to ground, except for guarded motors and metal frames of electrically heated appliances if the appliance frames are permanently and effectively insulated from ground.

(C) If the equipment is one of the types listed in (g)(iv)(C)(I) through (V) of this subsection. However, even though the equipment may be one of these types, it need not be grounded if it is exempted by (g)(iv)(C)(VI) of this subsection.

(I) Hand held motor-operated tools;

(II) Cord-connected and plug-connected equipment used in damp or wet locations or by employees standing on the ground or on metal floors or working inside of metal tanks or boilers;

(III) Portable and mobile X ray and associated equipment;

(IV) Tools likely to be used in wet and/or conductive locations; and

(V) Portable hand lamps.

(VI) Tools likely to be used in wet and/or conductive locations need not be grounded if supplied through an isolating transformer with an ungrounded secondary of not over 50 volts. Listed or labeled portable tools and appliances protected by a system of double insulation, or its equivalent, need not be grounded. If such a system is employed, the equipment shall be distinctively marked to indicate that the tool or appliance utilizes a system of double insulation.

(v) Nonelectrical equipment. The metal parts of the following nonelectrical equipment shall be grounded: Frames and tracks of electrically operated cranes; frames of nonelectrically driven elevator cars to which electric conductors are attached; hand-operated metal shifting ropes or cables of electric elevators, and metal partitions, grill work, and similar metal enclosures around equipment of over IkV between conductors.

(h) Methods of grounding equipment.

(i) With circuit conductors. Noncurrent-carrying metal parts of fixed equipment, if required to be grounded by this part, shall be grounded by an equipment grounding conductor which is contained within the same raceway, cable, or cord, or runs with or encloses the circuit conductors. For DC circuits only, the equipment grounding conductor may be run separately from the circuit conductors.

(ii) Grounding conductor. A conductor used for grounding fixed or movable equipment shall have capacity to conduct safely any fault current which may be imposed on it.

(iii) Equipment considered effectively grounded. Electric equipment is considered to be effectively grounded if it is secured to, and in electrical contact with, a metal rack or structure that is provided for its support and the metal rack or structure is grounded by the method specified for the noncurrent-carrying metal parts of fixed equipment in (h)(i) of this subsection. Metal car frames supported by metal hoisting cables attached to or running over metal sheaves or drums of grounded elevator machines are also considered to be effectively grounded.

(i) Bonding.

(i) If bonding conductors are used to assure electrical continuity, they shall have the capacity to conduct any fault current which may be imposed.

(ii) When attaching bonding and grounding clamps or clips, a secure and positive metal-to-metal contact shall be made. Such attachments shall be made before closures are opened and material movements are started and shall not be broken until after material movements are stopped and closures are made.

(j) Made electrodes. If made electrodes are used, they shall be free from nonconductive coatings, such as paint or enamel; and, if practicable, they shall be embedded below permanent moisture level. A single electrode consisting of a rod, pipe or plate which has a resistance to ground greater than 25 ohms shall be augmented by one additional electrode installed no closer than 6 feet (1.83 m) to the first electrode.

(k) Grounding of systems and circuits of 1000 volts and over (high voltage).

(i) General. If high voltage systems are grounded, they shall comply with all applicable provisions of (a) through (j) of this subsection as supplemented and modified by (k) of this subsection.

(ii) Grounding of systems supplying portable or mobile equipment. Systems supplying portable or mobile high voltage equipment, other than substations installed on a temporary basis, shall comply with the following:

(A) Portable and mobile high voltage equipment shall be supplied from a system having its neutral grounded through an impedance. If a delta-connected high voltage system is used to supply the equipment, a system neutral shall be derived.

(B) Exposed noncurrent-carrying metal parts of portable and mobile equipment shall be connected by an equipment grounding conductor to the point at which the system neutral impedance is grounded.

(C) Ground-fault detection and relaying shall be provided to automatically deenergize any high voltage system component which has developed a ground fault. The continuity of the equipment grounding conductor shall be continuously monitored so as to de-energize automatically the high voltage feeder to the portable equipment upon loss of continuity of the equipment grounding conductor.

(D) The grounding electrode to which the portable or mobile equipment system neutral impedance is connected shall be isolated from and separated in the ground by at least 20 feet (6.1 m) from any other system or equipment grounding electrode, and there shall be no direct connection between the grounding electrodes, such as buried pipe, fence or like objects.

(iii) Grounding of equipment. All noncurrent-carrying metal parts of portable equipment and fixed equipment including their associated fences, housings, enclosures, and supporting structures shall be grounded. However, equipment which is guarded by location and isolated from ground need not be grounded. Additionally, pole-mounted distribution apparatus at a height exceeding 8 feet (2.44 m) above ground or grade level need not be grounded.

[Statutory Authority: Chapter 49.17 RCW. WSR 93-19-142 (Order 93-04), § 296-155-447, filed 9/22/93, effective 11/1/93; WSR 88-11-021 (Order 88-04), § 296-155-447, filed 5/11/88.]

WAC 296-155-449 Wiring methods, components, and equipment for general use. (1) Wiring methods. The provisions of this subsection do not apply to conductors which form an integral part of equipment such as motors, controllers, motor control centers and like equipment.

(a) General requirements.

(i) Electrical continuity of metal raceways and enclosures. Metal raceways, cable armor, and other metal enclosures for conductors shall be metallically joined together into a continuous electric conductor and shall be so connected to all boxes, fittings, and cabinets as to provide effective electrical continuity.

(ii) Wiring in ducts. No wiring systems of any type shall be installed in ducts used to transport dust, loose stock or flammable vapors. No wiring system of any type shall be installed in any duct used for vapor removal or in any shaft containing only such ducts.

(iii) Receptacles for attachment plugs shall be approved, concealed contact type with a contact for extending ground continuity and shall be so designed and constructed that the plug may be pulled out without leaving any live parts exposed to accidental contact. All temporary outlet boxes shall be of a type suitable for use in wet or damp locations.

(iv) Attachment plugs or other connectors supplying equipment at more than 300 volts shall be of the skirted type or otherwise so designed that arcs will be confined.

(b) Temporary wiring.

(i) Scope. The provisions of (b) of this subsection apply to temporary electrical power and lighting wiring methods which may be of a class less than would be required for a permanent installation. Except as specifically modified in (b) of this subsection, all other requirements of this part for permanent wiring shall apply to temporary wiring installations. Temporary wiring shall be removed immediately upon completion of construction or the purpose for which the wiring was installed.

(ii) General requirements for temporary wiring.

(A) Feeders shall originate in a distribution center. The conductors shall be run as multiconductor cord or cable assemblies or within raceways; or, where not subject to physical damage, they may be run as open conductors on insulators not more than ten feet (3.05 m) apart.

(B) Branch circuits shall originate in a power outlet or panelboard. Conductors shall be run as multiconductor cord or cable assemblies or open conductors, or shall be run in raceways. All conductors shall be protected by overcurrent devices at their ampacity. Runs of open conductors shall be located where the conductors will not be subject to physical damage, and the conductors shall be fastened at intervals not exceeding ten feet (3.05 m). No branch-circuit conductors shall be laid on the floor. Each branch circuit that supplies receptacles or fixed equipment shall contain a separate equipment grounding conductor if the branch circuit is run as open conductors.

(C) Receptacles shall be of the grounding type. Unless installed in a complete metallic raceway, each branch circuit shall contain a separate equipment grounding conductor, and all receptacles shall be electrically connected to the grounding conductor. Receptacles for uses other than temporary lighting shall not be installed on branch circuits which supply temporary lighting. Receptacles shall not be connected to the same ungrounded conductor of multiwire circuits which supply temporary lighting.

(D) Disconnecting switches or plug connectors shall be installed to permit the disconnection of all ungrounded conductors of each temporary circuit.

(E) All lamps for general illumination shall be protected from accidental contact or breakage. Metal-case sockets shall be grounded.

(F) Temporary lights shall be equipped with hard usage (S or SJ types) electric cords with connections and insulation maintained in safe condition. "Brewery" cord (type CBO or NB) may be substituted for hard usage cord provided it is protected from physical damages. Temporary lights shall not be suspended by their electric cords unless cords and lights are designed for this means of suspension. Splices shall retain the insulation, outer sheath properties, flexibility, and usage characteristics of the cord being spliced.

When pin-type connectors or lampholders are utilized, the area of perforations caused by lampholder removal shall be restored to the insulation capabilities of the cord.

(G) Portable electric lighting used in wet and/or other conductive locations, as for example, drums, tanks, and vessels, shall be operated at 12 volts or less. However, 120-volt lights may be used if protected by a ground-fault circuit interrupter.

(H) A box shall be used wherever a change is made to a raceway system or a cable system which is metal clad or metal sheathed.

(I) Flexible cords and cables shall be protected from damage. Sharp corners and projections shall be avoided. Flexible cords and cables may pass through doorways or other pinch points, if protection is provided to avoid damage.

(J) Extension cord sets used with portable electric tools and appliances shall be of three-wire type and shall be designed for hard or extra-hard usage. Flexible cords used with temporary and portable lights shall be designed for hard or extra-hard usage.

Note: The National Electrical Code, ANSI/NFPA 70, in Article 400, Table 400-4, lists various types of flexible cords, some of which are noted as being designed for hard or extra-hard usage. Examples of these types of flexible cords include hard service cord (types S, ST, SO, STO) and junior hard service cord (types SJ, SJO, SJT, SJTO).

(iii) Guarding. For temporary wiring over 600 volts, nominal, fencing, barriers, or other effective means shall be provided to prevent access of other than authorized and qualified personnel.

(2) Cabinets, boxes, and fittings.

(a) Conductors entering boxes, cabinets, or fittings. Conductors entering boxes, cabinets, or fittings shall be protected from abrasion, and openings through which conductors enter shall be effectively closed. Unused openings in cabinets, boxes, and fittings shall also be effectively closed.

(b) Covers and canopies. All pull boxes, junction boxes, and fittings shall be provided with covers. If metal covers are used, they shall be grounded. In energized installations each outlet box shall have a cover, faceplate, or fixture canopy.

Covers of outlet boxes having holes through which flexible cord pendants pass shall be provided with bushings designed for the purpose or shall have smooth, well-rounded surfaces on which the cords may bear.

(c) Pull and junction boxes for systems over 600 volts, nominal. In addition to other requirements in this section for pull and junction boxes, the following shall apply to these boxes for systems over 600 volts, nominal:

(i) Complete enclosure. Boxes shall provide a complete enclosure for the contained conductors or cables.

(ii) Covers. Boxes shall be closed by covers securely fastened in place. Underground box covers that weigh over 100 pounds (43.6 kg) meet this requirement. Covers for boxes shall be permanently marked "HIGH VOLTAGE." The marking shall be on the outside of the box cover and shall be readily visible and legible.

(3) Knife switches. Single-throw knife switches shall be so connected that the blades are dead when the switch is in the open position. Single-throw knife switches shall be so placed that gravity will not tend to close them. Single-throw knife switches approved for use in the inverted position shall be provided with a locking device that will ensure that the blades remain in the open position when so set. Double-throw knife switches may be mounted so that the throw will be either vertical or horizontal. However, if the throw is vertical, a locking device shall be provided to ensure that the blades remain in the open position when so set.

(4) Switchboards and panelboards. Switchboards that have any exposed live parts shall be located in permanently dry locations and accessible only to qualified persons. Panelboards shall be mounted in cabinets, cutout boxes, or enclosures designed for the purpose and shall be dead front. However, panelboards other than the dead front externally-operable type are permitted where accessible only to qualified persons. Exposed blades of knife switches shall be dead when open.

(5) Enclosures for damp or wet locations.

(a) Cabinets, fittings, and boxes. Cabinets, cutout boxes, fittings, boxes, and panelboard enclosures in damp or wet locations shall be installed so as to prevent moisture or water from entering and accumulating within the enclosures. In wet locations the enclosures shall be weatherproof.

(b) Switches and circuit breakers. Switches, circuit breakers, and switchboards installed in wet locations shall be enclosed in weatherproof enclosures.

(6) Conductors for general wiring. All conductors used for general wiring shall be insulated unless otherwise permitted in this part. The conductor insulation shall be of a type that is suitable for the voltage, operating temperature, and location of use. Insulated conductors shall be distinguishable by appropriate color or other means as being grounded conductors, ungrounded conductors, or equipment grounding conductors.

(7) Flexible cords and cables.

(a) Use of flexible cords and cables.

(i) Permitted uses. Flexible cords and cables shall be suitable for conditions of use and location. Flexible cords and cables shall be used only for:

(A) Pendants;

(B) Wiring of fixtures;

(C) Connection of portable lamps or appliances;

(D) Elevator cables;

(E) Wiring of cranes and hoists;

(F) Connection of stationary equipment to facilitate their frequent interchange;

(G) Prevention of the transmission of noise or vibration; or

(H) Appliances where the fastening means and mechanical connections are designed to permit removal for maintenance and repair.

(ii) Attachment plugs for cords. If used as permitted in (a)(i)(C), (F), or (H) of this subsection, the flexible cord shall be equipped with an attachment plug and shall be energized from a receptacle outlet.

(iii) Prohibited uses. Unless necessary for a use permitted in (a)(i) of this subsection, flexible cords and cables shall not be used:

(A) As a substitute for the fixed wiring of a structure;

(B) Where run through holes in walls, ceilings, or floors;

(C) Where run through doorways, windows, or similar openings, except as permitted in subsection (1)(b)(ii)(I) of this section;

(D) Where attached to building surfaces; or

(E) Where concealed behind building walls, ceilings, or floors.

(b) Identification, splices, and terminations.

(i) Identification. A conductor of a flexible cord or cable that is used as a grounded conductor or an equipment grounding conductor shall be distinguishable from other conductors.

(ii) Marking. Type SJ, SJO, SJT, SJTO, S, SO, ST, and STO cords shall not be used unless durably marked on the surface with the type designation, size, and number of conductors.

(iii) Splices. Flexible cords shall be used only in continuous lengths without splice or tap. Hard service flexible cords No. 12 or larger may be repaired if spliced so that the splice retains the insulation, outer sheath properties, and usage characteristics of the cord being spliced.

(iv) Strain relief. Flexible cords shall be connected to devices and fittings so that strain relief is provided which will prevent pull from being directly transmitted to joints or terminal screws.

(v) Cords passing through holes. Flexible cords and cables shall be protected by bushings or fittings where passing through holes in covers, outlet boxes, or similar enclosures.

(vi) Trailing cables shall be protected from damage.

(vii) Cord and cable passing through work areas shall be covered or elevated to protect it from damage which would create a hazard to employees.

(8) Portable cables over 600 volts, nominal. Multiconductor portable cable for use in supplying power to portable or mobile equipment at over 600 volts, nominal, shall consist of No. 8 or larger conductors employing flexible stranding. Cables operated at over 2000 volts shall be shielded for the purpose of confining the voltage stresses to the insulation. Grounding conductors shall be provided. Connectors for these cables shall be of a locking type with provisions to prevent their opening or closing while energized. Strain relief shall be provided at connections and terminations. Portable cables shall not be operated with splices unless the splices are of the permanent molded, vulcanized, or other equivalent

type. Termination enclosures shall be marked with a high voltage hazard warning, and terminations shall be accessible only to authorized and qualified personnel.

(9) Fixture wires.

(a) General. Fixture wires shall be suitable for the voltage, temperature, and location of use. A fixture wire which is used as a grounded conductor shall be identified.

(b) Uses permitted. Fixture wires may be used:

(i) For installation in lighting, fixtures and in similar equipment where enclosed or protected and not subject to bending or twisting in use; or

(ii) For connecting lighting fixtures to the branch-circuit conductors supplying the fixtures.

(c) Uses not permitted. Fixture wires shall not be used as branch-circuit conductors except as permitted for Class 1 power-limited circuits.

(10) Equipment for general use.

(a) Lighting fixtures, lampholders, lamps, and receptacles.

(i) Live parts. Fixtures, lampholders, lamps, rosettes, and receptacles shall have no live parts normally exposed to employee contact. However, rosettes and cleat-type lampholders and receptacles located at least 8 feet (2.44 m) above the floor may have exposed parts.

(ii) Support. Fixtures, lampholders, rosettes, and receptacles shall be securely supported. A fixture that weighs more than six pounds (2.72 kg) or exceeds sixteen inches (406 mm) in any dimension shall not be supported by the screw shell of a lampholder.

(iii) Portable lamps. Portable lamps shall be wired with flexible cord and an attachment plug of the polarized or grounding type. If the portable lamp uses an Edison-based lampholder, the grounded conductor shall be identified and attached to the screw shell and the identified blade of the attachment plug. In addition, portable handlamps shall comply with the following:

(A) Metal shell, paperlined lampholders shall not be used;

(B) Handlamps shall be equipped with a handle of molded composition or other insulating material;

(C) Handlamps shall be equipped with a substantial guard attached to the lampholder or handle;

(D) Metallic guards shall be grounded by the means of an equipment grounding conductor run within the power supply cord.

(iv) Lampholders. Lampholders of the screw-shell type shall be installed for use as lampholders only. Lampholders installed in wet or damp locations shall be of the weatherproof type.

(v) Fixtures. Fixtures installed in wet or damp locations shall be identified for the purpose and shall be installed so that water cannot enter or accumulate in wireways, lampholders, or other electrical parts.

(b) Receptacles, cord connectors, and attachment plugs (caps).

(i) Configuration. Receptacles, cord connectors, and attachment plugs shall be constructed so that no receptacle or cord connector will accept an attachment plug with a different voltage or current rating than that for which the device is intended. However, a 20-ampere T-slot receptacle or cord connector may accept a 15-ampere attachment plug of the same voltage rating. Receptacles connected to circuits having different voltages, frequencies, or types of current (AC or DC) on the same premises shall be of such design that the attachment plugs used on these circuits are not interchangeable.

(ii) Damp and wet locations. A receptacle installed in a wet or damp location shall be designed for the location.

(c) Appliances.

(i) Live parts. Appliances, other than those in which the current-carrying parts at high temperatures are necessarily exposed, shall have no live parts normally exposed to employee contact.

(ii) Disconnecting means. A means shall be provided to disconnect each appliance.

(iii) Rating. Each appliance shall be marked with its rating in volts and amperes or volts and watts.

(d) Motors. This subdivision applies to motors, motor circuits, and controllers.

(i) In sight from. If specified that one piece of equipment shall be "in sight from" another piece of equipment, one shall be visible and not more than fifty feet (15.2 m) from the other.

(ii) Disconnecting means.

(A) A disconnecting means shall be located in sight from the controller location. The controller disconnecting means for motor branch circuits over 600 volts, nominal, may be out of sight of the controller, if the controller is marked with a warning label giving the location and identification of the disconnecting means which is to be locked in the open position.

(B) The disconnecting means shall disconnect the motor and the controller from all ungrounded supply conductors and shall be so designed that no pole can be operated independently.

(C) If a motor and the driven machinery are not in sight from the controller location, the installation shall comply with one of the following conditions:

(I) The controller disconnecting means shall be capable of being locked in the open position.

(II) A manually operable switch that will disconnect the motor from its source of supply shall be placed in sight from the motor location.

(D) The disconnecting means shall plainly indicate whether it is in the open (off) or closed (on) position.

(E) The disconnecting means shall be readily accessible. If more than one disconnect is provided for the same equipment, only one need be readily accessible.

(F) An individual disconnecting means shall be provided for each motor, but a single disconnecting means may be used for a group of motors under any one of the following conditions:

(I) If a number of motors drive special parts of a single machine or piece of apparatus, such as a metal or woodworking machine, crane, or hoist;

(II) If a group of motors is under the protection of one set of branch-circuit protective devices; or

(III) If a group of motors is in a single room in sight from the location of the disconnecting means.

(iii) Motor overload, short-circuit, and ground-fault protection. Motors, motor-control apparatus, and motor branch-circuit conductors shall be protected against overheating due

to motor overloads or failure to start, and against short-circuits or ground faults. These provisions do not require overload protection that will stop a motor where a shutdown is likely to introduce additional or increased hazards, as in the case of fire pumps, or where continued operation of a motor is necessary for a safe shutdown of equipment or process and motor overload sensing devices are connected to a supervised alarm.

(iv) Protection of live parts—all voltages.

(A) Stationary motors having commutators, collectors, and brush rigging located inside of motor end brackets and not conductively connected to supply circuits operating at more than 150 volts to ground need not have such parts guarded. Exposed live parts of motors and controllers operating at 50 volts or more between terminals shall be guarded against accidental contact by any of the following:

(I) By installation in a room or enclosure that is accessible only to qualified persons;

(II) By installation on a balcony, gallery, or platform, so elevated and arranged as to exclude unqualified persons; or

(III) By elevation eight feet (2.44 m) or more above the floor.

(B) Where live parts of motors or controllers operating at over 150 volts to ground are guarded against accidental contact only by location, and where adjustment or other attendance may be necessary during the operation of the apparatus, insulating mats or platforms shall be provided so that the attendant cannot readily touch live parts unless standing on the mats or platforms.

(e) Transformers.

(i) Application. The following subsections cover the installation of all transformers, except:

(A) Current transformers;

(B) Dry-type transformers installed as a component part of other apparatus;

(C) Transformers which are an integral part of an X-ray, high frequency, or electrostatic-coating apparatus;

(D) Transformers used with Class 2 and Class 3 circuits, sign and outline lighting, electric discharge lighting, and power-limited fire-protective signaling circuits.

(ii) Operating voltage. The operating voltage of exposed live parts of transformer installations shall be indicated by warning signs or visible markings on the equipment or structure.

(iii) Transformers over 35 kV. Dry-type, high fire point liquid-insulated, and askarel-insulated transformers installed indoors and rated over 35 kV shall be in a vault.

(iv) Oil-insulated transformers. If they present a fire hazard to employees, oil-insulated transformers installed indoors shall be in a vault.

(v) Fire protection. Combustible material, combustible buildings and parts of buildings, fire escapes, and door and window openings shall be safeguarded from fires which may originate in oil-insulated transformers attached to or adjacent to a building or combustible material.

(vi) Transformer vaults. Transformer vaults shall be constructed so as to contain fire and combustible liquids within the vault and to prevent unauthorized access. Locks and latches shall be so arranged that a vault door can be readily opened from the inside.

(vii) Pipes and ducts. Any pipe or duct system foreign to the vault installation shall not enter or pass through a transformer vault.

(viii) Material storage. Materials shall not be stored in transformer vaults.

(f) Capacitors.

(i) Drainage of stored charge. All capacitors, except surge capacitors or capacitors included as a component part of other apparatus, shall be provided with an automatic means of draining the stored charge and maintaining the discharged state after the capacitor is disconnected from its source of supply.

(ii) Over 600 volts. Capacitors rated over 600 volts, nominal, shall comply with the following additional requirements:

(A) Isolating or disconnecting switches (with no interrupting rating) shall be interlocked with the load interrupting device or shall be provided with prominently displayed caution signs to prevent switching load current.

(B) For series capacitors the proper switching shall be assured by use of at least one of the following:

(I) Mechanically sequenced isolating and bypass switches;

(II) Interlocks; or

(III) Switching procedure prominently displayed at the switching location.

[Statutory Authority: Chapter 49.17 RCW. WSR 93-19-142 (Order 93-04), § 296-155-449, filed 9/22/93, effective 11/1/93; WSR 92-23-017 (Order 92-13), § 296-155-449, filed 11/10/92, effective 12/18/92; WSR 88-11-021 (Order 88-04), § 296-155-449, filed 5/11/88.]

WAC 296-155-452 Specific purpose equipment and installations. (1) Cranes and hoists. This subsection applies to the installation of electric equipment and wiring used in connection with cranes, monorail hoists, hoists, and all runways.

(a) Disconnecting means.

(i) Runway conductor disconnecting means. A readily accessible disconnecting means shall be provided between the runway contact conductors and the power supply.

(ii) Disconnecting means for cranes and monorail hoists. A disconnecting means, capable of being locked in the open position, shall be provided in the leads from the runway contact conductors or other power supply on any crane or monorail hoist.

(A) If this additional disconnecting means is not readily accessible from the crane or monorail hoist operating station, means shall be provided at the operating station to open the power circuit to all motors of the crane or monorail hoist.

(B) The additional disconnect may be omitted if a monorail hoist or hand-propelled crane bridge installation meets all of the following:

(I) The unit is floor controlled;

(II) The unit is within view of the power supply disconnecting means; and

(III) No fixed work platform has been provided for servicing the unit.

(b) Control. A limit switch or other device shall be provided to prevent the load block from passing the safe upper limit of travel of any hoisting mechanism.

(c) Clearance. The dimension of the working space in the direction of access to live parts which may require examination, adjustment, servicing, or maintenance while alive shall be a minimum of two feet six inches (762 mm). Where controls are enclosed in cabinets, the door(s) shall open at least 90 degrees or be removable, or the installation shall provide equivalent access.

(d) Grounding. All exposed metal parts of cranes, monorail hoists, hoists and accessories including pendant controls shall be metallically joined together into a continuous electrical conductor so that the entire crane or hoist will be grounded in accordance with WAC 296-155-447(6). Moving parts, other than removable accessories or attachments, having metal-to-metal bearing surfaces shall be considered to be electrically connected to each other through the bearing surfaces for grounding purposes. The trolley frame and bridge frame shall be considered as electrically grounded through the bridge and trolley wheels and its respective tracks unless conditions such as paint or other insulating materials prevent reliable metal-to-metal contact. In this case a separate bonding conductor shall be provided.

(2) Elevators, escalators, and moving walks.

(a) Disconnecting means. Elevators, escalators, and moving walks shall have a single means for disconnecting all ungrounded main power supply conductors for each unit.

(b) Control panels. If control panels are not located in the same space as the drive machine, they shall be located in cabinets with doors or panels capable of being locked closed.

(3) Electric welders—disconnecting means.

(a) Motor-generator, AC transformer, and DC rectifier arc welders. A disconnecting means shall be provided in the supply circuit for each motor-generator arc welder, and for each AC transformer and DC rectifier arc welder which is not equipped with a disconnect mounted as an integral part of the welder.

(b) Resistance welders. A switch or circuit breaker shall be provided by which each resistance welder and its control equipment can be isolated from the supply circuit. The ampere rating of this disconnecting means shall not be less than the supply conductor ampacity.

(4) X-ray equipment.

(a) Disconnecting means.

(i) General. A disconnecting means shall be provided in the supply circuit. The disconnecting means shall be operable from a location readily accessible from the X-ray control. For equipment connected to a 120-volt branch circuit of 30 amperes or less, a grounding-type attachment plug cap and receptacle of proper rating may serve as a disconnecting means.

(ii) More than one piece of equipment. If more than one piece of equipment is operated from the same high-voltage circuit, each piece or each group of equipment as a unit shall be provided with a high-voltage switch or equivalent disconnecting means. This disconnecting means shall be constructed, enclosed, or located so as to avoid contact by employees with its live parts.

(b) Control-radiographic and fluoroscopic types. Radiographic and fluoroscopic-type equipment shall be effectively enclosed or shall have interlocks that deenergize the equipment automatically to prevent ready access to live current-carrying parts.

[Statutory Authority: RCW 49.17.010, 49.17.040, 49.17.050, 49.17.060. WSR 06-05-027, § 296-155-452, filed 2/7/06, effective 4/1/06. Statutory Authority: Chapter 49.17 RCW. WSR 88-11-021 (Order 88-04), § 296-155-452, filed 5/11/88.]

WAC 296-155-456 Hazardous (classified) locations. (1) Scope. This section sets forth requirements for electric equipment and wiring in locations which are classified depending on the properties of the flammable vapors, liquids or gases, or combustible dusts or fibers which may be present therein and the likelihood that a flammable or combustible concentration or quantity is present. Each room, section or area shall be considered individually in determining its classification. These hazardous (classified) locations are assigned six designations as follows: Class I, Division 1; Class I, Division 2; Class II, Division 1; Class II, Division 2; Class III, Division 1; Class III, Division 2. For definitions of these locations see WAC 296-155-462. All applicable requirements in this part apply to all hazardous (classified) locations, unless modified by provisions of this section.

(a) All components and utilization equipment used in a hazardous location shall be chosen from among those listed by a nationally recognized testing laboratory, such as Underwriters' Laboratories, Inc., or Factory Mutual Engineering Corp., except custom-made components and utilization equipment.

(b) Equipment approved for a specific hazardous location shall not be installed or intermixed with equipment approved for another specific hazardous location.

(2) Electrical installations. Equipment, wiring methods, and installations of equipment in hazardous (classified) locations shall be approved as intrinsically safe or approved for the hazardous (classified) location or safe for the hazardous (classified) location. Requirements for each of these options are as follows:

(a) Intrinsically safe. Equipment and associated wiring approved as intrinsically safe is permitted in any hazardous (classified) location included in its listing or labeling.

(b) Approved for the hazardous (classified) location.

(i) General. Equipment shall be approved not only for the class of location but also for the ignitible or combustible properties of the specific gas, vapor, dust, or fiber that will be present.

Note: NFPA 70, the National Electrical Code, lists or defines hazardous gases, vapors, and dusts by "groups" characterized by their ignitible or combustible properties.

(ii) Marking. Equipment shall not be used unless it is marked to show the class, group, and operating temperature or temperature range, based on operation in a 40°C ambient, for which it is approved. The temperature marking shall not exceed the ignition temperature of the specific gas, vapor, or dust to be encountered. However, the following provisions modify this marking requirement for specific equipment:

(A) Equipment of the nonheat-producing type (such as junction boxes, conduit, and fitting) and equipment of the heat-producing type having a maximum temperature of not more than 100°C (212°F) need not have a marked operating temperature or temperature range.

(B) Fixed lighting fixtures marked for use only in Class I, Division 2 locations need not be marked to indicate the group.

(C) Fixed general-purpose equipment in Class I locations, other than lighting fixtures, which is acceptable for use in Class I, Division 2 locations need not be marked with the class, group, division, or operating temperature.

(D) Fixed dust-tight equipment, other than lighting fixtures, which is acceptable for use in Class II, Division 2 and Class III locations need not be marked with the class, group, division, or operating temperature.

(c) Safe for the hazardous (classified) location. Equipment which is safe for the location shall be of a type and design which the employer demonstrates will provide protection from the hazards arising from the combustibility and flammability of vapors, liquids, gases, dusts, or fibers.

Note: The National Electrical Code, NFPA 70, contains guidelines for determining the type and design of equipment and installations which will meet this requirement. The guidelines of this document address electric wiring, equipment, and systems installed in hazardous (classified) locations and contain specific provisions for the following: Wiring methods, wiring connections, conductor insulation, flexible cords, sealing and drainage, transformers, capacitors, switches, circuit breakers, fuses, motor controllers, receptacles, attachment plugs, meters, relays, instruments, resistors, generators, motors, lighting fixtures, storage battery charging equipment, electric cranes, electric hoists and similar equipment, utilization equipment, signaling systems, alarm systems, remote control systems, local loud speaker and communication systems, ventilation piping, live parts, lightning surge protection, and grounding. Compliance with these guidelines will constitute one means, but not the only means, of compliance with this subsection.

(3) Conduits. All conduits shall be threaded and shall be made wrench-tight. Where it is impractical to make a threaded joint tight, a bonding jumper shall be utilized.

[Statutory Authority: RCW 49.17.010, 49.17.040, 49.17.050, 49.17.060. WSR 07-03-163, § 296-155-456, filed 1/24/07, effective 4/1/07. Statutory Authority: Chapter 49.17 RCW. WSR 88-11-021 (Order 88-04), § 296-155-456, filed 5/11/88.]

WAC 296-155-459 Special systems. (1) Systems over 600 volts, nominal. (a) through (d) of this subsection contain general requirements for all circuits and equipment operated at over 600 volts.

(a) Wiring methods for fixed installations.

(i) Above ground. Above-ground conductors shall be installed in rigid metal conduit, in intermediate metal conduit, in cable trays, in cablebus, in other suitable raceways, or as open runs of metal-clad cable designed for the use and purpose. However, open runs of nonmetallic-sheathed cable or of bare conductors or busbars may be installed in locations which are accessible only to qualified persons. Metallic shielding components, such as tapes, wires, or braids for conductors, shall be grounded. Open runs of insulated wires and cables having a bare lead sheath or a braided outer covering shall be supported in a manner designed to prevent physical damage to the braid or sheath.

(ii) Installations emerging from the ground. Conductors emerging from the ground shall be enclosed in raceways. Raceways installed on poles shall be of rigid metal conduit, intermediate metal conduit, PVC schedule 80 or equivalent extending from the ground line up to a point eight feet (2.44 m) above finished grade. Conductors entering a building shall be protected by an enclosure from the ground line to the point of entrance. Metallic enclosures shall be grounded.

(b) Interrupting and isolating devices.

(i) Circuit breakers. Circuit breakers located indoors shall consist of metal-enclosed or fire-resistant, cell-mounted units. In locations accessible only to qualified personnel, open mounting of circuit breakers is permitted. A means of indicating the open and closed position of circuit breakers shall be provided.

(ii) Fused cutouts. Fused cutouts installed in buildings or transformer vaults shall be of a type identified for the purpose. They shall be readily accessible for fuse replacement.

(iii) Equipment isolating means. A means shall be provided to completely isolate equipment for inspection and repairs. Isolating means which are not designed to interrupt the load current of the circuit shall be either interlocked with a circuit interrupter or provided with a sign warning against opening them under load.

(c) Mobile and portable equipment.

(i) Power cable connections to mobile machines. A metallic enclosure shall be provided on the mobile machine for enclosing the terminals of the power cable. The enclosure shall include provisions for a solid connection for the ground wire(s) terminal to ground effectively the machine frame. The method of cable termination used shall prevent any strain or pull on the cable from stressing the electrical connections. The enclosure shall have provision for locking so only authorized qualified persons may open it and shall be marked with a sign warning of the presence of energized parts.

(ii) Guarding live parts. All energized switching and control parts shall be enclosed in effectively grounded metal cabinets or enclosures. Circuit breakers and protective equipment shall have the operating means projecting through the metal cabinet or enclosure so these units can be reset without locked doors being opened. Enclosures and metal cabinets shall be locked so that only authorized qualified persons have access and shall be marked with a sign warning of the presence of energized parts. Collector ring assemblies on revolving-type machines (shovels, draglines, etc.) shall be guarded.

(d) Tunnel installations.

(i) Application. The provisions of this item apply to installation and use of high-voltage power distribution and utilization equipment which is associated with tunnels and which is portable and/or mobile, such as substations, trailers, cars, mobile shovels, draglines, hoists, drills, dredges, compressors, pumps, conveyors, and underground excavators.

(ii) Conductors. Conductors in tunnels shall be installed in one or more of the following:

(A) Metal conduit or other metal raceway;

(B) Type MC cable; or

(C) Other suitable multiconductor cable.

Conductors shall also be so located or guarded as to protect them from physical damage. Multiconductor portable cable may supply mobile equipment. An equipment grounding conductor shall be run with circuit conductors inside the metal raceway or inside the multiconductor cable jacket. The equipment grounding conductor may be insulated or bare.

(iii) Guarding live parts. Bare terminals of transformers, switches, motor controllers, and other equipment shall be enclosed to prevent accidental contact with energized parts. Enclosures for use in tunnels shall be drip-proof, weatherproof, or submersible as required by the environmental conditions.

(iv) Disconnecting means. A disconnecting means that simultaneously opens all ungrounded conductors shall be installed at each transformer or motor location.

(v) Grounding and bonding. All nonenergized metal parts of electric equipment and metal raceways and cable sheaths shall be grounded and bonded to all metal pipes and rails at the portal and at intervals not exceeding 1000 feet (305 m) throughout the tunnel.

(2) Class 1, Class 2, and Class 3 remote control, signaling, and power-limited circuits.

(a) Classification. Class 1, Class 2, or Class 3 remote control, signaling, or power-limited circuits are characterized by their usage and electrical power limitation which differentiates them from light and power circuits. These circuits are classified in accordance with their respective voltage and power limitations as summarized in (a)(i) through (iii) of this subsection.

(i) Class 1 circuits.

(A) A Class 1 power-limited circuit is supplied from a source having a rated output of not more than 30 volts and 1000 volt-amperes.

(B) A Class 1 remote control circuit or a Class 1 signaling circuit has a voltage which does not exceed 600 volts; however, the power output of the source need not be limited.

(ii) Class 2 and Class 3 circuits.

(A) Power for Class 2 and Class 3 circuits is limited either inherently (in which no overcurrent protection is required) or by a combination of a power source and overcurrent protection.

(B) The maximum circuit voltage is 150 volts AC or DC for a Class 2 inherently limited power source, and 100 volts AC or DC for a Class 3 inherently limited power source.

(C) The maximum circuit voltage is 30 volts AC and 60 volts DC for a Class 2 power source limited by overcurrent protection, and 150 volts AC or DC for a Class 3 power source limited by overcurrent protection.

(iii) Application. The maximum circuit voltages in (a)(i) and (ii) of this subsection apply to sinusoidal AC or continuous DC power sources, and where wet contact occurrence is not likely.

(b) Marking. A Class 2 or Class 3 power supply unit shall not be used unless it is durably marked where plainly visible to indicate the class of supply and its electrical rating.

(3) Communications systems.

(a) Scope. These provisions for communication systems apply to such systems as central-station-connected and non-central-station-connected telephone circuits, radio receiving and transmitting equipment, and outside wiring for fire and burglar alarm, and similar central station systems. These installations need not comply with the provisions of WAC 296-155-444 through 296-155-459(2), except WAC 296-155-447 (3)(a)(ii) and 296-155-456.

(b) Protective devices.

(i) Circuits exposed to power conductors. Communication circuits so located as to be exposed to accidental contact with light or power conductors operating at over 300 volts shall have each circuit so exposed provided with an approved protector.

(ii) Antenna lead-ins. Each conductor of a lead-in from an outdoor antenna shall be provided with an antenna discharge unit or other means that will drain static charges from the antenna system.

(c) Conductor location.

(i) Outside of buildings.

(A) Receiving distribution lead-in or aerial-drop cables attached to buildings and lead-in conductors to radio transmitters shall be so installed as to avoid the possibility of accidental contact with electric light or power conductors.

(B) The clearance between lead-in conductors and any lightning protection conductors shall not be less than 6 feet (1.83 m).

(ii) On poles. Where practicable, communication conductors on poles shall be located below the light or power conductors. Communications conductors shall not be attached to a crossarm that carries light or power conductors.

(iii) Inside of buildings. Indoor antennas, lead-ins, and other communication conductors attached as open conductors to the inside of buildings shall be located at least 2 inches (50.8 mm) from conductors of any light or power or Class 1 circuits unless a special and equally protective method of conductor separation is employed.

(d) Equipment location. Outdoor metal structures supporting antennas, as well as self-supporting antennas such as vertical rods or dipole structures, shall be located as far away from overhead conductors of electric light and power circuits of over 150 volts to ground as necessary to avoid the possibility of the antenna or structure falling into or making accidental contact with such circuits.

(e) Grounding.

(i) Lead-in conductors. If exposed to contact with electric light or power conductors, the metal sheath of aerial cables entering buildings shall be grounded or shall be interrupted close to the entrance to the building by an insulating joint or equivalent device. Where protective devices are used, they shall be grounded.

(ii) Antenna structures. Masts and metal structures supporting antennas shall be permanently and effectively grounded without splice or connection in the grounding conductor.

(iii) Equipment enclosures. Transmitters shall be enclosed in a metal frame or grill or separated from the operating space by a barrier, all metallic parts of which are effectively connected to ground. All external metal handles and controls accessible to the operating personnel shall be effectively grounded. Unpowered equipment and enclosures shall be considered grounded where connected to an attached coaxial cable with an effectively grounded metallic shield.

[Statutory Authority: Chapter 49.17 RCW. WSR 93-19-142 (Order 93-04), § 296-155-459, filed 9/22/93, effective 11/1/93; WSR 88-11-021 (Order 88-04), § 296-155-459, filed 5/11/88.]

WAC 296-155-462 Definitions applicable to this part. The definitions given in this section apply to the terms used in Part I. The definitions given here for "approved" and "qualified person" apply, instead of the definitions given in WAC 296-155-012, to the use of these terms in Part I.

(1) "Acceptable." An installation or equipment is acceptable to the director, and approved within the meaning of this Part I:

(a) If it is accepted, certified, listed, labeled, or otherwise determined to be safe by a qualified testing laboratory capa-

ble of determining the suitability of materials and equipment for installation and use in accordance with this standard; or

(b) With respect to an installation or equipment of a kind which no qualified testing laboratory accepts, certifies, lists, labels, or determines to be safe, if it is inspected or tested by another state agency, or by a federal, municipal, or other local authority responsible for enforcing occupational safety provisions of the National Electrical Code, and found in compliance with those provisions; or

(c) With respect to custom-made equipment or related installations which are designed, fabricated for, and intended for use by a particular customer, if it is determined to be safe for its intended use by its manufacturer on the basis of test data which the employer keeps and makes available for inspection to the director and his/her authorized representatives.

(2) "Accepted." An installation is "accepted" if it has been inspected and found to be safe by a qualified testing laboratory.

(3) "Accessible." (As applied to wiring methods.) Capable of being removed or exposed without damaging the building structure or finish, or not permanently closed in by the structure or finish of the building. (See "concealed" and "exposed.")

(4) "Accessible." (As applied to equipment.) Admitting close approach; not guarded by locked doors, elevation, or other effective means. (See "readily accessible.")

(5) "Ampacity." The current in amperes a conductor can carry continuously under the conditions of use without exceeding its temperature rating.

(6) "Appliances." Utilization equipment, generally other than industrial, normally built in standardized sizes or types, which is installed or connected as a unit to perform one or more functions.

(7) "Approved." Approved by the director of the department of labor and industries or his/her authorized representative: Provided, however, That should a provision of this chapter state that approval by an agency or organization other than the department of labor and industries is required, such as Underwriters' Laboratories, the Bureau of Mines, or Mine Safety and Health Administration (MSHA) and the National Institute for Occupational Safety and Health (NIOSH) the provisions of WAC 296-155-006 shall apply.

(8) "Askarel." A generic term for a group of nonflammable synthetic chlorinated hydrocarbons used as electrical insulating media. Askarels of various compositional types are used. Under arcing conditions the gases produced, while consisting predominantly of noncombustible hydrogen chloride, can include varying amounts of combustible gases depending upon the askarel type.

(9) "Attachment plug (plug cap) (cap)." A device which, by insertion in a receptacle, establishes connection between the conductors of the attached flexible cord and the conductors connected permanently to the receptacle.

(10) "Automatic." Self-acting, operating by its own mechanism when actuated by some impersonal influence, as for example, a change in current strength, pressure, temperature, or mechanical configuration.

(11) "Bare conductor." See "conductor."

(12) "Bonding." The permanent joining of metallic parts to form an electrically conductive path which will assure electrical continuity and the capacity to conduct safely any current likely to be imposed.

(13) "Bonding jumper." A reliable conductor to assure the required electrical conductivity between metal parts required to be electrically connected.

(14) "Branch circuits." That portion of a wiring system extending beyond the final overcurrent device protecting the circuit. (A device not approved for branch circuit protection, such as thermal cutout or motor overload protective device, is not considered as the overcurrent device protecting the circuit.)

(15) "Building." A structure which stands alone or which is cut off from adjoining structures by fire walls with all openings therein protected by approved fire doors.

(16) "Cabinet." An enclosure designed either for surface or flush mounting, and provided with a frame, mat, or trim in which a swinging door or doors are or may be hung.

(17) "Certified." Equipment is "certified" if it:

(a) Has been tested and found by a qualified testing laboratory to meet applicable test standards or to be safe for use in a specified manner; and

(b) Is of a kind whose production is periodically inspected by a qualified testing laboratory. Certified equipment must bear a label, tag, or other record of certification.

(18) "Circuit breaker."

(a) (600 volts nominal, or less.) A device designed to open and close a circuit by nonautomatic means and to open the circuit automatically on a predetermined overcurrent without injury to itself when properly applied within its rating.

(b) (Over 600 volts, nominal.) A switching device capable of making, carrying, and breaking currents under normal circuit conditions, and also making, carrying for a specified time, and breaking currents under specified abnormal circuit conditions, such as those of short circuit.

(19) "Class I locations." Class I locations are those in which flammable gases or vapors are or may be present in the air in quantities sufficient to produce explosive or ignitible mixtures. Class I locations include the following:

(a) Class I, Division 1. A Class I, Division 1 location is a location:

(i) In which ignitible concentrations of flammable gases or vapors may exist under normal operating conditions; or

(ii) In which ignitible concentrations of such gases or vapors may exist frequently because of repair or maintenance operations or because of leakage; or

(iii) In which breakdown or faulty operation of equipment or processes might release ignitible concentrations of flammable gases or vapors, and might also cause simultaneous failure of electric equipment.

Note: This classification usually includes locations where volatile flammable liquids or liquefied flammable gases are transferred from one container to another; interiors of spray booths and areas in the vicinity of spraying and painting operations where volatile flammable solvents are used; locations containing open tanks or vats of volatile flammable liquids; drying rooms or compartments for the evaporation of flammable solvents; inadequately ventilated pump rooms for flammable gas or for volatile flammable liquids; and all other locations where ignitible concentrations of flammable vapors or gases are likely to occur in the course of normal operations.

(b) Class I, Division 2. A Class I, Division 2 location is a location:

(i) In which volatile flammable liquids or flammable gases are handled, processed, or used, but in which the hazardous liquids, vapors, or gases will normally be confined within closed containers or closed systems from which they can escape only in case of accidental rupture or breakdown of such containers or systems, or in case of abnormal operation of equipment; or

(ii) In which ignitible concentrations of gases or vapors are normally prevented by positive mechanical ventilation, and which might become hazardous through failure or abnormal operations of the ventilating equipment; or

(iii) That is adjacent to a Class I, Division 1 location, and to which ignitible concentrations of gases or vapors might occasionally be communicated unless such communication is prevented by adequate positive-pressure ventilation from a source of clean air, and effective safeguards against ventilation failure are provided.

Note: This classification usually includes locations where volatile flammable liquids or flammable gases or vapors are used, but which would become hazardous only in case of an accident or of some unusual operating condition. The quantity of flammable material that might escape in case of accident, the adequacy of ventilating equipment, the total area involved, and the record of the industry or business with respect to explosions or fires are all factors that merit consideration in determining the classification and extent of each location.

Piping without valves, checks, meters, and similar devices would not ordinarily introduce a hazardous condition even though used for flammable liquids or gases. Locations used for the storage of flammable liquids or of liquefied or compressed gases in sealed containers would not normally be considered hazardous unless also subject to other hazardous conditions.

Electrical conduits and their associated enclosures separated from process fluids by a single seal or barrier are classed as a Division 2 location if the outside of the conduit and enclosures is a nonhazardous location.

(20) "Class II locations." Class II locations are those that are hazardous because of the presence of combustible dust. Class II locations include the following:

(a) Class II, Division 1. A Class II, Division 1 location is a location:

(i) In which combustible dust is or may be in suspension in the air under normal operating conditions, in quantities sufficient to produce explosive or ignitible mixtures; or

(ii) Where mechanical failure or abnormal operation of machinery or equipment might cause such explosive or ignitible mixtures to be produced, and might also provide a source of ignition through simultaneous failure of electric equipment, operation of protection devices, or from other causes; or

(iii) In which combustible dusts of an electrically conductive nature may be present.

Note: Combustible dusts which are electrically nonconductive include dusts produced in the handling and processing of grain and grain products, pulverized sugar and cocoa, dried egg and milk powders, pulverized spices, starch and pastes, potato and woodflour, oil meal from beans and seed, dried hay, and other organic materials which may produce combustible dusts when processed or handled. Dusts containing magnesium or aluminum are particularly hazardous and the use of extreme caution is necessary to avoid ignition and explosion.

(b) Class II, Division 2. A Class II, Division 2 location is a location in which:

(i) Combustible dust will not normally be in suspension in the air in quantities sufficient to produce explosive or ignitible mixtures, and dust accumulations are normally insufficient to interfere with the normal operation of electrical equipment or other apparatus; or

(ii) Dust may be in suspension in the air as a result of infrequent malfunctioning of handling or processing equipment, and dust accumulations resulting therefrom may be ignitible by abnormal operation or failure of electrical equipment or other apparatus.

Note: This classification includes locations where dangerous concentrations of suspended dust would not be likely but where dust accumulations might form on or in the vicinity of electric equipment. These areas may contain equipment from which appreciable quantities of dust would escape under abnormal operating conditions or be adjacent to a Class II, Division 1 location, as described above, into which an explosive or ignitible concentration of dust may be put into suspension under abnormal operating conditions.

(21) "Class III locations." Class III locations are those that are hazardous because of the presence of easily ignitible fibers or flyings but in which such fibers or flyings are not likely to be in suspension in the air in quantities sufficient to produce ignitible mixtures. Class III locations include the following:

(a) Class III, Division 1. A Class III, Division 1 location is a location in which easily ignitible fibers or materials producing combustible flyings are handled, manufactured, or used.

Note: Easily ignitible fibers and flyings include rayon, cotton (including cotton linters and cotton waste), sisal or henequen, istle, jute, hemp, tow, cocoa fiber, oakum, baled waste kapok, Spanish moss, excelsior, sawdust, woodchips, and other material of similar nature.

(b) Class III, Division 2. A Class III, Division 2 location is a location in which easily ignitible fibers are stored or handled, except in process of manufacture. Collector ring. A collector ring is an assembly of slip rings for transferring electrical energy from a stationary to a rotating member.

(22) "Collector ring." A collector ring is an assembly of slip rings for transferring electrical energy from a stationary to a rotating member.

(23) "Concealed." Rendered inaccessible by the structure or finish of the building. Wires in concealed raceways are considered concealed, even though they may become accessible by withdrawing them. See "accessible. (As applied to wiring methods.)"

(24) "Conductor."

(a) Bare. A conductor having no covering or electrical insulation whatsoever.

(b) Covered. A conductor encased within material of composition or thickness that is not recognized as electrical insulation.

(c) Insulated. A conductor encased within material of composition and thickness that is recognized as electrical insulation.

(25) "Controller." A device or group of devices that serves to govern, in some predetermined manner, the electric power delivered to the apparatus to which it is connected.

(26) "Covered conductor." See "conductor."

(27) "Cutout." (Over 600 volts, nominal.) An assembly of a fuse support with either a fuseholder, fuse carrier, or disconnecting blade. The fuseholder or fuse carrier may include a conducting element (fuse link), or may act as the disconnecting blade by the inclusion of a nonfusible member.

(28) "Cutout box." An enclosure designed for surface mounting and having swinging doors or covers secured directly to and telescoping with the walls of the box proper. (See "cabinet.")

(29) "Damp location." See "location."

(30) "Dead front." Without live parts exposed to a person on the operating side of the equipment.

(31) "Device." A unit of an electrical system which is intended to carry but not utilize electric energy.

(32) "Disconnecting means." A device, or group of devices, or other means by which the conductors of a circuit can be disconnected from their source of supply.

(33) "Disconnecting (or isolating) switch." (Over 600 volts, nominal.) A mechanical switching device used for isolating a circuit or equipment from a source of power.

(34) "Dry location." See "location."

(35) "Enclosed." Surrounded by a case, housing, fence or walls which will prevent persons from accidentally contacting energized parts.

(36) "Enclosure." The case or housing of apparatus, or the fence or walls surrounding an installation to prevent personnel from accidentally contacting energized parts, or to protect the equipment from physical damage.

(37) "Equipment." A general term including material, fittings, devices, appliances, fixtures, apparatus, and the like, used as a part of, or in connection with, an electrical installation.

(38) "Equipment grounding conductor." See "grounding conductor, equipment."

(39) "Explosion-proof apparatus." Apparatus enclosed in a case that is capable of withstanding an explosion of a specified gas or vapor which may occur within it and of preventing the ignition of a specified gas or vapor surrounding the enclosure by sparks, flashes, or explosion of the gas or vapor within, and which operates at such an external temperature that it will not ignite a surrounding flammable atmosphere.

(40) "Exposed. (As applied to live parts.)" Capable of being inadvertently touched or approached nearer than a safe distance by a person. It is applied to parts not suitably guarded, isolated, or insulated. (See "accessible" and "concealed.")

(41) "Exposed. (As applied to wiring methods.)" On or attached to the surface or behind panels designed to allow access. See "accessible. (As applied to wiring methods.)"

(42) "Exposed. (For the purposes of WAC 296-155-459(3), Communications systems.)" Where the circuit is in such a position that in case of failure of supports or insulation, contact with another circuit may result.

(43) "Externally operable." Capable of being operated without exposing the operator to contact with live parts.

(44) "Feeder." All circuit conductors between the service equipment, or the generator switchboard of an isolated plant, and the final branch-circuit overcurrent device.

(45) "Festoon lighting." A string of outdoor lights suspended between two points more than 15 feet (4.57 m) apart.

(46) "Fitting." An accessory such as a locknut, bushing, or other part of a wiring system that is intended primarily to perform a mechanical rather than an electrical function.

(47) "Fuse." (Over 600 volts, nominal.) An overcurrent protective device with a circuit opening fusible part that is heated and severed by the passage of overcurrent through it. A fuse comprises all the parts that form a unit capable of performing the prescribed functions. It may or may not be the complete device necessary to connect it into an electrical circuit.

(48) "Ground." A conducting connection, whether intentional or accidental, between an electrical circuit or equipment and the earth, or to some conducting body that serves in place of the earth.

(49) "Grounded." Connected to earth or to some conducting body that serves in place of the earth.

(50) "Grounded, effectively." (Over 600 volts, nominal.) Permanently connected to earth through a ground connection of sufficiently low impedance and having sufficient ampacity that ground fault current which may occur cannot build up to voltages dangerous to personnel.

(51) "Grounded conductor." A system or circuit conductor that is intentionally grounded.

(52) "Grounding conductor." A conductor used to connect equipment or the grounded circuit of a wiring system to a grounding electrode or electrodes.

(53) "Grounding conductor, equipment." The conductor used to connect the noncurrent-carrying metal parts of equipment, raceways, and other enclosures to the system grounded conductor and/or the grounding electrode conductor at the service equipment or at the source of a separately derived system.

(54) "Grounding electrode conductor." The conductor used to connect the grounding electrode to the equipment grounding conductor and/or to the grounded conductor of the circuit at the service equipment or at the source of a separately derived system.

(55) "Ground-fault circuit interrupter." A device for the protection of personnel that functions to deenergize a circuit or portion thereof within an established period of time when a current to ground exceeds some predetermined value that is less than that required to operate the overcurrent protective device of the supply circuit.

(56) "Guarded." Covered, shielded, fenced, enclosed, or otherwise protected by means of suitable covers, casings, barriers, rails, screens, mats, or platforms to remove the likelihood of approach to a point of danger or contact by persons or objects.

(57) "Hazard." That condition, potential or inherent, which is likely to cause injury, death, or occupational disease.

(58) "Hoistway." Any shaftway, hatchway, well hole, or other vertical opening or space in which an elevator or dumbwaiter is designed to operate.

(59) "Identified (conductors or terminals)." Identified, as used in reference to a conductor or its terminal, means that such conductor or terminal can be recognized as grounded.

(60) "Identified (for the use)." Recognized as suitable for the specific purpose, function, use, environment, application, etc., where described as a requirement in this standard. Suitability of equipment for a specific purpose, environment, or application is determined by a qualified testing laboratory where such identification includes labeling or listing.

(61) "Insulated conductor." See "conductor."

(62) "Interrupter switch." (Over 600 volts, nominal.) A switch capable of making, carrying, and interrupting specified currents.

(63) "Intrinsically safe equipment and associated wiring." Equipment and associated wiring in which any spark or thermal effect, produced either normally or in specified fault conditions, is incapable, under certain prescribed test conditions, of causing ignition of a mixture of flammable or combustible material in air in its most easily ignitible concentration.

(64) "Isolated." Not readily accessible to persons unless special means for access are used.

(65) "Isolated power system." A system comprising an isolating transformer or its equivalent, a line isolation monitor, and its ungrounded circuit conductors.

(66) "J-Box (junction box)." An electrical sheet metal enclosure with openings for conduit or cable with sheet metal cover. The primary purpose is for joining conductors for splicing.

(67) "Labeled." Equipment or materials to which has been attached a label, symbol or other identifying mark of a qualified testing laboratory which indicates compliance with appropriate standards or performance in a specified manner.

(68) "Lighting outlet." An outlet intended for the direct connection of a lampholder, a lighting fixture, or a pendant cord terminating in a lampholder.

(69) "Listed." Equipment or materials included in a list published by a qualified testing laboratory whose listing states either that the equipment or material meets appropriate standards or has been tested and found suitable for use in a specified manner.

(70) "Location."

(a) Damp location. Partially protected locations under canopies, marquees, roofed open porches, and like locations, and interior locations subject to moderate degrees of moisture, such as some basements.

(b) Dry location. A location not normally subject to dampness or wetness. A location classified as dry may be temporarily subject to dampness or wetness, as in the case of a building under construction.

(c) Wet location. Installations underground or in concrete slabs or masonry in direct contact with the earth, and locations subject to saturation with water or other liquids, such as locations exposed to weather and unprotected.

(71) "Mobile X ray." X-ray equipment mounted on a permanent base with wheels and/or casters for moving while completely assembled.

(72) "Motor control center." An assembly of one or more enclosed sections having a common power bus and principally containing motor control units.

(73) "Outlet." A point on the wiring system at which current is taken to supply utilization equipment.

(74) "Overcurrent." Any current in excess of the rated current of equipment or the ampacity of a conductor. It may result from overload (see definition), short circuit, or ground fault. A current in excess of rating may be accommodated by certain equipment and conductors for a given set of conditions. Hence the rules for overcurrent protection are specific for particular situations.

(75) "Overload." Operation of equipment in excess of normal, full load rating, or of a conductor in excess of rated ampacity which, when it persists for a sufficient length of time, would cause damage or dangerous overheating. A fault, such as a short circuit or ground fault, is not an overload. (See "overcurrent.")

(76) "Panelboard." A single panel or group of panel units designed for assembly in the form of a single panel; including buses, automatic overcurrent devices, and with or without switches for the control of light, heat, or power circuits; designed to be placed in a cabinet or cutout box placed in or against a wall or partition and accessible only from the front. (See "switchboard.")

(77) "Portable X ray." X-ray equipment designed to be hand-carried.

(78) "Power fuse." (Over 600 volts, nominal.) See "fuse."

(79) "Power outlet." An enclosed assembly which may include receptacles, circuit breakers, fuseholders, fused switches, buses and watt-hour meter mounting means; intended to serve as a means for distributing power required to operate mobile or temporarily installed equipment.

(80) "Premises wiring system." That interior and exterior wiring, including power, lighting, control, and signal circuit wiring together with all of its associated hardware, fittings, and wiring devices, both permanently and temporarily installed, which extends from the load end of the service drop, or load end of the service lateral conductors to the outlet(s). Such wiring does not include wiring internal to appliances, fixtures, motors, controllers, motor control centers, and similar equipment.

(81) "Qualified person." One familiar with the construction and operation of the equipment and the hazards involved.

(82) "Qualified testing laboratory." A properly equipped and staffed testing laboratory which has capabilities for and which provides the following services:

(a) Experimental testing for safety of specified items of equipment and materials referred to in this standard to determine compliance with appropriate test standards or performance in a specified manner;

(b) Inspecting the run of such items of equipment and materials at factories for product evaluation to assure compliance with the test standards;

(c) Service-value determinations through field inspections to monitor the proper use of labels on products and with authority for recall of the label in the event a hazardous product is installed;

(d) Employing a controlled procedure for identifying the listed and/or labeled equipment or materials tested; and

(e) Rendering creditable reports or findings that are objective and without bias of the tests and test methods employed.

(83) "Raceway." A channel designed expressly for holding wires, cables, or busbars, with additional functions as permitted in this part. Raceways may be of metal or insulating material, and the term includes rigid metal conduit, rigid nonmetallic conduit, intermediate metal conduit, liquidtight flexible metal conduit, flexible metallic tubing, flexible metal conduit, electrical metallic tubing, underfloor raceways, cellular concrete floor raceways, cellular metal floor raceways, surface raceways, wireways, and busways.

(84) "Readily accessible." Capable of being reached quickly for operation, renewal, or inspections, without requiring those to whom ready access is requisite to climb over or remove obstacles or to resort to portable ladders, chairs, etc. (See "accessible.")

(85) "Receptacle." A receptacle is a contact device installed at the outlet for the connection of a single attachment plug. A single receptacle is a single contact device with no other contact device on the same yoke. A multiple receptacle is a single device containing two or more receptacles.

(86) "Receptacle outlet." An outlet where one or more receptacles are installed.

(87) "Remote-control circuit." Any electric circuit that controls any other circuit through a relay or an equivalent device.

(88) "Sealable equipment." Equipment enclosed in a case or cabinet that is provided with a means of sealing or locking so that live parts cannot be made accessible without opening the enclosure. The equipment may or may not be operable without opening the enclosure.

(89) "Separately derived system." A premises wiring system whose power is derived from generator, transformer, or converter windings and has no direct electrical connection, including a solidly connected grounded circuit conductor, to supply conductors originating in another system.

(90) "Service." The conductors and equipment for delivering energy from the electricity supply system to the wiring system of the premises served.

(91) "Service conductors." The supply conductors that extend from the street main or from transformers to the service equipment of the premises supplied.

(92) "Service drop." The overhead service conductors from the last pole or other aerial support to and including the splices, if any, connecting to the service-entrance conductors at the building or other structure.

(93) "Service-entrance conductors, overhead system." The service conductors between the terminals of the service equipment and a point usually outside the building, clear of building walls, where joined by tap or splice to the service drop.

(94) "Service-entrance conductors, underground system." The service conductors between the terminals of the service equipment and the point of connection to the service lateral. Where service equipment is located outside the building walls, there may be no service-entrance conductors, or they may be entirely outside the building.

(95) "Service equipment." The necessary equipment, usually consisting of a circuit breaker or switch and fuses, and their accessories, located near the point of entrance of supply conductors to a building or other structure, or an otherwise defined area, and intended to constitute the main control and means of cutoff of the supply.

(96) "Service raceway." The raceway that encloses the service-entrance conductors.

(97) "Shock hazard." To exist at an accessible part in a circuit between the part and ground, or other accessible parts if the potential is more than 42.4 volts peak and the current through a 1,500-ohm load is more than 5 milliamperes.

(98) "Signaling circuit." Any electric circuit that energizes signaling equipment.

(99) "Switchboard." A large single panel, frame, or assembly of panels which have switches, buses, instruments, overcurrent and other protective devices mounted on the face or back or both. Switchboards are generally accessible from the rear as well as from the front and are not intended to be installed in cabinets. (See "panelboard.")

(100) "Switches."

(a) General-use switch. A switch intended for use in general distribution and branch circuits. It is rated in amperes, and it is capable of interrupting its rated current at its rated voltage.

(b) General-use snap switch. A form of general-use switch so constructed that it can be installed in flush device boxes or on outlet box covers, or otherwise used in conjunction with wiring systems recognized by this part.

(c) Isolating switch. A switch intended for isolating an electric circuit from the source of power. It has no interrupting rating, and it is intended to be operated only after the circuit has been opened by some other means.

(d) Motor-circuit switch. A switch, rated in horsepower, capable of interrupting the maximum operating overload current of a motor of the same horsepower rating as the switch at the rated voltage.

(101) "Switching devices." (Over 600 volts, nominal.) Devices designed to close and/or open one or more electric circuits. Included in this category are circuit breakers, cutouts, disconnecting (or isolating) switches, disconnecting means, and interrupter switches.

(102) "Transformer." A transformer is an apparatus for converting electrical power in an a-c system at one voltage or current into electrical power at some other voltage or current without the use of rotating parts.

(103) "Transportable X ray." X-ray equipment installed in a vehicle or that may readily be disassembled for transport in a vehicle.

(104) "Utilization equipment." Utilization equipment means equipment which utilizes electric energy for mechanical, chemical, heating, lighting, or similar useful purpose.

(105) "Utilization system." A utilization system is a system which provides electric power and light for employee workplaces, and includes the premises wiring system and utilization equipment.

(106) "Ventilated." Provided with a means to permit circulation of air sufficient to remove an excess of heat, fumes, or vapors.

(107) "Volatile flammable liquid." A flammable liquid having a flash point below 38°C (100°F) or whose temperature is above its flash point, or a Class II combustible liquid having a vapor pressure not exceeding 40 psia (276 kPa) at 38°C (100°F) whose temperature is above its flash point.

(108) "Voltage." (Of a circuit.) The greatest root-mean-square (effective) difference of potential between any two conductors of the circuit concerned.

(109) "Voltage, nominal." A nominal value assigned to a circuit or system for the purpose of conveniently designating its voltage class (as 120/240, 480Y/277, 600, etc.). The actual voltage at which a circuit operates can vary from the nominal within a range that permits satisfactory operation of equipment.

(110) "Voltage to ground." For grounded circuits, the voltage between the given conductor and that point or conductor of the circuit that is grounded; for ungrounded circuits, the greatest voltage between the given conductor and any other conductor of the circuit.

(111) "Watertight." So constructed that moisture will not enter the enclosure.

(112) "Weatherproof." So constructed or protected that exposure to the weather will not interfere with successful operation. Rainproof, raintight, or watertight equipment can fulfill the requirements for weatherproof where varying weather conditions other than wetness, such as snow, ice, dust, or temperature extremes, are not a factor.

(113) "Wet location." See "location."

[Statutory Authority: Chapter 49.17 RCW. WSR 94-15-096 (Order 94-07), § 296-155-462, filed 7/20/94, effective 9/20/94; WSR 93-19-142 (Order 93-04), § 296-155-462, filed 9/22/93, effective 11/1/93; WSR 88-11-021 (Order 88-04), § 296-155-462, filed 5/11/88.]

PART J

STAIRWAYS

Note: Requirements relating to portable ladders and fixed ladders have been moved to chapter 296-876 WAC, Ladders, portable and fixed.

WAC 296-155-475 Scope and application. This part applies to all stairways used in construction, alteration, repair (including painting and decorating), and demolition workplaces covered under chapter 296-155 WAC, and also sets forth, in specified circumstances, when stairways are required to be provided.

Reference:
- Requirements for ladders used on or with scaffolds are located in chapter 296-874 WAC, Scaffolds.
- Requirements for portable ladders and fixed ladders are located in chapter 296-876 WAC.

[Statutory Authority: RCW 49.17.010, 49.17.040, 49.17.050, 49.17.060. WSR 06-16-020, § 296-155-475, filed 7/24/06, effective 12/1/06; WSR 05-20-068, § 296-155-475, filed 10/4/05, effective 1/1/06. Statutory Authority: Chapter 49.17 RCW. WSR 91-24-017 (Order 91-07), § 296-155-475, filed 11/22/91, effective 12/24/91. Statutory Authority: RCW 49.17.040 and 49.17.050. WSR 86-03-074 (Order 86-14), § 296-155-475, filed 1/21/86; Order 76-6, § 296-155-475, filed 3/1/76; Order 74-26, § 296-155-475, filed 5/7/74, effective 6/6/74.]

WAC 296-155-47501 Definitions applicable to this part. (1) Equivalent means alternative designs, materials, or methods that the employer can demonstrate will provide an equal or greater degree of safety for employees than the method or item specified in the standard.

(2) Failure means load refusal, breakage, or separation of component parts. Load refusal is the point where the structural members lose their ability to carry the loads.

(3) Handrail means a rail used to provide employees with a handhold for support.

(4) Lower levels means those areas to which an employee can fall from a stairway or ladder. Such areas include ground levels, floors, roofs, ramps, runways, excavations, pits, tanks, material, water, equipment, and similar surfaces. It does not include the surface from which the employee falls.

(5) Nosing means that portion of a tread projecting beyond the face of the riser immediately below.

(6) Platform means a walking/working surface for persons, elevated above the surrounding floor or ground.

(7) Point of access means all areas used by employees for work-related passage from one area or level to another. Such open areas include doorways, passageways, stairway openings, studded walls, and various other permanent or temporary openings used for such travel.

(8) Riser height means the vertical distance from the top of a tread to the top of the next higher tread or platform/landing or the distance from the top of a platform/landing to the top of the next higher tread or platform/landing.

(9) Spiral stairway means a series of steps attached to a vertical pole and progressing upward in a winding fashion within a cylindrical space.

(10) Stairrail system means a vertical barrier erected along the unprotected sides and edges of a stairway to prevent employees from falling to lower levels. The top surface of a stairrail system may also be a "handrail."

(11) Tread depth means the horizontal distance from front to back of a tread (excluding nosing, if any).

(12) Unprotected sides and edges means any side or edge (except at entrances to points of access) of a stairway where there is no stairrail system or wall 36 inches (.9 m) or more in height, and any side or edge (except at entrances to points of access) of a stairway landing, or ladder platform where there is no wall or guardrail system 39 inches (1 m) or more in height.

[Statutory Authority: RCW 49.17.010, 49.17.040, 49.17.050, 49.17.060. WSR 06-16-020, § 296-155-47501, filed 7/24/06, effective 12/1/06; WSR 05-20-068, § 296-155-47501, filed 10/4/05, effective 1/1/06. Statutory Authority: Chapter 49.17 RCW. WSR 91-24-017 (Order 91-07), § 296-155-47501, filed 11/22/91, effective 12/24/91.]

WAC 296-155-476 General requirements. (1) A stairway or ladder shall be provided at all personnel points of access where there is a break in elevation of nineteen inches (48 cm) or more, and no ramp, runway, sloped embankment, or personnel hoist is provided.

(a) Employees shall not use any spiral stairways that will not be a permanent part of the structure on which construction work is being performed.

(b) A double-cleated ladder or two or more separate ladders shall be provided when ladders are the only means of access or exit from a working area for twenty-five or more employees, or when a ladder is to serve simultaneous two-way traffic.

(c) When a building or structure has only one point of access between levels, that point of access shall be kept clear to permit free passage of employees. When work must be performed or equipment must be used such that free passage

at that point of access is restricted, a second point of access shall be provided and used.

(d) When a building or structure has two or more points of access between levels, at least one point of access shall be kept clear to permit free passage of employees.

(2) Employers shall provide and install all stairway and ladder fall protection systems required by this part and shall comply with all other pertinent requirements of this part before employees begin the work that necessitates the installation and use of stairways, ladders, and their respective fall protection systems.

[Statutory Authority: RCW 49.17.010, 49.17.040, 49.17.050, 49.17.060. WSR 06-05-027, § 296-155-476, filed 2/7/06, effective 4/1/06. Statutory Authority: Chapter 49.17 RCW. WSR 91-24-017 (Order 91-07), § 296-155-476, filed 11/22/91, effective 12/24/91.]

WAC 296-155-477 Stairways. (1) General. The following requirements apply to all stairways as indicated:

(a) Stairways that will not be a permanent part of the structure on which construction work is being performed shall have landings of not less than thirty inches (76 cm) in the direction of travel and extend at least twenty-two inches (56 cm) in width at every twelve feet (3.7 m) or less of vertical rise.

(b) Stairs shall be installed between 30 deg. and 50 deg. from horizontal.

(c) In all buildings or structures two or more stories or twenty-four feet or more in height or depth, suitable permanent or temporary stairways shall be installed.

(d) Stairways, ramps or ladders shall be provided at all points where a break in elevation of eighteen inches or more occurs in a frequently traveled passageway, entry or exit.

(e) A minimum of one stairway shall be provided for access and exit for buildings and structures to three stories or thirty-six feet; if more than three stories or thirty-six feet, two or more stairways shall be provided. Where two stairways are provided and work is being performed in the stairways, one shall be maintained clear for access between levels at all times.

(f) Wood frame buildings.

(i) The stairway to a second or higher floor shall be completed before studs are raised to support the next higher floor.

(ii) Roof and attic work areas of all buildings shall be provided with a safe means of access and egress, such as stairways, ramps or ladders.

(iii) Cleats shall not be nailed to studs to provide access to and egress from roof or other work areas.

(g) Steel frame buildings. Stairways shall extend to the uppermost floor that has been planked or decked. Ladders may be used above that point.

(h) Reinforced concrete or composite steel—Concrete buildings. Stairways shall extend to the lowermost floor upon which a complete vertical shoring system is in place. A minimum of two ladders at different locations for each floor may be used above this floor but not to exceed three floors.

(i) Riser height and tread depth shall be uniform within each flight of stairs, including any foundation structure used as one or more treads of the stairs. Variations in riser height or tread depth shall not be over 1/4-inch (0.6 cm) in any stairway system.

(j) Where doors or gates open directly on a stairway, a platform shall be provided, and the swing of the door shall not reduce the effective width of the platform to less than twenty inches (51 cm).

(k) Metal pan landings and metal pan treads, when used, shall be secured in place before filling with concrete or other material.

(l) All parts of stairways shall be free of hazardous projections, such as protruding nails.

(m) Slippery conditions on stairways shall be eliminated before the stairways are used to reach other levels.

(n) Employers are permitted to use alternating tread type stairs as long as they install, use, and maintain the stairs in accordance with manufacturer's recommendations and the following:

(i) The stair must be installed at an angle of seventy degrees or less.

(ii) The stair must be capable of withstanding a minimum uniform load of one hundred pounds per square foot with a design factor of 1.7, and the treads must be capable of carrying a minimum concentrated load of three hundred pounds at the center of any treadspan or exterior arc with a design factor of 1.7. If the stair is intended for greater loading, construction must allow for that loading.

(iii) The stair must be equipped with a handrail on each side to assist the user in climbing or descending.

(o) Due to space limitations, when a permanent stairway must be installed at an angle above fifty degrees, such an installation (commonly called an inclined or ship's ladder) shall have treads, open risers and handrails on both sides.

(p) Where ladders are permitted for access under subsection (1) of this section, means shall be provided for employee hoisting of tools and material, such as a well wheel and hoisting line or the equivalent, so employees will have both hands free for ascending and descending ladders.

(2) Temporary service. The following requirements apply to all stairways as indicated:

(a) Except during stairway construction, foot traffic is prohibited on stairways with pan stairs where the treads and/or landings are to be filled in with concrete or other material at a later date, unless the stairs are temporarily fitted with wood or other solid material at least to the top edge of each pan. Such temporary treads and landings shall be replaced when worn below the level of the top edge of the pan.

(b) Except during stairway construction, foot traffic is prohibited on skeleton metal stairs where permanent treads and/or landings are to be installed at a later date, unless the stairs are fitted with secured temporary treads and landings long enough to cover the entire tread and/or landing area.

(c) Treads for temporary service shall be made of wood or other solid material, and shall be installed the full width and depth of the stair.

(3) Stairrails and handrails. The following requirements apply to all stairways as indicated:

(a) Stairways having four or more risers or rising more than thirty inches (76 cm), whichever is less, shall be equipped with:

(i) At least one handrail; and

(ii) One stairrail system along each unprotected side or edge.

Note: When the top edge of a stairrail system also serves as a handrail, subdivision (g) of this subsection applies.

(b) Winding and spiral stairways shall be equipped with a handrail offset sufficiently to prevent walking on those portions of the stairways where the tread width is less than six inches (15 cm).

(c) The height of stairrails shall be as follows:

(i) Stairrails installed after the effective date of this standard, shall be not less than thirty-six inches (91.5 cm) from the upper surface of the stairrail system to the surface of the tread, in line with the face of the riser at the forward edge of the tread.

(ii) Stairrails installed before the effective date of this standard, shall be not less than thirty inches (76 cm) nor more than thirty-four inches (86 cm) from the upper surface of the stairrail system to the surface of the tread, in line with the face of the riser at the forward edge of the tread.

(d) Midrails, screens, mesh, intermediate vertical members, or equivalent intermediate structural members, shall be provided between the top rail of the stairrail system and the stairway steps.

(i) Midrails, when used, shall be located at a height midway between the top edge of the stairrail system and the stairway steps.

(ii) Screens or mesh, when used, shall extend from the top rail to the stairway step, and along the entire opening between top rail supports.

(iii) When intermediate vertical members, such as balusters, are used between posts, they shall be not more than nineteen inches (48 cm) apart.

(iv) Other structural members, when used, shall be installed such that there are no openings in the stairrail system that are more than nineteen inches (48 cm) wide.

(e) Handrails and the top rails of stairrail systems shall be capable of withstanding, without failure, a force of at least 200 pounds (890 n) applied within two inches (5 cm) of the top edge, in any downward or outward direction, at any point along the top edge.

(f) The height of handrails shall be not more than thirty-seven inches (94 cm) nor less than thirty inches (76 cm) from the upper surface of the handrail to the surface of the tread, in line with the face of the riser at the forward edge of the tread.

(g) When the top edge of a stairrail system also serves as a handrail, the height of the top edge shall be not more than thirty-seven inches (94 cm) nor less than thirty-six inches (91.5 cm) from the upper surface of the stairrail system to the surface of the tread, in line with the face of the riser at the forward edge of the tread.

(h) Stairrail systems and handrails shall be so surfaced as to prevent injury to employees from punctures or lacerations, and to prevent snagging of clothing.

(i) Handrails shall provide an adequate handhold for employees grasping them to avoid falling.

(j) The ends of stairrail systems and handrails shall be constructed so as not to constitute a projection hazard.

(k) Handrails that will not be a permanent part of the structure being built shall have a minimum clearance of three inches (8 cm) between the handrail and walls, stairrail systems, and other objects.

(l) Unprotected sides and edges of stairway landings shall be provided with guardrail systems. Guardrail system criteria are contained in chapter 296-155 WAC, Part C-1, Fall protection requirements for construction.

[Statutory Authority: RCW 49.17.010, 49.17.040, 49.17.050, 49.17.060 and 29 C.F.R. 1926, Subpart M, Fall Protection. WSR 13-04-073, § 296-155-477, filed 2/4/13, effective 4/1/13. Statutory Authority: RCW 49.17.040, [49.17.]050 and [49.17.]060. WSR 96-24-051, § 296-155-477, filed 11/27/96, effective 2/1/97. Statutory Authority: Chapter 49.17 RCW. WSR 95-10-016, § 296-155-477, filed 4/25/95, effective 10/1/95; WSR 91-24-017 (Order 91-07), § 296-155-477, filed 11/22/91, effective 12/24/91.]

PART J-1

SCAFFOLDS

Note: Requirements relating to scaffolds have been moved to chapter 296-869 WAC.

PART L

CRANES, RIGGING, AND PERSONNEL LIFTING

WAC 296-155-529 Scope and definitions.

[Statutory Authority: RCW 49.17.010, 49.17.040, 49.17.050, 49.17.060 and chapter 49.17 RCW, and 29 C.F.R. 1926, Subpart CC. WSR 13-02-068, § 296-155-529, filed 12/31/12, effective 2/1/13. Statutory Authority: RCW 49.17.010, 49.17.040, 49.17.050, 49.17.060, 49.17.400, 49.17.410, 49.17.420, 49.17.430, and 49.17.440. WSR 08-22-080, § 296-155-529, filed 11/4/08, effective 1/1/10.]

WAC 296-155-52900 Scope. (1) Except as provided in subsection (3) of this section, this part applies to the following:

(a) Power-operated cranes and derricks used in construction that can hoist, lower and horizontally move a suspended load (with or without attachments). Such equipment includes, but is not limited to: Articulating boom cranes (such as knuckle-boom cranes); crawler cranes; floating cranes; cranes on barges; locomotive cranes; mobile cranes (such as wheel-mounted, rough-terrain, all-terrain, commercial truck-mounted, and boom truck cranes); multipurpose machines when configured to hoist and lower (by means of a winch or hook) and horizontally move a suspended load; industrial cranes (such as carry-deck cranes); cranes being used as dedicated pile drivers; service/mechanic trucks with a hoisting device; a crane on a monorail; tower cranes (such as fixed jib ("hammerhead boom"), luffing boom and self-erecting); pedestal cranes; portal cranes; overhead/bridge and gantry cranes; straddle cranes; side-boom tractors; derricks; and variations of such equipment; and

(b) Personnel lifting with attached or suspended platforms using cranes or derricks (WAC 296-155-547).

(2) Attachments. This standard applies to equipment included in subsection (1) of this section when used with attachments. Such attachments, whether crane-attached or suspended include, but are not limited to:

- Hooks;
- Magnets;
- Grapples;
- Clamshell buckets;
- Orange peel buckets;
- Concrete buckets;

• Draglines;
• Personnel platforms;
• Augers or drills; and
• Pile driving equipment.

(3) The equipment listed below are exempted from WAC 296-155-531 and 296-155-532 (Crane certifier accreditation and crane certification) through 296-155-53300 (Operator qualifications and certification):

(a) Cranes having a maximum rated capacity of one ton or less. See WAC 296-155-53414 for additional requirements.

(b) Powered industrial trucks (forklifts) when configured to hoist and lower (by means of a winch or hook) and horizontally move a suspended load are exempted from WAC 296-155-532 (crane certification). Operators must also follow the requirements in chapter 296-863 WAC, Forklifts and other powered industrial trucks.

(c) Service cranes with booms that rotate manually.

(4) The equipment listed below are exempt from this part:

(a) Equipment included in subsection (1) of this section while it has been converted or adapted for nonhoisting/lifting use. Such conversions/adaptations include, but are not limited to, power shovels, excavators and concrete pumps.

(b) Power shovels, excavators, wheel loaders, backhoes, loader backhoes, track loaders. This machinery is also excluded when used with chains, slings or other rigging to lift suspended loads.

(c) Automotive wreckers and tow trucks when used to clear wrecks and haul vehicles.

(d) Equipment originally designed as vehicle-mounted aerial devices (for lifting personnel) and self-propelled elevating work platforms.

(e) Hydraulic jacking systems, including telescopic/hydraulic gantries.

(f) Stacker cranes.

(g) Mechanic's truck with a hoisting device when used in activities related to equipment maintenance and repair.

(h) Equipment that hoists by using a come-a-long or chainfall.

(i) Dedicated drilling rigs.

(j) Gin poles used for the erection of communication towers.

(k) Tree trimming and tree removal work.

(l) Anchor handling or dredge-related operations with a vessel or barge using an affixed A-frame.

(m) Roustabouts.

(n) Machines equipped with a boom that is limited to up and down movement only and does not rotate.

(o) Conveyors.

(p) Pump hoists with booms that do not rotate.

(q) Cranes and their operators used on-site in manufacturing facilities or powerhouses for occasional or routine maintenance and repair work.

(r) Helicopter cranes.

(s) Permanently installed overhead/bridge, gantry cranes, semi-gantry, cantilever gantry, wall cranes, storage bridge cranes, and others having the same fundamental characteristics.

(t) Digger derricks when used for activities that are covered under chapter 296-45 WAC, Safety standards for electrical workers, or chapter 296-32 WAC, Safety standards for telecommunications. Cranes other than digger derricks when used for activities that are covered under chapter 296-45 WAC, Safety standards for electrical workers, or chapter 296-32 WAC, Safety standards for telecommunications are **NOT** exempt.

(u) Powered industrial trucks (forklifts) except when configured to hoist and lower (by means of a winch or hook) and horizontally move a suspended load.

Note: Rigging requirements for material handling is located in Part F-1 of this chapter.

(5) Digger derricks that do not meet the exemption criteria in subsection (4) of this section must comply with WAC 296-155-531 (crane certifier accreditation and crane certification) through WAC 296-155-53300 (Operator qualifications and certification) one hundred eighty days after the effective date of this section.

(6) Where provisions of this standard direct an operator, crewmember, or other employee to take certain actions, the employer must establish, effectively communicate to the relevant persons, and enforce work rules, to ensure compliance with such provisions.

(7) Work covered by chapter 296-45 WAC, Safety standards for electrical workers is deemed in compliance with WAC 296-155-53408.

(8) WAC 296-155-53400 (35) through (39) does not apply to cranes designed for use on railroad tracks, when used on railroad tracks that are used as part of the general railroad system of transportation that is regulated pursuant to the Federal Railroad Administration under C.F.R. 49, Part 213, and that comply with applicable Federal Railroad Administration requirements. See WAC 296-155-53400(39).

[Statutory Authority: RCW 49.17.010, 49.17.040, 49.17.050, 49.17.060 and chapter 49.17 RCW, and 29 C.F.R. 1926, Subpart CC. WSR 13-02-068, § 296-155-52900, filed 12/31/12, effective 2/1/13. Statutory Authority: RCW 49.17.010, 49.17.040, 49.17.050, 49.17.440, 49.17.060, and 29 C.F.R. 1926, Subpart CC. WSR 12-01-086, § 296-155-52900, filed 12/20/11, effective 2/1/12. Statutory Authority: RCW 49.17.010, 49.17.040, 49.17.050, 49.17.060, and chapter 49.17 RCW. WSR 10-14-100, § 296-155-52900, filed 7/6/10, effective 9/1/10. Statutory Authority: RCW 49.17.010, 49.17.040, 49.17.050, 49.17.060, 49.17.400, 49.17.410, 49.17.420, 49.17.430, and 49.17.440. WSR 08-22-080, § 296-155-52900, filed 11/4/08, effective 1/1/10.]

WAC 296-155-52901 Certification and proof load testing—Requirement. Effective January 1, 2010, all cranes and derricks covered in WAC 296-155-52900 and not exempt in subsection (3) of that section, must be certified and proof load tested annually by an accredited crane certifier recognized by the department.

Note: For additional inspection criteria and proof load testing requirements for specific types of cranes, see:
• WAC 296-155-53202 for mobile cranes.
• WAC 296-155-53204 for articulating boom cranes.
• WAC 296-155-53206 for tower cranes.
• WAC 296-155-53208 for self-erecting tower cranes.
• WAC 296-155-53210 for overhead and bridge cranes.
• WAC 296-155-53212 for derricks.

[Statutory Authority: RCW 49.17.010, 49.17.040, 49.17.050, 49.17.060, and chapter 49.17 RCW. WSR 10-14-100, § 296-155-52901, filed 7/6/10, effective 9/1/10.]

WAC 296-155-52902 Definitions. Accredited crane certifier means a crane inspector who has been accredited by the department.

A/D director (assembly/disassembly) director means an individual who meets the requirements in this part for an A/D director, irrespective of the person's formal job title or whether the person is nonmanagement or management personnel.

Angle of loading means the acute angle between horizontal and the leg of the rigging, often referred to as horizontal angle. See Figures 18 and 33.

Anti two-block device means a device that, when activated, disengages all crane functions whose movement can cause two-blocking.

Apprentice operator or **trainee** means a crane operator who has not met requirements established by the department under RCW 49.17.430.

Articulating boom crane means a crane whose boom consists of a series of folding, pin connected structural members, typically manipulated to extend or retract by power from hydraulic cylinders.

Assembly/disassembly means the assembly and/or disassembly of components or attachments covered under this part. With regard to tower cranes, "erecting and climbing" replaces the term "assembly," and "dismantling" replaces the term "disassembly." Regardless of whether the crane is initially erected to its full height or is climbed in stages, the process of increasing height of the crane is an erection process.

Assist crane means a crane used to assist in assembling or disassembling a crane.

Attachments mean any device that expands the range of tasks that can be done by the crane/derrick. Examples include, but are not limited to: An auger, drill, magnet, pile-driver, and boom-attached personnel platform.

Audible signal means a signal made by a distinct sound or series of sounds. Examples include, but are not limited to, sounds made by a bell, horn, or whistle.

Basket hitch means a method of rigging a sling in which the sling is passed around the load and both loop eyes or end fittings are attached to the lifting device.

Below-the-hook lifting device means a device used for attaching loads to a hoist. The device may contain components such as slings, hooks, rigging hardware, and lifting attachments.

Bird caging means the twisting of fiber or wire rope in an isolated area of the rope in the opposite direction of the rope lay, thereby causing it to take on the appearance of a bird cage.

Blocking (also referred to as "cribbing") means wood or other material used to support equipment or a component and distribute loads to the ground. It is typically used to support latticed boom sections during assembly/disassembly and under outrigger and stabilizer floats.

Boatswain's chair means a single-point adjustable suspension scaffold consisting of a seat or sling (which may be incorporated into a full body harness) designed to support one employee in a sitting position.

Bogie. See "travel bogie."

Boom (other than tower crane) means an inclined spar, strut, or other long structural member which supports the upper hoisting tackle on a crane or derrick. Typically, the length and vertical angle of the boom can be varied to achieve increased height or height and reach when lifting loads. Booms can usually be grouped into general categories of hydraulically extendible, cantilevered type, latticed section, cable supported type or articulating type.

Boom (tower cranes) on tower cranes: If the "boom" (i.e., principal horizontal structure) is fixed, it is referred to as a jib; if it is moveable up and down, it is referred to as a boom.

Boom angle indicator means a device which measures the angle of the boom relative to horizontal.

Boom hoist limiting device includes boom hoist disengaging device, boom hoist shut-off, boom hoist disconnect, boom hoist hydraulic relief, boom hoist kick-outs, automatic boom stop device, or derricking limiter. This type of device disengages boom hoist power when the boom reaches a predetermined operating angle. It also sets brakes or closes valves to prevent the boom from lowering after power is disengaged.

Boom length indicator indicates the length of the permanent part of the boom (such as ruled markings on the boom) or, as in some computerized systems, the length of the boom with extensions/attachments.

Boom stop includes boom stops (belly straps with struts/standoff), telescoping boom stops, attachment boom stops, and backstops. These devices restrict the boom from moving above a certain maximum angle and toppling over backward.

Boom suspension systems means a system of pendants, running ropes, sheaves, and other hardware which supports the boom tip and controls the boom angle.

Braided wire rope means a wire rope formed by plaiting component wire ropes.

Bridle wire rope sling means a sling composed of multiple legs with the top ends gathered in a fitting that goes over the lifting hook.

Builder means the builder/constructor of derricks.

Cable laid endless sling-mechanical joint means a wire rope sling made endless from one continuous length of cable laid rope with the ends joined by one or more metallic fittings.

Cable laid grommet-hand tucked means an endless wire rope sling made from one continuous length of rope formed to make a body composed of six ropes around a rope core. The rope ends are tucked into the body, thus forming the core. No sleeves are used.

Center of gravity means the center of gravity of any object is the point in the object around which its weight is evenly distributed. If you could put a support under that point, you could balance the object on the support.

Certified crane inspector means a crane certifier accredited by the department.

Certified welder means a welder who meets nationally recognized certification requirements applicable to the task being performed.

Choker hitch means a method of rigging a sling in which the sling is passed around the load, then through one

loop eye, end fitting, or other device, with the other loop eye or end fitting attached to the lifting device. This hitch can be done with a sliding choker hook or similar device.

Climbing means the process in which a tower crane is raised or lowered to a new working height, either by adding or removing tower sections to the top of the crane (top climbing), or by a system in which the entire crane is raised or lowered inside the structure (inside climbing).

Come-a-long means a mechanical device typically consisting of a chain or cable attached at each end that is used to facilitate movement of materials through leverage.

Competent person means one who is capable of identifying existing and predictable hazards in the surroundings or working conditions which are unsanitary, hazardous, or dangerous to employees, and who has authorization to take prompt corrective measures to eliminate them.

Construction work means (for the purposes of this part) all or any part of excavation, construction, erection, alteration, repair, demolition, and dismantling of buildings and other structures and all related operations; the excavation, construction, alteration, and repair of sewers, trenches, caissons, conduits, pipelines, roads, and all related operations; the moving of buildings and other structures, and the construction, alteration, repair, or removal of wharfs, docks, bridges, culverts, trestles, piers, abutments, or any other related construction, alteration, repair, or removal work. Construction work does not include the normal day-to-day activities at manufacturing facilities or powerhouses.

Controlled load lowering means lowering a load by means of a mechanical hoist drum device that allows a hoisted load to be lowered with maximum control using the gear train or hydraulic components of the hoist mechanism. Controlled load lowering requires the use of the hoist drive motor, rather that the load hoist brake, to lower the load.

Controlling entity means an employer that is a prime contractor, general contractor, construction manager or any other legal entity which has the overall responsibility for the construction of the projects, its planning, quality, and completion.

Counterjib (counterweight jib) means a horizontal member of the tower crane on which the counterweights and usually the hoisting machinery are mounted.

Counterweight means weight used to supplement the weight of equipment in providing stability for lifting loads by counterbalancing those loads.

Crane means power-operated equipment used in construction that can hoist, lower, and horizontally move a suspended load. "Crane" includes, but is not limited to: Articulating boom cranes, such as knuckle-boom cranes; crawler cranes; floating cranes; cranes on barges; locomotive cranes; mobile cranes, such as wheel-mounted, rough-terrain, all-terrain, commercial truck mounted, and boom truck cranes; multipurpose machines when configured to hoist and lower by means of a winch or hook and horizontally move a suspended load; industrial cranes, such as carry-deck cranes; dedicated pile drivers; service/mechanic trucks with a hoisting device; a crane on a monorail; tower cranes, such as fixed jib, hammerhead boom, luffing boom, and self-erecting; pedestal cranes; portal cranes; overhead and gantry cranes; straddle cranes; side-boom tractors; derricks; and variations of such equipment.

Crane/derrick type means cranes or derricks as established by American Society of Mechanical Engineers (ASME). Crane operator means an individual engaged in the operation of a crane.

Crane level indicator means a device for determining true horizontal (also see safety devices).

Crawler crane means equipment that has a type of base mounting which incorporates a continuous belt of sprocket driven track.

Critical lift means a lift that:

• Exceeds seventy-five percent of the crane or derrick rated load chart capacity; or

• Requires the use of more than one crane or derrick.

Cross rod means a wire used to join spirals of metal mesh to form a complete fabric. See Figure 22.

Crossover points means locations on a wire rope which is spooled on a drum where one layer of rope climbs up on and crosses over the previous layer. This takes place at each flange of the drum as the rope is spooled onto the drum, reaches the flange, and begins to wrap back in the opposite direction.

Dedicated channel means a line of communication assigned by the employer who controls the communication system to only one signal person and crane/derrick or to a coordinated group of cranes/derricks/signal persons.

Dedicated drilling rig means a machine which creates bore holes and/or shafts in the ground.

Dedicated pile-driver is a machine that is designed to function exclusively as a pile-driver. These machines typically have the ability to both hoist the material that will be pile-driven and to pile-drive that material.

Dedicated spotter (power lines): To be considered a dedicated spotter, the requirements of WAC 296-155-53302 (Signal person qualifications) must be met and his/her sole responsibility is to watch the separation between the power line and the equipment, the load line and load (including rigging and lifting accessories), and ensure through communication with the operator that the applicable minimum approach distance is not breached.

Derrick is an apparatus consisting of a mast or equivalent member held at the end by guys or braces, with or without a boom, for use with a hoisting mechanism and operating ropes.

Design factor means the ratio between nominal or minimum breaking strength and rated load.

Digger derrick means a multipurpose vehicle-mounted machine which is primarily designed to accommodate components that dig holes, set poles, and position materials and apparatus.

Directly under the load means a part or all of an employee is directly beneath the load.

Dismantling includes partial dismantling (such as dismantling to shorten a boom or substitute a different component).

Drum rotation indicator is a device on a crane or hoist which indicates in which direction and at what relative speed a particular hoist drum is turning.

Electrical contact means when a person, object, or equipment makes contact or comes close in proximity with an energized conductor or equipment that allows the passage of current.

Employer-made equipment means floating cranes/derricks designed and built by an employer for the employer's own use.

Encroachment is where any part of the crane, load line or load (including rigging and lifting accessories) breaches a minimum clearance distance that this part requires to be maintained from a power line.

Equipment criteria means instructions, recommendations, limitations and specifications.

Fabric (metal mesh) means the flexible portion of the sling exclusive of end fittings consisting of a series of transverse spirals and cross rods.

Fall protection equipment means guardrail systems, safety net systems, personal fall arrest systems, positioning device systems or fall restraint systems.

Fall restraint system means a fall protection system that prevents the user from falling any distance. The system is comprised of either a body belt or body harness, along with an anchorage, connectors, and other necessary equipment. The other components typically include a lanyard, and may also include a lifeline and other devices.

Fall zone means the area (including, but not limited to, the area directly beneath the load) in which it is reasonably foreseeable that partially or completely suspended materials could fall in the event of an accident.

Flange points means a point of contact between rope and drum flange where the rope changes layers.

Floating cranes/derricks means equipment designed by the manufacturer (or employer) for marine use by permanent attachment to a barge, pontoons, vessel or other means of flotation.

Free fall (of the load line) means when only the brake is used to regulate the descent of the load line (the drive mechanism is not used to drive the load down faster or retard its lowering).

Free rated load test means testing stability and operation of crane, carrier, wheels, tires, tracks, brakes, etc., under load, when lifting without outriggers and/or traveling with the load are permitted at the activity for the type of crane being tested.

Free surface effect is the uncontrolled transverse movement of liquids in compartments which reduce a vessel's transverse stability.

Functional testing means the testing of a crane, typically done with a light load or no load, to verify the proper operation of a crane's primary function, i.e., hoisting, braking, booming, swinging, etc. A functional test is contrasted to testing the crane's structural integrity with heavy loads.

Gin pole derrick means a boom without a mast which has guys arranged from its top to permit leaning the mast in one or more directions. The load is lifted and lowered by ropes reeved through sheaves or blocks at the top of the mast and the lower block.

Ground conditions means the ability of the ground to support the crane/derrick (including slope, compaction, and firmness).

Ground crew means those individuals who are involved in the personnel lift, other than the hoisting equipment operator and the platform occupants. These individuals include riggers, signal persons, and supervision.

Gudgeon pins means a pin connecting the mast cap to the mast allowing rotation of the mast.

Guy means a rope used to steady or secure the mast, boom, or other member in the desired position.

Hairpin anchors means a hairpin-shaped, guy-supporting anchor that is placed in footings or walls before concrete is poured and held in place by the cured concrete.

Hitch (hitched) means a method of rigging (attaching) a sling temporarily to a load or object for the purpose of lifting.

Hoist means a mechanical device for lifting and lowering loads by winding rope onto or off a drum.

Hoisting means the act of raising, lowering or otherwise moving a load in the air with equipment covered by this standard. As used in this standard, "hoisting" can be done by means other than wire rope/hoist drum equipment.

Hoisting equipment means a machine for lifting and lowering a load and moving it horizontally. The machine may be fixed or mobile and be driven manually, by power, or by a combination of both.

Hook latch means a mechanical device used to close the throat opening of a hook.

Insulating link/device means an insulating device listed, labeled, or accepted by a nationally recognized testing laboratory in accordance with 29 C.F.R. 1910.7.

Intermediate rail means the middle member of a barrier along the edges of a platform, located approximately one-half the distance between the platform floor and top rail.

Jib means an extension attached to the boom point to provide added boom length for lifting specified loads. The jib may be in line with the boom or offset to various angles in the vertical plane of the boom. For tower cranes, see boom (tower cranes).

Jib stop (also referred to as a jib backstop), is the same type of device as a boom stop but is for a fixed or luffing jib.

Land crane/derrick means equipment not originally designed by the manufacturer for marine use by permanent attachment to barges, pontoons, vessels, or other means of flotation.

List means the angle of inclination about the longitudinal axis of a barge, pontoons, vessel, or other means of flotation.

Live boom means a boom whose lowering is controlled by a brake without the aid of other lowering retarding devices (free-fall capable).

Live load line means a load line whose lowering is controlled by a brake without the aid of other lowering retarding devices (free-fall capable).

Load is the weight of the object being lifted or lowered, including the weight of the load-attaching equipment such as the load block, ropes, slings, shackles, and any other auxiliary attachment.

Load moment (or rated capacity) indicator means a system which aids the equipment operator by sensing the overturning moment on the equipment, i.e., load X radius. It compares this lifting condition to the equipment's rated capacity, and indicates to the operator the percentage of capacity at which the equipment is working. Lights, bells, or buzzers may be incorporated as a warning of an approaching overload condition.

Load moment (or rated capacity) limiter means a system which aids the equipment operator by sensing the overturning moment on the equipment, i.e., load X radius. It compares this lifting condition to the equipment's rated capacity, and when the rated capacity is reached, it shuts off power to those equipment functions which can increase the severity of loading on the equipment, e.g., hoisting, telescoping out, or luffing out. Typically, those functions which decrease the severity of loading on the equipment remain operational, e.g., lowering, telescoping in, or luffing in.

Load ratings means a set of rated loads for stipulated hoisting equipment configurations and operating conditions.

Load sustaining/bearing parts means those parts of a crane that support the crane or load and upon failure could cause dropping, uncontrolled shifting, or uncontrolled movement of the crane or load.

Locomotive crane means a crane mounted on a base or car equipped for travel on a railroad track.

Luffing boom is a member hinged to the rotating superstructure and used for supporting the hoisting tackle.

Luffing jib limiting device is similar to a boom hoist limiting device, except that it limits the movement of the luffing jib.

Marine worksite means a construction worksite located in, on or above the water.

Master coupling link means an alloy steel welded coupling link used as an intermediate link to join alloy steel chain to master links.

Master link means forged or welded steel link used to support all members (legs) of an alloy steel chain sling or wire rope sling.

Mechanical coupling link (alloy steel chain) means a nonwelded, mechanically closed link used primarily to attach fittings to alloy steel chain.

Mobile cranes means a lifting device incorporating a cable suspended latticed boom or hydraulic telescopic boom designed to be moved between operating locations by transport over the road.

Moving point-to-point means the times during which an employee is in the process of going to or from a work station.

Multipurpose machine means a machine that is designed to be configured in various ways, at least one of which allows it to hoist (by means of a winch or hook) and horizontally move a suspended load. For example, a machine that can rotate and can be configured with removable forks/tongs (for use as a forklift) or with a winch pack, jib (with a hook at the end) or jib used in conjunction with a winch. When configured with the forks/tongs, it is not covered by this part. When configured with a winch pack, jib (with a hook at the end) or jib used in conjunction with a winch, it is covered by this part.

Multiple lift rigging means a rigging assembly manufactured by wire rope rigging suppliers that facilitates the attachment of up to five independent loads to the hoist rigging of a crane.

Nationally recognized accrediting agency is an organization that, due to its independence and expertise, is widely recognized as competent to accredit testing organizations.

Nonconductive means that, because of the nature and condition of the materials used, and the conditions of use (including environmental conditions and condition of the material), the object in question has the property of not becoming energized (that is, it has high dielectric properties offering a high resistance to the passage of current under the conditions of use).

Nonstandard tower crane base means any deviation from the structural support or base configuration recommended by the crane manufacturer.

Occasional or routine maintenance and repair work means regular, customary and foreseeable work necessary to keep equipment in good repair and/or condition. This also includes regular, customary and foreseeable work necessary to return equipment to sound condition after damage.

Operational aid means an accessory that provides information to facilitate operation of a crane or that takes control of particular functions without action of the operator when a limiting condition is sensed. Examples of such devices include, but are not limited to, the following: Anti-two-block device, rated capacity indicator, rated capacity (load) limiter, boom angle or radius indicator, lattice boom hoist disconnect device, boom length indicator, drum rotation indicator, load indicator, and wind speed indicator.

Operational controls means levers, switches, pedals and other devices for controlling equipment operation.

Operator is a person who is operating the equipment.

Outriggers means extendable or fixed members attached to the mounting base, which rests on supports at the outer ends, used to support the crane.

Overhead/bridge and gantry cranes includes overhead/bridge cranes, cranes on monorails, under hung cranes, semigantry, cantilever gantry, wall cranes, storage bridge cranes, launching gantry cranes, and similar equipment, irrespective of whether it travels on tracks, wheels, or other means.

Pendants includes both wire and bar types. Wire type: A fixed length of wire rope with mechanical fittings at both ends for pinning segments of wire rope together. Bar type: Instead of wire rope, a bar is used. Pendants are typically used in a latticed boom crane system to easily change the length of the boom suspension system without completely changing the rope on the drum when the boom length is increased or decreased.

Personal fall arrest system means a system used to arrest an employee in a fall from a working level. It consists of an anchorage, connectors, and a body harness and may include a lanyard, deceleration device, lifeline, or suitable combination of these.

Personnel lifting means raising, lowering, or transporting personnel using a crane/derrick.

Personnel platform - Boom attached means a platform attached to the boom of the crane.

Personnel platform - Suspended means a platform attached to a crane/derrick using wire rope, chain, or a jointed attachment and that has no installed motion controls for the platform itself.

Personnel platform suspension system means the rope or chain slings and other components, including fastening devices, used to connect the crane/derrick to the personnel platform.

Platform occupant means a person who is within the guardrail barrier while the personnel platform is in a hoisted position.

Platform rating means the maximum capacity of a personnel lifting platform, established by the platform manufacturer, in terms of total weight and the number of occupants allowed.

Portal crane is a type of crane consisting of a rotating upper structure, hoist machinery, and boom mounted on top of a structural gantry which may be fixed in one location or have travel capability. The gantry legs or columns usually have portal openings in between to allow passage of traffic beneath the gantry.

Power controlled lowering means a system or device in the power train, other than the load hoist brake, that can regulate the lowering rate of speed of the load hoist mechanism.

Powerhouse means a plant wherein electric energy is produced by conversion from some other form of energy (e.g., chemical, nuclear, solar, mechanical, or hydraulic) by means of suitable apparatus. This includes all generating station auxiliaries and other associated equipment required for the operation of the plant. Not included are stations producing power exclusively for use with communication systems.

Power lines means electrical distribution and electrical transmission lines.

Procedures include, but are not limited to: Instructions, diagrams, recommendations, warnings, specifications, protocols, and limitations.

Proximity alarm is a device that provides a warning of proximity to a power line that has been listed, labeled or accepted by a nationally recognized testing laboratory in accordance with 29 C.F.R. 1910.7.

Qualified crane operator means a crane operator who meets the requirements established by the department under RCW 49.17.430.

Qualified evaluator (not a third party) means a person employed by the signal person's or the rigger's employer (as applicable) who has demonstrated that he/she is competent in accurately assessing whether individuals meet the qualification requirements in this part for a signal person or a rigger.

Qualified evaluator (third party) means an entity that, due to its independence and expertise, has demonstrated that it is competent in accurately assessing whether individuals meet the qualification requirements in this part for a signal person or a rigger.

Qualified person means a person who, by possession of a recognized degree, certificate, or professional standing, or who by extensive knowledge, training and experience, successfully demonstrated the ability to solve/resolve problems relating to the subject matter, the work, or the project.

Qualified rigger is a rigger who meets the requirements in WAC 296-155-53306.

Qualified signal person is a signal person who meets the requirements in WAC 296-155-53302.

Range control limit device is a device that can be set by an equipment operator to limit movement of the boom or jib tip to a plane or multiple planes.

Range control warning device is a device that can be set by an equipment operator to warn that the boom or jib tip is at a plane or multiple planes.

Rated capacity means the maximum working load permitted by the manufacturer under specified working conditions. Such working conditions typically include a specific combination of factors such as equipment configuration, radii, boom length, and other parameters of use.

Rated capacity indicator, see load moment indicator.

Rated capacity limiter, see load moment limiter.

Repetitive pickup points refer to, when operating on a short cycle operation, the rope being used on a single layer and being spooled repetitively over a short portion of the drum.

Rotation resistant rope means a type of wire rope construction which reduces the tendency of a rope to rotate about its axis under load. Usually, this consists of an inner system of core strands laid in one direction covered by an outer system of strands laid in the opposite direction.

RPE means a registered professional engineer licensed under RCW 18.43.040(1).

RPSE means a registered professional structural engineer licensed under RCW 18.43.040(1).

Running wire rope is a wire rope that moves over sheaves or drums.

Runway means a firm, level surface designed, prepared and designated as a path of travel for the weight and configuration of the crane being used to lift and travel with the crane suspended platform. An existing surface may be used as long as it meets these criteria.

Safety devices, examples of safety devices are, but are not limited to, the following: Horn, boom/jib or trolley stops, crane level indicator, hydraulic holding device/check valve, rail clamps, rail stops, brakes, deadman control or forced neutral return control, emergency stop switch, guards, handrails, audible and visual alarms, etc.

Safety or health standard means a standard adopted under this chapter.

Section means a section of this part, unless otherwise specified.

Side-boom crane means a track-type or wheel-type tractor having a boom mounted on the side of the tractor, used for lifting, lowering, or transporting a load suspended on the load hook. The boom or hook can be lifted or lowered in a vertical direction only.

Sling means an assembly to be used for lifting when connected to a lifting mechanism. The upper portion of the sling is connected to the lifting mechanism and the lower supports the load, as described in this part.

Special hazard warnings means warnings of site-specific hazards (for example, proximity of power lines).

Spiral means a single transverse coil that is the basic element from which metal mesh is fabricated.

Stability (flotation device) means the tendency of a barge, pontoons, vessel, or other means of flotation to return to an upright position after having been inclined by an external force.

Stabilizer means an extendable or fixed member attached to the mounting base to increase the stability of the crane, but that may not have the capability of relieving all of the weight from the wheels or tracks.

Standard method means the hand signals established in the applicable ASME B30 series and WAC 296-155-56400, Mobile crane hand signal chart.

Standing wire rope means a supporting wire rope which maintains a constant distance between the points of attachment to the two components connected by the wire rope.

Superstructure: See upperworks.

Supporting materials means blocking, mats, cribbing, marsh buggies (in marshes/wetlands), or similar supporting materials or devices.

Taglines means a rope (usually fiber) attached to a lifted load for purposes of controlling load spinning and pendular motions or used to stabilize a bucket or magnet during material handling operations.

Tender means an individual responsible for monitoring and communication with a diver.

Tilt up or tilt down operation means raising/lowering a load from the horizontal to vertical or vertical to horizontal.

Toe board means a vertical barrier at foot level, along the edges of the platform, to protect against material from falling over the edge.

Top rail means the top member of a barrier along the edges of a platform to protect against persons from falling off the platform.

Tower crane means a type of lifting structure which utilizes a vertical mast or tower to support a working boom (jib) in an elevated position. Loads are suspended from the working boom. While the working boom may be of the fixed type (horizontal or angled) or have luffing capability, it can always rotate to swing loads, either by rotating on the top of the tower (top slewing) or by the rotation of the tower (bottom slewing). The tower base may be fixed in one location or ballasted and moveable between locations. Mobile cranes that are configured with a luffing jib and/or tower attachments are not considered tower cranes under this part.

Travel means the function of the hoisting equipment moving under its own power from one location to another.

Travel bogie (tower cranes) means an assembly of two or more axles arranged to permit vertical wheel displacement and equalize the loading on the wheels.

Trim means the angle of inclination about the transverse axis of a barge, pontoons, vessel or other means of flotation.

Two blocking means a condition in which a component that is uppermost on the hoist line such as the load block, hook block, overhaul ball, or similar component, comes in contact with the boom tip, fixed upper block or similar component. This binds the system and continued application of power can cause failure of the hoist rope or other component.

Unavailable procedures means procedures that are no longer available from the manufacturer, or have never been available from the manufacturer.

Upperstructure: See upperworks.

Upperworks means the revolving frame of equipment on which the operating machinery (and many cases the engine) are mounted along with the operator's cab. The counterweight is typically supported on the rear of the upperstructure and the boom or other front end attachment is mounted on the front.

Up to means "up to and including."

Vertical hitch means a method of rigging a sling in which the load is attached to the loop eye or end fitting at one end of the sling and the loop eye or end fitting at the other end is attached to the lifting device. Any hitch less than five degrees from the vertical may be considered a vertical hitch.

Wire rope means a flexible rope constructed by laying steel wires into various patterns of multiwired strands around a core system to produce a helically wound rope.

Working load means the external load applied to the hoisting equipment, including the personnel lifting platform, its contents, and the load attaching equipment, such as lowered load block, shackles, and slings.

[Statutory Authority: RCW 49.17.010, 49.17.040, 49.17.050, 49.17.060 and chapter 49.17 RCW, and 29 C.F.R. 1926, Subpart CC. WSR 13-02-068, § 296-155-52902, filed 12/31/12, effective 2/1/13. Statutory Authority: RCW 49.17.010, 49.17.040, 49.17.050, 49.17.440, 49.17.060, and 29 C.F.R. 1926, Subpart CC. WSR 12-01-086, § 296-155-52902, filed 12/20/11, effective 2/1/12. Statutory Authority: RCW 49.17.010, 49.17.040, 49.17.050, 49.17.060, and chapter 49.17 RCW. WSR 10-14-100, § 296-155-52902, filed 7/6/10, effective 9/1/10. Statutory Authority: RCW 49.17.010, 49.17.040, 49.17.050, 49.17.060, 49.17.400, 49.17.410, 49.17.420, 49.17.430, and 49.17.440. WSR 08-22-080, § 296-155-52902, filed 11/4/08, effective 1/1/10.]

WAC 296-155-531 Crane certifier accreditation process.

[Statutory Authority: RCW 49.17.010, 49.17.040, 49.17.050, 49.17.060, 49.17.400, 49.17.410, 49.17.420, 49.17.430, and 49.17.440. WSR 08-22-080, § 296-155-531, filed 11/4/08, effective 1/1/09.]

WAC 296-155-53100 Accreditation of crane certifiers of cranes and derricks—Requirements. (1) Any person engaging in the testing, examination or inspection for the certification of a crane, used in lifting at a construction site, must apply for and obtain a certificate of accreditation from the department pursuant to this rule. For the purposes of this rule an "accredited crane certifier" refers to any individual holding a certificate of accreditation pursuant to this regulation.

(2) Any person authorized by the department to certify maritime cranes prior to the effective date of this rule may continue to perform services under this regulation until January 1, 2012. Any accredited crane certifier desiring to continue providing services pursuant to this rule must have applied for and obtained a certificate of accreditation under these rules from the department prior to January 1, 2012. Maritime certifiers wishing to perform construction crane certifications must notify the department that they will perform construction crane certifications. In addition, the maritime certifier must specify which cranes they are qualified to inspect under their maritime certificate. The department may issue these individuals a provisional accreditation specifying the crane types they are authorized to inspect which will be valid through December 31, 2011, or upon expiration of their maritime certification, whichever is earlier. Any provisionally accredited crane certifier desiring to continue providing services pursuant to this rule must have applied for and obtained a certificate of accreditation under these rules from the department prior to January 1, 2012.

(3) Crane certifiers accredited by any other state or governmental entity may be authorized to inspect cranes in Washington state provided the certifier submits an application and resume along with the certificate of accreditation from that state or governmental entity, and the types of cranes they are authorized to inspect. The department may issue these individuals a provisional accreditation specifying the crane types they are authorized to inspect which will be valid through December 31, 2011, or upon expiration of their out-of-state certification, whichever is earlier. Any provisionally

accredited crane certifier desiring to continue providing services pursuant to this rule must have applied for and obtained a certificate of accreditation under these rules from the department prior to January 1, 2012.

(4) No person that has modified, altered, or repaired a crane which affected a load sustaining member of the crane may conduct the certifying inspection and proof load testing of that particular crane within the same certification period.

[Statutory Authority: RCW 49.17.010, 49.17.040, 49.17.050, 49.17.060, 49.17.400, 49.17.410, 49.17.420, 49.17.430, and 49.17.440. WSR 08-22-080, § 296-155-53100, filed 11/4/08, effective 1/1/09.]

WAC 296-155-53102 Accreditation—Application form and applicant qualifications. (1) An accreditation to certify cranes pursuant to this rule may be obtained by submitting a completed application to the division of occupational safety and health (DOSH) and successfully completing written examinations developed and administered by the department or its authorized representative. Application forms may be obtained by calling the:

Crane certification section of DOSH 360-902-4943 or by written request to:

P.O. Box 44650, Olympia, WA 98504-4650

(2) An applicant seeking an accreditation must satisfy all of the following criteria:

(a) An application with an attached resume must be submitted to the department based on experience with the various crane types per the ASME B30 series. The application and resume must include knowledge, training and experience with verifiable references.

(b) All applicants must possess knowledge of chapter 296-155 WAC, Safety standards for construction work, as well as American Society of Mechanical Engineers (ASME) standards, relating to the design, testing, inspection and operation of cranes, including those specifically applicable to the types of cranes for which an accreditation will be issued.

(c) All applicants must demonstrate at least five years crane related experience, of which two years must be actual crane inspection activities. The other three years may include experience in duties such as a crane operator, crane mechanic, crane shop foreman, crane operations supervision, or rigging specialist. Related education may be substituted for related experience at a ratio of two years of education for one year of experience up to three years. Related education could include such courses in engineering, physics, applied mathematics, applied science courses in nondestructive testing, construction technology, technical courses in heavy equipment mechanic, welding technology, etc.

(3) Application form. Any application for accreditation will be accepted by the department upon the filing of a completed application. All information and attachments must be given under penalty of perjury. The application must include, but not be limited to, the following:

(a) A statement of the crane types per the ASME B30 series the applicant desires to certify pursuant to the accreditation.

(b) A statement of qualifications and experience, including their capacities, satisfying at a minimum the criteria set forth in this section as well as any and all other qualifications the applicant wishes the department to consider.

(c) Any other relevant information the applicant desires to be considered by the department.

(4) Written examinations. Applicants to be approved for accreditation must successfully complete the written examinations administered by the department or its authorized representative.

(a) Once the department receives the application and resume, the department will make the determination and notify the applicant if they meet the minimum qualifications to take the written examinations.

(b) The first written examination will include a general knowledge of operation, testing, inspection and maintenance requirements, and the duties and recordkeeping responsibilities required by this rule.

(c) The other written examinations will include safe operating and engineering principles and practices with respect to specific crane types subject to the accreditation, including inspection and proof loading requirements.

[Statutory Authority: RCW 49.17.010, 49.17.040, 49.17.050, 49.17.060, 49.17.400, 49.17.410, 49.17.420, 49.17.430, and 49.17.440. WSR 08-22-080, § 296-155-53102, filed 11/4/08, effective 1/1/09.]

WAC 296-155-53104 Issuance of accreditation. (1) The department may impose restrictions on the scope and use of the accreditation, such as limiting it to specific types of cranes based upon the qualifications of the applicant. The accreditation issued by the department will identify any limitations imposed by the department and the types of cranes the certifier is authorized to certify.

(2) The department must deny issuance of an accreditation if the applicant does not satisfy the requirements of this rule.

[Statutory Authority: RCW 49.17.010, 49.17.040, 49.17.050, 49.17.060, 49.17.400, 49.17.410, 49.17.420, 49.17.430, and 49.17.440. WSR 08-22-080, § 296-155-53104, filed 11/4/08, effective 1/1/09.]

WAC 296-155-53106 Accreditation application—Processing time. (1) Within forty-five calendar days of receipt of a completed application for an accreditation, the department must inform the applicant in writing that it is either complete and accepted for filing or that it is deficient and what specific information or documentation is required to complete the application and will inform the applicant if the applicant is eligible to take the written examination. An application is considered complete if it is in compliance with the requirements of this rule.

(2) Within seventy-five calendar days from the date of completion of the written examinations, the department must inform the applicant in writing of its decision regarding the issuance of the certificate of accreditation.

[Statutory Authority: RCW 49.17.010, 49.17.040, 49.17.050, 49.17.060, 49.17.400, 49.17.410, 49.17.420, 49.17.430, and 49.17.440. WSR 08-22-080, § 296-155-53106, filed 11/4/08, effective 1/1/09.]

WAC 296-155-53108 Duration and renewal of an accreditation. (1) The accreditation will be valid for three years. Crane certifiers must complete forty hours of crane related training every three years, in courses recognized by the department.

(2) Application for renewal must be filed with the department not less than sixty days prior to expiration of the

accredited crane certifier's certification. A renewal may be obtained by filing a completed application for renewal meeting the requirements of WAC 296-155-53102 hereof providing the applicant has been actively inspecting cranes during their prior accreditation period. An applicant is considered active if he/she has certified/inspected at least twenty-one cranes during their accreditation period. If the applicant certified cranes in another state, then that applicant must provide documentation showing they were active during their accreditation period. An applicant who has not certified/inspected at least twenty-one cranes during the accreditation period may take the written exams to become recertified.

(3) At a minimum, all applicants for renewal must successfully complete the written examinations every six years.

[Statutory Authority: RCW 49.17.010, 49.17.040, 49.17.050, 49.17.060, and chapter 49.17 RCW. WSR 10-14-100, § 296-155-53108, filed 7/6/10, effective 9/1/10. Statutory Authority: RCW 49.17.010, 49.17.040, 49.17.050, 49.17.060, 49.17.400, 49.17.410, 49.17.420, 49.17.430, and 49.17.440. WSR 08-22-080, § 296-155-53108, filed 11/4/08, effective 1/1/09.]

WAC 296-155-53110 Revocation or suspension of an accreditation. (1) The department may suspend or revoke a certificate issued under the provisions of these rules upon the following grounds:

(a) Permitting the duplication or use of one's own accreditation certificate by another;

(b) Performing work for which accreditation has not been received;

(c) Any person who obtains accreditation through fraudulent representation of accreditation requirements such as education, training, professional registration, or experience;

(d) Any person who falsifies training documentation;

(e) The holder of the certificate is found to be incompetent to carry out the work for which the certificate was issued;

(f) Gross negligence, gross incompetence, a pattern of incompetence, or fraud in the certification of a crane;

(g) Willful or deliberate disregard of any occupational safety standard while certifying a crane;

(h) Misrepresentation of a material fact in applying for, or obtaining, a license to certify under this chapter;

(i) Failure by an accredited crane certifier to maintain records;

(j) Failure by an accredited crane certifier to report crane safety deficiencies affecting the safe operation of a crane while in the process of conducting an annual certification inspection;

(k) Failure to meet or comply with the requirements of this rule or the limitations imposed on the accreditation; or

(l) Performance of work not in compliance with applicable laws and regulations.

(2) Before any certificate may be suspended or revoked, the certificate holder must be given written notice of the department's intention, mailed by certified mail, return receipt requested to the address as shown on the application form. The notice must specify the reasons for the department action. The department must also include within the notice of revocation or suspension specific conditions which must be met before the applicant will be entitled to apply for a new certification.

(3) A suspension or revocation order may be appealed to the division of occupational safety and health (DOSH) or the board of industrial insurance appeals within fifteen working days after the suspension or revocation order is entered. The notice of appeal may be filed with the department or the board of industrial insurance appeals and must include the accredited certifier's name, address, certifier number, telephone number, reason for appeal, their signature and date. DOSH may reassume jurisdiction over the matter following the timelines set out for appeal in WAC 296-900-17005. Should DOSH reassume jurisdiction over the matter, the process for reassumption outlined in WAC 296-900-17005 must be followed. If the accredited certifier does not agree with the department's redetermination, the matter will be forwarded to the board of industrial insurance appeals upon receiving further appeal from the accredited certifier. The board of industrial insurance appeals must hold the hearing in accordance with procedures established in RCW 49.17.140. Any party aggrieved by an order of the board of industrial insurance appeals may obtain superior court review in the manner provided in RCW 49.17.150.

(4) The filing of an appeal must not stay the suspension or revocation, and such action must remain in effect until such time as the applicant presents proof that the specified written conditions required by the department are met or until otherwise ordered after resolution of the appeal.

[Statutory Authority: RCW 49.17.010, 49.17.040, 49.17.050, 49.17.440, 49.17.060, and 29 C.F.R. 1926, Subpart CC. WSR 12-01-086, § 296-155-53110, filed 12/20/11, effective 2/1/12. Statutory Authority: RCW 49.17.010, 49.17.040, 49.17.050, 49.17.060, 49.17.400, 49.17.410, 49.17.420, 49.17.430, and 49.17.440. WSR 08-22-080, § 296-155-53110, filed 11/4/08, effective 1/1/09.]

WAC 296-155-53112 Monitoring of accredited crane certifiers. The division of occupational safety and health must monitor accredited crane certifiers to ensure that these certifiers certify cranes in accordance with all applicable Washington state laws and regulations. Monitoring activities will include, but not be limited to, audits of crane certifier's activities, complaint inspections, referrals, or accident investigations.

[Statutory Authority: RCW 49.17.010, 49.17.040, 49.17.050, 49.17.060, 49.17.400, 49.17.410, 49.17.420, 49.17.430, and 49.17.440. WSR 08-22-080, § 296-155-53112, filed 11/4/08, effective 1/1/09.]

WAC 296-155-53114 Issuance of temporary and annual certificates of operation. (1) Accredited crane certifiers will issue a temporary certificate of operation if upon inspection and load proof testing no deficiencies were found that would affect the safe operation of the crane.

(2) The accredited crane certifier will submit inspection worksheets and proof of load testing to the department within ten working days from the completion of the inspection and load proof test for consideration of the department for the issuance of a permanent certificate of operation.

(3) If the accredited crane certifier upon inspection of a crane identifies deficiencies that would affect the safe operation or load handling capabilities of the crane, the accredited crane certifier must notify the department within five working days from completion of the on-site inspection by submitting the worksheet that identifies the deficiencies. If deficiencies are found that affect the safe operation or load handling capabilities of the crane, no temporary certificate of operation will be issued until all identified deficiencies have been cor-

rected and verified by an on-site visit by an accredited crane certifier.

(4) After the accredited crane certifier has verified that all deficiencies have been corrected and the crane has successfully passed a load proof test, the accredited crane certifier will issue a temporary certificate of operation. The accredited crane certifier will submit inspection worksheets and proof of load testing to the owner or lessee and within ten days of completion of the inspection to the department for consideration of the department for the issuance of an annual certificate of operation.

(5) The accredited crane certifier must attach an identification sticker if not already attached and legible to each crane. The identification sticker number must be entered on the inspection worksheet submitted to the department. Identification stickers may only be removed by a department representative or an accredited crane certifier.

(6) Certificates of operation issued by the department under the crane certification program established in this section are valid for one year from the effective date of the temporary operating certificate issued by the certified crane inspector.

(7) The temporary or annual certificate of operation must be posted in the operator's cab or with the operator's manual.

(8) Maintaining required records. Accredited crane certifiers are required to maintain complete and accurate records pertaining to each crane of all inspections, tests and other work performed as well as copies of all notices of crane safety deficiencies, verifications of correction of crane safety deficiencies, and crane certifications issued for the previous five years and provide these records to the department upon request. Failure by an accredited crane certifier to maintain required records may result in accreditation suspension or revocation.

[Statutory Authority: RCW 49.17.010, 49.17.040, 49.17.050, 49.17.440, 49.17.060, and 29 C.F.R. 1926, Subpart CC. WSR 12-01-086, § 296-155-53114, filed 12/20/11, effective 2/1/12. Statutory Authority: RCW 49.17.010, 49.17.040, 49.17.050, 49.17.060, 49.17.400, 49.17.410, 49.17.420, 49.17.430, and 49.17.440. WSR 08-22-080, § 296-155-53114, filed 11/4/08, effective 1/1/10.]

WAC 296-155-532 Crane certification requirements for cranes.

[Statutory Authority: RCW 49.17.010, 49.17.040, 49.17.050, 49.17.060, 49.17.400, 49.17.410, 49.17.420, 49.17.430, and 49.17.440. WSR 08-22-080, § 296-155-532, filed 11/4/08, effective 1/1/10.]

WAC 296-155-53200 General inspection criteria, wire rope inspection and removal criteria, and preproof load test requirements for all cranes. (1) The accredited crane certifier must review the following documents as part of the crane certification process:

(a) Crane maintenance records of critical components to ensure maintenance of these components has been performed in accordance with the manufacturer's recommendations.

(b) Crane monthly and annual inspection documentation.

(2) Safety devices. Make sure all safety devices are installed on equipment in accordance with the requirements located in WAC 296-155-53410.

(3) Operational aids. Operations must not begin unless operational aids are in proper working order, except where the owner or lessee meets the specified temporary alternative measures. See WAC 296-155-53412 for the list of operational aids.

Note: All accredited crane certifiers must meet and follow the requirements relating to fall protection, located in chapter 296-155 WAC, Part C-1, Fall restraint and fall arrest.

(4) General.

(a) The accredited crane certifier must determine that the configurations of the crane are in accordance with the manufacturer's equipment criteria.

(b) Where the manufacturer equipment criteria are unavailable, a registered professional engineer (RPE), familiar with the type of equipment involved, must ensure criteria are developed for the equipment configuration.

(5) Wire rope.

(a) Wire ropes must meet the crane or wire rope manufacturer's specifications for size, type and inspection requirements. In the absence of the manufacturer's specifications, follow the requirements for removal criteria located in this section, including Table 1.

Table 1 - Wire Rope Inspection/Removal Criteria
(See also Figure 1 - Wire Rope)

Category of Crane Types	Running Ropes* # of broken wires in		Rotation Resistant* # of broken wires in		Standing Ropes* # of broken wires	
	1 rope lay	1 strand in 1 lay	Specified diameters		In 1 lay beyond end connection	At end connection
Mobile	6	3	2 (in 6xd)	4 (in 30xd)	3	2
Articulating	6	3	Consult rope mfg.	Consult rope mfg.	3	2
Tower	12	4	2 (in 6xd)	4 (in 30xd)	3	3
Self-Erector	6	3	2 (in 6xd)	4 (in 30xd)	3	2
Overhead & Bridge	12	4	2 (in 6xd)	4 (in 30xd)	—	—
Derricks	6	3	Consult rope mfg.	Consult rope mfg.	3	2

*** Also remove if you detect 1 wire broken at the contact point with the core or adjacent strand; so called valley breaks or evidence from any heat damage from any cause.**

Note: xd means times the "diameter."

(b) The accredited crane certifier must perform a complete and thorough inspection covering the surface of the working range plus three additional wraps on the drum of the wire ropes.

(c) If a deficiency is identified, an immediate determination must be made by the accredited crane certifier as to whether the deficiency constitutes a safety hazard. If the deficiency is determined to constitute a safety hazard, the crane must not be certified until:

(i) The wire rope is replaced and verified by the accredited crane certifier; or

(ii) If the deficiency is localized, the problem is corrected by severing the wire rope; the undamaged portion may continue to be used. Joining lengths of wire rope by splicing is prohibited.

(d) Remove wire rope from service if reduction from nominal diameter is greater than five percent.

(e) Replacement rope must be of a compatible size and have a strength rating at least as great as the original rope furnished or recommended by the crane manufacturer.

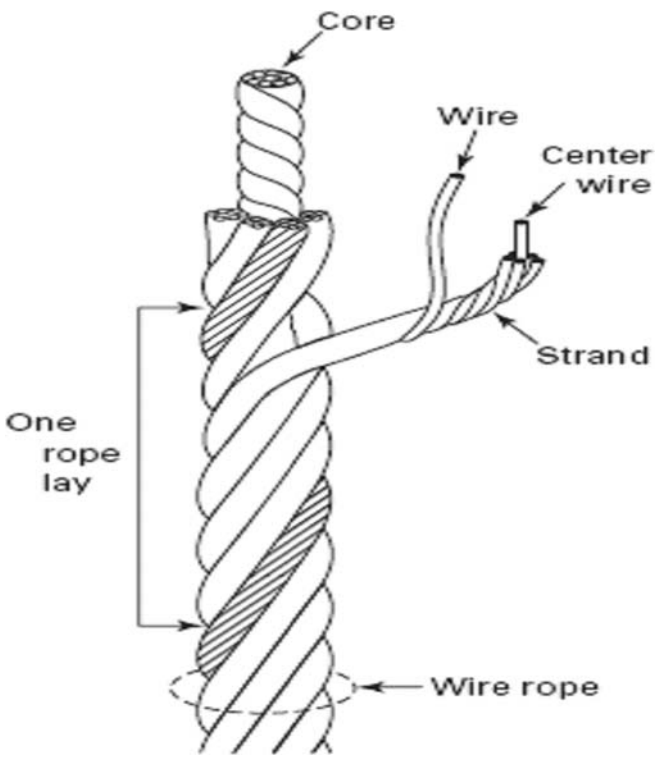

Figure 1 - Wire Rope

(6) Sheaves.

(a) Sheave grooves must be free from surface defects that could damage the rope. The cross-sectional radius at the bottom of the groove should be such as to form a close fitting saddle for the size of rope used. The sides of the groove must be tapered outward and rounded at the rim to facilitate entrance of the rope into the groove. Flange rims must run true about the axis of rotation.

(e) Hooks for deformation, cracks, excessive wear, or damage such as from chemicals or heat;

(b) Sheave guards must be in place to:

(i) Guide the rope back into the sheave groove, when using ropes that can be momentarily unloaded.

(ii) Prevent ropes from becoming fouled when the block is lying on the ground with loose ropes.

(c) Sheave bearings, except for permanently lubricated ones, must have a means of lubrication.

(7) Prior to performing a proof load test:

(a) A safe test area must be selected and all traffic and unauthorized personnel and equipment must be cleared from test area. This test area must be roped off or otherwise secured to prevent entry of unauthorized personnel and equipment;

(b) Rigging gear must be inspected by a qualified person prior to using for load test of crane;

(c) The employer must ensure all load test personnel understand the safety procedures of the test;

(d) Proof load tests, with the exception of tower cranes, are overload tests and extreme caution must be observed at all times. Personnel must remain clear of suspended loads and areas where they could be struck in the event of boom failure. The test load must be raised only to a height sufficient to perform the test;

(e) During tests, safe operating speeds must be employed. Rated speeds in accordance with manufacturer's specifications need not be attained. Emphasis must be placed on the ability to safely control loads through all motions at normal speeds;

(f) Proof load tests require the use of freely suspended certified weights, or scaled weights using a certified scale with a current certificate of calibration; however, line pull test can be accomplished using a static test and a certified scale with a current certificate of calibration;

(g) Proof load tests must not exceed the manufacturer's specifications. Where these specifications are unavailable, a registered professional engineer familiar with the type of equipment involved must develop written specifications.

[Statutory Authority: RCW 49.17.010, 49.17.040, 49.17.050, 49.17.440, 49.17.060, and 29 C.F.R. 1926, Subpart CC. WSR 12-01-086, § 296-155-53200, filed 12/20/11, effective 2/1/12. Statutory Authority: RCW 49.17.010, 49.17.040, 49.17.050, 49.17.060, and chapter 49.17 RCW. WSR 10-14-100, § 296-155-53200, filed 7/6/10, effective 9/1/10. Statutory Authority: RCW 49.17.010, 49.17.040, 49.17.050, 49.17.060, 49.17.400, 49.17.410, 49.17.420, 49.17.430, and 49.17.440. WSR 08-22-080, § 296-155-53200, filed 11/4/08, effective 1/1/10.]

WAC 296-155-53202 Additional inspection criteria and proof load testing—Mobile cranes. (1) After it is determined that the crane configurations meet the criteria in WAC 296-155-53200, the accredited crane certifier must conduct a visual inspection of the following components, if applicable, which can be visually inspected without disassembly (not including removal of inspection covers):

(a) All control and drive mechanisms for adjustments interfering with proper operation and for excessive wear or contamination by lubricants or other foreign matter;

(b) Air, hydraulic, and other pressurized lines for deterioration or leakage, particularly those which flex in normal operation;

(c) Hydraulic system for proper fluid level;

(d) Safety latches on hooks for damage;

(f) A legible and applicable operator's manual and load chart is in the operator's cab or station;

(g) A portable fire extinguisher, with a basic minimum extinguishing rating of ten BC must be installed in the cab or at the machinery housing;

(h) Crane cleanliness and housekeeping. Inspect for trash, oil, grease, debris or excessive dirt on crane components and catwalks, if applicable;

(i) Wire rope reeving for compliance with the manufacturer's specifications;

(j) Wire rope, in accordance with WAC 296-155-53200(5);

(k) Electrical apparatus for malfunctioning, signs of apparent excessive deterioration, dirt or moisture accumulation;

(l) Tires (when in use) for proper inflation and condition;

(m) Ground conditions around the equipment for proper support, including ground settling under and around outriggers and supporting foundations, groundwater accumulation, or similar conditions;

(n) The equipment for level position;

(o) Operator cab windows for significant cracks, breaks, or other deficiencies that would hamper the operator's view;

(p) Rails, rail stops, rail clamps and supporting surfaces when the equipment has rail traveling;

(q) Equipment structure (including the boom and, if equipped, the jib):

(i) Structural members: Deformed, cracked, or significantly corroded.

(ii) Bolts, rivets and other fasteners: Loose, failed or significantly corroded.

(iii) Welds for cracks.

(r) Sheaves and drums for cracks or significant wear;

(s) Parts such as pins, bearings, shafts, gears, rollers and locking devices for distortion, cracks or significant wear;

(t) Brake and clutch system parts, linings, pawls and ratchets for excessive wear;

(u) Safety devices and operational aids for proper operation (including significant inaccuracies);

(v) Gasoline, diesel, electric, or other power plants for safety-related problems (such as leaking exhaust and emergency shut-down feature), condition and operation;

(w) Chains and chain drive sprockets for excessive wear of sprockets and excessive chain stretch;

(x) Travel steering, brakes, and locking devices, for proper operation;

(y) Tires for damage or excessive wear;

(z) Hydraulic, pneumatic and other pressurized hoses, fittings and tubing, as follows:

(i) Flexible hose or its junction with the fittings for indications of leaks.

(ii) Threaded or clamped joints for leaks.

(iii) Outer covering of the hose for blistering, abnormal deformation or other signs of failure/impending failure.

(iv) Outer surface of a hose, rigid tube, or fitting for indications of excessive abrasion or scrubbing.

(aa) Hydraulic and pneumatic pumps and motors, as follows:

(i) Performance indicators: Unusual noises or vibration, low operating speed.

(ii) Loose bolts or fasteners.

(iii) Shaft seals and joints between pump sections for leaks.

(bb) Hydraulic and pneumatic cylinders, as follows:

(i) Drifting.

(ii) Rod seals and welded joints for leaks.

(iii) Cylinder rods for scores, nicks and dents.

(iv) Case (barrel) for significant dents.

(v) Rod eyes and connecting joints: Loose or deformed.

(cc) Outrigger pads/floats and slider pads for excessive wear or cracks; cribbing/dunnage for proper installation;

(dd) Electrical components and wiring for cracked or split insulation and loose or corroded terminations;

(ee) Legible warning labels and decals as required by the manufacturer;

(ff) Operator seat: Missing or unusable;

(gg) Equipped with original, or the equivalent, steps, ladders, handrails, guards;

(hh) Steps, ladders, handrails, and guards are in safe and usable condition;

(2) Crane deficiencies. If the accredited crane certifier determines other findings need to be monitored, the accredited crane certifier must provide written notification to the owner or lessee.

(3) Operational testing. An operational test must be made without a load applied to the hook of the following items if they are applicable to the crane to ensure they function correctly:

(a) Load lifting/hoisting and lowering mechanisms;

(b) Boom lifting/hoisting and lowering mechanisms;

(c) Boom extension and retraction mechanism;

(d) Swing mechanism;

(e) Travel mechanism;

(f) Brakes and clutches;

(g) Limit, locking, and safety devices;

(h) Suspension systems for cranes that work on rubber (tires); and

(i) During the operational testing, special attention must be paid to hydraulic and pneumatic valves: Spools (sticking, improper return to neutral, and leaks); leaks; valve housing cracks; relief valves.

(4) Annual and quadrennial proof load testing.

(a) Proof load tests must be completed on all hoist lines to at least one hundred percent but not to exceed one hundred and ten percent as configured. Any hoist line not proof load tested is not considered certified. The test load must be at least one hundred percent but not to exceed one hundred and ten percent of rated capacity (i.e., for the crane's configuration of reeving, boom length, etc.). The rated capacity must be the capacity shown on the posted load chart or as limited by other factors such as hook block capacity or wire rope line pull if the crane is not fully reeved. The test load includes the weight of (or deduction values for) the hook, block, slings, and auxiliary lifting devices (and for some cranes hoist wire rope not accounted for in load charts), and the combined weight deduction values must be subtracted from the nominal test load in order to determine the amount of test weights to be used. Follow original equipment manufacturer (OEM) load chart instructions for weight deduction values. Check accuracy of load indicators where installed. Test procedures for these cranes must follow OEM procedures and recommendations.

(b) Annual proof load testing. After the crane has passed the visual and operational tests, a proof load test must be conducted in the as-configured condition and must be performed within the structural section of the manufacturer's load chart, as applicable. This test must be documented on the form or in the format approved by the department. A copy of this completed form and inspection worksheets must be sent to the department within ten working days upon completion of the examination.

(c) Free rated load test ("on rubber"). Check the stability and operation of crane, carrier, wheels, tires, tracks, brakes, etc., under load by performing the following tests, when lifting without outriggers and/or traveling with the load are permitted at the activity for the type of crane being tested.

Note: Ensure all free rated load tests "on rubber" lifting requirements established by the OEM are complied with. Attach taglines to the load to control oscillation. For cranes with outriggers, extend outriggers and maintain minimal clearance (three to four inches) above ground. Test personnel must stand clear of tires during load tests. This test is only required if the owner/lessee wants an "on rubber" certification. If the crane has "on rubber" capabilities and the owner does not desire this certification, the crane certifier must document it on the certification document.

(i) Maximum free rated load. Hoist maximum free rated test load at minimum possible radius over the rear (or over the front as required by the OEM). Slowly boom down to the maximum radius for the load, with boom and load hoist pawls (dogs) engaged where applicable, complete (d)(i)(A) and (B) of this subsection.

(A) Rotate through the appropriate working arc;

(B) Travel a minimum of fifty feet with test load over the rear (or front as required by the OEM) with the boom parallel to the longitudinal axis of the crane carrier.

(ii) Stability test. Repeat the step in (d)(i) of this subsection with a test load corresponding to the radii determined as follows: For telescoping boom cranes, test with the boom approximately halfway between fully retracted and fully extended but do not exceed OEM's boom length limitation for lifting on rubber. If no ratings are governed by stability, no stability test is required.

Note: When lifting test loads, always lift the load well within the maximum radius and slowly boom down to a premeasured radius. Lift the test load only high enough to perform the required tests.

[Statutory Authority: RCW 49.17.010, 49.17.040, 49.17.050, 49.17.440, 49.17.060, and 29 C.F.R. 1926, Subpart CC. WSR 12-01-086, § 296-155-53202, filed 12/20/11, effective 2/1/12. Statutory Authority: RCW 49.17.010, 49.17.040, 49.17.050, 49.17.060, and chapter 49.17 RCW. WSR 10-14-100, § 296-155-53202, filed 7/6/10, effective 9/1/10. Statutory Authority: RCW 49.17.010, 49.17.040, 49.17.050, 49.17.060, 49.17.400, 49.17.410, 49.17.420, 49.17.430, and 49.17.440. WSR 08-22-080, § 296-155-53202, filed 11/4/08, effective 1/1/10.]

WAC 296-155-53204 Additional inspection criteria and proof load testing—Articulating boom cranes. (1) After it is determined that the crane configurations meet the criteria in WAC 296-155-53200, the accredited crane certifier must visually inspect the following items, if applicable, on cranes for sound physical condition and that they are functional within the manufacturer's recommendations (not including removal of inspection covers):

(a) All control and drive mechanisms for adjustments interfering with proper operation and for excessive wear or contamination by lubricants or other foreign matter;

(b) Safety devices for malfunction;

(c) All hydraulic hoses, particularly those which flex in normal operation of crane functions;

(d) Hooks and latches for deformation, chemical damage, cracks, and wear;

(e) Rope reeving for compliance with crane manufacturer's specifications;

(f) Electrical apparatus for malfunctioning, signs of excessive deterioration, dirt, and moisture accumulation;

(g) Hydraulic system for proper oil level and leaks;

(h) Excessively worn or damaged tires. Recommended inflation pressure, cuts, and loose wheel nuts;

(i) Connecting pins and locking device for wear and damage;

(j) Deformed, cracked, or corroded members in the crane structure and carrier;

(k) Loose bolts, particularly mounting bolts;

(l) Cracked or worn sheaves and drums;

(m) Worn, cracked, or distorted parts such as pins, bearings, shafts, gears, rollers, and locking devices;

(n) Excessive wear on brake and clutch system parts and lining;

(o) Travel steering, braking, and locking devices, for malfunction;

(p) Hydraulic, pneumatic and other pressurized hoses, fittings and tubing, as follows:

(i) Flexible hose or its junction with the fittings for indications of leaks.

(ii) Threaded or clamped joints for leaks.

(iii) Outer covering of the hose for blistering, abnormal deformation or other signs of failure/impending failure.

(iv) Outer surface of a hose, rigid tube, or fitting for indications of excessive abrasion or scrubbing;

(q) Hydraulic and pneumatic pumps and motors, as follows:

(i) Performance indicators: Unusual noises or vibration, low operating speed.

(ii) Loose bolts or fasteners.

(iii) Shaft seals and joints between pump sections for leaks;

(r) Hydraulic and pneumatic cylinders, as follows:

(i) Drifting.

(ii) Rod seals and welded joints for leaks.

(iii) Cylinder rods for scores, nicks and dents.

(iv) Case (barrel) for significant dents;

(s) Crane cleanliness and housekeeping. Inspect for trash, oil, grease, debris or excessive dirt on crane components and catwalks, if applicable;

(t) Legible warning labels and decals as required by the manufacturer;

(u) A portable fire extinguisher, with a basic minimum extinguishing rating of ten BC must be installed in the cab or at the machinery housing;

(v) A legible and applicable operator's manual and load chart is in the operator's cab or station.

(2) Annual proof load testing of articulating boom cranes.

(a) Annual proof load testing. After the crane has passed the visual and operational tests, the accredited crane certifier must ensure a proof load test is conducted and must be performed within the structural and stability section of the manufacturer's load chart, as applicable. This test must be documented on the form or in the format approved by the department. A copy of this completed form and inspection worksheets must be sent to the department within ten working days upon completion of the examination.

(b) Test loads must not be less than one hundred percent or more than one hundred and ten percent of the rated load, unless otherwise recommended by the manufacturer.

(c) Hoist the test load to assure that the load is supported by the crane and held by the hoist brake(s).

(d) Swing the crane, if applicable, the full range of its swing.

(e) Boom the crane up and down within allowable working radius for the test load.

(f) Lower the test load, stop and hold the load with the brake(s).

[Statutory Authority: RCW 49.17.010, 49.17.040, 49.17.050, 49.17.440, 49.17.060, and 29 C.F.R. 1926, Subpart CC. WSR 12-01-086, § 296-155-53204, filed 12/20/11, effective 2/1/12. Statutory Authority: RCW 49.17.010, 49.17.040, 49.17.050, 49.17.060, 49.17.400, 49.17.410, 49.17.420, 49.17.430, and 49.17.440. WSR 08-22-080, § 296-155-53204, filed 11/4/08, effective 1/1/10.]

WAC 296-155-53206 Additional inspection criteria and proof load testing—Tower cranes. (1) Tower cranes and tower crane assembly parts must be inspected by a crane certifier both prior to assembly, following erection of the tower crane, after each climbing operation, or reconfiguring the boom, jib, or counterjib before placing the crane in service.

(2) The accredited crane certifier must verify a registered professional structural engineer, licensed under chapter 18.43 RCW, has certified that the crane foundations/structural supports and underlying soil are adequate support for the tower crane with its maximum overturning moment.

(3) Prior to erecting a tower crane on a nonstandard tower crane base, the accredited crane certifier must verify that the engineering configuration of this base has been reviewed and acknowledged as acceptable by an independent registered professional structural engineer, licensed under chapter 18.43 RCW.

(4) The accredited crane certifier must review the following documents as part of the crane certification process for the current location and inspection period:

(a) Crane maintenance records of critical components to ensure maintenance of these components has been performed in accordance with the manufacturer's recommendations;

(b) Crane monthly and annual inspection documentation.

(5) After it is determined that the crane configurations meet the criteria in WAC 296-155-53200, the accredited crane certifier must visually inspect the following items, if applicable, on tower cranes for sound physical condition and that they are functional within the manufacturer's recommendations (not including removal of inspection covers):

(a) All control and drive mechanisms for interfering with proper operation and for excessive wear or contamination by lubricants or other foreign matter;

(b) Motion limiting devices for proper operation with the crane unloaded; each motion should be inched into its limiting device by carefully running at slow speed;

(c) Load limiting devices for proper operation and accuracy of settings;

(d) Air, hydraulic, and other pressurized lines for deterioration or leakage, particularly those which flex in normal operation;

(e) Hydraulic system for proper fluid level;

(f) Hydraulic, pneumatic and other pressurized hoses, fittings and tubing, as follows:

(i) Flexible hose or its junction with the fittings for indications of leaks.

(ii) Threaded or clamped joints for leaks.

(iii) Outer covering of the hose for blistering, abnormal deformation or other signs of failure/impending failure.

(iv) Outer surface of a hose, rigid tube, or fitting for indications of excessive abrasion or scrubbing;

(g) Hydraulic and pneumatic pumps and motors, as follows:

(i) Performance indicators: Unusual noises or vibration, low operating speed.

(ii) Loose bolts or fasteners.

(iii) Shaft seals and joints between pump sections for leaks;

(h) Hydraulic and pneumatic cylinders, as follows:

(i) Drifting.

(ii) Rod seals and welded joints for leaks.

(iii) Cylinder rods for scores, nicks and dents.

(iv) Case (barrel) for significant dents;

(i) Electrical components for malfunctioning, signs of apparent excessive deterioration, dirt or moisture accumulation, wiring for cracked or split insulation, and loose or corroded terminations;

(j) Stationary cranes for manufacturer's recommended grounding of structure and power supply. Rail traveling cranes for grounding of each rail and the power supply per the manufacturer's recommendations;

(k) Runway rail and clamps. Inspect for loose, broken or missing clamps;

(l) Hooks and safety latches for deformation, cracks, excessive wear, or damage such as from chemicals or heat;

(m) Wedges and supports of climbing cranes for looseness or dislocation;

(n) Braces or guys supporting cranes' masts (towers) and anchor bolt base connections for looseness;

(o) Crane structure (including the boom, jib and counter jib):

(i) Structural members: Deformed, cracked, or significantly corroded.

(ii) Bolts, rivets and other fasteners: Loose, failed or significantly corroded.

(iii) Welds for cracks.

(p) Cracked or worn sheaves and drums;

(q) Worn, cracked, or distorted parts such as pins, bearings, shafts, gears, rollers, locking and clamping devices, sprockets, and drive chains or belts;

(r) Excessive wear on brake and clutch system parts, linings, pawls, and ratchets;

(s) Load, wind, and other indicators for inaccuracies outside the tolerances recommended by the manufacturer;

(t) Travel mechanisms for malfunction, excessive wear or damage;

(u) A legible and applicable operator's manual and load chart is in the operator's cab;

(v) Crane cleanliness and housekeeping. Inspect for trash, oil, grease, debris or excessive dirt on crane components and catwalks, if applicable;

(w) A portable fire extinguisher, with a basic minimum extinguishing rating of ten BC must be installed in the cab or at the machinery housing;

(x) When applicable, tower tie-in collars, struts, and connections to building structure are structurally sound, free of cracks, distortion, excessive wear or corrosion. Pins and structural bolts are tight and installed per the manufacturer's specification;

(y) Ballast blocks in place and secured per manufacturer's recommendations;

(z) For cranes that telescope, the raising mechanism operates within the manufacturer's specifications;

(aa) For cranes that top climb, the climbing frame operates within the manufacturer's specifications;

(bb) A means to prevent traveling tower cranes running into stops while under power;

(cc) A functional audible warning alarm that automatically sounds whenever the traveling tower crane travels;

(dd) Wire rope reeving for compliance with the manufacturer's specifications;

(ee) Wire rope, in accordance with WAC 296-155-53200(5);

(ff) Safety devices and operational aids for proper operation (including significant inaccuracies);

(gg) Legible warning labels and decals as required by the manufacturer;

(hh) Steps, ladders, handrails and guards are in safe and usable condition.

(6) Additional requirements for tower cranes prior to performing a proof load test.

Note: General requirements relating to preproof load tests for all cranes are located in WAC 296-155-53200.

(a) When tower cranes are erected, and before placing in service, all functional motions, motion limiting, load limiting devices, locking and safety devices, brakes and clutches must be tested for operation and be within the manufacturer's specification prior to placing the crane in operation.

(b) Proof load tests require the use of certified weights, or scaled weights using a certified scale with a current certificate of calibration.

(c) Functional motion test must be at crane manufacturer's rated load. Each test must include:

(i) Load hoisting and lowering;

(ii) Jib (boom) hoisting and lowering, or trolley travel;

(iii) Slewing motion;

(iv) Travel motion when rail mounted;

(v) Brakes and clutches; and

(vi) Limit, locking, and safety devices.

Note: Functional motion tests made after climbing or telescoping may be performed without a load.

(d) The functional motion test listed in (c) of this subsection must continue until all controls, drives, and braking systems have been engaged and have functioned per the crane manufacturer's specifications.

(e) Order in which tests of tower cranes are to be performed is as follows:

(i) Functional motion test without rated load;

(ii) Functional motion test at crane manufacturer's rated load. For other than traveling cranes, these tests may be combined with test of base structural support or foundation system given in (c) of this subsection;

(iii) Test of base structural support or foundation under (f) of this subsection.

(f) During functional motion tests, the crane's base structural support or foundation system must be visually checked by the accredited crane certifier. If any part of the crane's base structural support or foundation system shows excessive visual displacement, visual distress, or audible distress, then the lifted load must be lowered at hoist creep speed and all crane operations are to cease. An evaluation must then be made by the accredited crane certifier.

(7) Proof load testing of tower cranes. Setting hoist load limits for tower cranes.

(a) Annual proof load testing. After the crane has passed the visual and operational tests, the accredited crane certifier must ensure a proof load test is conducted and must be performed according to the manufacturer's recommendations. This test must be documented on the form or in the format approved by the department. A copy of this completed form and inspection worksheets must be sent to the department within ten working days upon completion of the examination.

(b) Tower crane hoist load limit switches must be set in accordance with the manufacturer's specifications using specified certified weights. Procedure is to be verified by the accredited crane certifier. In the absence of the manufacturer's specifications, hoist load limit switches must be verified by means of a static test using test loads of one hundred and two and one-half percent to one hundred and ten percent of the applicable ratings. Test loads are to be lifted at creep speed until just clear of the ground.

(c) Setting of hoist load limits must be documented on the form provided by the department. A copy of the completed form and inspection worksheets must be sent to the department within ten days upon completion of the examination.

(d) After erection of fixed freestanding tower cranes, the base structural support or foundation system on which the crane is supported must be tested before placing the crane in service. The test must be conducted with the crane manufacturer's rated load placed at maximum radius permitted by site conditions. When the base structural support or foundation is symmetrical, the crane's jib (boom) must be rotated through ninety degrees with ten minute stops at the starting position and at each forty-five degree position. When the support is asymmetrical, the crane's jib (boom) must be rotated through three hundred and sixty degrees with ten minute stops at the starting position and at each forty-five degree position.

(e) After erection of rail traveling tower cranes, the base structural support or foundation system to which the rail is attached must be tested before placing the crane in service. The test must be conducted with the crane manufacturer's rated load placed at maximum radius permitted by site conditions. The jib (boom) must be located over the bogie. The

crane must travel the entire length of runway, returning with the same load over the bogie on the opposite rail.

[Statutory Authority: RCW 49.17.010, 49.17.040, 49.17.050, 49.17.440, 49.17.060, and 29 C.F.R. 1926, Subpart CC. WSR 12-01-086, § 296-155-53206, filed 12/20/11, effective 2/1/12. Statutory Authority: RCW 49.17.010, 49.17.040, 49.17.050, 49.17.060, and chapter 49.17 RCW. WSR 10-14-100, § 296-155-53206, filed 7/6/10, effective 9/1/10. Statutory Authority: RCW 49.17.010, 49.17.040, 49.17.050, 49.17.060, 49.17.400, 49.17.410, 49.17.420, 49.17.430, and 49.17.440. WSR 08-22-080, § 296-155-53206, filed 11/4/08, effective 1/1/10.]

WAC 296-155-53208 Additional inspection criteria and proof load testing—Self-erecting tower cranes. (1) After it is determined that the crane configurations meet the criteria in WAC 296-155-53200, the accredited crane certifier must visually inspect the following items, if applicable, on cranes for sound physical condition and that they are functional within the manufacturer's recommendations (not including removal of inspection covers):

(a) For cranes that telescope the internal tower by a climbing frame, the climbing mechanism is structurally sound; is free of cracks, distortion, excessive wear or corrosion; operates within the manufacturer's specifications;

(b) Structural bolts are tightened;

(c) All control and drive mechanisms for interfering with proper operation and for excessive wear or contamination by lubricants or other foreign matter;

(d) Motion limiting devices for proper operation with the crane unloaded; each motion should be inched into its limiting device by carefully running at slow speed;

(e) Load limiting devices for proper operation and accuracy of settings;

(f) Air, hydraulic, and other pressurized lines for deterioration or leakage, particularly those which flex in normal operation;

(g) Hydraulic system for proper fluid level;

(h) Hydraulic, pneumatic and other pressurized hoses, fittings and tubing, as follows:

(i) Flexible hose or its junction with the fittings for indications of leaks.

(ii) Threaded or clamped joints for leaks.

(iii) Outer covering of the hose for blistering, abnormal deformation or other signs of failure/impending failure.

(iv) Outer surface of a hose, rigid tube, or fitting for indications of excessive abrasion or scrubbing;

(i) Hydraulic and pneumatic pumps and motors, as follows:

(i) Performance indicators: Unusual noises or vibration, low operating speed.

(ii) Loose bolts or fasteners.

(iii) Shaft seals and joints between pump sections for leaks;

(j) Hydraulic and pneumatic cylinders, as follows:

(i) Drifting.

(ii) Rod seals and welded joints for leaks.

(iii) Cylinder rods for scores, nicks and dents.

(iv) Case (barrel) for significant dents;

(k) Electrical components for malfunctioning, signs of apparent excessive deterioration, dirt or moisture accumulation, wiring for cracked or split insulation, and loose or corroded terminations;

(l) Ensure crane is grounded per manufacturer's specifications;

(m) Hooks and safety latches for deformation, cracks, excessive wear, or damage such as from chemicals or heat;

(n) Crane structure (including the boom, jib and counter jib):

(i) Structural members: Deformed, cracked, or significantly corroded.

(ii) Bolts, rivets and other fasteners: Loose, failed or significantly corroded.

(iii) Welds for cracks;

(o) Cracked or worn sheaves and drums;

(p) Worn, cracked, or distorted parts such as pins, bearings, shafts, gears, rollers, locking and clamping devices, sprockets, and drive chains or belts;

(q) Excessive wear on brake and clutch system parts, linings, pawls, and ratchets;

(r) Load, wind, and other indicators for inaccuracies outside the tolerances recommended by the manufacturer;

(s) A legible and applicable operator's manual and load chart is in the operator's station;

(t) Crane cleanliness and housekeeping. Inspect for trash, oil, grease, debris or excessive dirt on crane components and catwalks, if applicable;

(u) A portable fire extinguisher, with a basic minimum extinguishing rating of ten BC must be installed in the cab or at the machinery housing;

(v) Ballast blocks in place and secured per manufacturer's recommendations;

(w) Wire rope reeving for compliance with the manufacturer's specifications;

(x) Wire rope, in accordance with WAC 296-155-53200(5);

(y) Safety devices and operational aids for proper operation (including significant inaccuracies);

(z) Legible warning labels and decals as required by the manufacturer;

(aa) Steps, ladders, handrails and guards are in safe and usable condition.

(2) Additional requirements for self-erecting tower cranes prior to performing a proof load test.

Note: General requirements relating to preproof load tests for all cranes are located in WAC 296-155-53200.

(a) Functional motion test must be at crane manufacturer's rated load. Each test must include:

(i) Load hoisting and lowering;

(ii) Jib (boom) hoisting and lowering, or trolley travel;

(iii) Slewing motion;

(iv) Brakes and clutches;

(v) Limit, locking, and safety devices.

(b) The functional motion test listed in (a) of this subsection must continue until all controls, drives, and braking systems have been engaged and have functioned per the crane manufacturer's specifications.

(c) Order in which tests of self-erecting tower cranes are to be performed is as follows:

(i) Functional motion test without rated load;

(ii) Functional motion test at crane manufacturer's rated load. These tests may be combined with test of base structural support or foundation system given in (a) of this subsection.

(d) During functional motion tests, the crane's base structural support or foundation system must be visually checked by the accredited crane certifier. If any part of the crane's base structural support or foundation system shows excessive visual displacement, visual distress, or audible distress, then the lifted load must be lowered at hoist creep speed and all crane operations are to cease. An evaluation must then be made by the accredited crane certifier.

(3) Annual proof load testing of self-erecting tower cranes.

(a) Annual proof load testing. After the crane has passed the visual and operational tests, the accredited crane certifier must ensure a proof load test is conducted and must be performed according to the manufacturer's recommendations. This test must be documented on the form or in the format approved by the department. A copy of this completed form and inspection worksheets must be sent to the department within ten working days upon completion of the examination.

(b) The structural support or foundation examination during proof load test:

(i) This test must be conducted with the rated load placed at maximum radius permitted by site conditions. The superstructure must be rotated through three hundred sixty degrees with five-minute stops at each outrigger position. If any part of the support structure becomes displaced or distressed, all crane operations must stop until an evaluation is made by a qualified person.

(ii) For rail-mounted cranes, a load test must be conducted with the jib in the position causing maximum loading on one wheel or bogie. The test must comprise traveling the entire length of the runway, then returning with the same load on the other rail. If a sleeper or support becomes displaced or damaged, crane operations must stop until an evaluation is made by a qualified person or until track ballast has been reset, or repairs made and a satisfactory test performed.

(c) Self-erecting tower crane hoist load limit switches must be set in accordance with the manufacturer's specifications using specified certified weights. Procedure is to be verified by the accredited crane certifier.

(d) Setting of hoist load limits must be documented on the form provided by the department. A copy of the completed form and inspection worksheets must be sent to the department within ten days upon completion of the examination.

[Statutory Authority: RCW 49.17.010, 49.17.040, 49.17.050, 49.17.060, 49.17.400, 49.17.410, 49.17.420, 49.17.430, and 49.17.440. WSR 08-22-080, § 296-155-53208, filed 11/4/08, effective 1/1/10.]

WAC 296-155-53210 Additional inspection criteria and proof load testing—Overhead/bridge and gantry bridge cranes. (1) After it is determined that the crane configurations meet the criteria in WAC 296-155-53200, the accredited crane certifier must visually inspect, without disassembly, and if applicable, the following items on overhead and bridge cranes for sound physical condition and that they are functional within the manufacturer's recommendations (not including removal of inspection covers):

(a) Controllers. Control mechanisms for interfering with proper operation. Control and drive mechanisms for apparent excessive wear of components and contamination by lubricants, water or other foreign matter;

(b) Load hooks. Inspect for damage wear to hook nuts, safety latch and hook swivel. Check for deformation, cracks, excessive wear, or damage such as from chemicals or heat. Inspect blocks for wear to sheaves, check plates, and pins. Check for loose pins, bolts and guards;

(c) Sheaves and bearings. Check all sheaves and bearings for lubrication and excessive wear. Ensure sheaves turn freely. Check sheave pin locking device;

(d) Structural supports. Inspect for damage or bent girders, girder seat top plate, diaphragms and structural column connections. Check for loose bolts or rivets, and cracks;

(e) Bridge inspection.

(i) Check complete structure for broken, cracked, damaged, missing, or corroded parts and members.

(ii) Handrails, walkways, and ladders. Inspect for loose, missing, bent, deteriorated or misaligned members, loose bolts, rivets, broken welds and hangers;

(f) Brackets. Check for cracked or corroded welds, missing or loose bolts, bent or cracked brackets;

(g) End stops. Inspect for damaged wheels, broken welds, loose or missing bolts, damaged bumpers, missing pins or damaged plates;

(h) Runway rail and clamps. Inspect for loose, broken or missing clamps. Check the condition of railhead and side wear, rail splice plates and/or welds, rail gaps and associated bolts, wedges, connectors and rail switches;

(i) Crane alignment. Inspect for proper bridge end float while crane travels in both directions on runway. Check all corner connections for rust, shear marks, loose or missing bolts, nuts and washers. Inspect square marks and legibility of dimension;

(j) Wheels and bearings. Inspect wheels for wear, flat spots, chips, flange wear, cracks, loose axle pins, or securing devices. Check bearing clearance, chatter, loose bearing caps and lubrication;

(k) Trolley. Check for loose, missing, broken or bent members. Inspect for loose, faulty or missing coupling guards. Check for broken, loose or missing axle pins. Inspect for axle pins displaying excessive wear;

(l) Trolley rail. Inspect for bent or damaged members, loose bolts, rivets, guards, trolley rail clamps, end stops and broken welds. Check condition of rail head and side wear, rail splice plates and/or welds and rail gaps;

(m) Trolley conductors. Inspect insulators and clamps, loose connectors, bent, pitted or damaged wires or collectors;

(n) Shafts, couplings, and bearings. Inspect shafts for vibration, cuts and nicks, loose or worn keyways and misalignment. Check coupling for wear, loose bolts or keys and misalignment. Inspect bearing for clearance, chatter, loose bearing caps and proper lubrication;

(o) Gearing. Inspect gears for worn teeth, cracked teeth, superficial root cracks, pitting, unusual indentation or wear marks, full contact or end loading, loose set screws and keys. Check guards and covers. Inspect gear cases for excessive noise and vibration, proper lubrication and leaking;

(p) Wire rope and drum. Inspect wire rope for damage. Check rope clip fittings and associated mounting hardware for wear and damage. Inspect drum grooves for excessive wear. Inspect drum pedestal and bearing condition. Check for cracks in drum;

(q) Electrical items. Check all contacts for proper alignment and evidence of excess heating or unusual arcing. Inspect all coils, contact leads, shunts and wires, fuses or overload devices for loose connections and evidence of overheating. Inspect panel board and arc shields for cracks, loose bolts, dirt and moisture. Check panel marking for legibility. Inspect speed control resistors for damaged insulation, cracked or broken grids, loose connections, bolts and brackets;

(r) Motor. Inspect for damage, bearing noise, vibration and lubrication, spark and cleanliness of commutator and brush wear, loose hold down bolts and motor brackets. Inspect commutator or slip rings for evidence of overheating and brush sparking. Inspect motor leads and insulators, damaged or deteriorated insulation and loose connections. Inspect brush holder for proper clearance to commutator or slip rings, and freedom of brushes;

(s) Brakes. Inspect for wear in linkage, pins and cams, weakness of springs, wear and condition of lining, smoothness of the drum, heat check crack and clearance between drum or disk. Inspect for improper solenoid air gap; evidence of overheating; damaged brass, and loose core laminations; delay or restriction in opening of brakes;

(t) Hoist brakes. Inspect for wear in linkage, pins and cams, weakness of springs, wear and condition of lining, smoothness of drum, heat check cracks and clearance between drum or disk. Inspect for improper solenoid air gap; evidence of overheating; damaged brass, and loose core laminations; delay or restriction in opening of brakes;

(u) Limit switches. Remove covers and inspect all electrical and mechanical components for malfunction including contacts, springs, ratchets, pins, arm and insulators, rollers, cams and dogs. Inspect cover gaskets, counterweight guides. Check all securing bolts and guards. Check for weather or moisture damage. Check for proper operation;

(v) Crane cleanliness and housekeeping. Inspect for trash, oil, grease, debris or excessive dirt on crane components and catwalks, if applicable;

(w) Operation of crane controls. Operate all crane controls and check for proper operation. Check for smooth and regular motions without abnormal sensations, hesitations, binding, vibrations, shimmy, or irregularity;

(x) Warning device/fire protection. Inspect for proper operation of sirens, horns, bells and lights. Check switches and inspect wiring and connections;

(y) A legible and applicable operator's manual and load chart is in the operator's cab or station;

(z) A portable fire extinguisher, with a basic minimum extinguishing rating of ten BC must be installed in the cab or at the machinery housing.

(2) Annual proof load testing of bridge/overhead cranes.

(a) Annual proof load testing. After the crane has passed the visual and operational tests, the accredited crane certifier must ensure a proof load test is conducted and must be performed according to the manufacturer's recommendations or a registered professional structural engineer (RPSE). This test must be documented on the form or in the format approved by the department. A copy of this completed form and inspection worksheets must be sent to the department within ten working days upon completion of the examination.

(b) The proof load test must be at least one hundred percent but not to exceed one hundred twenty-five percent of the rated capacity.

(c) This test must be documented on the form or in the format approved by the department. A copy of this completed form and inspection worksheets must be sent to the department within ten working days upon completion of the examination.

(d) Hoist the test load a distance to assure that the load is supported by the crane and held by the hoist brake(s).

(e) Transport the test load by means of the trolley for the full length of the bridge, as practical.

(f) Transport the test load by means of the bridge for the full length of the runway in one direction with the trolley as close to the extreme right-hand end of the crane as practical, and in the other direction with the trolley as close to the left-hand end of the crane as practical.

(g) Lower the test load, and stop and hold the test load with the brake(s).

(h) Mechanical load brake tests. Hoist test load and hold for five minutes.

Release the holding brake, either mechanically or electrically to verify mechanical load brake function or hoist the rated load then lower, monitoring the hoist for any speed control issues.

[Statutory Authority: RCW 49.17.010, 49.17.040, 49.17.050, 49.17.440, 49.17.060, and 29 C.F.R. 1926, Subpart CC. WSR 12-01-086, § 296-155-53210, filed 12/20/11, effective 2/1/12. Statutory Authority: RCW 49.17.-010, 49.17.040, 49.17.050, 49.17.060, 49.17.400, 49.17.410, 49.17.420, 49.17.430, and 49.17.440. WSR 08-22-080, § 296-155-53210, filed 11/4/08, effective 1/1/10.]

WAC 296-155-53212 Additional inspection criteria and proof load testing—Derricks. (1) After it is determined that the derrick configurations meet the criteria in WAC 296-155-53200, the accredited derrick certifier must visually inspect the following items, if applicable, on derricks for sound physical condition and that they are functional within the manufacturer's recommendations (not including removal of inspection covers):

(a) All control and drive mechanisms for adjustments interfering with proper operation and for excessive wear or contamination by lubricants or other foreign matter;

(b) All chords and lacing, tension in guys, plumb of the mast, external indication of deterioration or leakage in air or hydraulic systems;

(c) Derrick hooks for deformation or cracks, distortion causing an increase in throat opening of five percent not to exceed one-quarter inch or as recommended by the manufacturer. Any wear exceeding ten percent (or as recommended by the manufacturer) of the original section dimension of the hook;

(d) Rope reeving for noncompliance with derrick manufacturer's specifications;

(e) Hoist brakes, clutches, and operating levers;

(f) Electrical apparatus for malfunctioning, signs of excessive deterioration, dirt and moisture accumulation;

(g) Structural members for deformation, cracks, and corrosion;

(h) Crane cleanliness and housekeeping. Inspect for trash, oil, grease, debris or excessive dirt on crane components and catwalks, if applicable;

(i) Bolts and rivets for tightness;

(j) Parts such as pins, bearings, shafts, gears, sheaves, drums, rollers, locking and clamping devices, for wear, cracks, and distortion;

(k) Gudgeon pin for cracks, wear and distortion;

(l) Foundation or supports for continued ability to sustain the imposed loads;

(m) A legible and applicable operator's manual and load chart is in the operator's cab or station;

(n) A portable fire extinguisher, with a basic minimum extinguishing rating of ten BC must be installed in the cab or at the machinery housing.

(2) Annual proof load testing of derricks.

(a) Annual proof load testing. After the derrick has passed the visual and operational tests, the accredited derrick certifier must ensure a proof load test is conducted and must be performed at the maximum and minimum boom angles or radii or as close to these as practical and at such intermediate radii as the derrick manufacturer or RPSE may deem necessary. This test must be documented on the form or in the format approved by the department. A copy of this completed form and inspection worksheets must be sent to the department within ten working days upon completion of the examination.

(b) Proof load tests and safe working load ratings must be based on the designed load ratings at the ranges of boom angle or operating radii. Proof loads must be as per the manufacturer's recommendations. When the manufacturer recommendations are not available follow the requirements in Table 2 below:

Table 2 - Derrick Load Test

Safe Working Load SWL	Proof Load
Up to 20 tons	25 percent in excess
20-50 tons	5 tons in excess
Over 50 tons	10 percent in excess

(c) Hoist the test load a few inches and hold to verify that the load is supported by the derrick and held by the hoist brake(s).

(d) Swing the derrick, if applicable, the full range of its swing, at the maximum allowable working radius for the test load.

(e) Boom the derrick up and down within the allowable working radius for the test load.

(f) Lower the test load, stop and hold the load with the brake(s).

(g) After satisfactory completion of a proof load test, the derrick and all component parts thereof shall be carefully examined in all applicable requirements in this section.

(h) This test must be documented on the form or in the format approved by the department. A copy of this completed form and inspection worksheets must be sent to the department within ten working days upon completion of the examination.

[Statutory Authority: RCW 49.17.010, 49.17.040, 49.17.050, 49.17.440, 49.17.060, and 29 C.F.R. 1926, Subpart CC. WSR 12-01-086, § 296-155-53212, filed 12/20/11, effective 2/1/12. Statutory Authority: RCW 49.17.-010, 49.17.040, 49.17.050, 49.17.060, 49.17.400, 49.17.410, 49.17.420, 49.17.430, and 49.17.440. WSR 08-22-080, § 296-155-53212, filed 11/4/08, effective 1/1/10.]

WAC 296-155-53214 Crane decertification and reinstatement. (1) If any of the following occur, the certification becomes invalid and must be inspected by an accredited crane certifier:

(a) Contact with an energized power line;

(b) Any overload, other than proof load testing, or one that has been approved in writing in advance by the crane manufacturer or a RPE;

(c) Any significant modifications or significant repairs of a load sustaining/bearing part that affects the safe operation of the crane/derrick.

(d) Any deficiency that affects the safe operation of the crane or derrick that has been identified by a qualified person or through an inspection by the department of labor and industries.

Note: Replacement of hoisting rope does not constitute decertification.

(2) The owner or lessee must notify the crane certification section by phone, 360-902-4943, or fax 360-902-5438, or e-mail at lnicranes@lni.wa.gov within twenty-four hours if any of the above occurs.

(3) The certification may be reinstated only after affected components have been reinspected by an accredited crane certifier. If the accredited crane certifier identifies any deficiencies during the reinspection, the deficiencies must be corrected before the certification can be reinstated. If the accredited crane certifier believes proof load testing should be conducted prior to reinstatement of the certification, proof load testing must be conducted. In the case of major modifications or repairs to important load sustaining/bearing parts, proof load testing must be performed prior to reinstatement. The accredited crane certifier must notify the department that the certification has been reinstated.

[Statutory Authority: RCW 49.17.010, 49.17.040, 49.17.050, 49.17.440, 49.17.060, and 29 C.F.R. 1926, Subpart CC. WSR 12-01-086, § 296-155-53214, filed 12/20/11, effective 2/1/12. Statutory Authority: RCW 49.17.-010, 49.17.040, 49.17.050, 49.17.060, 49.17.400, 49.17.410, 49.17.420, 49.17.430, and 49.17.440. WSR 08-22-080, § 296-155-53214, filed 11/4/08, effective 1/1/10.]

WAC 296-155-533 Qualifications and certification.

[Statutory Authority: RCW 49.17.010, 49.17.040, 49.17.050, 49.17.060, and chapter 49.17 RCW. WSR 10-14-100, § 296-155-533, filed 7/6/10, effective 9/1/10. Statutory Authority: RCW 49.17.010, 49.17.040, 49.17.050, 49.17.060, 49.17.400, 49.17.410, 49.17.420, 49.17.430, and 49.17.440. WSR 08-22-080, § 296-155-533, filed 11/4/08, effective 1/1/10.]

WAC 296-155-53300 Operator qualifications and certification. (1) Prior to operating any crane covered under chapter 296-155 WAC, Part L, with the exception of the trainee/apprentice requirements outlined in subsection (2) of this section and those cranes exempt in WAC 296-155-52900(3), the employer must ensure that the operator meets the following requirements:

(a) Has a valid crane operator certificate, for the type of crane to be operated, issued by a crane operator testing orga-

nization which has an accredited program, accredited by a nationally recognized accrediting agency. The operator certification must include a successful passing of a written and practical examination for each crane category listed in Table 3 and by crane type for mobile cranes.

(b) A determination through a written test that:

(i) The individual knows the information necessary for safe operation of the specific type of crane/derrick the individual will operate, including all of the following:

(A) The controls and operational/performance characteristics.

(B) Use of, and the ability to calculate, load/capacity information on a variety of configurations of the crane/derrick.

(C) Procedures for preventing and responding to power line contact.

(D) Technical knowledge similar to the subject matter criteria listed in WAC 296-155-56420 of this part applicable to the specific type of crane/derrick the individual will operate. Use of WAC 296-155-56420 criteria meets the requirements of this provision.

(E) Technical knowledge applicable to:

(I) The suitability of the supporting ground and surface to handle expected loads.

(II) Site hazards.

(III) Site access.

(F) This part, including applicable incorporated materials.

(ii) The individual is able to read and locate relevant information in the equipment manual and other materials containing information referred to in (i) of this subsection.

(c) A determination through a practical test that the individual has the skills necessary for safe operation of the crane/derrick, including the following:

(i) Ability to recognize, from visual and auditory observation, the items listed in WAC 296-155-53405(2).

(ii) Operational and maneuvering skills.

(iii) Application of load chart information.

(iv) Application of safe shut-down and securing procedures.

Notes:

- An operator's certificate issued by the accredited testing agency is valid for a five-year period, and must be renewed to ensure operators maintain qualified operator status.
- For self-erecting tower cranes, the department will accept a tower crane certification issued by a nationally accrediting testing agency.
- For derricks, the department will accept, at a minimum, a lattice boom truck or crawler mobile crane operator's certificate.
- An operator will be deemed qualified to operate a crane if the operator is certified under (a) of this subsection for the type and capacity of the crane or for higher-capacity crane of the same type.

(d) If there is no accredited written or practical test for operator certification available, the employer must ensure the operator has been completely trained, evaluated and tested by the employer on the operating procedures for the piece of equipment in use as recommended by the crane/equipment manufacturer and the applicable ASME standard. This process must be documented and made available upon request.

(e) Has crane hours of experience as shown in Table 3; and

(f) Pass a substance abuse test conducted by a recognized laboratory.

Exemption: When it is necessary in the performance of their duties, manufacture representatives, factory representatives and maintenance personnel are not required to be certified crane operators.

Crane Operator Experience for Cranes Used in the Construction Industry
Table 3

The 5 Categories of Cranes and their Types	Number of Hours of Actual Crane Operating Experience	Number of Hours of Crane Related Experience
(1) Mobile Cranes		
(a) Lattice Boom Crawler Cranes (LBC)	300 tons and above 1000 Hours	300 tons and above 1000 Hours
	Under 300 tons 500 Hours	Under 300 tons 500 Hours
(b) Lattice Boom Truck Cranes (LBT)	300 tons and above 1000 Hours	300 tons and above 1000 Hours
	Under 300 tons 500 Hours	Under 300 tons 500 Hours
(c) Large Telescopic Boom Cranes (Swing Cab) (TLL) (including digger derricks)	Over 130 tons 750 Hours	Over 130 tons 750 Hours
	Over 40 tons to 130 tons 250 Hours	Over 40 tons to 130 tons 250 Hours
	40 tons and under 40 Hours	40 tons and under 40 Hours

The 5 Categories of Cranes and their Types	Number of Hours of Actual Crane Operating Experience	Number of Hours of Crane Related Experience
(d) Small Telescopic Boom Cranes (Fixed Cab) (TSS) (including digger derricks)	15 tons and above 40 Hours	15 tons and above 40 Hours
	Over 5 tons and under 15 tons 20 Hours	Over 5 tons and under 15 tons 20 Hours
	5 tons and under 8 hours	5 tons and under 16 hours
(2) Articulating Boom Cranes	20 Hours	20 Hours
(3) Tower Cranes		
(a) Hammerhead	500 Hours	500 Hours
(b) Luffer	500 Hours	500 Hours
(c) Self-Erecting	50 Hours	50 Hours
(4) Overhead/Bridge and Gantry Cranes		
(a) Cab Operated	40 Hours	40 Hours
(b) Pendant/Remote	40 Hours	40 Hours
(5) Derricks (not including digger derricks)	20 Hours	500 Hours
Hours of actual crane operating experience. For all cranes: Time while the operator is at the controls of the crane; and/or has direct control of that crane; and/or a combination of operating hours within the same crane type. For mobile cranes: It also includes time while installing/removing boom sections, luffing boom, jib, extending and retracting outriggers/stabilizers, leveling crane, and replacing hoisting rope. For tower cranes: It includes time while jumping (increasing the height of the tower/mast). **Note:** Additional actual crane operator experience may account for crane related experience.		
Hours of crane related experience: Time as a signalperson/bellman, oiler, crane mechanic, crane inspector, formal classroom training, crane simulator operation, and a combination of operating hours on other categories of cranes.		

Note: Cranes and other lifting machines covered under this part that are exempt can be found in WAC 296-155-52900(3).

(2) Prequalification/certification training period. An employee who is not a qualified crane operator as outlined in subsection (1) of this section is permitted to operate the crane as part of his/her training providing the following requirements are met:

(a) The employee ("trainee/apprentice") must be provided with sufficient training prior to operating the crane to enable the trainee to operate the crane safely under limitations established by this section (including continuous supervision) and any additional limitations established by the employer.

(b) The tasks performed by the trainee/apprentice while operating the crane must be within the trainee's ability, as determined by the supervising qualified crane operator.

(c) Qualified crane/derrick operator. While operating the crane/derrick, the trainee/apprentice must be continuously supervised by a qualified crane/derrick operator who meets the following requirements:

(i) The qualified crane/derrick operator is an employee or agent of the trainee's/apprentice's employer.

(ii) The qualified crane/derrick operator under this section is familiar with the proper use of the crane's/derrick's controls.

(iii) While supervising the trainee/apprentice, the qualified crane/derrick operator performs no tasks that detract from the qualified crane/derrick operator's ability to supervise the trainee/apprentice.

(iv) For cranes other than tower cranes: The qualified crane/derrick operator and the trainee/apprentice must be in direct line of sight of each other. In addition, they must communicate verbally or by hand signal.

(v) For tower cranes: The qualified crane operator and the trainee/apprentice must be in direct communication with each other.

(d) The trainee/apprentice must not operate the crane in any of the following circumstances:

(i) If any part of the crane, load line or load (including rigging and lifting accessories), if operated up to the crane's maximum working radius in the work zone, could get within twenty feet of a power line that is up to three hundred fifty kV, or within fifty feet of a power line that is over three hundred fifty kV;

(ii) If the crane is used to hoist personnel;

(iii) In a multiple-crane or multiple load line lift situations; or

(iv) Multiple-lift rigging, as defined in WAC 296-155-52902, can only be accomplished by the trainee/apprentice when the qualified crane operator determines that the trainee's/apprentice's skills are sufficient for this high-skill work.

(v) Critical lifts, as defined in WAC 296-155-52902, can only be accomplished by the trainee/apprentice when the qualified crane operator determines that the trainee's/apprentice's skills are sufficient for this high-skill work.

(3) The employer must obtain documentation showing hours of crane operator experience and crane related experience separated out by crane type and capacity.

Note: The employer may accept a signed declaration from the crane operator attesting to actual hours of crane operator experience and crane related experience separated out by crane type and capacity. For sample declaration form see WAC 296-155-56425.

(4) The department may recognize crane operator certification from another state or territory of the United States as equivalent to qualified crane operator requirements if the department determines that the other jurisdiction's credentialing standards are substantially similar to the qualified crane operator requirements.

(5) Crane operator experience and crane related experience must be documented and separated out by crane type and capacity; this documentation need only show the minimum amount of hours as outlined in Table 3 above. If the employer is documenting crane operating and/or related crane experience hours, the employer must provide a copy of the hours to the operator as soon as practical, if requested.

[Statutory Authority: RCW 49.17.010, 49.17.040, 49.17.050, 49.17.060 and chapter 49.17 RCW, and 29 C.F.R. 1926, Subpart CC. WSR 13-02-068, § 296-155-53300, filed 12/31/12, effective 2/1/13. Statutory Authority: RCW 49.17.010, 49.17.040, 49.17.050, 49.17.440, 49.17.060, and 29 C.F.R. 1926, Subpart CC. WSR 12-01-086, § 296-155-53300, filed 12/20/11, effective 2/1/12. Statutory Authority: RCW 49.17.010, 49.17.040, 49.17.050, 49.17.060, and chapter 49.17 RCW. WSR 10-14-100, § 296-155-53300, filed 7/6/10, effective 9/1/10. Statutory Authority: RCW 49.17.010, 49.17.-040, 49.17.050, 49.17.060, 49.17.400, 49.17.410, 49.17.420, 49.17.430, and 49.17.440. WSR 08-22-080, § 296-155-53300, filed 11/4/08, effective 1/1/10.]

WAC 296-155-53302 Signal person qualifications. (1) The signal person must meet the qualification requirements (subsection (3) of this section) prior to giving any signals to a crane/derrick operator. This requirement must be met by using either Option (1) or Option (2).

(a) Option (1) - Third-party qualified evaluator. The signal person has documentation from a third-party qualified evaluator showing that the signal person meets the qualification requirements listed in subsection (3) of this section.

(b) Option (2) - Employer's qualified evaluator. The employer has its qualified evaluator assess the individual and determine that the individual meets the qualification requirements listed in subsection (3) of this section and provides documentation of that determination. An assessment by an employer's qualified evaluator under this option is not portable meaning other employers are not permitted to use this qualification to meet the requirements of this section.

(c) The employer must make the documentation for whichever option is used available at the site while the signal person is employed by the employer. The documentation must specify each type of signaling (e.g., hand signals, radio signals, etc.) for which the signal person meets the requirements of subsection (3) of this section.

(2) If subsequent actions by the signal person indicate that the individual may not meet the qualification requirements listed in subsection (3) of this section, the employer must not allow the individual to continue working as a signal person until retraining is provided and a reassessment is made in accordance with subsection (1) of this section that confirms that the individual meets the qualification requirements.

(3) Qualification requirements. Each signal person must:

(a) Know and understand the type of signals used. For example, if hand signals are used, the signal person must know and understand the standard method for hand signals.

(b) Be competent in the application of the type of signals used.

(c) Have a basic understanding of crane/derrick operation and limitations, including the crane dynamics involved in swinging and stopping loads and boom deflection from hoisting loads.

(d) Know and understand the relevant requirements of WAC 296-155-53406 and this section.

(e) Demonstrate that they meet the requirements in (a) through (d) of this subsection through an oral or written test, and through a practical test. All tests must be documented.

(4) Qualification period. A signal person qualification cannot exceed a five-year period; this qualification must be renewed every five years to ensure signal persons maintain qualified status. At a minimum, this renewal must include a documented written or oral or practical exam.

[Statutory Authority: RCW 49.17.010, 49.17.040, 49.17.050, 49.17.440, 49.17.060, and 29 C.F.R. 1926, Subpart CC. WSR 12-01-086, § 296-155-53302, filed 12/20/11, effective 2/1/12.]

WAC 296-155-53304 Repair, inspection, and maintenance employee qualifications. (1) Repair, inspection, and maintenance personnel are permitted to operate the crane/derrick only where all of the following requirements are met:

(a) The operation is limited to those functions necessary to perform maintenance, inspect or verify the performance of the crane/derrick.

(b) The personnel either:

(i) Operate the crane/derrick under the direct supervision of an operator who meets the requirements of WAC 296-155-53300, Operator qualification and certification; or

(ii) Are familiar with the operation, safe limitations, characteristics and hazards associated with the type of crane/derrick.

(2) Maintenance and repair personnel must meet the definition of a qualified person with respect to the crane/derrick and maintenance/repair tasks performed.

[Statutory Authority: RCW 49.17.010, 49.17.040, 49.17.050, 49.17.440, 49.17.060, and 29 C.F.R. 1926, Subpart CC. WSR 12-01-086, § 296-155-53304, filed 12/20/11, effective 2/1/12.]

WAC 296-155-53306 Rigger qualifications. (1) The rigger must meet the qualification requirements (subsection (3) of this section) prior to performing hoisting activities for assembly and disassembly work (WAC 296-155-53402 (19)(a)). A qualified rigger is required whenever employees are engaged in hooking, unhooking, or guiding the load, or in the initial connection of a load to a component or structure, and are within the fall zone (WAC 296-155-53400 (43)(c)). This requirement must be met by using either Option (1) or Option (2).

(a) Option (1) - Third-party qualified evaluator. The rigger has documentation from a third-party qualified evaluator

showing that the rigger meets the qualification requirements listed in subsection (3) of this section.

(b) Option (2) - Employer's qualified evaluator. The employer has its qualified evaluator assess the individual and determine that the individual meets the qualification requirements listed in subsection (3) of this section and provides documentation of that determination. An assessment by an employer's qualified evaluator under this option is not portable meaning other employers are not permitted to use this qualification to meet the requirements of this section.

(c) The employer must make the documentation for whichever option is used available at the site while the rigger is employed by the employer. The documentation must specify each type of rigging for which the rigger meets the requirements of subsection (3) of this section.

(2) If subsequent actions by the rigger indicate that the individual may not meet the qualification requirements listed in subsection (3) of this section, the employer must not allow the individual to continue working as a rigger until retraining is provided and a reassessment is made in accordance with subsection (1) of this section that confirms that the individual meets the qualification requirements.

(3) Qualification requirements. Each rigger must:

(a) Know and understand the requirements located in ASME B30.7-2006, Base-Mounted Drum Hoists, B30.9-2010, Slings, B30.10-2009, Hooks, B30.16-2007, Overhead Hoists (Underhung), B30.20-2010, Below-the-Hook Lifting Devices, B30.21-2005, Manually Lever Operated Hoists and B30.26-2004, Rigging Hardware, as applicable.

(b) Know and understand the type of sling and hitch used. For example, if synthetic web slings are used, the rigger must know and understand the removal criteria for this type of sling and how to properly use the sling.

(c) Be competent in the application of the type of hitches used.

(d) Have a basic understanding of slings, rigging hardware and below-the-hook lifting devices (as applicable); their limitations, rigging practices, associated hazards and inspection requirements.

(e) Know and understand load weight estimation, center of gravity, effect of angles on rigging components, load turning, knots/tag lines, chain hoist/come-a-long usage, winch and block usage, and basic hand signals, as applicable.

(f) Know and understand the relevant requirements of WAC 296-155-556 through 296-155-56220 and this section.

(g) Demonstrate that they meet the requirements in (a) through (e) of this subsection through a written test and through a practical test. All tests must be documented.

Notes:
- The provisions of subsection (3)(g) of this section are not required until February 1, 2013.
- This section does not require that each and every worker associated with the rigging of a component or structure to be a "fully qualified rigger" as defined in this section, the requirement is for at least one of the workers to be a fully qualified rigger. However, all other associated workers must be qualified by training or experience to perform their assigned tasks (WAC 296-155-035(2)).

(4) Qualification period. A rigger qualification cannot exceed a five-year period; this qualification must be renewed every five years to ensure riggers maintain qualified status. At a minimum, this renewal must include a documented written exam.

[Statutory Authority: RCW 49.17.010, 49.17.040, 49.17.050, 49.17.060 and chapter 49.17 RCW, and 29 C.F.R. 1926, Subpart CC. WSR 13-02-068, § 296-155-53306, filed 12/31/12, effective 2/1/13. Statutory Authority: RCW 49.17.010, 49.17.040, 49.17.050, 49.17.440, 49.17.060, and 29 C.F.R. 1926, Subpart CC. WSR 12-01-086, § 296-155-53306, filed 12/20/11, effective 2/1/12.]

WAC 296-155-534 General requirements for all cranes and derricks.

[Statutory Authority: RCW 49.17.010, 49.17.040, 49.17.050, 49.17.440, 49.17.060, and 29 C.F.R. 1926, Subpart CC. WSR 12-01-086, § 296-155-534, filed 12/20/11, effective 2/1/12.]

WAC 296-155-53400 General requirements. (1) All cranes and derricks covered under this part, except for those exempted in WAC 296-155-52900(3), must be certified annually by an accredited certifier recognized by the department, for detailed information about this certification see WAC 296-155-532.

(2) All crane and derrick operators covered under this part, except for those exempted in WAC 296-155-52900(3), must be qualified as required by WAC 296-155-533.

(3)(a) Cranes must meet the requirements for design, construction, installation and testing as prescribed in the applicable ASME standard at the time the crane or derrick was manufactured.

(b) Where manufacturer's specifications are not available the limitations assigned to the crane must be based on the determinations of a registered professional engineer (RPE), competent in this field and such determinations must be appropriately documented and recorded.

(c) Attachments used with cranes must not exceed the capacity, rating, or scope recommended by the manufacturer or RPE.

(4) Unavailable operation procedures.

(a) Where the manufacturer procedures are unavailable, the employer must develop and ensure compliance with all procedures necessary for the safe operation of the crane/derrick and attachments.

(b) Procedures for the operational controls must be developed by a qualified person.

(c) Procedures related to the capacity of the crane/derrick must be developed and signed by a registered professional engineer familiar with this equipment.

(5) Warning decals and placards must be installed and legible as prescribed by this part and the crane manufacturer.

(6) The procedures applicable to the operation of the crane/derrick including a legible and applicable operator's manual and load rating chart, written in the English language with customary grammar and punctuation, must be in the operator's cab or station when the crane is in operation. Where rated capacities are available in the cab only in electronic form: In the event of a failure which makes the rated capacities inaccessible, the operator must immediately cease operations or follow safe shut-down procedures until the rated capacities (in electronic or other form) are available.

(7) Rated capacity and related information. The information available in the operator's cab or station (see WAC 296-155-53400(6)) regarding "rated capacity" and related information must include, at a minimum, the following information:

(a) A complete range of the manufacturer's rated capacities, as follows:

(i) At all manufacturer approved operating radii, boom angles, work areas, boom lengths and configurations, jib lengths and angles (or offset).

(ii) Alternate ratings for use and nonuse of optional equipment which affects rated capacities, such as outriggers, stabilizers, and extra counterweights.

(iii) When available from the manufacturer load ratings where structural competence governs lifting performance must be identified.

(b) A work area chart for which capacities are listed in the load chart.

Note: An example of this type of chart for mobile cranes is in WAC 296-155-56435.

(c) The work area figure and load chart must clearly indicate the areas where no load is to be handled.

(d) Recommended reeving for the hoist lines must be shown.

(e) Recommended parts of hoist reeving, size, and type of wire rope for various crane loads.

(f) Recommended boom hoist reeving diagram, where applicable; size, type, and length of wire rope.

(g) Tire pressure (where applicable).

(h) Caution or warnings relative to limitations on cranes and operating procedures, including an indication of the least stable direction.

(i) Position of the gantry and requirements for intermediate boom suspension (where applicable).

(j) Instructions for boom erection and conditions under which the boom, or boom and jib combinations, may be raised or lowered.

(k) Whether the hoist holding mechanism is automatically or manually controlled, whether free fall is available, or any combination of these.

(l) The maximum telescopic travel length of each boom telescopic section.

(m) Whether sections are telescoped manually or with power.

(n) The sequence and procedure for extending and retracting the telescopic boom section.

(o) Maximum loads permitted during the boom extending operation, and any limiting conditions or cautions.

(p) Hydraulic relief valve settings specified by the manufacturer.

(8) All manufacturer procedures applicable to the operational functions of cranes/derricks, including its use with attachments must be complied with.

(9) The operator must not engage in any practice or activity that diverts his/her attention while actually engaged in operating the crane/derrick, such as the use of cellular phones (other than when used for signal communications).

(10) A portable fire extinguisher, with a basic minimum extinguisher rating of 10 BC, must be installed in the cab or at the machinery housing. Additional requirements relating to portable fire extinguishers can be found in WAC 296-800-300.

(11) Cabs. Cranes/derricks with cabs must meet the following requirements:

(a) Cabs must be designed with a form of adjustable ventilation and method for clearing the windshield for maintaining visibility and air circulation. Examples of means for adjustable ventilation include air conditioner or window that can be opened (for ventilation and air circulation); examples of means for maintaining visibility include heater (for preventing windshield icing), defroster, fan, windshield wiper.

(b) Cab doors (swinging, sliding) must be designed to prevent inadvertent opening or closing while traveling or operating the machine. Swinging doors adjacent to the operator must open outward. Sliding operator doors must open rearward.

(c) Windows.

(i) The cab must have windows in front and on both sides of the operator. Forward vertical visibility must be sufficient to give the operator a view of the boom point at all times.

(ii) Windows may have sections designed to be opened or readily removed. Windows with sections designed to be opened must be designed so that they can be secured to prevent inadvertent closure.

(iii) Windows must be of safety glass or material with similar optical and safety properties that introduce no visible distortion or otherwise obscure visibility that interferes with the safe operation of the equipment.

(d) A clear passageway must be provided from the operator's station to an exit door on the operator's side.

(e) Areas of the cab roof that serve as a workstation for rigging, maintenance, or other equipment-related tasks must be capable of supporting two hundred fifty pounds without permanent distortion.

(12) Personal belongings must be stored in such a manner as to not interfere with access or operation of the crane.

(13) Rigging gear, tools, oil cans, waste, and other articles must be stored in the toolbox or another appropriate location, and must not be permitted to lie loose in or about the cab or operator's work station.

(14) Operating controls must be properly marked to indicate the function of the controls in each position.

(15) The employer must designate a competent person who must inspect the cranes and components daily when used, and periodically during use to make sure it is in safe operating condition. Any deficiencies that effect the safe operation of the crane must be repaired, or defective parts replaced, before continued use.

Note: For additional requirements relating to inspections see WAC 296-155-53405.

(16) Before starting the engine, the operator must verify that all controls are in the proper starting position and that all personnel are in the clear.

(17) While in operation, belts, gears, shafts, pulleys, sprockets, spindles, drums, fly wheels, chains, or other reciprocating, rotating, or other moving parts or equipment must be guarded if such parts are exposed to contact by employees, or otherwise create a hazard. Guarding must meet the requirements of chapter 296-806 WAC, Machine safety.

(18) Neither the load nor the boom is allowed to be lowered below the point where less than two full wraps of rope remain on their respective drums.

(19) All exhaust pipes, turbochargers, and charge air coolers must be guarded or insulated in areas where contact by employees is possible in the performance of normal duties and are discharged in a direction away from the operator.

(20) Hydraulic and pneumatic lines must be protected from damage to the extent feasible.

(21) Friction mechanisms. Where friction mechanisms (such as brakes and clutches) are used to control the boom hoist or load line hoist, they must be:

(a) Of a size and thermal capacity sufficient to control all rated loads with the minimum recommended reeving.

(b) Adjustable to permit compensation for lining wear to maintain proper operation.

(22) Hydraulic load hoists. Hydraulic drums must have an integrally mounted holding device or internal static brake to prevent load hoist movement in the event of hydraulic failure.

(23) Whenever internal combustion engine powered crane/derrick exhausts in enclosed spaces, tests must be made and recorded to see that employees are not exposed to unsafe concentrations of toxic gases or oxygen deficient atmospheres. (See chapter 296-62 WAC, General occupational health standards and chapter 296-841 WAC, Airborne contaminants.)

(24) If access to the cab roof is necessary, a ladder or steps must be provided to give access to a cab roof.

(25) All steps, running boards, and ladders must be of substantial construction and in good repair at all times.

(26) Guardrails, handholds, and steps must be provided on cranes for easy access to the cab in accordance with Parts C-1 and J of this chapter.

(27) Platforms and walkways must have antiskid surfaces.

(28) Cranes/derricks fuel tank filler pipe must be located in such a position, or protected in such a manner, as to not allow spill or overflow to run onto the engine, exhaust, or electrical equipment of any crane being fueled. In addition, cranes/derricks must be refueled as follows:

(a) Make sure the engine is turned off before refueling.

(b) When refueling with gasoline using portable containers, make sure only an approved safety-type can with an automatic closing cap and flame arrester is used.

(c) Smoking or open flames is prohibited in the refueling area.

(29) Crane hook ball assemblies and load blocks.

(a) Load hooks (including latched and unlatched types), ball assemblies, and load blocks must be of sufficient weight to overhaul the line from the highest hook position for boom or boom and jib lengths and the number of parts of the line in use.

(b) Crane hooks must be equipped with latches or self-locking devices unless a qualified person determines that it is safer to hoist and place the load without latches (or with the latches removed/tied back or otherwise disabled) and routes for the loads are preplanned to ensure that no employee is required to work in the fall zone except for employees necessary for the hooking or unhooking of the load.

(c) The latch or self-locking device (when used) must bridge the throat opening of the hook for the purpose of retaining slings or other lifting devices under slack conditions.

(30) Repair or replace a hook when it shows:

(a) Any cracks, nicks, or gouges.

(b) Wear of more than ten percent of the original sectional dimension, or as recommended by the manufacturer.

(c) Any visibly apparent bend or twist from the plane of the unbent hook.

(d) Any distortion causing an increase in the throat opening of five percent, not to exceed one-fourth inch or as recommended by the manufacturer.

(e) Repair or replace hook latches or self-locking devices when they become inoperative.

(31) A qualified person must determine if a damaged hook needs to be replaced or can be repaired.

(32) When repairing a hook, the requirements below must be followed:

(a) Unless otherwise recommended by the manufacturer, only a qualified person can repair cracks, nicks and gouges by grinding longitudinally, following the contour of the hook.

Note: The dimension of the hook cannot be reduced more than ten percent of its original value, unless otherwise recommended by the manufacturer.

(b) All other repairs must be performed by the hook manufacturer or the qualified person.

(c) Weld repairs or reshaping must not be performed on hooks, unless approved by the manufacturer.

(33) Replacement parts, such as load pins for clevis hooks must be at least equal to the original manufacturer's specifications.

Note: For requirements relating to wedge sockets, see WAC 296-155-56115(2).

(34) Before traveling a crane with a load, it must be determined that this practice is not prohibited by the manufacturer. If not, a qualified person must be responsible for the operation. Decisions such as the necessity to reduce crane ratings, load position, boom location, ground support, travel route, and speed of movement must be in accordance with that person's determination. Specified tire pressure must be maintained. The boom should be carried in line with the direction of travel. Sudden starts and stops should be avoided.

(35) The crane/derrick must not be assembled or used unless ground conditions are firm, drained, and graded to a sufficient extent as determined by a competent person, so that, in conjunction (if necessary) with the use of supporting materials, the crane/derrick manufacturer's specifications for adequate support and degree of level of the crane/derrick are met. The requirement for the ground to be drained does not apply to marshes/wetlands. For additional requirements for self-erecting tower cranes, see WAC 296-155-54100.

(36) The controlling entity must:

(a) Ensure that ground preparations necessary to meet the requirements in subsection (35) of this section are provided.

(b) Inform the user of the crane/derrick and the operator of the location of hazards beneath the crane/derrick set-up area (such as voids, tanks, utilities) if those hazards are identified in documents (such as site drawings, as-built drawings, and soil analyses) if they are available to the controlling entity that are in the possession of the controlling entity

(whether at the site or off-site) or the hazards are otherwise known to that controlling entity.

(37) If there is no controlling entity for the project, the requirement in subsection (36)(a) of this section must be met by the employer that has authority at the site to make or arrange for ground preparations needed to meet subsection (35) of this section.

(38) If the assembly/disassembly director or the operator determines that ground conditions do not meet the requirements in subsection (35) of this section, that person's employer must have a discussion with the controlling entity regarding the ground preparations that are needed so that, with the use of suitable supporting materials/devices (if necessary), the requirements in subsection (35) of this section can be met.

(39) This section does not apply to cranes designed for use on railroad tracks when used on railroad tracks that are part of the general railroad system of transportation that is regulated pursuant to the Federal Railroad Administration under 49 C.F.R. Part 213, and that comply with applicable Federal Railroad Administration requirements.

(40) Multiple crane/derrick coordination. Where any part of a crane/derrick is within the working radius of another crane/derrick, the controlling entity must institute a system to coordinate operations. If there is no controlling entity, the employer (if there is only one employer operating the multiple pieces of equipment), or employers, must institute such a system.

(41) Multiple crane or multiple load line lifts.

(a) Plan development. Before beginning a crane/derrick operation in which more than one crane/derrick will be supporting the load or multiple load lines on one crane will be supporting the load, the operation must be planned. The planning must meet the following requirements:

(i) The plan must be developed by a qualified person.

(ii) The plan must be designed to ensure that the requirements of this part are met.

(iii) Where the qualified person determines that engineering expertise is needed for the planning, the employer must ensure that it is provided.

(b) Plan implementation.

(i) The multiple-crane/derrick lift or multiple load line lifts must be directed by a person who meets the criteria for both a competent person and a qualified person, or by a competent person who is assisted by one or more qualified persons (lift director).

(ii) The lift director must review the plan in a meeting with all workers who will be involved with the operation.

(42) Work area control. Swing radius hazards.

(a) The requirements in (b) of this subsection apply where there are accessible areas in which the crane's rotating superstructure (whether permanently or temporarily mounted) poses a reasonably foreseeable risk of:

(i) Striking and injuring an employee; or

(ii) Pinching/crushing an employee against another part of the crane or another object.

(b) To prevent employees from entering these hazard areas, the employer must:

(i) Train each employee assigned to work on or near the crane (authorized personnel) in how to recognize struck-by and pinch/crush hazard areas posed by the rotating superstructure.

(ii) Erect and maintain control lines, warning lines, railings or similar barriers to mark the boundaries of the hazard areas.

Exception: When the employer can demonstrate that it is neither feasible to erect such barriers on the ground nor on the crane, the hazard areas must be clearly marked by a combination of warning signs (such as Danger-Swing/Crush Zone) and high visibility markings on the crane that identify the hazard areas. In addition, the employer must train each employee to understand what these markings signify.

(c) Protecting employees in the hazard area.

(i) Before an employee goes to a location in the hazard area that is out of view of the operator, the employee (or someone instructed by the employee) must ensure that the operator is informed that he/she is going to that location.

(ii) Where the operator knows that an employee went to a location covered by subsection (43)(c)(i) of this section, the operator must not rotate the superstructure until the operator is informed in accordance with a prearranged system of communication that the employee is in a safe position.

(d) Where any part of a crane/derrick is within the working radius of another crane/derrick, the controlling entity must institute a system to coordinate operations. If there is no controlling entity, the employer (if there is only one employer operating the multiple pieces of equipment), or employers, must institute such a system.

(43) Keeping clear of the load.

(a) Where available, hoisting routes that minimize the exposure of employees to hoisted loads must be used to the extent consistent with public safety.

(b) While the operator is not moving a suspended load, no employee is allowed to be within the fall zone, except for employees:

(i) Engaged in hooking, unhooking or guiding a load; or

(ii) Engaged in the initial attachment of the load to a component structure; or

(iii) Operating a concrete hopper or concrete bucket.

(c) When employees are engaged in hooking, unhooking, or guiding the load, or in the initial connection of a load to a component or structure, and are within the fall zone, all of the following criteria must be met:

(i) The materials being hoisted must be rigged to prevent unintentional displacement.

(ii) Hooks with self-closing latches or their equivalent must be used, see subsection (29)(b) of this section. "J" hooks are permitted to be used for setting wooden trusses.

(iii) The materials must be rigged by a qualified rigger.

(d) Receiving a load. Only employees needed to receive a load are permitted to be within the fall zone when a load is being landed.

(e) During a tilt-up or tilt-down operation:

(i) Employees are not allowed to be directly under the load.

(ii) Only employees' essential to the operation are allowed to be in the fall zone (but not directly under the suspended load).

Note: An employee is essential to the operation if the employee is conducting one of the following operations and the employer can demonstrate it is infeasible for the employee to perform that operation from outside the fall zone:

- Physically guide the load;
- Closely monitor and give instructions regarding the load's movement; or
- Either detach it from or initially attach it to another component or structure (such as, but not limited to, making an initial connection or installing bracing).

(f) Boom free fall is prohibited when an employee is in the fall zone of the boom or load, and load line free fall is prohibited when an employee is directly under the load. See subsections (44) through (47) of this section.

(44) Boom free fall prohibitions.

(a) The use of cranes in which the boom is designed to free fall (live boom) is prohibited in each of the following circumstances:

(i) An employee is in the fall zone of the boom or load.

(ii) An employee is being hoisted.

(iii) The load or boom is directly over a power line, or over any part of the area listed in Table 4 located in WAC 296-155-53408, clearance distance to each side of the power line; or any part of the area extending the Table 4 clearance distance to each side of the power line is within the radius of vertical travel of the boom or the load.

(iv) The load is over a shaft, except where there are no employees in the shaft.

(v) The load is over a cofferdam, except where there are no employees in the fall zone of the boom or the load.

(vi) Lifting operations are taking place in a refinery or tank farm.

(b) The use of cranes in which the boom is designed to free fall (live boom) is permitted only where none of the circumstances listed in (a) of this subsection are present and:

(i) The crane was manufactured prior to October 31, 1984; or

(ii) The crane is a floating crane or a land crane on a vessel/flotation device.

(45) Preventing boom free fall. Where the use of a crane with a boom that is designed to free fall (live boom) is prohibited (see subsection (44)(a) of this section), the boom hoist must have a secondary mechanism or device designed to prevent the boom from falling in the event the primary system used to hold or regulate the boom hoist fails, as follows:

(a) Friction drums must have:

(i) A friction clutch and, in addition, a braking device, to allow for controlled boom lowering.

(ii) A secondary braking or locking device, which is manually or automatically engaged, to back-up the primary brake while the boom is held (such as a secondary friction brake or a ratchet and pawl device).

(b) Hydraulic drums must have an integrally mounted holding device or internal static brake to prevent boom hoist movement in the event of hydraulic failure.

(c) Neither clutches nor hydraulic motors must be considered brake or locking devices for purposes of this part.

(d) Hydraulic boom cylinders must have an integrally mounted holding device.

(46) Preventing uncontrolled retraction. Hydraulic telescoping booms must have an integrally mounted holding device to prevent the boom from retracting in the event of hydraulic failure.

(47) Load line free fall. In each of the following circumstances, controlled load lowering is required and free fall of the load line hoist is prohibited:

(a) An employee is directly under the load.

(b) An employee is being hoisted.

(c) The load is directly over a power line, or over any part of the area listed in Table 4, located in WAC 296-155-53408, clearance distance to each side of the power line; or any part of the area extending the Table 4 of WAC 296-155-53408, clearance distance to each side of the power line is within the radius of vertical travel of the load.

(d) The load is over a shaft.

(e) The load is over a cofferdam, except where there are no employees in the fall zone of the load.

(48) Employees must not be allowed to ride on the hook or load.

(49) The hoist rope must not be wrapped around the load.

(50) All loads must be attached to the hook by means of suitable slings or other devices of sufficient lifting capacity.

(51) When moving a load it must be well secured and balanced in the sling or lifting device before it is lifted more than a few inches.

(52) Leaving the crane/derrick unattended. The operator must not leave the controls while the load is suspended, except where all of the following are met:

(a) The operator remains adjacent to the crane/derrick and is not engaged in any other duties.

(b) The load is to be held suspended for a period of time exceeding normal lifting operations.

(c) The competent person determines that it is safe to do so and implements measures necessary to restrain the boom hoist and telescoping, load, swing, and outrigger or stabilizer functions.

(d) Barricades or caution lines, and notices, are erected to prevent all employees from entering the fall zone. No employees, including those listed in subsection (43)(b), (d), and (e) of this section, are permitted in the fall zone.

Exemption: The provisions in this section do not apply to working gear (such as slings, spreader bars, ladders, and welding machines) where the weight of the working gear is negligible relative to the lifting capacity of the equipment as positioned, and the working gear is suspended over an area other than an entrance or exit.

Note: For additional requirements relating to leaving the crane unattended for tower, self-erecting, overhead/bridge and derricks see:

- WAC 296-155-53915, Tower cranes—Operations;
- WAC 296-155-54115, Self-erecting tower cranes—Operations;
- WAC 296-155-54215, Overhead/bridge cranes and gantry cranes—Operations;
- WAC 296-155-54320, Derricks—Operations.

(53) While moving the load the lift and swing path must be clear of obstructions.

(54) Before starting to lift the following conditions must be met:

(a) The hoist rope must not be kinked.

(b) Multiple-part lines must not be twisted around each other.

(c) The hook must be brought over the load in such a manner as to minimize swinging.

(d) If the competent person determines that there is slack rope condition requiring respooling of the rope, it must be verified (before starting the lift) that the rope is seated on the drum and in the sheaves as the slack is removed.

(e) The competent person must adjust the crane/derrick and/or operations to address the effect of wind, ice, and snow on equipment stability and rated capacity.

(f) If possible, the load must be free to be lifted; it is neither caught nor attached to other objects.

(55) During lifting operations, care must be taken that there is no sudden acceleration or deceleration of the moving load and that the load boom or other parts of the crane do not contact any obstruction. Rotational speed of the crane/derrick must be such that the load does not swing out beyond the radius at which it can be controlled.

(56) Side loading of booms (jibs) must be limited to freely suspended loads. Cranes must not be used for dragging loads sideways.

(57) The operator must test the brakes each time a load that is ninety percent or more of the maximum line pull is handled by lifting the load a few inches and applying the brakes. In duty cycle and repetitive lifts where each lift is ninety percent or more of the maximum line pull, this requirement applies to the first lift but not to successive lifts.

(58) Modifications or additions which affect the capacity or safe operation of the crane/derrick are prohibited except where the requirements of (a) or (b) of this subsection are met. For recertification requirements see WAC 296-155-53214 (1)(c).

(a) Manufacturer review and approval.

(i) The manufacturer approves the modifications/additions in writing.

(ii) The load charts, procedures, instruction manuals and instruction plates/tags/decals are modified as necessary to accord with the modification/addition.

(iii) The original safety factor of the crane/derrick is not reduced.

(b) Where manufacturer is unavailable or has refused to review a request. The manufacturer is provided a detailed description of the proposed modification/addition, is asked to approve the modification/addition, but it declines to review the technical merits of the proposal or fails, within thirty days, to acknowledge the request or initiate the review, and all of the following are met:

(i) A registered professional engineer who is a qualified person with respect to the crane/derrick involved:

(A) Approves the modification/addition and specifies the crane/derrick configurations to which that approval applies; and

(B) Modifies load charts, procedures, instruction manuals and instruction plates/tags/decals as necessary to accord with the modification/addition.

(ii) The original safety factor of the crane/derrick is not reduced.

(c) Manufacturer does not complete the review within one hundred twenty days of the request. The manufacturer is provided a detailed description of the proposed modification/addition, is asked to approve the modification/addition, agrees to review the technical merits of the proposal, but fails to complete the review of the proposal within one hundred twenty days of the date it was provided the detailed description of the proposed modification/addition, and the requirements of subsection (58)(b)(i) and (ii) of this section are met.

(d) Multiple manufacturers of equipment designed for use on marine worksites. The equipment is designed for marine worksites, contains major structural components from more than one manufacturer, and the requirements of subsection (58)(b)(i) and (ii) of this section are met.

(59) No modifications or additions which affect the capacity or safe operation of the crane can be made by the employer without the manufacturers' written approval. If components of more than one crane manufacturer are being combined, the employer must obtain written approval from all manufacturers prior to use. If the manufacturer(s) is/are not available a registered professional structural engineer's (RPSE) written approval must be obtained. If such modifications or changes are made, the capacity, operation, and maintenance instruction plates, tags, or decals, must be changed accordingly. In no case must the original safety factor of the crane be reduced.

Note: The provisions in subsections (58) and (59) of this section do not apply to modifications made or approved by the U.S. military.

(60) All applicable controls must be tested by the operator at the start of a new shift, if possible. If any controls fail to operate properly, they must be adjusted or repaired before operations are initiated.

(61) Except for proof load testing required under WAC 296-155-53202 through 296-155-53212, no crane/derrick is permitted to be loaded beyond the specifications of the load rating chart, unless authorized by the crane manufacturer. The operator must not be required to operate the crane/derrick in a manner that would violate this requirement.

(62) Load weight. The operator must verify that the load is within the rated capacity of the crane/derrick by at least one of the following methods:

(a) The weight of the load must be determined from a reliable source recognized by the industry (such as the load's manufacturer), or by a reliable calculation method recognized by the industry (such as calculating a steel beam from measured dimensions and a known per foot weight), or by other equally reliable means. In addition, when requested by the operator, this information must be provided to the operator prior to the lift; or

(b) The operator must begin hoisting the load to determine, using a load weighing device, load moment indicator, rated capacity indicator, or rated capacity limiter. If the load exceeds seventy-five percent of the maximum rated capacity at the longest radius that will be used during the lift operation, the operator must not proceed with the lift until it is verified that the weight of the load is in accordance with (a) of this subsection.

(63) Tag lines or restraint lines must be used when rotation or swinging of the load is hazardous or if the load needs guidance. Tag lines are not required when all of the following criteria are met:

• The suspended load can be expected to remain still when in a static (nonmoving) condition or does not swing or rotate in a hazardous manner;

• The movement of the crane or boom cannot be expected to cause the load to swing or rotate in an uncontrolled manner that may create a hazard;

• The operator is in control of the movement of the load and a hazardous condition is not created.

(64) All brakes must be adjusted in accordance with manufacturer procedures to prevent unintended movement.

(65) Safety devices and/or operational aids must not be used as a substitute for the exercise of professional judgment by the operator.

(66) Storm warning. When a local storm warning has been issued, the competent person must determine whether it is necessary to implement manufacturer recommendations for securing the crane/derrick.

(67) Whenever there is a concern as to safety, the operator has the authority to stop and refuse to handle loads until a qualified person has determined that safety has been assured.

(68) Tag-out.

(a) Tagging out of service. Where the employer has taken the crane/derrick out of service, a tag must be placed in the cab or at the operator station stating that the equipment is out of service and is not to be used. Where the employer has taken a function(s) out of service, a tag must be placed in a conspicuous position stating that the function is out of service and is not to be used.

(b) Response to do not operate/tag-out signs.

(i) If there is a warning (tag-out or maintenance/do not operate) sign on the crane/derrick or starting control, the operator must not activate the switch or start the crane/derrick until the sign has been removed by a person authorized to remove it, or until the operator has verified that:

(A) No one is servicing, working on or otherwise in a dangerous position around the machine.

(B) The crane/derrick has been repaired and is working properly.

(ii) If there is a warning (tag-out or maintenance/do not operate) sign on any other switch or control, the operator must not activate that switch or control until the sign has been removed by a person authorized to remove it, or until the operator has verified that the requirements in (b)(i)(A) and (B) of this subsection have been met.

Note: For additional lockout/tagout procedures for electrical circuits, see WAC 296-155-429.

(69) If crane/derrick adjustments or repairs are necessary:

(a) The operator must, in writing, promptly inform the person designated by the employer to receive such information and, where there are successive shifts, to the next operator; and

(b) The employer must notify all affected employees, at the beginning of each shift, of the necessary adjustments or repairs and all alternative measures.

(70) All cranes and derricks mounted on barges or other floating structures must meet the requirements as outlined in ASME B30.8-2004 for construction, installation, inspection, maintenance and operation.

(71) Swinging locomotive cranes. A locomotive crane must not be swung into a position where railway cars on an adjacent track could strike it, until it is determined that cars are not being moved on the adjacent track and that proper flag protection has been established.

(72) Remote control cranes/derricks. Before an operator leaves the crane/derrick to operate remotely, the operator must ensure that the crane/derrick will be used in accordance with the manufacturer's recommendations. Provisions must be made to prevent simultaneous activation of controls when more than one control station (remote control) is provided.

(73) Remote-operated cranes/derricks must function so that if the control signal for any crane/derrick motion becomes ineffective, the crane/derrick motion must stop.

(74) Remote-operated cranes/derricks must be equipped with an "emergency stop" system, located at the operator's remote station to provide the means to remove power from the crane in the event of a malfunction.

(75) A preventative maintenance program must be established based on the recommendation of the crane/derrick manufacturer. If manufacturer's recommendations are not available, then those of a qualified person must be followed. Dated records must be kept available.

(76) Working with a diver. The employer must meet the following additional requirements when working with a diver in the water:

(a) If a crane/derrick is used to get a diver into and out of the water, it must not be used for any other purpose until the diver is removed from the water. When used for more than one diver, it must not be used for any other purpose until all divers are all out of the water.

(b) The operator must remain at the controls of the crane/derrick at all times.

(c) In addition to the requirements in WAC 296-155-53406, Signals, either:

(i) A clear line of sight must be maintained between the operator and dive tender; or

(ii) The signals between the operator and dive tender must be transmitted electronically.

[Statutory Authority: RCW 49.17.010, 49.17.040, 49.17.050, 49.17.060 and chapter 49.17 RCW, and 29 C.F.R. 1926, Subpart CC. WSR 13-02-068, § 296-155-53400, filed 12/31/12, effective 2/1/13. Statutory Authority: RCW 49.17.010, 49.17.040, 49.17.050, 49.17.440, 49.17.060, and 29 C.F.R. 1926, Subpart CC. WSR 12-01-086, § 296-155-53400, filed 12/20/11, effective 2/1/12.]

WAC 296-155-53401 Duties of assigned personnel. (1) While the organizational structure of various construction activities may differ, the following duties are described here for purposes of assignment. All assignments listed below must be assigned in the worksite organization. (A single individual may perform one or more of these assignments concurrently.)

• Crane owner: Has custodial control of a crane by virtue of lease or ownership.

• Crane user: Arranges the crane's presence on a worksite and controls its use there.

• Site supervisor: Exercises supervisory control over the worksite on which a crane is being used and over the work that is being performed on that site.

• Lift director: Directly oversees the work being performed by a crane and the associated rigging crew.

• Crane operator: Directly controls the crane's functions.

(2) Duties of the crane owner and crane user. In some situations the owner and the user may be the same entity and therefore would have the same duties assigned. In other cases, the user may lease or rent a crane from the owner without supervisory, operational, maintenance, support personnel, or services from the owner. In these situations, subsection (3)(c) and (d) of this section apply.

(3) The crane owner's duties would include the following:

(a) Providing a crane that meets the requirements of Part L of this chapter as well as specific job requirements defined by the user.

(b) Providing a crane and all necessary components, specified by the manufacturer, that meets the user's requested configuration and capacity.

(c) Providing all applicable load/capacity chart(s) and diagrams.

(d) Providing additional technical information pertaining to the crane, necessary for crane operation, when requested by the crane user.

(e) Providing field assembly, disassembly, operation, maintenance information, and warning decals and placards installed as prescribed by the crane manufacturer.

(f) Ensuring that inspection, testing, and maintenance is performed in accordance with Part L of this chapter and informing the crane user of these requirements.

(g) Using personnel that meet the requirements for a competent and/or qualified person as defined in WAC 296-155-52902 for the purposes of inspections, maintenance, repair, transport, assembly, and disassembly.

(4) The crane user's duties would include the following:

(a) Complying with the requirements of Part L of this chapter, manufacturer's requirements, and those regulations applicable at the worksite.

(b) Using supervisors for crane activities that meet the requirements for a qualified person as defined in WAC 296-155-52902.

(c) Ensuring that the crane is in proper operating condition prior to initial use at the worksite by:

(i) Verifying that the crane owner has provided documentation that the crane meets the requirements of Part L of this chapter.

(ii) Verifying that inspections have been performed as prescribed in WAC 296-155-53405.

(d) Verifying that the crane has the necessary lifting capacity to perform the proposed lifting operations in the planned configuration.

(e) Using crane operators that meet the requirements of WAC 296-155-53300 and are qualified to perform the tasks that will be required with the crane to which they are assigned to operate.

(f) Ensuring the assigned operator(s) has been notified of adjustments or repairs that have not been completed, prior to commencing crane operations.

(g) Using personnel that meet the requirements for a competent and/or qualified person as defined in WAC 296-155-52902 for the purposes of inspections, maintenance, repair, transport, assembly, and disassembly.

(h) Ensuring that all personnel involved in maintenance, repair, transport, assembly, disassembly, and inspection are aware of their assigned duties, and the associated hazards.

(i) Ensuring that the inspection, testing, and maintenance as required by this part are followed and any other related requirements specified by the crane owner.

(5) The site supervisor's duties would include the following:

(a) Ensuring that the crane meets the requirements of Part L of this chapter prior to initial site usage.

(b) Determining if additional regulations are applicable to crane operations.

(c) Ensuring that a qualified person is designated as the lift director.

(d) Ensuring that crane operations are coordinated with other job site activities that will be affected by or will affect lift operations.

(e) Ensuring that the area for the crane is adequately prepared. The preparation includes, but is not limited to, the following:

(i) Access roads for the crane and associated equipment;

(ii) Sufficient room to assemble and disassemble the crane;

(iii) An operating area that is suitable for the crane with respect to levelness, surface conditions, support capability, proximity to power lines, excavations, slopes, underground utilities, subsurface construction, and obstructions to crane operation;

(iv) Traffic control as necessary to restrict unauthorized access to the crane's working area.

(f) Ensuring that work involving the assembly and disassembly of a crane is supervised by an assembly/disassembly director. See WAC 296-155-53402.

(g) Ensuring that crane operators meet the requirements of WAC 296-155-53300.

(h) Ensuring that conditions which may adversely affect crane operations are addressed. Such conditions include, but are not limited to, the following:

(i) Poor soil conditions;

(ii) Wind velocity or gusting winds;

(iii) Heavy rain;

(iv) Fog;

(v) Extreme cold;

(vi) Artificial lighting.

(i) Allowing crane operation near electric power lines only when the requirements of WAC 296-155-53408 have been met.

(j) Permitting special lifting operations only when equipment and procedures required by this part, the crane manufacturer, or a qualified person, are employed. Such operations include, but are not limited to, the following:

(i) Multiple crane lifts;

(ii) Multiple load line lifts;

(iii) Lifting personnel;

(iv) Pick and carry operations;

(v) Mobile/articulating cranes operating on barges.

(k) Ensuring that work performed by the rigging crew is supervised by a qualified rigger. See WAC 296-155-53406.

(l) Ensuring that crane maintenance is performed by a qualified person. See WAC 296-155-53404.

(6) The lift director's duties would include the following:

(a) Being present at the job site and overseeing the lifting operations;

(b) Stopping crane operations if alerted to an unsafe condition affecting those operations;

(c) Ensuring that the preparation of the area needed to support crane operations has been completed before crane operations commence;

(d) Ensuring necessary traffic controls are in place to restrict unauthorized access to the crane's work area;

(e) Ensuring that personnel involved in crane operations understand their assigned duties, and the associated hazards;

(f) Addressing safety concerns raised by the operator or other personnel and deciding if it is necessary to overrule those concerns and directs crane operations to continue. In all cases, the manufacturer's criteria for safe operation and the requirements of this chapter and any other applicable safety and health standards must be adhered to;

(g) Assigning qualified signal person(s) and conveying that information to the crane operator;

(h) Ensuring that signal persons assigned meet the qualification requirements located in WAC 296-155-53302;

(i) Allowing crane operation near electric power lines only when the requirements of WAC 296-155-53408 and any additional requirements determined by the site supervisor have been met;

(j) Ensuring precautions are implemented when hazards associated with special lifting operations are present. Such operations include, but are not limited to, the following:

(i) Multiple crane lifts;

(ii) Multiple load line lifts;

(iii) Lifting personnel;

(iv) Pick and carry operations;

(v) Mobile/articulating cranes operating on barges.

(k) Ensuring that the applicable requirements of WAC 296-155-547 through 296-155-55405 are met when lifting personnel;

(l) Informing the crane operator of the weight of loads to be lifted, as well as the lifting, moving, and placing locations for these loads;

(m) Obtaining the crane operator's verification that this weight does not exceed the crane's rated capacity;

(n) Ensuring that a crane's load rigging is performed by a qualified rigger as defined in WAC 296-155-53306;

(o) Ensuring that the load is properly rigged and balanced before it is lifted more than a few inches.

(7) Whenever the crane operator has doubt or concerns as to the safety of crane operations, the operator must stop the crane's functions in a controlled manner. Lift operations can only resume after safety concerns have been resolved or the continuation of crane operations is directed by the lift director as outlined in subsection (6) of this section. The crane operator's duties would include the following:

(a) Reviewing the requirements for the crane with the lift director before operations;

(b) Knowing what types of site conditions could adversely affect the operation of the crane and consulting with the lift director concerning the possible presence of those conditions;

(c) Understanding and applying the information contained in the crane manufacturer's operating manual;

(d) Understanding the crane functions and limitations as well as its particular operating characteristics;

(e) Using the crane's load/capacity chart(s) and diagrams and applying all notes and warnings related to the charts to confirm the correct crane configuration to suit the load, site, and lift conditions;

(f) Refusing to operate the crane when any portion of the load or crane would enter the prohibited zone of energized power lines except as defined in WAC 296-155-53408;

(g) Performing a daily inspection as specified in WAC 296-155-53405;

(h) Promptly reporting the need for any adjustments or repairs to the appropriate person;

(i) Following applicable lockout/tagout procedures. See WAC 296-155-53400(67);

(j) Not operating the crane when physically or mentally unfit;

(k) Ensuring that all controls are in the off or neutral position and that all personnel are in the clear before energizing the crane or starting the engine;

(l) Not engaging in any practice that will divert their attention while actually operating the crane controls;

(m) Testing the crane function controls that will be used and operating the crane only if those function controls respond properly;

(n) Operating the crane's functions, under normal operating conditions, in a smooth and controlled manner;

(o) Knowing and following the procedures specified by the manufacturer or approved by a qualified person, for assembly, disassembly, setting up, and reeving the crane;

(p) Knowing how to travel the crane;

(q) Observing each outrigger during extension, setting, and retraction or using another worker to observe each outrigger during extension, setting, or retraction;

(r) Ensuring that the load and rigging weight(s) have been provided;

(s) Calculating or determining the net capacity for all configurations that will be used and verifying, using the load/capacity chart(s), that the crane has sufficient net capacity for the proposed lift;

(t) Considering all factors known that might affect the crane capacity and informing the lift director of the need to make appropriate adjustments;

(u) Knowing the standard and special signals as specified in WAC 296-155-53406 and responding to such signals from the person who is directing the lift or a qualified signal person;

(v) If power fails during operations:

(i) Setting all brakes and locking devices.

(ii) Moving all clutches or other power controls to the off or neutral position.

(iii) Landing any load suspended below the hook under brake control if practical.

(w) Before leaving the crane unattended:

(i) Landing any load suspended below the hook, unless the requirements of WAC 296-155-53400(52) are met.

(ii) Disengaging the master clutch.

(iii) Setting travel, swing, boom brakes, and other locking devices.

(iv) Putting controls in the off or neutral position.

(v) Stopping the engine. An exception to this may exist when crane operation is frequently interrupted during a shift and the operator must leave the crane. Under these circum-

stances, the engine may remain running and (w)(i) and (iv) of this subsection must apply. The operator must be situated where any entry to the crane can be observed.

(vi) Considering the recommendations of the manufacturer for securing the crane, when a local weather storm warning exists.

[Statutory Authority: RCW 49.17.010, 49.17.040, 49.17.050, 49.17.440, 49.17.060, and 29 C.F.R. 1926, Subpart CC. WSR 12-01-086, § 296-155-53401, filed 12/20/11, effective 2/1/12.]

WAC 296-155-53402 Assembly/disassembly. (1) When assembling and disassembling crane/derrick (or attachments), the employer must comply with all applicable manufacturer prohibitions and must comply with either:

(a) Manufacturer procedures applicable to assembly and disassembly; or

(b) Employer procedures for assembly and disassembly. Employer procedures may be used only where the employer can demonstrate that the procedures used meet the requirements in subsection (17) of this section.

Note: The employer must follow manufacturer procedures when an employer uses synthetic slings during assembly or disassembly of cranes/derricks, see subsection (19) of this section.

(2) Supervision - Competent/qualified person.

(a) Assembly/disassembly must be directed by a person who meets the criteria for both a competent person and a qualified person, or by a competent person who is assisted by one or more qualified persons (assembly/disassembly director).

(b) Where the assembly/disassembly is being performed by only one person, that person must meet the criteria for both a competent person and a qualified person. For purposes of this part, that person is considered the assembly/disassembly director.

(3) Knowledge of procedures. The assembly/disassembly director must understand the applicable assembly/disassembly procedures.

(4) Review of procedures. The assembly/disassembly director must review the applicable assembly/disassembly procedures immediately prior to the commencement of assembly/disassembly unless the assembly/disassembly director has applied them to the same type and configuration of crane/derrick (including accessories, if any).

(5) Preassembly inspection.

(a) Prior to assembling crane/derrick components or attachments the assembly/disassembly director must inspect these components and attachments to ensure that they meet the manufacturer's recommendations. This inspection must include a visual inspection to ensure that the components and attachments are of sound physical condition and functional within the manufacturer's recommendations.

(b) Documentation of this inspection must remain at the job site while the crane/derrick is in use.

(6) Crew instructions.

(a) Before commencing assembly/disassembly operations, the assembly/disassembly director must ensure that the crew members understand the following:

(i) Their tasks;

(ii) The hazards associated with their tasks;

(iii) The hazardous positions/locations that they need to avoid.

(b) During assembly/disassembly operations, before a crew member takes on a different task, or when adding new personnel during the operations, the requirements in (a)(i) through (iii) of this subsection must be met.

(7) Protecting assembly/disassembly crew members out of operator view.

(a) Before a crew member goes to a location that is out of view of the operator and is either: In, on, under, or near the crane/derrick (or load) where the crew member could be injured by movement of the crane/derrick (or load), the crew member must inform the operator that they are going to that location.

(b) Where the operator knows that a crew member went to a location covered by (a) of this subsection, the operator must not move any part of the crane/derrick (or load) until the operator is informed in accordance with a prearranged system of communication that the crew member is in a safe position.

(8) Working under the boom, jib or other components.

(a) When pins (or similar devices) are being removed, employees must not be under the boom, jib, or other components, except where the requirements in (b) of this subsection are met.

(b) Exception. Where the employer demonstrates that site constraints require one or more employees to be under the boom, jib, or other components when pins (or similar devices) are being removed, the assembly/disassembly director must implement procedures that minimize the risk of unintended dangerous movement and minimize the duration and extent of exposure under the boom. (See WAC 296-155-56430, Assembly/disassembly—Working under the boom, jib or other components—Sample procedures for minimizing the risk of unintended dangerous boom movement.)

(9) Capacity limits. During all phases of assembly/disassembly, rated capacity limits for loads imposed on the crane/derrick, components (including rigging), lifting lugs and crane/derrick accessories must not be exceeded.

(10) Addressing specific hazards. The assembly/disassembly director supervising the assembly/disassembly operation must address the hazards associated with the operation, which include:

(a) Site and ground bearing conditions. Site and ground conditions must be adequate for safe assembly/disassembly operations and to support the crane/derrick during assembly/disassembly (see WAC 296-155-53400 (34) through (38) for ground condition requirements).

(b) Blocking material. The size, amount, condition and method of stacking blocking must be sufficient to sustain the loads and maintain stability.

(c) Proper location of blocking. When used to support lattice booms or components, blocking must be appropriately placed to:

(i) Protect the structural integrity of the crane/derrick; and

(ii) Prevent dangerous movement and collapse.

(d) Verifying assist crane loads. When using an assist crane, the loads that will be imposed on the assist crane at each phase of assembly/disassembly must be verified in accordance with WAC 296-155-53400(61) before assembly/disassembly begins.

(e) Boom and jib pick points. The point(s) of attachment of rigging to a boom (or boom sections or jib or jib sections)

must be suitable for preventing structural damage and facilitating safe handling of these components.

(f) Center of gravity.

(i) The center of gravity of the load must be identified if it is necessary for the method used for maintaining stability.

(ii) Where there is insufficient information to accurately identify the center of gravity, measures designed to prevent unintended dangerous movement resulting from an inaccurate identification of the center of gravity must be used. (See WAC 296-155-56430, Assembly/disassembly—Working under the boom, jib or other components—Sample procedures for minimizing the risk of unintended dangerous boom movement.)

(g) Stability upon pin removal. The boom sections, boom suspension systems (such as gantry A-frames and jib struts), and components must be rigged or supported to maintain stability upon the removal of the pins.

(h) Snagging. Suspension ropes and pendants must not be allowed to catch on the boom or jib connection pins or cotter pins (including keepers and locking pins).

(i) Struck by counterweights. The potential for unexpected movement from inadequately supported counterweights and from hoisting counterweights.

(j) Boom hoist brake failure. Each time reliance is to be placed on the boom hoist brake to prevent boom movement during assembly/disassembly, the brake must be tested prior to such reliance to determine if it is sufficient to prevent boom movement. If it is not sufficient, a boom hoist pawl, other locking device/back-up braking device, or another method of preventing dangerous movement of the boom (such as blocking or using an assist crane) from a boom hoist brake failure must be used.

(k) Loss of backward stability. Backward stability before swinging the upperworks, travel, and when attaching or removing crane/derrick components.

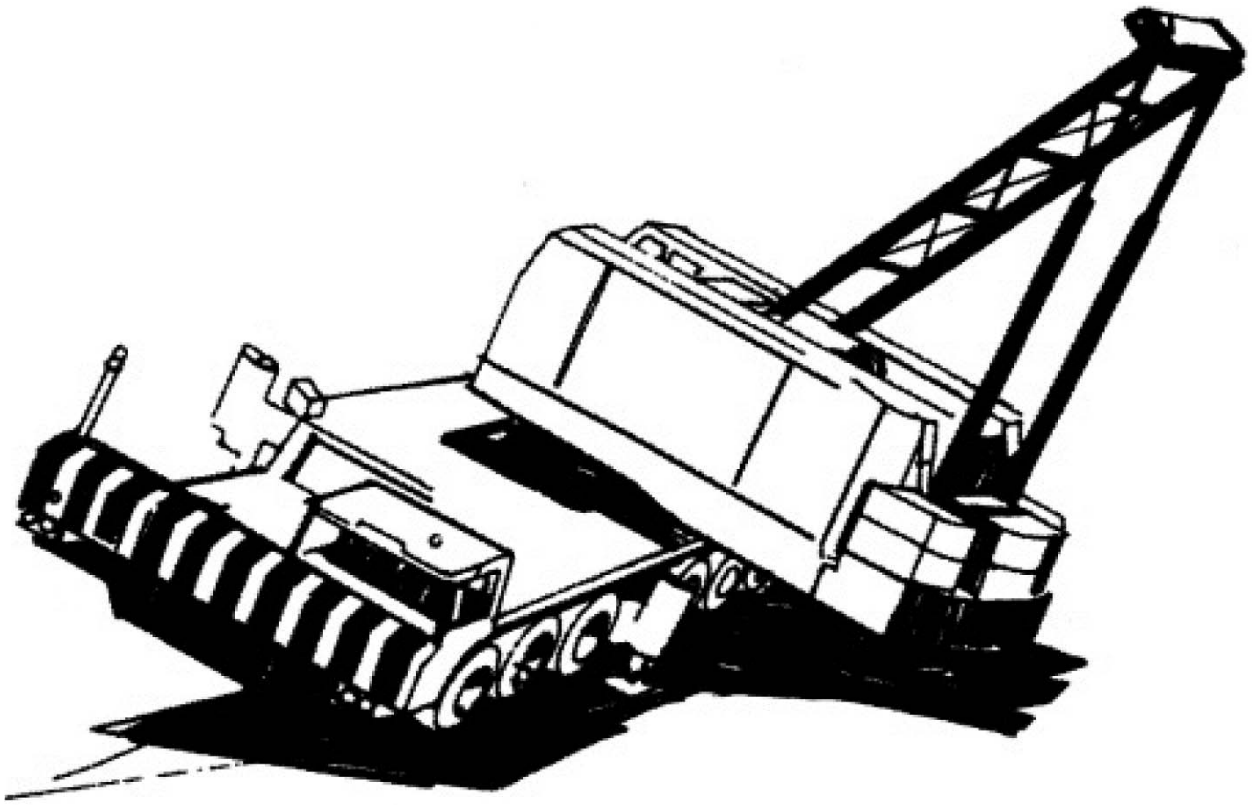

Figure 2. Lack of backward stability results in superstructure toppling.

(l) Wind speed and weather. The effect of wind speed and weather on the crane/derrick.

(11) Cantilevered boom sections. Manufacturer limitations on the maximum amount of boom supported only by cantilevering must not be exceeded. Where these are unavailable, a registered professional engineer familiar with the type of crane/derrick involved must determine this limitation in writing, which must not be exceeded.

(12) Weight of components. The weight of each of the components must be readily available.

(13) Components and configuration.

(a) The selection of components and configuration of the crane/derrick that affect the capacity or safe operation of this equipment must be in accordance with:

(i) Manufacturer's instructions, prohibitions, limitations, and specifications. Where these are unavailable, a registered professional engineer familiar with the type of crane/derrick involved must approve, in writing, the selection and configuration of components; or

(ii) Approved modifications that meet the requirements of WAC 296-155-53400 (58) and (59) (crane/derrick modifications).

(b) Post-assembly inspection. Upon completion of assembly, the crane/derrick must be inspected by the assembly/disassembly director to ensure compliance with (a) of this subsection and as follows:

(i) Upon completion of assembly, the crane/derrick must be inspected by a qualified person to assure that it is configured in accordance with manufacturer's criteria. For tower cranes, this inspection must be done by an accredited crane certifier.

(ii) Where manufacturer's criteria is unavailable, a qualified person must determine if a registered professional engineer (RPE) familiar with the type of crane/derrick involved is needed to develop criteria for the configuration. If an RPE is not needed, the employer must ensure that the criteria are developed by the qualified person. If an RPE is needed, the employer must ensure that they are developed by an RPE.

(c) Crane/derrick must not be used until an inspection demonstrates that it is configured in accordance with the applicable criteria.

(d) Documentation of this inspection must remain at the job site while the crane/derrick is in use.

(14) Shipping pins. Reusable shipping pins, straps, links, and similar equipment must be removed. Once they are removed they must either be stowed or otherwise stored so that they do not present a falling object hazard.

(15) Pile driving. Cranes used for pile driving must not have a jib attached during pile driving operations.

(16) The following are additional requirements for dismantling of booms and jibs, including dismantling for changing the length of booms and jibs (applies to both the use of manufacturer procedures and employer procedures):

(a) None of the pins in the pendants are to be removed (partly or completely) when the pendants are in tension. See, for example, Figure 3.

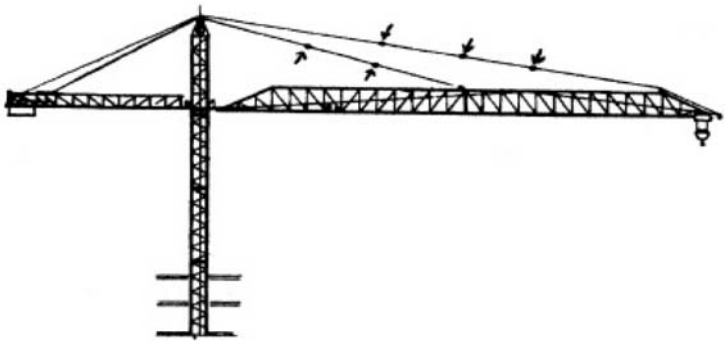

Figure 3. Pins (indicated by arrows) are not to be removed while pendants remain in tension.

(b) None of the pins (top and bottom) on boom sections located between the pendant attachment points and the crane/derrick body are to be removed (partly or completely) when the pendants are in tension. See, for example, Figures 4 and 5.

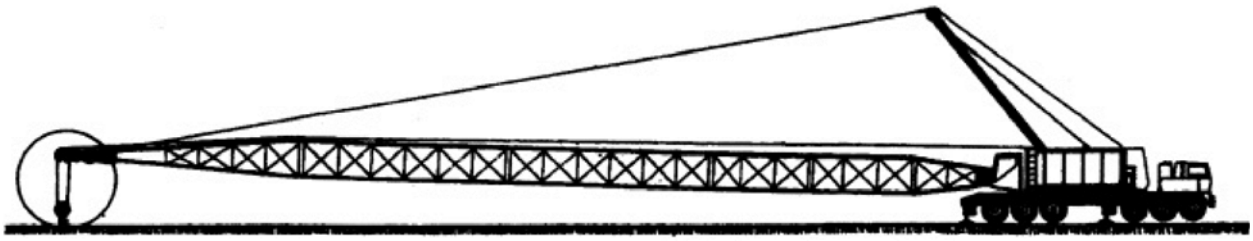

Figure 4. Pendant is in tension while connected to uppermost boom section, and no pins are to be removed.

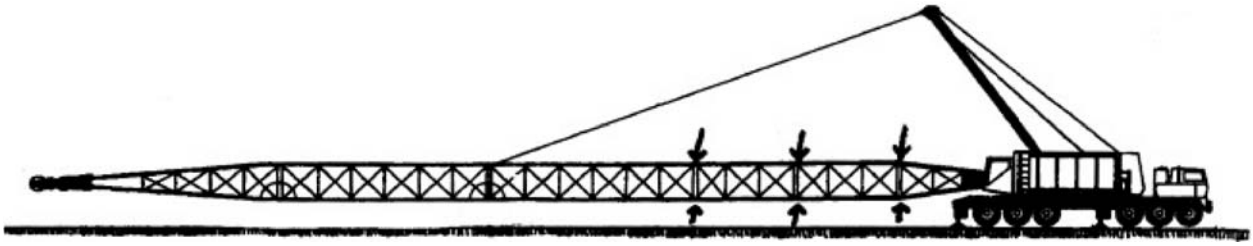

Figure 5. Pendant is in tension, and pins between pendant attachment point and crane body (indicated by arrows) are not to be removed. Note that, because the cantilevered portion of the boom is not supported, only the bottom pins ahead of the pendant may be removed. See Figure 8.

(c) None of the pins (top and bottom) on boom sections located between the uppermost boom section and the crane/derrick body are to be removed (partly or completely) when the boom is being supported by the uppermost boom section resting on the ground (or other support). See, for example, Figure 6.

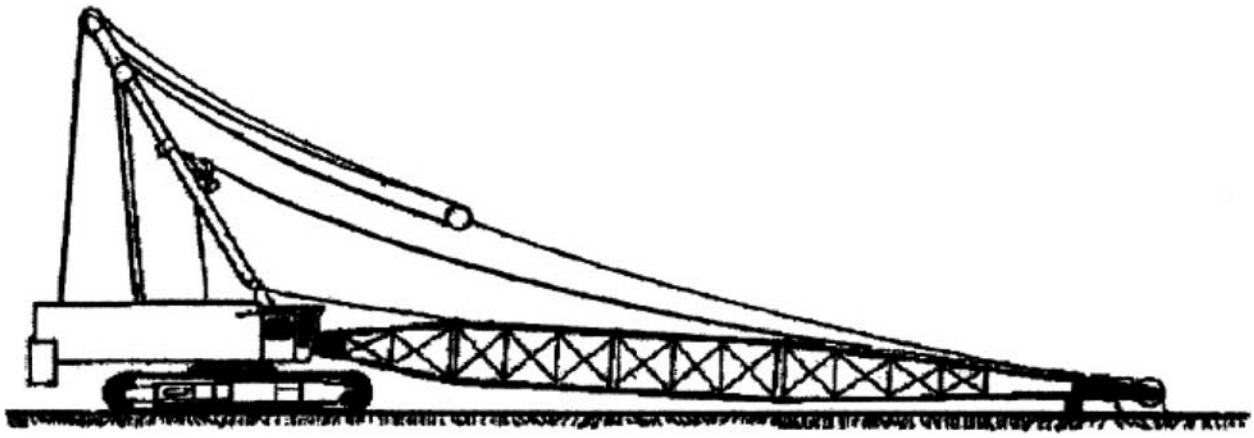

Figure 6. Uppermost boom section is resting on ground, and no pins between uppermost boom section and crane body are to be removed.

(d) None of the top pins on boom sections located on the cantilevered portion of the boom being removed (the portion being removed ahead of the pendant attachment points) are to be removed (partly or completely) until the cantilevered section to be removed is fully supported. See, for example, Figures 7 and 8.

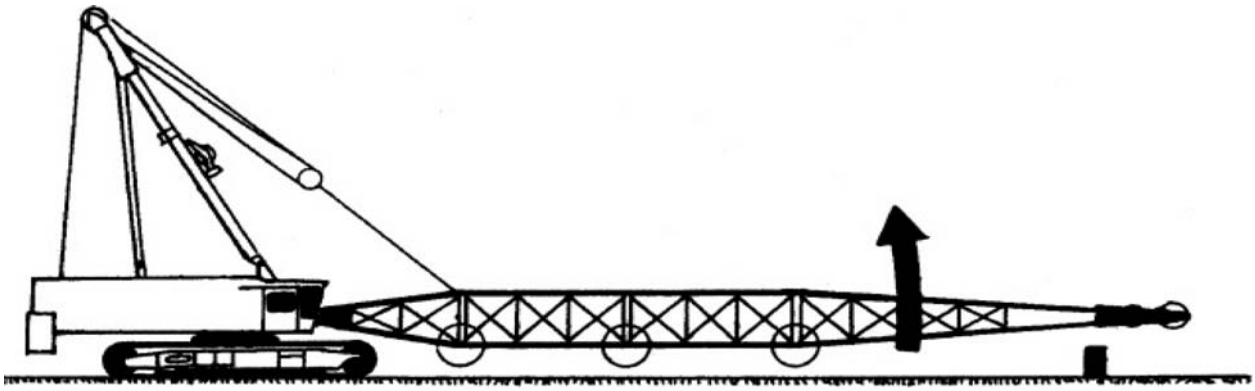

Figure 7. Cantilevered portion of boom is not supported, and top pins therefore are not to be removed. Bottom pins (circled) may be removed.

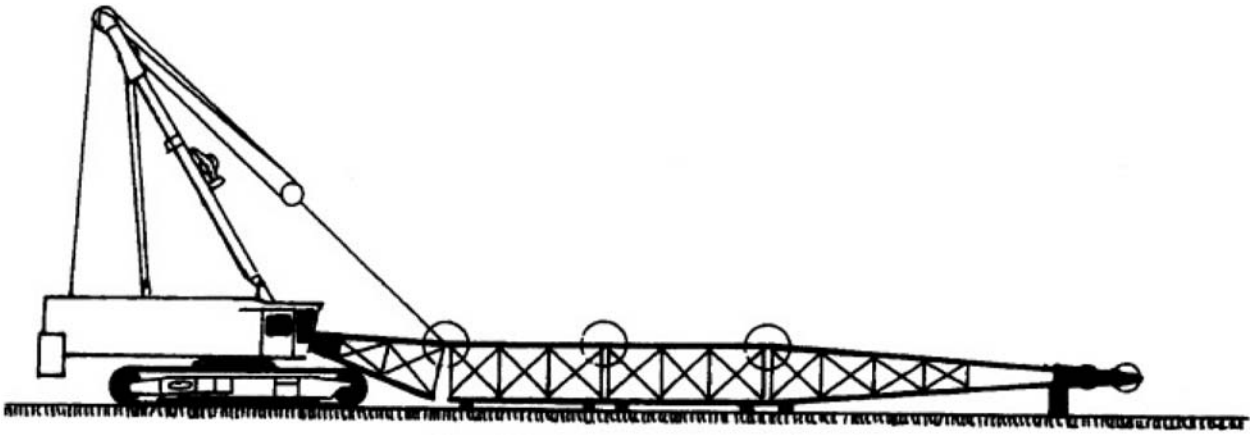

Figure 8. Cantilevered portion of boom is supported, and top pins (circled) may therefore be removed.

(17) When using employer procedures instead of manufacturer procedures for assembling or disassembling, the employer must ensure that the procedures are designed to:

(a) Prevent unintended dangerous movement, and to prevent collapse, of any parts of the crane/derrick.

(b) Provide adequate support and stability of all parts of the crane/derrick during the assembly/disassembly process.

(c) Position employees involved in the assembly/disassembly operation so that their exposure to movement or collapse is minimized.

(d) Qualified person. Employer procedures must be developed by a qualified person.

(18) Outriggers and stabilizers. When the load to be handled and the operating radius require the use of outriggers or stabilizers, or at any time when outriggers or stabilizers are used, the following requirements must be met:

(a) The outriggers or stabilizers must be either fully extended or, if manufacturer procedures permit, deployed as specified in the load chart.

(b) The outriggers must be set to remove the crane weight from the wheels, except for locomotive cranes (see (f) of this subsection for use of outriggers on locomotive cranes). This provision does not apply to stabilizers.

(c) When outrigger floats are used, they must be attached to the outriggers. When stabilizer floats are used they must be attached to the stabilizers.

(d) Each outrigger or stabilizer must be visible to the operator or to a signal person during extension and setting.

(e) Outrigger and stabilizer blocking must:

(i) Meet the requirements in subsection (10)(b) and (c) of this section.

(ii) Be placed only under the outrigger or stabilizer float/pad of the jack or, where the outrigger or stabilizer is designed without a jack, under the outer bearing surface of the extended outrigger or stabilizer beam.

(f) For locomotive cranes, when using outriggers or stabilizers to handle loads, the manufacturer's procedures must be followed. When lifting loads without using outriggers or stabilizers, the manufacturer's procedures must be met regarding truck wedges or screws.

(19) Rigging. In addition to the following requirements in WAC 296-155-556, 296-155-558, 296-155-560 and 296-155-562 and other requirements in this and other standards applicable to rigging, when rigging is used for assembly/disassembly, the employer must ensure that:

(a) The rigging work is done by a qualified rigger. See WAC 296-155-53306.

(b) Synthetic slings are protected from: Abrasive, sharp or acute edges, and configurations that could cause a reduction of the sling's rated capacity, such as distortion or localized compression. See WAC 296-155-55815(6), 296-155-55820(6) and 296-155-55825(6).

Note: Requirements for the protection of wire rope slings are contained in WAC 296-155-55805.

(c) When synthetic slings are used, the synthetic sling manufacturer's instructions, limitations, specifications and recommendations must be followed.

[Statutory Authority: RCW 49.17.010, 49.17.040, 49.17.050, 49.17.060 and chapter 49.17 RCW, and 29 C.F.R. 1926, Subpart CC. WSR 13-02-068, § 296-155-53402, filed 12/31/12, effective 2/1/13. Statutory Authority: RCW 49.17.010, 49.17.040, 49.17.050, 49.17.440, 49.17.060, and 29 C.F.R. 1926, Subpart CC. WSR 12-01-086, § 296-155-53402, filed 12/20/11, effective 2/1/12.]

WAC 296-155-53403 Fall protection. (1) Application.

(a) Subsections (2), (3)(b), (5) and (6) of this section apply to all cranes/derricks covered by this part except tower cranes.

(b) Subsections (3)(a), (4), (7), (10) and (11) of this section apply to all cranes/derricks covered by this part.

(c) Subsections (3)(c) and (9) of this section apply only to tower cranes.

(2) Boom walkways.

(a) Cranes/derricks manufactured after the effective date of this section with lattice booms must be equipped with walkways on the boom(s) if the vertical profile of the boom (from cord centerline to cord centerline) is six or more feet.

(b) Boom walkway criteria. The walkways must be at least twelve inches wide.

(3) Steps, handholds, ladders, grabrails, guardrails and railings.

(a) All steps, handholds, ladders and guardrails/railings/grabrails must be maintained in good condition.

(b) Cranes/derricks manufactured after the effective date of this section must be equipped so as to provide safe access and egress between the ground and the operator work station(s), including the forward and rear positions, by the provision of devices such as steps, handholds, ladders, and guardrails/railings/grabrails. These devices must meet the following criteria:

(i) Steps, handholds, ladders and guardrails/railings/grabrails must meet the criteria of SAE J185 (May 2003) or ISO 11660-2:1994(E) except where infeasible.

(ii) Walking/stepping surfaces, except for crawler treads, must have slip-resistant features/properties (such as diamond plate metal, strategically placed grip tape, expanded metal, or slip-resistant paint).

(c) Tower cranes manufactured after the effective date of this section must be equipped so as to provide safe access and egress between the ground and the cab, machinery platforms, and tower (mast), by the provision of devices such as steps, handholds, ladders, and guardrails/railings/grabrails. These devices must meet the following criteria:

(i) Steps, handholds, ladders, and guardrails/railings/grabrails must meet the criteria of ISO 11660-1:2008(E) and ISO 11660-3:2008(E) or SAE J185 (May 2003) except where infeasible.

(ii) Walking/stepping surfaces must have slip-resistant features/properties (such as diamond plate metal, strategically placed grip tape, expanded metal, or slip-resistant paint).

(4) Personal fall arrest and fall restraint systems must conform to the criteria in WAC 296-155-24510. Body harnesses must be used in personal fall arrest and fall restraint systems.

(5) For nonassembly/disassembly work, the employer must provide and ensure the use of fall protection equipment for employees who are on a walking/working surface with an unprotected side or edge more than six feet above a lower level as follows:

(a) When moving point-to-point:

(i) On nonlattice booms (whether horizontal or not horizontal).

(ii) On lattice booms that are not horizontal.

(iii) On horizontal lattice booms where the fall distance is ten feet or more.

(b) While at a work station on any part of the crane (including the boom, of any type).

Note: If the equipment is running and the employee is at or near the draw-works, precautions should be taken to ensure the fall protection gear will not become entangled.

(6) For assembly/disassembly work, the employer must provide and ensure the use of fall protection equipment for employees who are on a walking/working surface with an unprotected side or edge more than ten feet above a lower level.

Note: If the equipment is running and the employee is at or near the draw-works, precautions should be taken to ensure the fall protection gear will not become entangled.

(7) Anchorage criteria.

(a) Anchorages used for attachment of personal fall arrest equipment must be independent of any anchorage being used to support or suspend platforms and capable of supporting at least five thousand pounds (22.2 kN) per employee attached, or must be designed, installed, and used as follows:

(i) As part of a complete personal fall arrest system which maintains a safety factor of at least two; and

(ii) Under the supervision of a qualified person.

(b) Positioning devices must be secured to an anchorage capable of supporting at least twice the potential impact load of an employee's fall or three thousand pounds (13.3 kN), whichever is greater.

(c) Anchorages for personal fall arrest and positioning device systems.

(i) Personal fall arrest systems must be anchored to any apparently substantial part of the equipment unless a competent person, from a visual inspection, without an engineering analysis, would conclude that the criteria in (a) of this subsection would not be met.

(ii) Positioning device systems must be anchored to any apparently substantial part of the crane unless a competent person, from a visual inspection, without an engineering analysis, would conclude that the criteria in (b) of this subsection would not be met.

(iii) Attachable anchor devices (portable anchor devices that are attached to the crane) must meet the anchorage criteria in (a) of this subsection for personal fall arrest systems and (b) of this subsection for positioning device systems.

(8) Anchorages for fall restraint systems. Fall restraint systems must be anchored to any part of the crane that is capable of withstanding twice the maximum load that an employee may impose on it during reasonably anticipated conditions of use.

(9) Tower cranes.

(a) For work other than erecting, climbing, and dismantling, the employer must provide and ensure the use of fall protection equipment for employees who are on a walking/working surface with an unprotected side or edge more than six feet above a lower level.

Note: If the equipment is running and the employee is at or near the draw-works, precautions should be taken to ensure the fall protection gear will not become entangled.

(b) For erecting, climbing, and dismantling work, the employer must provide and ensure the use of fall protection equipment for employees who are on a walking/working surface with an unprotected side or edge more than ten feet above a lower level.

(10) Anchoring to the load line. A personal fall arrest system is permitted to be anchored to the crane/derrick's hook (or other part of the load line) where all of the following requirements are met:

(a) A qualified person has determined that the set-up and rated capacity of the crane/derrick (including the hook, load line and rigging) meets or exceeds the requirements in subsection (7)(a) of this section.

(b) The crane operator must be at the worksite and informed that the crane is being used for this purpose.

(c) No load is suspended from the load line when the personal fall arrest system is anchored to the crane/derrick's hook (or other part of the load line).

(11) Training. The employer must train each employee who may be exposed to fall hazards while on, or hoisted by, cranes/derricks covered by this section on all of the following:

(a) The requirements in this part that address fall protection.

(b) The applicable requirements in Parts C-1 and K of this chapter.

[Statutory Authority: RCW 49.17.010, 49.17.040, 49.17.050, 49.17.060 and chapter 49.17 RCW, and 29 C.F.R. 1926, Subpart CC. WSR 13-02-068, § 296-155-53403, filed 12/31/12, effective 2/1/13. Statutory Authority: RCW 49.17.010, 49.17.040, 49.17.050, 49.17.440, 49.17.060, and 29 C.F.R. 1926, Subpart CC. WSR 12-01-086, § 296-155-53403, filed 12/20/11, effective 2/1/12.]

WAC 296-155-53404 Wire rope. (1) Selection and installation criteria.

(a) Original crane/derrick wire rope and replacement wire rope must be selected and installed in accordance with the requirements of this section. Selection of replacement wire rope must be in accordance with the recommendations of the wire rope manufacturer, the crane/derrick manufacturer, or a qualified person.

(b) Wire rope design criteria: Wire rope (other than rotation resistant rope) must comply with either Option (1) or Option (2) of this section, as follows:

(i) Option (1). Wire rope must comply with Section 5-1.7.1 of ASME B30.5-2007 except that section's paragraph (c) must not apply.

(ii) Option (2). Wire rope must be designed to have, in relation to the crane's/derrick's rated capacity, a sufficient minimum breaking force and design factor so that compliance with the applicable inspection provisions in this section will be an effective means of preventing sudden rope failure.

(c) Wire rope must be compatible with the safe functioning of the crane/derrick.

(d) Boom hoist reeving.

(i) Fiber core ropes must not be used for boom hoist or luffing attachment reeving, except for derricks.

(ii) Rotation resistant ropes must be used for boom hoist reeving only where the requirements of (e) of this subsection are met.

(e) Rotation resistant ropes.

(i) Definitions.

(A) Type I rotation resistant wire rope (Type I). Type I rotation resistant rope is stranded rope constructed to have little or no tendency to rotate or, if guided, transmits little or no torque. It has at least fifteen outer strands and comprises an assembly of at least three layers of strands laid helically over a center in two operations. The direction of lay of the outer strands is opposite to that of the underlying layer.

(B) Type II rotation resistant wire rope (Type II). Type II rotation resistant rope is stranded rope constructed to have resistance to rotation. It has at least ten outer strands and comprises an assembly of two or more layers of strands laid helically over a center in two or three operations. The direction of lay of the outer strands is opposite to that of the underlying layer.

(C) Type III rotation resistant wire rope (Type III). Type III rotation resistant rope is stranded rope constructed to have limited resistance to rotation. It has no more than nine outer strands, and comprises an assembly of two layers of strands laid helically over a center in two operations. The direction of lay of the outer strands is opposite to that of the underlying layer.

(ii) Requirements.

(A) Types II and III with an operation design factor of less than five must not be used for duty cycle or repetitive lifts.

(B) Rotation resistant ropes (including Types I, II and III) must have an operating design factor of no less than 3.5.

(C) Type I must have an operating design factor of no less than five, except where the wire rope manufacturer and the crane/derrick manufacturer approves the design factor, in writing.

(D) Types II and III must have an operating design factor of no less than five, except where the requirements of (e)(iii) of this subsection are met.

(iii) When Types II and III with an operation design factor of less than five are used (for nonduty cycle, nonrepetitive lifts), the following requirements must be met for each lifting operation:

(A) A qualified person must inspect the rope in accordance with subsection (2)(a) of this section. The rope must be used only if the qualified person determines that there are no deficiencies constituting a hazard. In making this determination, more than one broken wire in any one rope lay must be considered a hazard.

(B) Operations must be conducted in such a manner and at such speeds as to minimize dynamic effects.

(C) Each lift made under these provisions must be recorded in the monthly and annual inspection documents. Such prior uses must be considered by the qualified person in determining whether to use the rope again.

(iv) Additional requirements for rotation resistant ropes for boom hoist reeving.

(A) Rotation resistant ropes must not be used for boom hoist reeving, except where the requirements of (e)(iv)(B) of this subsection are met.

(B) Rotation resistant ropes may be used as boom hoist reeving when load hoists are used as boom hoists for attachments such as luffing attachments or boom and mast attachment systems. Under these conditions, all of the following requirements must be met:

(I) The drum must provide a first layer rope pitch diameter of not less than eighteen times the nominal diameter of the rope used.

(II) The requirements in WAC 296-155-53400(44) (irrespective of the date of manufacture of the crane/derrick), and WAC 296-155-53400(45).

(III) The requirements of ANSI/ASME B30.5-2007, Section 5-1.3.2(a), (a)(2) through (a)(4), (b) and (d), except that the minimum pitch diameter for sheaves used in multiple rope reeving is eighteen times the nominal diameter of the rope used instead of the value of sixteen specified in Section 5-1.3.2(d).

(IV) All sheaves used in the boom hoist reeving system must have a rope pitch diameter of not less than eighteen times the nominal diameter of the rope used.

(V) The operating design factor for the boom hoist reeving system must be not less than five.

(VI) The operating design factor for these ropes must be the total minimum breaking force of all parts of rope in the system divided by the load imposed on the rope system when supporting the static weights of the structure and the load within the crane's/derrick's rated capacity.

(VII) When provided, a power-controlled lowering system must be capable of handling rated capacities and speeds as specified by the manufacturer.

(f) Wire rope clips used in conjunction with wedge sockets must be attached to the unloaded dead end of the rope only, except that the use of devices specifically designed for dead-ending rope in a wedge socket is permitted.

(g) Socketing must be done in the manner specified by the manufacturer of the wire rope or fitting.

(h) Prior to cutting a wire rope, seizings must be placed on each side of the point to be cut. The length and number of seizings must be in accordance with the wire rope manufacturer's instructions.

(2) Inspection of wire ropes.

(a) Shift inspection.

(i) A competent person must begin a visual inspection prior to each shift the crane/derrick is used, which must be completed before or during that shift. The inspection must consist of observation of accessible wire ropes (running and standing) that are likely to be in use during the shift for apparent deficiencies, including those listed in (a)(ii) of this subsection. Untwisting (opening) of wire rope or booming down is not required as part of this inspection.

(A) Category I. Apparent deficiencies in this category include the following:

(I) Distortion of the wire rope structure such as kinking, crushing, unstranding, birdcaging, signs of core failure or steel core protrusion between the outer strands.

(II) Corrosion.

(III) Electric arc damage (from a source other than power lines) or heat damage.

(IV) Improperly applied end connections.

(V) Corroded, cracked, bent, or worn end connections (such as from severe service).

(B) Category II. Apparent deficiencies in this category are:

(I) Visibly broken wires in running wire ropes: Six randomly distributed broken wires in one rope lay or three broken wires in one strand in one rope lay, where a rope lay is the length along the rope in which one strand makes a complete revolution around the rope;

(II) Visibly broken wires in rotation resistant ropes: Two randomly distributed broken wires in six rope diameters or four randomly distributed broken wires in thirty rope diameters;

(III) Visibly broken wires in pendants or standing wire ropes: More than two broken wires in one rope lay located in rope beyond end connections and/or more than one broken wire at an end connection; and

(IV) A diameter reduction of more than five percent from nominal diameter.

(C) Category III. Apparent deficiencies in this category include the following:

(I) In rotation resistant wire rope, core protrusion or other distortion indicating core failure.

(II) Prior electrical contact with a power line.

(III) A broken strand.

(ii) Critical review items. The competent person must give particular attention to all of the following:

(A) Rotation resistant wire rope in use.

(B) Wire rope being used for boom hoists and luffing hoists, particularly at reverse bends.

(C) Wire rope at flange points, crossover points and repetitive pickup points on drums.

(D) Wire rope at or near terminal ends.

(E) Wire rope in contact with saddles, equalizer sheaves or other sheaves where rope travel is limited.

(iii) Removal from service.

(A) If a deficiency in Category I is identified, an immediate determination must be made by the competent person as to whether the deficiency constitutes a safety hazard. If the deficiency is determined to constitute a safety hazard, operations involving use of the wire rope in question must be prohibited until:

(I) The wire rope is replaced; or

(II) If the deficiency is localized, the problem is corrected by removing the damaged section of the wire rope; the undamaged portion may continue to be used. Joining lengths of wire rope by splicing is prohibited. If a rope is shortened under this subsection, the employer must ensure that the drum will still have two wraps of wire when the load and/or boom is in its lowest position.

(B) If a deficiency in Category II is identified, operations involving use of the wire rope in question must be prohibited until:

(I) The employer complies with the wire rope manufacturer's established criterion for removal from service or a different criterion that the wire rope manufacturer has approved in writing for that specific wire rope;

(II) The wire rope is replaced.

(C) If the deficiency is localized, the problem is corrected by severing the wire rope in two; the undamaged portion may continue to be used. Joining lengths of wire rope by splicing is prohibited. If a rope is shortened under this subsection, the employer must ensure that the drum will still have two wraps of wire when the load and/or boom is in its lowest position. If a deficiency in category III is identified, operations involving use of the wire rope in question must be prohibited until:

(I) The wire rope is replaced; or

(II) If the deficiency (other than power line contact) is localized, the problem is corrected by severing the wire rope in two; the undamaged portion may continue to be used. Joining lengths of wire rope by splicing is prohibited. Repair of wire rope that contacted an energized power line is also prohibited. If a rope is shortened under this subsection, the employer must ensure that the drum will still have two wraps of wire when the load and/or boom is in its lowest position.

(D) Where a wire rope is required to be removed from service under this section, either the crane/derrick (as a whole) or the hoist with that wire rope must be tagged-out, in accordance with WAC 296-155-53400(67), until the wire rope is repaired or replaced.

(b) Monthly inspection.

(i) Each month an inspection must be conducted in accordance with (a) of this subsection (shift inspection).

(ii) The inspection must include any deficiencies that the qualified person who conducts the annual inspection determines under (c)(iii) of this subsection must be monitored.

(iii) Wire ropes on a crane/derrick must not be used until an inspection under this subsection demonstrates that no corrective action under (a)(iii) of this subsection is required.

(iv) This inspection must be documented and be kept and made available upon request. Electronic records are acceptable.

(c) Annual/comprehensive, for cranes and derricks not covered by WAC 296-155-531 through 296-155-53214.

(i) At least every twelve months, wire ropes in use on the crane/derrick must be inspected by a qualified person in accordance with (a) of this subsection (shift inspection).

(ii) In addition, at least every twelve months, the wire ropes in use on the crane/derrick must be inspected by a qualified person, as follows:

(A) The inspection must be for deficiencies of the types listed in (a)(i)(B) of this subsection.

(B) The inspection must be complete and thorough, covering the surface of the entire length of the wire ropes, with particular attention given to all of the following:

(I) Critical review items listed in (a)(ii) of this subsection.

(II) Those sections that are normally hidden during shift and monthly inspections.

(III) Wire rope in contact with saddles, equalizer sheaves or other sheaves where rope travel is limited.

(IV) Wire rope subject to reverse bends.

(V) Wire rope passing over sheaves.

(VI) Wire rope at or near terminal ends.

(C) Exception: In the event an inspection under (c)(ii) of this subsection is not feasible due to existing set-up and configuration of the crane/derrick (such as where an assist crane is needed) or due to site conditions (such as a dense urban setting). The inspection must consist of observation of the working range plus three additional wraps (running and standing) prior to use.

(iii) If a deficiency is identified, an immediate determination must be made by the qualified person as to whether the deficiency constitutes a safety hazard.

(A) If the deficiency is determined to constitute a safety hazard, operations involving the use of the wire rope in question is prohibited until:

(I) The wire rope is replaced; or

(II) If the deficiency is localized, the problem is corrected by severing the wire rope in two; the undamaged portion may continue to be used. Joining lengths of wire rope by splicing is prohibited. If a rope is shortened under this subsection, the employer must ensure that the drum will still have two wraps of wire when the load and/or boom is in its lowest position.

(B) If the qualified person determines that, though not presently a safety hazard, the deficiency needs to be monitored, the employer must ensure that the deficiency is checked in the monthly inspections.

(iv) This inspection must be documented and be kept and made available upon request. Electronic records are acceptable.

(d) Rope lubricants that are of the type that hinder inspection must not be used.

(3) All documents produced under this section must be available, during the applicable document retention period, to all persons who conduct inspections under this section.

[Statutory Authority: RCW 49.17.010, 49.17.040, 49.17.050, 49.17.060 and chapter 49.17 RCW, and 29 C.F.R. 1926, Subpart CC. WSR 13-02-068, § 296-155-53404, filed 12/31/12, effective 2/1/13. Statutory Authority: RCW 49.17.010, 49.17.040, 49.17.050, 49.17.440, 49.17.060, and 29 C.F.R. 1926, Subpart CC. WSR 12-01-086, § 296-155-53404, filed 12/20/11, effective 2/1/12.]

WAC 296-155-53405 Inspections. (1) Cranes that have had modifications or additions as defined in WAC 296-155-53214 must be inspected by an accredited crane certifier after such modifications/additions have been completed, prior to initial use.

(2) Repaired/adjusted equipment.

(a) Cranes that have had significant repairs as defined in WAC 296-155-53214 must be inspected by an accredited crane certifier after such repairs have been completed, prior to initial use.

(b) Cranes that have had a repair or adjustment not defined in WAC 296-155-53214, that relates to safe operation (such as: A repair or adjustment to a safety device or operator aid, or to a critical part of a control system, power plant, braking system, load-sustaining structural components, load hook, or in-use operating mechanism), must be inspected by a qualified person after such a repair or adjustment has been completed, prior to initial use. The inspection must meet all of the following requirements:

(i) The qualified person must determine if the repair/adjustment meets manufacturer equipment criteria (where applicable and available).

(ii) Where manufacturer equipment criteria are unavailable or inapplicable, the qualified person must:

(A) Determine if a registered professional engineer (RPE) is needed to develop criteria for the repair/adjustment. If an RPE is not needed, the employer must ensure that the criteria are developed by the qualified person. If an RPE is needed, the employer must ensure that they are developed by an RPE.

(B) Determine if the repair/adjustment meets the criteria developed in accordance with (b)(ii)(A) of this subsection.

(iii) The inspection must include functional testing of the repaired/adjusted parts and other components that may be affected by the repair/adjustment.

(c) Equipment must not be used until an inspection under this section demonstrates that the repair/adjustment meets the requirements of (b)(i) of this subsection (or, where applicable, in (b)(ii) of this subsection).

(3) A competent person must begin a visual inspection prior to each shift the crane will be used, which must be completed before or during that shift. The inspection must consist of observation for apparent deficiencies. Taking apart equipment components and booming down is not required as part of this inspection unless the results of the visual inspection or trial operation indicate that further investigation necessitating taking apart crane components or booming down is needed. Determinations made in conducting the inspection must be reassessed in light of observations made during operation. At a minimum, the inspection must include all of the following:

(a) Control mechanisms for maladjustments interfering with proper operation;

(b) Control and drive mechanisms for apparent excessive wear of components and contamination by lubricants, water or other foreign matter;

(c) Air, hydraulic, and other pressurized lines for deterioration or leakage, particularly those which flex in normal operation;

(d) Hydraulic system for proper fluid level;

(e) Hooks and latches for deformation, cracks, excessive wear, or damage such as from chemicals or heat;

(f) Wire rope reeving for compliance with the manufacturer's specifications;

(g) Wire rope, in accordance with WAC 296-155-53404;

(h) Electrical apparatus for malfunctioning, signs of apparent excessive deterioration, dirt or moisture accumulation;

(i) Tires (when in use) for proper inflation and condition;

(j) Ground conditions around the equipment for proper support, including ground settling under and around outriggers/stabilizers and supporting foundations, groundwater accumulation, or similar conditions. This subsection does not apply to the inspection of ground conditions for railroad tracks and their underlying support when the railroad tracks are part of the general railroad system of transportation that is regulated pursuant to the Federal Railroad Administration under 49 C.F.R., Part 213;

(k) The crane for level position within the tolerances specified by the crane manufacturer's recommendations, both before each shift and after each move and setup;

(l) Operator cab windows for significant cracks, breaks, or other deficiencies that would hamper the operator's view;

(m) Rails, rail stops, rail clamps and supporting surfaces when the crane has rail traveling. This subsection does not apply to the inspection of rails, rail stops, rail clamps and supporting surfaces when the railroad tracks are part of the general railroad system of transportation that is regulated pursuant to the Federal Railroad Administration under 49 C.F.R., Part 213;

(n) Safety devices and operational aids for proper operation;

(o) Derricks must have guys inspected for proper tension.

(4) The employer must keep monthly inspection records (see items listed in subsection (3) of this section). These inspection records must be kept for at least three months. This report must contain the following information:

(a) The items checked and the results of the inspection;

(b) The name and signature of the person who conducted the inspection and the date.

(5) If any deficiency is found during the inspection, an immediate determination must be made by the competent person as to whether the deficiency constitutes a safety hazard. If the deficiency is determined to constitute a safety hazard, the equipment must be taken out of service until it has been corrected and approved by a qualified person.

(6) If any deficiency in safety devices/operational aids is identified, the action specified in WAC 296-155-53410 and 296-155-53412 must be taken prior to using the equipment.

(7) If any deficiency is identified, an immediate determination must be made by a qualified person as to whether the deficiency constitutes a safety hazard.

(a) If a qualified person determines that a deficiency is a safety hazard, the crane must be taken out of service until it has been corrected, evaluated, and approved by a qualified person, except when temporary alternative measures are implemented as allowed in WAC 296-155-53412 and for tower cranes see WAC 296-155-54100(61).

(b) If a qualified person determines that, though not presently a safety hazard, the deficiency needs to be monitored, the employer must ensure that the deficiency is checked in the monthly inspections.

(8) Severe service. Where the severity of use/conditions is such that there is a reasonable probability of damage or excessive wear (such as loading that may have exceeded rated capacity, shock loading that may have exceeded rated capacity, prolonged exposure to a corrosive atmosphere), the employer must stop using the crane and a qualified person must:

(a) Inspect the crane for structural damage to determine if the crane can continue to be used safely.

(b) In light of the use/conditions determine whether any items/conditions listed in subsection (7) of this section need to be inspected; if so, the qualified person must inspect those items/conditions.

(c) If a deficiency is found, the employer must follow the requirements in subsection (7)(a) of this section.

(9) Cranes not in regular use. Cranes that have been idle for three months or more must be inspected by a qualified person in accordance with the requirements of subsection (3) of this section before initial use.

(10) Any part of a manufacturer's procedures regarding inspections that relate to safe operation (such as to a safety device or operational aid, critical part of a control system, power plant, braking system, load-sustaining structural components, load hook, or in-use operating mechanism) that is more comprehensive or has a more frequent schedule of inspection than the requirements of this section must be followed.

(11) All documents produced under this section must be available, during the applicable document retention period, to all persons who conduct inspections under this section.

[Statutory Authority: RCW 49.17.010, 49.17.040, 49.17.050, 49.17.440, 49.17.060, and 29 C.F.R. 1926, Subpart CC. WSR 12-01-086, § 296-155-53405, filed 12/20/11, effective 2/1/12.]

WAC 296-155-53406 Signals. (1) A qualified signal person that meets the requirements in WAC 296-155-53302 must be provided in each of the following situations:

(a) The point of operation, meaning the load travel or the area near or at load placement, is not in full view of the crane/derrick operator.

(b) When the crane is traveling, the view in the direction of travel is obstructed.

(c) Due to site specific safety concerns, either the crane/derrick operator or the person handling the load determines that it is necessary.

(2) Types of signals. Signals to crane/derrick operators must be by hand, voice, audible, or other means at least as effective.

(3) Hand signals.

(a) When using hand signals, the standard method as established in the applicable ASME B30 standards must be used. Where use of the standard method for hand signals is infeasible, or where an operation or use of an attachment is not covered in the standard method, nonstandard hand signals may be used in accordance with (b) of this subsection.

Note: See WAC 296-155-56400 for the hand signal chart.

(b) Nonstandard hand signals. When using nonstandard hand signals, the signal person, operator, and lift director must contact each other prior to the operation and agree on the nonstandard hand signals that will be used.

(4) Signals other than hand, voice or audible signals may be used where the employer demonstrates that the signals provided are at least equally effective communications as voice, audible, or standard method hand signals.

(5) Use and suitability.

(a) Prior to beginning operations, the operator, signal person, and lift director, must contact each other and agree on the voice signals that will be used. Once the voice signals are agreed upon, these employees need not meet again to discuss voice signals unless another employee is added or substituted, there is confusion about the voice signals, or a voice signal is to be changed.

(b) Each voice signal must contain the following three elements, given in the following order: Function (such as hoist, boom, etc.) and direction; distance and/or speed; function stop.

(c) The operator, signal person and lift director, must be able to effectively communicate in the language used.

(d) The signals used (hand, voice, audible, or other effective means), and means of transmitting the signals to the operator (such as direct line of sight, video, radio, etc.) must be appropriate for the site conditions.

(e) Signals must be discernible or audible at all times. The crane operator must not respond unless signals are clearly understood.

(6) During operations requiring signals, the ability to transmit signals between the operator and signal person must

be maintained. If that ability is interrupted at any time, the operator must safely stop operations requiring signals until it is reestablished and a proper signal is given and understood.

(7) If the operator becomes aware of a safety problem and needs to communicate with the signal person, the operator must safely stop operations. Operations must not resume until the operator and signal person agree that the problem has been resolved.

(8) Only one person gives signals to a crane/derrick at a time, except in circumstances covered by subsection (9) of this section.

(9) Anyone who becomes aware of a safety problem must alert the operator or signal person by giving the stop or emergency stop signal. The operator must obey a stop (or emergency stop) signal, irrespective of who gives it.

(10) All directions given to the operator by the signal person must be given from the operator's direction perspective.

(11) Communication with multiple cranes/derricks. Where a signal person(s) is in communication with more than one crane/derrick, a system for identifying the crane/derrick for which each signal is intended must be used, as follows:

(a) For each signal, prior to giving the function/direction, the signal person must identify the crane/derrick for which the signal is intended; or

(b) An equally effective method of identifying which crane/derrick the signal is intended for must be used.

(12) Hand signal chart. Hand signal charts must be either posted on the crane/derrick or conspicuously posted in the vicinity of the hoisting operations.

(13) Radio, telephone or other electronic transmission of signals.

(a) The device(s) used to transmit signals must be tested on site before beginning operations to ensure that the signal transmission is effective, clear, and reliable.

(b) Signal transmission must be through a dedicated channel except:

(i) Multiple cranes/derricks and one or more signal persons may share a dedicated channel for the purpose of coordinating operations.

(ii) Where a crane is being operated on or adjacent to railroad tracks, and the actions of the crane operator need to be coordinated with the movement of other equipment or trains on the same or adjacent tracks.

(c) The operator's reception of signals must be made by a hands-free system.

[Statutory Authority: RCW 49.17.010, 49.17.040, 49.17.050, 49.17.060 and chapter 49.17 RCW, and 29 C.F.R. 1926, Subpart CC. WSR 13-02-068, § 296-155-53406, filed 12/31/12, effective 2/1/13. Statutory Authority: RCW 49.17.010, 49.17.040, 49.17.050, 49.17.440, 49.17.060, and 29 C.F.R. 1926, Subpart CC. WSR 12-01-086, § 296-155-53406, filed 12/20/11, effective 2/1/12.]

WAC 296-155-53408 Power line safety. (1) Assembly and disassembly of crane/derrick.

(a) Before assembling or disassembling crane/derrick, the employer must determine if any part of the crane/derrick, load line or load (including rigging and lifting accessories) could get, in the direction or area of assembly, closer than twenty feet of a power line that is up to 350 kV or closer than fifty feet of a power line that exceeds 350 kV during the assembly/disassembly process. If so, the employer must meet the requirements in Option (1), Option (2), or Option (3), as follows:

(i) Option (1) - Deenergize and ground. Confirm from the utility owner/operator that the power line has been deenergized and visibly grounded at the worksite.

(ii) Option (2) - Clearance. Ensure that no part of the crane/derrick, load line or load (including rigging and lifting accessories), gets closer than twenty feet of a power line that is up to 350 kV or closer than fifty feet of a power line that exceeds 350 kV by implementing the measures specified in (b) of this subsection.

(iii) Option (3) - Table 4 clearance.

(A) Determine the line's voltage and the minimum approach distance permitted under Table 4 of this section.

(B) Determine if any part of the crane/derrick, load line or load (including rigging and lifting accessories), could get closer than the minimum approach distance of the power line permitted under Table 4 of this section. If so, then the employer must follow the requirements in (b) of this subsection to ensure that no part of the crane/derrick, load line, or load (including rigging and lifting accessories), gets closer to the line than the minimum approach distance.

(b) Preventing encroachment/electrocution. Where encroachment precautions are required under Option (2), or Option (3), all of the following requirements must be met:

(i) Conduct a planning meeting with the assembly/disassembly director, operator, assembly/disassembly crew and the other workers who will be in the assembly/disassembly area to review the location of the power line(s) and the steps that will be implemented to prevent encroachment/electrocution.

(ii) If tag lines are used, they must be nonconductive.

(iii) At least one of the following additional measures must be in place. The measure selected from this list must be effective in preventing encroachment. The additional measures are:

(A) Use a dedicated spotter who is in continuous contact with the crane/derrick operator, plus an elevated warning line, barricade, or line of signs, in view of the spotter, equipped with flags or similar high-visibility markings. The dedicated spotter must:

(I) Be equipped with a visual aid to assist in identifying the minimum clearance distance. Examples of a visual aid include: A clearly visible line painted on the ground; a clearly visible line on stanchions; a set of clearly visible line-of-sight landmarks (such as a fence post behind the dedicated spotter and a building corner ahead of the dedicated spotter).

(II) Be positioned to effectively gauge the clearance distance.

(III) Where necessary, use equipment that enables the dedicated spotter to communicate directly with the operator, in accordance with WAC 296-155-53406(13) (radio, telephone, or other electronic transmission of signals).

(IV) Give timely information to the operator so that the required clearance distance can be maintained.

Note: To be considered a dedicated spotter, the requirements of WAC 296-155-53302 (Signal person qualifications) must be met and his/her sole responsibility is to watch the separation between the power line and the equipment, the load line and load (including rigging and lifting accessories), and ensure through communication with the operator that the applicable minimum approach distance is not breached.

(B) A proximity alarm set to give the operator sufficient warning to prevent encroachment.

(C) A device that automatically warns the operator when to stop movement, such as a range control warning device. Such a device must be set to give the operator sufficient warning to prevent encroachment.

(D) A device that automatically limits range of movement, set to prevent encroachment.

(c) Assembly/disassembly below power lines is prohibited. No part of a crane/derrick, load line or load (including rigging and lifting accessories), whether partially or fully assembled, is allowed below a power line unless the employer has confirmed that the utility owner/operator has deenergized and (at the worksite) visibly grounded the power line.

(d) Assembly/disassembly inside Table 4 clearance is prohibited. No part of a crane/derrick, load line or load (including rigging and lifting accessories), whether partially or fully assembled, is allowed closer than the minimum approach distance under Table 4 of a power line unless the employer has confirmed that the utility owner/operator has deenergized and (at the worksite) visibly grounded the power line.

(e) Voltage information. Where Option (3) is used, the utility owner/operator of power lines must provide the requested voltage information prior to commencement of work or within two working days of the employer's request.

(f) Power lines presumed energized. The employer must assume that all power lines are energized unless the utility owner/operator confirms that the power line has been and continues to be deenergized and visibly grounded at the worksite.

(g) Posting of electrocution warnings. There must be at least one electrocution hazard warning conspicuously posted in the cab so that it is in view of the operator and (except for overhead gantry and tower cranes) at least two on the outside of the crane/derrick.

(2) Operation of crane/derrick.

(a) Hazard assessments and precautions inside the work zone. Before beginning crane/derrick operations, the employer must:

(i) Identify the work zone.

(A) Define a work zone by demarcating boundaries (such as with flags, or a device such as a range limit device or range control warning device) and prohibiting the operator from operating the crane/derrick past those boundaries; or

(B) Define the work zone as the area three hundred sixty degrees around the crane/derrick, up to its maximum working radius.

(ii) Determine if any part of the crane/derrick, load line or load (including rigging and lifting accessories), if operated up to its maximum working radius in the work zone, could get closer than twenty feet of a power line that is up to 350 kV or closer than fifty feet of a power line that exceeds 350 kV. If so, the employer must meet the requirements in Option (1), Option (2), or Option (3) as follows:

(A) Option (1) - Deenergize and ground. Confirm from the utility owner/operator that the power line has been deenergized and visibly grounded at the worksite.

(B) Option (2) - Twenty-foot clearance. Ensure that no part of the crane/derrick, load line, or load (including rigging and lifting accessories), gets closer than twenty feet to the power line by implementing the measures specified in (b) of this subsection.

(C) Option (3) - Table 4 clearance.

(I) Determine the line's voltage and the minimum approach distance permitted under Table 4 of this section.

(II) Determine if any part of the crane/derrick, load line or load (including rigging and lifting accessories), while operating up to its maximum working radius in the work zone, could get closer than the minimum approach distance of the power line permitted under Table 4 of this section. If so, then the employer must follow the requirements in (b) of this subsection to ensure that no part of the crane/derrick, load line, or load (including rigging and lifting accessories), gets closer to the line than the minimum approach distance.

(b) Preventing encroachment/electrocution. Where encroachment precautions are required under Option (2) or Option (3), all of the following requirements must be met:

(i) Conduct a planning meeting with the operator and the other workers who will be in the area of the crane/derrick or load to review the location of the power line(s), and the steps that will be implemented to prevent encroachment/electrocution.

(ii) If tag lines are used, they must be nonconductive.

(iii) Erect and maintain an elevated warning line, barricade, or line of signs, in view of the operator, equipped with flags or similar high-visibility markings, at twenty feet from a power line that is up to 350 kV or fifty feet from a power line that exceeds 350 kV (if using Option (2)) or at the minimum approach distance under Table 4 of this section (if using Option (3)). If the operator is unable to see the elevated warning line, a dedicated spotter must be used as described in (iv)(B) of this subsection in addition to implementing one of the measures described in (b)(i), (iii) through (v) of this subsection.

(iv) Implement at least one of the following measures:

(A) A proximity alarm set to give the operator sufficient warning to prevent encroachment.

(B) Use a dedicated spotter who is in continuous contact with the crane/derrick operator, plus an elevated warning line, barricade, or line of signs, in view of the spotter, equipped with flags or similar high-visibility markings. The dedicated spotter must:

(I) Be equipped with a visual aid to assist in identifying the minimum clearance distance. Examples of a visual aid include: A clearly visible line painted on the ground; a clearly visible line on stanchions; a set of clearly visible line-of-sight landmarks (such as a fence post behind the dedicated spotter and a building corner ahead of the dedicated spotter).

(II) Be positioned to effectively gauge the clearance distance.

(III) Where necessary, use equipment that enables the dedicated spotter to communicate directly with the operator.

(IV) Give timely information to the operator so that the required clearance distance can be maintained.

Note: To be considered a dedicated spotter, the requirements of WAC 296-155-53302 (Signal person qualifications) must be met and his/her sole responsibility is to watch the separation between the power line and the equipment, the load line and load (including rigging and lifting accessories), and ensure through communication with the operator that the applicable minimum approach distance is not breached.

(C) A device that automatically warns the operator when to stop movement, such as a range control warning device. Such a device must be set to give the operator sufficient warning to prevent encroachment.

(D) A device that automatically limits range of movement, set to prevent encroachment.

(E) An insulating link/device, as defined in WAC 296-155-52902, installed at a point between the end of the load line (or below) and the load.

(v) The requirements of (b)(iv) of this subsection do not apply to work covered by chapter 296-45 WAC.

(c) Voltage information. Where Option (3) is used, the utility owner/operator of power lines must provide the requested voltage information prior to commencement of work or within two working days of the employer's request.

(d) Operations below power lines.

(i) No part of the crane/derrick, load line or load (including rigging and lifting accessories) is allowed below a power line unless the employer has confirmed that the utility owner/operator has deenergized and (at the worksite) visibly grounded the power line, except where one of the exceptions in (d)(ii) of this subsection apply.

(ii) Exceptions. (d)(i) of this subsection is inapplicable where the employer demonstrates that one of the following applies:

(A) The work is covered by chapter 296-45 WAC.

(B) For cranes/derricks with nonextensible booms: The uppermost part of the crane/derrick, with the boom at true vertical, would be more than twenty feet below the plane of a power line that is up to 350 kV, fifty feet below the plane of a power line that exceeds 350 kV or more than the Table 4 minimum clearance distance below the plane of the power line.

(C) For cranes with articulating or extensible booms: The uppermost part of the crane, with the boom in the fully extended position, at true vertical, would be more than twenty feet below the plane of a power line that is up to 350 kV, fifty feet below the plane of a power line that exceeds 350 kV or more than the Table 4 minimum clearance distance below the plane of the power line.

(D) The employer demonstrates that compliance with (d)(i) of this subsection is infeasible and meets the requirements of subsection (4) of this section.

(e) Power lines presumed energized. The employer must assume that all power lines are energized unless the utility owner/operator confirms that the power line has been and continues to be deenergized and visibly grounded at the worksite.

(f) Training.

(i) The employer must train each operator and crew member assigned to work with the crane/derrick on all the following:

(A) The procedures to be followed in the event of electrical contact with a power line. Such training must include:

(I) Information regarding the danger of electrocution from the operator simultaneously touching the crane/derrick and the ground.

(II) The importance to the operator's safety of remaining inside the cab except where there is an imminent danger of fire, explosion, or other emergency that necessitates leaving the cab.

(III) The safest means of evacuating from the crane/derrick that may be energized.

(IV) The danger of the potentially energized zone around the crane/derrick (step potential).

(V) The need for crew in the area to avoid approaching or touching the crane/derrick and the load.

(VI) Safe clearance distance from power lines.

(B) Power lines are presumed to be energized unless the utility owner/operator confirms that the power line has been and continues to be deenergized, and visibly grounded at the worksite.

(C) Power lines are presumed to be uninsulated unless the utility owner/operator or a registered engineer who is a qualified person with respect to electrical power transmission and distribution confirms that a power line is insulated.

(D) The limitations of an insulating link/device, proximity alarm, and range control (and similar) device, if used.

(E) The procedures to be followed to properly ground equipment and the limitations of grounding.

(ii) Employees working as dedicated spotters must be trained to enable them to effectively perform their task, including training on the applicable requirements of this section.

(iii) Training under this section must be administered in accordance with WAC 296-155-53409(2).

(g) Devices originally designed by the manufacturer for use as: A safety device (see WAC 296-155-53410), operational aid (see WAC 296-155-53412), or a means to prevent power line contact or electrocution, when used to comply with this section, must meet the manufacturer's procedures for use and conditions of use.

(3) Prior to working near a transmitter/communication tower where an electrical charge can be induced in the crane/derrick or materials being handled, the transmitter must be deenergized or the following precautions must be taken:

(a) The crane/derrick must be provided with an electrical ground directly to the crane/derrick frame;

(b) Ground jumper cables must be attached to materials being handled by boom equipment when electrical charge is induced while working near energized transmitters. Crews must be provided with nonconductive poles having large alligator clips or other similar protection to attach the ground cable to the load;

(c) Combustible and flammable materials must be removed from the immediate area prior to operations; and

(d) If tag lines are used, they must be nonconductive.

(4) Operation of the crane/derrick inside the Table 4 zone. Operations in which any part of the crane/derrick, load line or load (including rigging and lifting accessories) is either closer than the minimum approach distance under Table 4 of an energized power line or the power line voltage is undetermined and the crane/derrick load line or load is

within twenty feet from the power line is prohibited, except where the employer demonstrates that all of the following requirements are met:

(a) Notify the crane safety program within the department of labor and industries.

(b) The employer determines that it is infeasible to do the work without breaching the minimum approach distance under Table 4 of this section.

(c) The employer determines that, after consultation with the utility owner/operator, it is infeasible to deenergize and ground the power line or relocate the power line.

(d) Minimum clearance distance.

(i) The power line owner/operator or registered professional engineer who is a qualified person with respect to electrical power transmission and distribution determines the minimum clearance distance that must be maintained to prevent electrical contact in light of the on-site conditions. The factors that must be considered in making this determination include, but are not limited to: Conditions affecting atmospheric conductivity; time necessary to bring the crane/derrick, load line and load (including rigging and lifting accessories) to a complete stop; wind conditions; degree of sway in the power line; lighting conditions, and other conditions affecting the ability to prevent electrical contact.

(ii) Subsection (4)(d)(i) of this section does not apply to work covered by chapter 296-45 WAC; instead, for such work, the minimum clearance distances specified in chapter 296-45 WAC, Table 1 apply. Employers covered by chapter 296-45 WAC are permitted to work closer than the distances in chapter 296-45 WAC, Table 1, where both the requirements of this rule and WAC 296-45-375(10) are met.

(e) A planning meeting with the employer and utility owner/operator (or registered professional engineer who is a qualified person with respect to electrical power transmission and distribution) is held to determine the procedures that will be followed to prevent electrical contact and electrocution. At a minimum these procedures must include:

(i) If the power line is equipped with a device that automatically reenergizes the circuit in the event of a power line contact, before the work begins, the automatic reclosing feature of the circuit interrupting device must be made inoperative if the design of the device permits.

(ii) A dedicated spotter who is in continuous contact with the operator. The dedicated spotter must:

(A) Be equipped with a visual aid to assist in identifying the minimum clearance distance. Examples of a visual aid include, but are not limited to: A clearly visible line painted on the ground; a clearly visible line on stanchions; a set of clearly visible line-of-sight landmarks (such as a fence post behind the dedicated spotter and a building corner ahead of the dedicated spotter).

(B) Be positioned to effectively gauge the clearance distance.

(C) Where necessary, use equipment that enables the dedicated spotter to communicate directly with the operator.

(D) Give timely information to the operator so that the required clearance distance can be maintained.

Note: To be considered a dedicated spotter, the requirements of WAC 296-155-53302 (Signal person qualifications) must be met and his/her sole responsibility is to watch the separation between the power line and the equipment, the load line and load (including rigging and lifting accessories), and ensure through communication with the operator that the applicable minimum approach distance is not breached.

(iii) An elevated warning line, or barricade (not attached to the crane), in view of the operator (either directly or through video equipment), equipped with flags or similar high-visibility markings, to prevent electrical contact. However, this provision does not apply to work covered by chapter 296-45 WAC.

(iv) Insulating link/device.

(A) An insulating link/device installed at a point between the end of the load line (or below) and the load.

(B) For work covered by chapter 296-45 WAC, the requirement in (e)(iv)(A) of this subsection applies only when working inside the clearance distances of Table 1 in chapter 296-45 WAC.

(C) For work covered by chapter 296-45 WAC, electrical workers, involving operations where use of an insulating link/device is infeasible, the requirements of WAC 296-45-375 (10)(c)(ii) or (iii) may be substituted for the requirement in (e)(iv)(A) of this subsection.

(v) Until one year after the effective date of this part, the following procedure may be substituted for the requirement in (e)(iv)(A) of this subsection: All employees, excluding equipment operators located on the equipment, who may come in contact with the equipment, the load line, or the load must be insulated or guarded from the equipment, the load line, and the load. Insulating gloves rated for the voltage involved are adequate insulation for the purposes of this section.

(vi) Until three years after the effective date of this part the following procedure may be substituted for the requirement in (e)(iv)(A) of this subsection:

(A) The employer must use a link/device manufactured on or before one year after the effective date of this part that meets the definition of an insulating link/device, except that it has not been approved by a nationally recognized testing laboratory, and that is maintained and used in accordance with manufacturer requirements and recommendations, and is installed at a point between the end of the load line (or below) and the load; and

(B) All employees, excluding equipment operators located on the equipment, who may come in contact with the equipment, the load line, or the load must be insulated or guarded from the equipment, the load line, and the load through an additional means other than the device described in (e)(vi)(A) of this subsection. Insulating gloves rated for the voltage involved are adequate additional means of protection for the purposes of this section.

(vii) Use nonconductive rigging if the rigging may be within the Table 4 distance during the operation.

(viii) If the crane/derrick is equipped with a device that automatically limits range of movement, it must be used and set to prevent any part of the crane/derrick, load line or load (including rigging and lifting accessories) from breaching the minimum approach distance established under (d) of this subsection.

(ix) If a tag line is used, it must be of the nonconductive type.

(x) Barricades forming a perimeter at least ten feet away from the crane/derrick to prevent unauthorized personnel from entering the work area. In areas where obstacles prevent the barricade from being at least ten feet away, the barricade must be as far from the crane/derrick as feasible.

(xi) Workers other than the operator must be prohibited from touching the load line above the insulating link/device and crane. Operators remotely operating the equipment from the ground must use either wireless controls that isolate the operator from the equipment or insulating mats that insulate the operator from the ground.

(xii) Only personnel essential to the operation are permitted to be in the area of the crane and load.

(xiii) The crane/derrick must be properly grounded.

(xiv) Insulating line hose or cover-up must be installed by the utility owner/operator except where such devices are unavailable for the line voltages involved.

(f) The procedures developed to comply with (e) of this subsection are documented and immediately available on-site.

(g) The crane/derrick user and utility owner/operator (or registered professional engineer) meet with the operator and the other workers who will be in the area of the crane/derrick or load to review the procedures that will be implemented to prevent breaching the minimum approach distance established in (d) of this subsection and prevent electrocution.

(h) The procedures developed to comply with (e) of this subsection are implemented.

(i) The utility owner/operator (or registered professional engineer) and all employers of employees involved in the work must identify one person who will direct the implementation of the procedures. The person identified in accordance with this section must direct the implementation of the procedures and must have the authority to stop work at any time to ensure safety.

(j) If a problem occurs implementing the procedures being used to comply with (e) of this subsection, or indicating that those procedures are inadequate to prevent electrocution, the employer must safely stop operations and either develop new procedures to comply with (e) of this subsection or have the utility owner/operator deenergize and visibly ground or relocate the power line before resuming work.

(k) Devices originally designed by the manufacturer for use as: Safety devices (see WAC 296-155-53410), operational aids (see WAC 296-155-53412), or a means to prevent power line contact or electrocution, when used to comply with this section, must meet the manufacturer's procedures for use and conditions of use.

(l) The employer must train each operator and crew member assigned to work with the equipment in accordance with subsection (2)(f) of this section.

(5) Cranes while traveling.

(a) This section establishes procedures and criteria that must be met for cranes traveling under a power line on the construction site with no load. Equipment traveling on a construction site with a load is governed by subsections (2), (4), (6), and (7) of this section, whichever is appropriate, and WAC 296-155-53400(35).

(b) The employer must ensure that:

(i) The boom/mast and boom/mast support system are lowered sufficiently to meet the requirements of this section.

(ii) The clearances specified in Table 5 of this section are maintained.

(iii) The effects of speed and terrain on crane movement (including movement of the boom/mast) are considered so that those effects do not cause the minimum clearance distances specified in Table 5 of this section to be breached.

(iv) Dedicated spotter. If any part of the crane while traveling will get closer than twenty feet of the power line, the employer must ensure that a dedicated spotter who is in continuous contact with the driver/operator is used. The dedicated spotter must:

(A) Be positioned to effectively gauge the clearance distance.

(B) Where necessary, use equipment that enables the dedicated spotter to communicate directly with the operator.

(C) Give timely information to the operator so that the required clearance distance can be maintained.

Note: To be considered a dedicated spotter, the requirements of WAC 296-155-53302 (Signal person qualifications) must be met and his/her sole responsibility is to watch the separation between the power line and the equipment, the load line and load (including rigging and lifting accessories), and ensure through communication with the operator that the applicable minimum approach distance is not breached.

(v) Additional precautions for traveling in poor visibility. When traveling at night, or in conditions of poor visibility, in addition to the measures specified in (b)(i) through (iv) of this subsection, the employer must ensure that:

(A) The power lines are illuminated or another means of identifying the location of the lines must be used.

(B) A safe path of travel is identified and used.

(6) The requirements of subsections (1) and (2) of this section apply to power lines over 350 kV, and below 1000 kV except that wherever the distance "twenty feet" is specified, the distance "fifty feet" must be substituted.

(7) For power lines over 1000 kV, the minimum clearance distance must be established by the utility owner/operator or a registered professional engineer who is a qualified person with respect to power transmission and distribution.

Table 4—Minimum Clearance Distances

Voltage (nominal, kV)	Minimum clearance distance (feet)
up to 50	10
over 50 to 200	15
over 200 to 345	20
over 345 to 500	25
over 500 to 750	35
over 750 to 1,000	45
over 1,000	(as established by the utility owner/operator or registered professional engineer who is a qualified person with respect to electrical power transmission and distribution).

Note: The value that follows "to" is up to and includes that value.

Table 5—Minimum Clearance Distances While Traveling With No Load and Boom/Mast Lowered

Voltage (nominal, kV)	While traveling—Minimum clearance distance (feet)
up to 0.75	. . . . . 4 (while traveling/boom lowered)
over 0.75 to 50	. . . . . 6 (while traveling/boom lowered)
over 50 to 345	. . . . . 10 (while traveling/boom lowered)
over 345 to 750	. . . . . 16 (while traveling/boom lowered)
over 750 to 1,000	. . . . . 20 (while traveling/boom lowered)
over 1,000	. . . . . (as established by the utility owner/operator or registered professional engineer who is a qualified person with respect to electrical power transmission and distribution).

[Statutory Authority: RCW 49.17.010, 49.17.040, 49.17.050, 49.17.060 and chapter 49.17 RCW, and 29 C.F.R. 1926, Subpart CC. WSR 13-02-068, § 296-155-53408, filed 12/31/12, effective 2/1/13. Statutory Authority: RCW 49.17.010, 49.17.040, 49.17.050, 49.17.440, 49.17.060, and 29 C.F.R. 1926, Subpart CC. WSR 12-01-086, § 296-155-53408, filed 12/20/11, effective 2/1/12.]

WAC 296-155-53409 Training. (1) The employer must provide training as follows:

(a) Overhead power lines. The employer must ensure that each employee is trained in accordance with WAC 296-155-53408 (2)(g) and 296-155-53408 (4)(k) in the topics listed in WAC 296-155-53408 (2)(f).

(b) Qualified signal persons. The employer must ensure that each employee is trained who will be assigned to work as a signal person in accordance with the requirements of WAC 296-155-53302(3).

(c) Qualified rigger. The employer must ensure that each employee is trained who will be assigned to work as a rigger in accordance with the requirements of WAC 296-155-53306(3).

(d) Operators.

(i) Trainee/apprentice operator. The employer must ensure that each trainee/apprentice operator is trained in the areas addressed in WAC 296-155-53300 and 296-155-56420.

(ii) Operator. Operators who have met the requirements in WAC 296-155-53300 and 296-155-56420 will be considered trained.

(iii) For operators using equipment covered under this part that are exempt in WAC 296-155-52900 (3)(b), the employer must ensure that each operator is trained on the safe operation of the equipment the operator will be using.

(e) The employer must train each operator of the equipment covered by this part in the following practices:

(i) On friction equipment, whenever moving a boom off a support, first raise the boom a short distance (sufficient to take the load of the boom) to determine if the boom hoist brake needs to be adjusted. On other types of equipment with a boom, the same practice is applicable, except that typically there is no means of adjusting the brake; if the brake does not hold, a repair is necessary. See WAC 296-155-53400 (68) and (69).

(ii) Where available, the manufacturer's emergency procedures for halting unintended equipment movement.

(f) Competent persons and qualified persons. The employer must ensure that each competent person and each qualified person is trained regarding the requirements of this part applicable to their respective roles.

(g) Crush/pinch points. The employer must ensure that each employee is trained who works with the equipment to keep clear of holes, and crush/pinch points and the hazards addressed in WAC 296-155-53400(42) (work area control).

(h) Tag-out. The employer must ensure that each operator and each additional employee authorized to start/energize equipment or operate equipment controls (such as maintenance and repair employees) is trained, in the tag-out and start-up procedures in WAC 296-155-53400 (16) and (67).

(2) Training administration.

(a) The employer must evaluate each employee required to be trained under this part to confirm that the employee understands the information provided in the training.

(b) The employer must ensure that refresher training is provided in relevant topics for each employee when, based on the conduct of the employee or an evaluation of the employee's knowledge, there is an indication that retraining is necessary.

(c) Whenever the employer is required to provide training under this part, the employer must provide the training at no cost to the employee.

[Statutory Authority: RCW 49.17.010, 49.17.040, 49.17.050, 49.17.060 and chapter 49.17 RCW, and 29 C.F.R. 1926, Subpart CC. WSR 13-02-068, § 296-155-53409, filed 12/31/12, effective 2/1/13. Statutory Authority: RCW 49.17.010, 49.17.040, 49.17.050, 49.17.440, 49.17.060, and 29 C.F.R. 1926, Subpart CC. WSR 12-01-086, § 296-155-53409, filed 12/20/11, effective 2/1/12.]

WAC 296-155-53410 Safety devices. (1) Safety devices. The following safety devices are required on all cranes/derricks, except tower cranes and self-erecting tower cranes, covered by this part, unless otherwise specified. For requirements relating to operational aids and safety devices for tower cranes, see WAC 296-155-53900 (60) and (61), for self-erecting tower cranes see WAC 296-155-54100 (42) and (43).

(a) Crane level indicator.

(i) The crane must have a level indicator that is either built into the crane or is available on the crane.

(ii) If a built-in crane level indicator is not working properly, it must be tagged-out or removed. If a removable crane level indicator is not working properly, it must be removed.

(iii) This requirement does not apply to articulating cranes, portal cranes, derricks, floating cranes/derricks and land cranes/derricks on barges, pontoons, vessels or other means of flotation.

(b) Boom stops, except for derricks and hydraulic booms.

(c) Jib stops (if a jib is attached), except for derricks.

(d) Cranes with foot pedal brakes must have locks, except for portal cranes and floating cranes.

(e) Hydraulic outrigger jacks and hydraulic stabilizer jacks must have an integral holding device/check valve.

(f) Cranes on rails must have rail clamps and rail stops, except for portal cranes.

(g) Horn.

(i) The crane/derrick, as defined in ASME B30.5, must have a built-in horn or a removable horn that is available to the operator.

(ii) If a built-in horn is not working properly, it must be tagged-out or removed. If a removable horn is not working properly, it must be removed.

(2) Proper operation required. Operations must not begin unless the devices listed in this section are in proper working order. If a device stops working properly during operations, the operator must safely stop operations. If any of the devices listed in this section are not in proper working order, the equipment must be taken out of service and operations must not resume until the device is again working properly. Alternative measures are not permitted to be used.

[Statutory Authority: RCW 49.17.010, 49.17.040, 49.17.050, 49.17.440, 49.17.060, and 29 C.F.R. 1926, Subpart CC. WSR 12-01-086, § 296-155-53410, filed 12/20/11, effective 2/1/12.]

WAC 296-155-53412 Operational aids. (1) The devices listed in this section (listed operational aids) are required on all cranes/derricks, except tower cranes and self-erecting tower cranes, covered by this part, unless otherwise specified. For requirements relating to operational aids and safety devices for tower cranes, see WAC 296-155-53900 (60) and (61), for self-erecting tower cranes see WAC 296-155-54100 (42) and (43).

Notes: The requirements in subsection (3)(e), (f) and (g) of this section do not apply to articulating cranes.

The requirements in subsection (3)(d), (e) and (h) of this section only apply to those digger derricks manufactured after the effective date of this section.

(2) Operations must not begin unless the listed operational aids are in proper working order, except where an operational aid is being repaired the employer uses the specified temporary alternative measures. More protective alternative measures specified by the crane/derrick manufacturer, if any, must be followed.

(3) When operational aids are inoperative or malfunctioning, the crane and/or device manufacturer's recommendations for continued operation or shutdown of the crane must be followed until the problems are corrected. Without such recommendations and any prohibitions from the manufacturer against further operation, the following requirements apply:

Note: If a replacement part is no longer available, the use of a substitute device that performs the same type of function is permitted and is not considered a modification under WAC 296-155-53400 (58) and (59) (crane/derrick modifications).

(a) Recalibration or repair of the operational aid must be accomplished as soon as is reasonably possible, as determined by a qualified person.

(b) Boom hoist limiting device (except for derricks with base mounted drums).

(i) For cranes manufactured after December 16, 1969, a boom hoist limiting device is required. Temporary alternative measures: One or more of the following methods must be used:

(A) Use a boom angle indicator.

(B) Clearly mark the boom hoist rope (so that it can easily be seen by the operator) at a point that will give the operator sufficient time to stop the hoist to keep the boom within the minimum allowable radius. In addition, install mirrors or remote video cameras and displays if necessary for the operator to see the mark.

(C) Clearly mark the boom hoist rope (so that it can easily be seen by a spotter) at a point that will give the spotter sufficient time to signal the operator and have the operator stop the hoist to keep the boom within the minimum allowable radius.

(ii) If the crane was manufactured on or before December 16, 1969, and is not equipped with a boom hoist limiting device, at least one of the measures in (b)(i)(A) through (C) of this subsection must be used.

(c) Luffing jib limiting device. Cranes with a luffing jib must have a luffing jib limiting device. Temporary alternative measures are the same as in (b)(i) of this subsection, except to limit the movement of the luffing jib rather than the boom hoist.

(d) Anti two-blocking device. (This does not apply to dedicated pile drivers.)

(i) Telescopic boom cranes manufactured after February 28, 1992, must be equipped with a device which automatically prevents damage from contact between the load block, overhaul ball, or similar component, and the boom tip (or fixed upper block or similar component). The device(s) must prevent such damage at all points where two-blocking could occur.

(A) Temporary alternative measures: Clearly mark the hoist rope (so that it can easily be seen by the operator) at a point that will give the operator sufficient time to stop the hoist to prevent two-blocking; and

(B) Use a spotter when extending the boom.

(ii) Lattice boom cranes.

(A) Lattice boom cranes manufactured after February 28, 1992, must be equipped with a device that either automatically prevents damage and load failure from contact between the load block, overhaul ball, or similar component, and the boom tip (or fixed upper block or similar component), or warns the operator in time for the operator to prevent two-blocking. The device(s) must prevent such damage/failure or provide adequate warning for all points where two-blocking could occur.

(B) Lattice boom cranes, and derricks, manufactured after the effective date of this standard must be equipped with a device which automatically prevents damage and load failure from contact between the load block, overhaul ball, or similar component, and the boom tip (or fixed upper block or similar component). The device(s) must prevent such damage/failure at all points where two-blocking could occur.

Exception: The requirements in subsection (3)(d)(ii)(A) and (B) of this section do not apply to such lattice boom cranes when used for dragline, clamshell (grapple), magnet, drop ball (wrecking ball), container handling, concrete bucket, marine operations that do not involve hoisting personnel, and pile driving work.

(C) Temporary alternative measures: Clearly mark the hoist rope (so that it can easily be seen by the operator) at a point that will give the operator sufficient time to stop the hoist to prevent two-blocking, or use a spotter.

(iii) Articulating cranes manufactured after December 31, 1999, that are equipped with a load hoist must be

equipped with a device that automatically prevents damage from contact between the load block, overhaul ball, or similar component, and the boom tip (or fixed upper block or similar component). The device must prevent such damage at all points where two-blocking could occur. Temporary alternative measures: When two-blocking could only occur with movement of the load hoist, clearly mark the hoist rope (so that it can easily be seen by the operator) at a point that will give the operator sufficient time to stop the hoist to prevent two-blocking, or use a spotter. When two-blocking could occur without movement of the load hoist, clearly mark the hoist rope (so that it can easily be seen by the operator) at a point that will give the operator sufficient time to stop the hoist to prevent two-blocking, and use a spotter when extending the boom.

(e) Boom angle or radius indicator (except for derricks with base mounted drum hoists). The crane must have a boom angle or radius indicator readable from the operator's station. Temporary alternative measures: Radii or boom angle must be determined by measuring the radii or boom angle with a measuring device.

(f) Jib angle indicator if the crane has a luffing jib. Temporary alternative measures: Radii or jib angle must be determined by ascertaining the main boom angle and then measuring the radii or jib angle with a measuring device.

(g) Boom length indicator if the crane has a telescopic boom, except where the rated capacity is independent of the boom length. Temporary alternative measures: One or more of the following methods must be used:

(i) Mark the boom with measured marks to calculate boom length; or

(ii) Calculate boom length from boom angle and radius measurements; or

(iii) Measure the boom with a measuring device.

(h) Load weighing and similar devices (this also applies to dedicated pile drivers manufactured more than one year after the effective date of this section). Cranes (other than derricks and articulating cranes) manufactured after March 29, 2003, with a rated capacity over six thousand pounds must have at least one of the following: Load weighing device, load moment (or rated capacity) indicator, or load moment (or rated capacity) limiter.

(i) Temporary alternative measures: The weight of the load must be determined from a reliable source (such as the load's manufacturer), by a reliable calculation method (such as calculating a steel beam from measured dimensions and a known per foot weight), or by other equally reliable means. This information must be provided to the operator prior to the lift.

(ii) Articulating cranes manufactured after the effective date of this section must have at least one of the following: Automatic overload prevention device, load weighing device, load moment (or rated capacity) indicator, or load moment (rated capacity) limiter. Temporary alternative measures: The weight of the load must be determined from a source recognized by the industry (such as the load's manufacturer) or by a calculation method recognized by the industry (such as calculating a steel beam from measured dimensions and a known per foot weight). This information must be provided to the operator prior to the lift.

(i) Reserved.

(j) The following devices are required on cranes manufactured after the effective date of this section:

(i) Outrigger/stabilizer position (horizontal beam extension) sensor/monitor if the crane has outriggers or stabilizers. Temporary alternative measures: The operator must verify that the position of the outriggers or stabilizers is correct (in accordance with manufacturer procedures) before beginning operations requiring outrigger or stabilizer deployment.

(ii) Hoist drum rotation indicator if the crane/derrick has a hoist drum is not visible from the operator's station. Temporary alternative measures: Mark the drum to indicate the rotation of the drum. In addition, install mirrors or remote video cameras and displays if necessary for the operator to see the mark.

[Statutory Authority: RCW 49.17.010, 49.17.040, 49.17.050, 49.17.440, 49.17.060, and 29 C.F.R. 1926, Subpart CC. WSR 12-01-086, § 296-155-53412, filed 12/20/11, effective 2/1/12.]

WAC 296-155-53414 Cranes/derricks with a rated hoisting/lifting capacity of two thousand pounds or less. For cranes/derricks with a maximum manufacturer-rated hoisting/lifting capacity of two thousand pounds or less:

(1) The following sections apply: WAC 296-155-52900, Scope; WAC 296-155-52902, Definitions; WAC 296-155-53400 (34), (36) through (38), (45), (46), (59) and (67), General requirements; WAC 296-155-53404, Wire rope; WAC 296-155-53406, Signals; WAC 296-155-53408, Power line safety; WAC 296-155-53700(7), Mobile cranes—General; WAC 296-155-53715(5), Mobile cranes—Operations; WAC 296-155-539, Tower cranes; WAC 296-155-542, Overhead/bridge and gantry cranes; WAC 296-155-543, Derricks.

Note to subsection (1) of this section: Under subsection (2)(a) of this section, WAC 296-155-53402, (Assembly/disassembly) also apply.

(2) Assembly/disassembly.

(a) WAC 296-155-53402 (Assembly/disassembly) applies.

(b) Components and configuration. The employer must ensure that:

(i) The selection of components and the configuration of the crane/derrick which affects the capacity or safe operation of the crane/derrick complies with either the:

(A) Manufacturer instructions, recommendations, limitations, and specifications. When these documents and information are unavailable, a registered professional engineer familiar with the type of crane/derrick involved must approve, in writing, the selection and configuration of components; or

(B) Approved modifications that meet the requirements of WAC 296-155-53400 (58) and (59).

(ii) Post-assembly inspection. Upon completion of assembly, the crane/derrick is inspected to ensure that it is in compliance with subsection (2)(b)(i) of this section.

(c) Manufacturer prohibitions. The employer must comply with applicable manufacturer prohibitions.

(3) Operation - Procedures.

(a) The employer must comply with all manufacturer procedures applicable to the operational functions of the crane/derrick, including its use with attachments.

(b) Unavailable operation procedures. The employer must:

(i) Where the manufacturer procedures are unavailable, the employer must develop and ensure compliance with all procedures necessary for the safe operation of the crane/derrick and attachments.

(ii) Ensure that procedures for the operational controls are developed by a qualified person.

(iii) Ensure that procedures related to the capacity of the crane/derrick are developed and signed by a registered professional engineer.

(c) Accessibility. The employer must ensure that:

(i) The load chart must be available to the operator at the control station.

(ii) Procedures applicable to the operation of the crane/derrick, recommended operating speeds, special hazard warnings, instructions and operator's manual, are readily available for use by the operator.

(iii) Where rated capacities are available at the control station only in electronic form and failure occurs that makes the rated capacities inaccessible, the operator must immediately cease operations or follow safe shut-down procedures until the rated capacities (in electronic or other form) are available.

(4) Safety devices and operational aids.

(a) The employer must ensure that safety devices and operational aids that are part of the original equipment are maintained in accordance with manufacturer procedures.

(b) Anti two-blocking. The employer must ensure that cranes covered by this section manufactured after the effective date of this standard must have either an anti two-block device that meets the requirements of WAC 296-155-53412 (3)(d), or is designed so that, in the event of a two-block situation, no damage or load failure will occur (for example, by using a power unit that stalls in response to a two-block situation).

(5) Operator qualifications. The employer must train each operator, ensure that, prior to operating the crane/derrick, the operator is trained on the safe operation of the type of crane/derrick the operator will be using.

(6) Signal person qualifications. The employer must train each signal person, in the proper use of signals applicable to the use of the crane/derrick.

(7) Keeping clear of the load. WAC 296-155-53400(43) applies, except for WAC 296-155-53400 (43)(c)(iii) (qualified rigger).

(8) Inspections. The employer must ensure that the crane/derrick is inspected in accordance with manufacturer procedures.

(9) Hoisting personnel. The employer must ensure that equipment covered by this section is not used to hoist personnel.

(10) Design. The employer must ensure that the crane/derrick is designed by a qualified engineer.

[Statutory Authority: RCW 49.17.010, 49.17.040, 49.17.050, 49.17.440, 49.17.060, and 29 C.F.R. 1926, Subpart CC. WSR 12-01-086, § 296-155-53414, filed 12/20/11, effective 2/1/12.]

WAC 296-155-537 Mobile cranes.

[Statutory Authority: RCW 49.17.010, 49.17.040, 49.17.050, 49.17.440, 49.17.060, and 29 C.F.R. 1926, Subpart CC. WSR 12-01-086, § 296-155-537, filed 12/20/11, effective 2/1/12.]

WAC 296-155-53700 Mobile cranes—General. (1) All crawler or truck cranes (greater than two thousand pounds capacity) in use must meet the applicable requirements for design, construction, testing, inspection, maintenance, and operation as prescribed in the ASME B30.5-2007, Safety Standard for Mobile and Locomotive Cranes. It is not the intent of this rule to require retrofitting of existing cranes. However, when an item is being modified, its performance needs to be reviewed by a qualified person and compared to the applicable sections of this rule. For modification requirements see WAC 296-155-53400 (58) and (59). For cranes manufactured prior to the effective date of this rule the design, construction and testing criteria must meet at a minimum, ASME B30.5-1989.

(2) Mobile cranes must have boom stops to provide resistance from backward overturning. Such as:

- A fixed or telescoping bumper;
- A shock absorbing bumper;
- Hydraulic boom elevation cylinder(s).

(3) Restraints must be provided that will keep the jibs from backward overturning.

(4) Boom angle or radius indicators readable from the operator's station must be provided.

(5) A means must be provided that automatically stops the hoisting of the boom when the boom reaches a predetermined high angle. This can be either:

- A boom hoist disconnect;
- A shutoff;

or

- Hydraulic relief.

(6) A boom length indicator that is readable from the operator's station must be provided for telescopic booms, unless the load rating is independent of the boom length.

(7) Where the ground is soft or uneven, timber, planking, or other suitable material must be used to provide firm foundation and distribute the load.

(8) All welding procedures and welding operator qualifications must be in accordance with ANSI/AWS D14.3 when welding is to be performed on load-sustaining members.

[Statutory Authority: RCW 49.17.010, 49.17.040, 49.17.050, 49.17.440, 49.17.060, and 29 C.F.R. 1926, Subpart CC. WSR 12-01-086, § 296-155-53700, filed 12/20/11, effective 2/1/12.]

WAC 296-155-53715 Mobile cranes—Operations. (1) Where applicable, if the load hoist mechanism is not equipped with an automatic brake and the load must remain suspended for any considerable length of time, the operator must hold the drum from rotating in the lowering direction by activating a manually operated brake. The boom hoist brakes must be set, and on rope boom support cranes, a braking mechanism and a ratchet and pawl or other locking device must be engaged to prevent inadvertent lowering of the boom.

(2) On wheel-mounted cranes, loads must not be lifted over the front area, except as permitted by the crane manufacturer.

(3) Rolling outriggers. Mobile cranes using rolling outriggers must use load charts from the crane manufacturer or an RPE that specifically address this configuration. If the crane manufacturer does not address the use of rolling outrig-

gers while some of the crane's weight is on its wheels, then the user must use the "on rubber" chart.

(4) While in transit, the following additional precautions must be exercised:

(a) The boom should be carried in line with the direction of motion.

(b) The superstructure must be secured against rotation (or the boom placed in a boom rack mounted on the carrier), except when negotiating turns when there is an operator in the cab or the boom is supported on a dolly.

(5) A crane with or without a load must be traveled in the configuration recommended by the crane manufacturer. In the event a configuration is not specified, then travel must not be attempted with the boom so high that it may bounce back over the cab.

(6) When rotating the crane, sudden starts and stops must be avoided. Rotational speed must be such that the load does not swing out beyond the radius at which it can be controlled. A tag or restraint line must be used when rotation of the load is hazardous.

(7) Cranes must not be operated without the ballast or counterweight being in place as specified by the crane manufacturer. Under specific conditions, such as during crane assembly or unusual boom configurations, the crane manufacturer's recommendations for the amount of ballast or counterweight must be adhered to.

(8) The crane must be leveled per the crane manufacturer's recommendation; in the event that these recommendations are not available an RPE's recommendation must be followed.

[Statutory Authority: RCW 49.17.010, 49.17.040, 49.17.050, 49.17.440, 49.17.060, and 29 C.F.R. 1926, Subpart CC. WSR 12-01-086, § 296-155-53715, filed 12/20/11, effective 2/1/12.]

WAC 296-155-538 Articulating boom cranes.

[Statutory Authority: RCW 49.17.010, 49.17.040, 49.17.050, 49.17.440, 49.17.060, and 29 C.F.R. 1926, Subpart CC. WSR 12-01-086, § 296-155-538, filed 12/20/11, effective 2/1/12.]

WAC 296-155-53800 Articulating boom cranes—General. (1) All articulating boom cranes in use must meet the applicable requirements for design, inspection, construction, testing, maintenance and operation as prescribed in the ASME B30.22-2010, Safety Standard for Articulating Boom Cranes. It is not the intent of this rule to require retrofitting of existing cranes. However, when an item is being modified, its performance needs to be reviewed by a qualified person and compared to the applicable sections of this rule. For modification requirements see WAC 296-155-53400 (58) and (59). For cranes manufactured prior to the effective date of this rule the design and construction criteria must meet at a minimum, ASME B30.22-1987.

(2) All articulating boom cranes with a winch must have a two-blocking damage prevention feature.

(3) All welding and welding operator qualifications for load sustaining members must be in accordance with ANSI/AWS D14.3.

[Statutory Authority: RCW 49.17.010, 49.17.040, 49.17.050, 49.17.440, 49.17.060, and 29 C.F.R. 1926, Subpart CC. WSR 12-01-086, § 296-155-53800, filed 12/20/11, effective 2/1/12.]

WAC 296-155-53815 Articulating boom cranes—Operations. (1) The operator must not engage in any practice that diverts their attention while actually engaged in operating the crane.

(2) Stabilizers/outriggers must be visible to the operator or to a signal person during extension or setting.

(3) When the crane is equipped with stabilizers/outriggers, they must be extended and set per manufacturer's recommendations. When applicable, cribbing under the stabilizers/outriggers must meet the following requirements:

(a) Strong enough to prevent crushing;

(b) Of such thickness, width, and length as to completely support the pad.

(4) Crane supports for individual stabilizer/outrigger pads must be level to the manufacturer's specifications or those of a qualified person. Supports may be timbers, cribbing, or other structural members to distribute the load so as not to exceed the allowable bearing capacity of the underlying material.

(5) In transit the boom must be carried in stowed position, as recommended by the manufacturer.

(6) The crane must not travel with a load on the hook unless allowed by the manufacturer.

(7) Articulating boom cranes must not be used with suspended work platforms (baskets).

(8) The use of attached work platforms to the boom must be approved by the crane manufacturer.

Note: Requirements for personnel lifting are located in WAC 296-155-547.

[Statutory Authority: RCW 49.17.010, 49.17.040, 49.17.050, 49.17.440, 49.17.060, and 29 C.F.R. 1926, Subpart CC. WSR 12-01-086, § 296-155-53815, filed 12/20/11, effective 2/1/12.]

WAC 296-155-539 Tower cranes.

[Statutory Authority: RCW 49.17.010, 49.17.040, 49.17.050, 49.17.440, 49.17.060, and 29 C.F.R. 1926, Subpart CC. WSR 12-01-086, § 296-155-539, filed 12/20/11, effective 2/1/12.]

WAC 296-155-53900 Tower cranes—General. (1) This section contains supplemental requirements for tower cranes; all sections of this part apply to tower cranes unless specified otherwise. In addition, the requirements in WAC 296-155-53402 apply unless otherwise specified, except that the term "assembly/disassembly" is replaced by "erecting, climbing and dismantling," and the term "disassembly" is replaced by "dismantling."

(2) All tower cranes in use must meet the applicable requirements for design, construction, installation, testing, maintenance, inspection, and operation as prescribed by the manufacturer. If the manufacturer's recommendations are not available, follow the requirements in ASME B30.3-2009. It is not the intent of this rule to require retrofitting of existing cranes. However, when an item is being modified, its performance needs to be reviewed by a qualified person and compared to the applicable sections of this rule. For modification requirements see WAC 296-155-53400 (58) and (59). For cranes manufactured prior to the effective date of this rule the design and construction criteria must meet at a minimum, ASME B30.3-1990.

(3) The manufacturer's recommendations must be followed when installing, erecting, and dismantling tower

cranes. If the manufacturer's recommendations are not available, follow the requirements in ASME B30.3-2009.

(4) When cranes are erected/dismantled, written instructions by the manufacturer or qualified person and a list of the weights of each subassembly to be erected/dismantled must be at the site.

(5) A qualified person must supervise the erection, jumping and dismantling of the crane.

(6) Procedures must be established before beginning crane erection/dismantling work to implement the instructions and adapt them to the particular needs of the site.

(7) Tower cranes and tower crane assembly parts/components must be inspected by an accredited certifier, prior to assembly, following erection of the tower crane, after each climbing operation, or reconfiguring the boom, jib, or counterjib, before placing the crane in service. (See WAC 296-155-53206.) Only inspected and preapproved components must be used in the assembly of a tower crane.

(8) Tower masts must be erected plumb to a tolerance of 1:500 (approximately one inch in forty feet) unless the manufacturer specifies otherwise and verified by a qualified person.

(9) Cranes that are required to weathervane when out-of-service must be installed with clearance for the boom (jib) and the superstructure to swing through a full three hundred sixty degree arc. Clearances recommended by the crane manufacturer must be maintained between other weathervaning cranes and fixed objects.

(10) When the crane is out of operation, the jib or boom must be pointed downwind and the slewing brake must be released so as to permit the jib or boom to weathervane, provided the jib or boom has a clear three hundred sixty degree rotation.

(11) When the crane is out of operation and a three hundred sixty degree rotation is not feasible, the employer must follow the manufacturer's or RPE's written procedures for restraining the jib or boom from rotation.

(12) Foundations and structural supports. Tower crane foundations and structural supports (including both the portions of the structure used for support and the means of attachment) must be designed by the manufacturer or a registered professional engineer.

(13) Prior to erecting a tower crane on a nonstandard tower crane base/structural support, the employer must ensure that the engineering configuration of this base/structural support has been reviewed and acknowledged as acceptable by an independent registered professional structural engineer (RPSE), licensed under chapter 18.43 RCW.

(14) An RPSE must certify that the crane foundation, structural supports and underlying soil provide adequate support for the tower crane with its applied torsional and overturning moments and the horizontal and vertical forces.

(15) The controlling entity that installed the tower crane foundations and structural supports must provide a written statement/documentation to the A/D director stating that they were installed in accordance with their design and requirements the RPE, and the engineer of record if applicable.

(16) The engineer of record must be consulted to verify that the host structure is capable of safely resisting the applied crane forces, if this engineer is not available an RSPE must perform this verification. When inside climbing cranes are used, the integrity of the host structure must be reviewed and approved by an RPSE, for the effects of the crane, load, and wind forces at each level of the structure.

(17) Prior to installing a tower crane that will be attached to an existing building, new construction, or structure, an RPSE must certify that the structural attachment to the building is designed to withstand the torsional and overturning moments and the horizontal and vertical forces created by the crane to be installed.

(18) The assembly/disassembly director must address backward stability before slewing, traveling or freestanding tower cranes on ballasted bases.

(19) The top of the support/foundation must be accessible and free of debris, materials and standing water. No materials can be stored on the support unless approved by a qualified person. Tower crane's foundation and fasteners must remain accessible and visible for inspection at all times.

(20) Tower cranes must not be climbed in concrete structures until the concrete at the levels at which horizontal and vertical supports are to be placed has reached sufficient strength to resist the crane reactions. It may be necessary to test concrete cylinders or cores or to use on-site testing techniques for this purpose.

(21) Climbing jack systems used for raising a tower crane must be equipped with over-pressure relief valves, direct-reading pressure gauges, and pilot-operated hydraulic check valves installed in a manner which will prevent the jack from retracting should a hydraulic line or fitting rupture or fail.

(22) Before climbing or erecting/dismantling, cranes must be balanced in accordance with the manufacturer's or a qualified person's instructions. If no such limit has been set, wind velocity must not exceed the limit set by the manufacturer, or twenty miles per hour as indicated by a wind velocity device mounted near the top of the crane. The crane operator must be present during climbing or erecting/dismantling operations.

(23) Climbing operations must not be commenced until all crane support provisions at the new support level are in place as per the manufacturer's recommendations or as specified by an RPSE.

(24) Crane superstructures and counterjibs (counterweight jib) must be arranged to receive counterweights, made in accordance with the manufacturer's specifications for the specified jib or boom length, and to hold them in position. Means must be provided to guard against shifting or dislodgement during crane operation. Manufacturer's specified counterweight weights are not to be exceeded.

(25) Moveable counterweights, if provided, must either move automatically or must be equipped with a position indicator with read out at the operator's station(s).

(26) When counterweight position is controlled by wire ropes, means must be provided to prevent uncontrolled movement in the event of wire rope or wire rope termination failure.

(27) When counterweight position is controlled by wire ropes and/or linkages between the counterweight and the boom, provision must be made to avert structural damage if the boom is moved beyond its normal limits.

(28) For cranes utilizing ballast, bases must include provisions to support and position the ballast. Means must be

provided to guard against shifting or dislodgement of ballast during crane operation.

(29) All electrical equipment must be properly grounded and protection must be provided against lightning per the manufacturer's recommendation or if not available, a registered professional electrical engineer.

(30) Each electrically powered crane must have a main disconnect switch at or near the initial base of the crane. This switch must have provisions for locking in the "off" position.

(31) Electrical equipment must be so located or guarded that live parts are not exposed to inadvertent contact by personnel and equipment under normal operating conditions.

(32) Electrical equipment must be protected from dirt, grease, oil, and moisture. Fixtures, wiring, and connections exposed to the weather must be of weather resistant type.

(33) Wiring must conform to the provisions of ANSI/NFPA 70 for temporary wiring. Motors, controls, switches, and other electrical equipment must meet the applicable requirements of ANSI/NFPA 70. Hoists, slewing, trolley, and travel controllers must conform to ISO 7752-1, 2010.

(34) Provisions must be made to guard against reversing of each motor due to reversed phase connections.

(35) Electrical circuits between the fixed and rotating portions of the crane must pass through a slip ring assembly that will permit continuous rotation of the upper crane structure in either direction, unless other means are provided to prevent damage to the electrical conductors.

(36) Individual overload protection must be provided for each motor.

(37) Crane trucks must be fitted with sweeps extending below the top of the rail, unless the construction of the rail foundation prohibits such extension, and placed in front of the leading wheels in either direction. Truck wheels/bogies must be guarded.

(38) A means must be provided to limit the drop of truck frames in case of wheel or axle breakage to a distance that will not cause a crane to overturn.

(39) Multiple tower crane job sites. On job sites where more than one tower crane is installed, the cranes must be located such that no crane may come in contact with the structure of another crane. Crane's jibs or booms are permitted to pass over one another.

(40) Tower cranes, in service, must be positioned whereby they can slew three hundred sixty degrees without either the counterjib or jib/boom striking any building, structure, or other object, unless:

(a) Suitable anticollision devices are installed which will prohibit contact with such objects or;

(b) Direct voice communications are established between any operator of the tower crane(s) involved and a signal person so stationed where the boom and/or counterweight movement, and the object with which it may contact can be observed so that the operator(s) can be warned of imminent danger.

(i) A secondary means of positive communications must be established as a back-up for possible direct voice communication failure.

(ii) Radio communication systems without tone coded squelch are prohibited. Citizens band radios must not be used as a means of communications for tower cranes.

(41) Limit switches must be installed and must be kept properly adjusted. They must be protected or isolated in a manner which will prevent unauthorized tampering. Limit switches must provide the following functions:

(a) Limit the travel of the trolley to prevent it from hitting the outer end of the jib.

(b) Limit the upward travel of the load block to prevent two-blocking.

(c) Lower over travel limiting devices must be provided for all load hoists where the hook area is not visible to the operator.

(d) In the absence of the crane manufacturer's specifications, limit the load being lifted in a manner whereby no more than one hundred ten percent of the maximum rated load can be lifted or moved.

(e) Cranes mounted on rail tracks must be equipped with limit switches limiting the travel of the crane on the track and stops or buffers at each end of the tracks.

(42) All tower cranes manufactured after July 27, 2010, must be equipped with a safety device (also referred to as a limit device) that provides deceleration before the top position of the crane hook is reached.

(43) The load must be free when lifted; it must not be caught on nor attached to other objects. Side loading of jibs must be limited to freely suspended loads. Cranes must not be used for dragging loads.

(44) When the operator may be exposed to the hazard of falling objects, the tower crane cab and/or remote control station must have adequate overhead protection.

(45) A safe means must be provided for access to the tower, operator's cab and machinery platform.

(46) When necessary for inspection or maintenance purposes, ladders, walkways with railing or other devices must be provided.

(47) All crane brakes must automatically set in event of power failure. Slewing brakes must also function in this manner or be capable of being set manually.

(48) Each tower crane must be provided with a slewing brake capable of holding in both directions preventing the superstructure from rotating during operation and must be capable of being set in the holding position and remaining so without further action on the part of the operator.

(49) The trolley must be provided with an operating brake capable of stopping the trolley in either direction. The system must include a means for holding the trolley without further action on the part of the operator, and must engage automatically if power or pressure to the brake is lost.

(50) In addition to the operating brake, the trolley must be equipped with an automatic braking device capable of stopping trolley in either direction in the event of trolley drive rope breakage, if such ropes are used.

(51) The body or frame of the trolley must be fitted with a means to restrain the trolley from becoming detached from its guide rail(s) in the event of trolley wheel or axle breakage or side loading.

(52) The jib point sheave, if provided, must have at least one broad stripe of bright, contrasting color painted on each side so it can be determined whether or not the sheave is turning.

(53) Employees required to perform duties on the boom/jib of tower cranes must be protected against falling in accordance with Part C-1 of this chapter.

(54) An audible signal must automatically sound whenever the crane travels in order to warn persons in the vicinity.

(55) A wind velocity indicating device must be mounted at or near the top of the crane. A velocity readout must be provided at the operator's station in the cab, and a visible or audible alarm must be triggered in the cab and at remote control stations when a preset wind velocity has been exceeded.

(56) When the wind velocity indicating device is not functioning, crane operations may continue if another crane on the site is equipped with a functioning wind velocity indicator or if a qualified person determines that ambient wind velocity is within permitted limits.

(57) Indicating devices must be provided to:

(a) Display the magnitude of the load on the hook;

(b) Display the boom angle or operating radius, as appropriate. On hammerhead booms (jibs), radius indication may be by means of flags or markers along the length of the boom (jib) so as to be visible to the operator;

(c) Display ambient wind velocity.

(58) Limiting devices must be provided to:

(a) Decelerate the trolley travel at both ends of the jib prior to the final limit activation;

(b) Decelerate the luffing boom travel at upper and lower ends prior to final limit activation;

(c) Limit trolley travel at both ends of the jib;

(d) Stop boom luffing at lower and upper limits of boom movement;

(e) Decelerate the hoist up hook travel prior to final limit activation;

(f) Stop load block upper motion before two-blocking occurs;

(g) Stop load block downward motion to prevent the last two wraps of wire rope from spooling off the hoist drum;

(h) Limit crane travel at both ends of the runway tracks;

(i) Limit lifted load;

(j) Limit operating radius in accordance with lifted load, i.e., limit movement; and

(k) Limit pressures in hydraulic or pneumatic circuits.

(59) Load limiting devices and acceleration/deceleration limiters must be locked or sealed when provided with a method to inhibit tampering and unauthorized adjustment.

(60) Safety devices.

(a) The following safety devices are required on all tower cranes unless otherwise specified:

(i) Boom stops on luffing boom type tower cranes;

(ii) Jib stops on luffing boom type tower cranes if equipped with a jib attachment;

(iii) Travel rail end stops at both ends of travel rail;

(iv) Travel rail clamps on all travel bogies;

(v) Integrally mounted check valves on all load supporting hydraulic cylinders;

(vi) Hydraulic system pressure limiting device;

(vii) The following brakes, which must automatically set in the event of pressure loss or power failure, are required:

(A) A hoist brake on all hoists;

(B) Slewing brake;

(C) Trolley brake;

(D) Rail travel brake.

(viii) Deadman control or forced neutral return control (hand) levers;

(ix) Emergency stop switch at the operator's station;

(x) Trolley end stops must be provided at both ends of travel of the trolley.

(b) Proper operation required. Operations must not begin unless the devices listed in this subsection are in proper working order. If a device stops working properly during operations, the operator must safely stop operations. The crane must be taken out of service, and operations must not resume until the device is again working properly. Alternative measures are not permitted to be used.

(61) Operational aids.

(a) The devices listed in this subsection (operational aids) are required on all tower cranes covered by this part, unless otherwise specified.

(b) Crane operations must not begin unless the operational aids are in proper working order, except where the employer meets the specified temporary alternative measures. More protective alternative measures specified by the tower crane manufacturer, if any, must be followed.

(c) When operational aids are inoperative or malfunctioning, the crane and/or device manufacturer's recommendations for operation or shutdown of the crane must be followed until the problems are corrected. Without such recommendations and any prohibitions from the manufacturer against further operation, the following requirements apply:

Note: If a replacement part is no longer available, the use of a substitute device that performs the same type of function is permitted and is not considered a modification under WAC 296-155-53400 (58) and (59).

(i) Recalibration or repair of the operational aid must be accomplished as soon as is reasonably possible, as determined by a qualified person.

(ii) Trolley travel limiting device. The travel of the trolley must be restricted at both ends of the jib by a trolley travel limiting device to prevent the trolley from running into the trolley end stops. Temporary alternative measures:

(A) Option A. The trolley rope must be marked (so it can be seen by the operator) at a point that will give the operator sufficient time to stop the trolley prior to the end stops.

(B) Option B. A spotter who is in direct communication with the operator must be used when operations are conducted within ten feet of the outer or inner trolley end stops.

(iii) Boom hoist limiting device. The range of the boom must be limited at the minimum and maximum radius. Temporary alternative measures: Clearly mark the hoist rope (so it can be seen by the operator) at a point that will give the operator sufficient time to stop the boom hoist within the minimum and maximum boom radius, or use a spotter who is in direct communication with the operator to inform the operator when this point is reached.

(iv) Anti two-blocking device. The tower crane must be equipped with a device which automatically prevents damage from contact between the load block, overhaul ball, or similar component, and the boom tip (or fixed upper block or similar component). The device(s) must prevent such damage at all points where two-blocking could occur. Temporary alternative measures: Clearly mark the hoist rope (so it can be seen by the operator) at a point that will give the operator sufficient time to stop the hoist to prevent two-blocking, or use a

spotter who is in direct communication with the operator to inform the operator when this point is reached.

Note: This temporary alternative measure cannot be used if lifting personnel in a suspended platform.

(v) Hoist drum lower limiting device. Tower cranes manufactured after the effective date of this section must be equipped with a device that prevents the last two wraps of hoist cable from being spooled off the drum. Temporary alternative measures: Mark the hoist rope (so it can be seen by the operator) at a point that will give the operator sufficient time to stop the hoist prior to last two wraps of hoist cable being spooled off the drum, or use a spotter who is in direct communication with the operator to inform the operator when this point is reached.

(vi) Load moment limiting device. The tower crane must have a device that prevents moment overloading. Temporary alternative measures: A radius indicating device must be used (if the tower crane is not equipped with a radius indicating device, the radius must be measured to ensure the load is within the rated capacity of the crane). In addition, the weight of the load must be determined from a reliable source (such as the load's manufacturer), by a reliable calculation method (such as calculating a steel beam from measured dimensions and a known per foot weight), or by other equally reliable means. This information must be provided to the operator prior to the lift.

(vii) Hoist line pull limiting device. The capacity of the hoist must be limited to prevent overloading, including each individual gear ratio if equipped with a multiple speed hoist transmission. Temporary alternative measures: The operator must ensure that the weight of the load does not exceed the capacity of the hoist (including for each individual gear ratio if equipped with a multiple speed hoist transmission).

(viii) Rail travel limiting device. The travel distance in each direction must be limited to prevent the travel bogies from running into the end stops or buffers. Temporary alternative measures: A spotter who is in direct communication with the operator must be used when operations are conducted within ten feet of either end of the travel rail end stops; the spotter must inform the operator of the distance of the travel bogies from the end stops or buffers.

(ix) Boom hoist drum positive locking device and control. The boom hoist drum must be equipped with a control that will enable the operator to positively lock the boom hoist drum from the cab. Temporary alternative measures: The device must be manually set when required if an electric, hydraulic or automatic type is not functioning.

(x) Boom angle or hook radius indicator.

(A) Luffing boom tower cranes must have a boom angle indicator readable from the operator's station.

(B) Hammerhead tower cranes manufactured after the effective date of this section must have a hook radius indicator readable from the operator's station. Temporary alternative measures: Hook radii or boom angle must be determined by measuring the hook radii or boom angle with a measuring device.

(xi) Trolley travel deceleration device. The trolley speed must be automatically reduced prior to the trolley reaching the end limit in both directions. Temporary alternative measures: The employer must post a notice in the cab of the crane notifying the operator that the trolley travel deceleration device is malfunctioning and instructing the operator to take special care to reduce the trolley speed when approaching the trolley end limits.

(xii) Boom hoist deceleration device. The boom speed must be automatically reduced prior to the boom reaching the minimum or maximum radius limit. Temporary alternative measures: The employer must post a notice in the cab of the crane notifying the operator that the boom hoist deceleration device is malfunctioning and instructing the operator to take special care to reduce the boom speed when approaching the boom maximum or minimum end limits.

(xiii) Load hoist deceleration device. The load speed must be automatically reduced prior to the hoist reaching the upper limit. Temporary alternative measures: The employer must post a notice in the cab of the crane notifying the operator that the load hoist deceleration device is malfunctioning and instructing the operator to take special care to reduce the hoist speed when approaching the upper limit.

(xiv) Wind speed indicator. A device must be provided to display the wind speed and must be mounted at or near the top of the crane structure. Temporary alternative measures: Use of wind speed information from a properly functioning indicating device on another tower crane on the same site, or a qualified person estimates the wind speed.

(xv) Load indicating device. Cranes manufactured after the effective date of this section, must have a device that displays the magnitude of the load on the hook. Displays that are part of load moment limiting devices that display the load on the hook meet this requirement. Temporary alternative measures: The weight of the load must be determined from a reliable source (such as the load's manufacturer), by a reliable calculation method (such as calculating a steel beam from measured dimensions and a known per foot weight), or by other equally reliable means. This information must be provided to the operator prior to the lift.

(62) Advertising signs or similar panels must not be installed on the crane or tower unless size, design, and positioning satisfy the manufacturer's recommendations, in the absence of the manufacturer's recommendations, an RPE's written approval must be obtained.

(63) For night operations, lighting must be adequate to illuminate the working areas while not interfering with the operator's vision.

(64) All welding procedures and welding operator qualifications for use in repair or alteration of load sustaining members must be in accordance with ANSI/AWS D14.3 or ANSI/AWS D1.1. Where special steels or other materials are used, the manufacturer or a qualified person must provide welding procedure instructions. The type of metal used for load sustaining members must be identified by the manufacturer. In the absence of the manufacturer an RPSE must be used.

[Statutory Authority: RCW 49.17.010, 49.17.040, 49.17.050, 49.17.440, 49.17.060, and 29 C.F.R. 1926, Subpart CC. WSR 12-01-086, § 296-155-53900, filed 12/20/11, effective 2/1/12.]

WAC 296-155-53905 Tower cranes—Additional inspection criteria. (1) In addition to the requirements in WAC 296-155-53405, the following additional items must be included:

(a) Tower (mast) bolts and other structural bolts (for loose or dislodged condition) from the base of the tower crane up or, if the crane is tied to or braced by the structure, those above the upper-most brace support.

(b) The upper-most tie-in, braces, floor supports and floor wedges where the tower crane is supported by the structure, for loose or dislodged components.

(2) Annual. In addition to the items that must be inspected under WAC 296-155-53405(5), all turntable and tower bolts must be inspected for proper condition and torque.

[Statutory Authority: RCW 49.17.010, 49.17.040, 49.17.050, 49.17.440, 49.17.060, and 29 C.F.R. 1926, Subpart CC. WSR 12-01-086, § 296-155-53905, filed 12/20/11, effective 2/1/12.]

WAC 296-155-53915 Tower cranes—Operations. (1) The operator must not engage in any practice that diverts their attention while actually engaged in operating the crane.

(2) The operator must do the following before leaving the crane unattended:

(a) Set down the load, rigging gear, bucket, lifting magnet, or other devices.

(b) Position trolley in accordance with the manufacturer's recommendations unless the site specific application drawing requires a different position.

(c) Leave the superstructure free to weathervane unless provisions for nonweathervaning have been specified by the manufacturer or by a qualified person.

(d) Disconnect power to operating controls or disengage the master clutch, as applicable.

(e) Place all controls in the "off" or "neutral" position.

(f) Secure the crane against accidental travel.

(g) Stop the internal combustion engine, when provided.

Exemption: If crane operation is frequently interrupted during a shift, the crane may remain running while the operator remains on the crane superstructure.

(h) Restrain the crane from travel with rail clamps, or other means provided, when a wind alarm is given or on leaving the crane overnight.

Note: Additional information relating to cranes being unattended are located in WAC 296-155-53400(52) of this part.

(3) If power fails during operation, the operator must:

(a) Set trolley, hoist, and travel brakes and locking devices, as applicable;

(b) Move all clutch or other power controls to the "off" or "neutral" position;

(c) If practical, the suspended load must be landed under brake control.

(4) Cranes must not be climbed to a new operating level nor operated when wind speeds exceed the maximum velocity recommended by the manufacturer. Where the manufacturer does not specify this information, an RPE must determine the maximum allowable wind velocity. Climbing operations are not allowed until tie-ins at the new support level as specified by a qualified person are in place.

(5) Prior to daily operation, operator aids must be checked to determine if they are working properly as required in WAC 296-155-53405 and 296-155-53905.

(6) During adverse weather conditions which reduce visibility, operations must be performed according to the manufacturer's specifications, when not available in accordance with an RPE's written instructions.

(7) The load must not be lowered below the point where less than two full wraps of rope remain on the drum.

(8) When slewing the boom (jib), trolleying a load, or traveling the crane, sudden starts and stops must be avoided. Slew and travel speeds must be such that the load does not swing out beyond the radius at which it can be controlled. A tag or restraint line must be used when swinging of the load is hazardous.

(9) Cranes must not be operated without the ballast or counterweight in place as specified by the manufacturer. Under specific conditions, such as during crane assembly or disassembly, the manufacturer's recommendations for the amount of partial ballast or counterweight must be adhered to. The maximum ballast or counterweight approved by the manufacturer or an RPE for use on a given crane must not be exceeded.

[Statutory Authority: RCW 49.17.010, 49.17.040, 49.17.050, 49.17.440, 49.17.060, and 29 C.F.R. 1926, Subpart CC. WSR 12-01-086, § 296-155-53915, filed 12/20/11, effective 2/1/12.]

WAC 296-155-541 Self-erecting tower cranes.

[Statutory Authority: RCW 49.17.010, 49.17.040, 49.17.050, 49.17.440, 49.17.060, and 29 C.F.R. 1926, Subpart CC. WSR 12-01-086, § 296-155-541, filed 12/20/11, effective 2/1/12.]

WAC 296-155-54100 Self-erecting tower cranes—General. (1) All self-erecting tower cranes in use must meet the applicable requirements for design, construction, installation, testing, maintenance, inspection, and operation as prescribed by the manufacturer. For modification requirements see WAC 296-155-53400 (58) and (59).

(2) In addition to the requirements in WAC 296-155-53402(6), employees must not be in or under the tower, jib, or rotating portion of the crane during erecting, climbing and dismantling operations until the crane is secured in a locked position and the competent person in charge indicates it is safe to enter this area, unless the manufacturer's instructions direct otherwise and only the necessary personnel are permitted in this area.

(3) When cranes are erected, reconfigured, or dismantled, written instructions by the manufacturer must be followed. If circumstances do not permit the normal manufacturer's written instructions from being followed, alternative written instructions from the manufacturer or an RPE must be followed.

(4) Erection, reconfiguration, and dismantling must be performed under the supervision of a qualified person.

(5) The area in which a crane is to be set up must be carefully assessed to ensure that it is suitable before the crane is taken to site and put into service. The area chosen must be of a sufficient size to enable the crane to be maneuvered into position, set up, operated and dismantled, with sufficient clearances between the crane and surrounding structures, as detailed by application drawings and in the manufacturer's operation and instruction manual.

(6) When setting up a crane, care must be taken to ensure that the crane will not contact or approach overhead hazards such as power lines, communications cables or overhead structures.

(7) The assembly/disassembly director must address backward stability before slewing self-erecting tower cranes.

(8) Crane supports for individual outrigger pads must be level to the manufacturer's specifications or those of a qualified person. Supports may be timbers, cribbing, or other structural members to distribute the load so as not to exceed the allowable bearing capacity of the underlying material.

(9) All load bearing foundations, supports, and rail tracks must be constructed or installed to support the crane loads and to transmit them to the soil or other support medium. In addition to supporting vertical load, foundations and supports, rail supports excepted, must be designed to provide a moment resisting overturning equal to a minimum of one hundred fifty percent of the maximum crane overturning moment. This requirement may be met by means of structural anchors or ballast weights.

(10) In addition to the requirements in WAC 296-155-53400 (36) and (37), a qualified person must ensure that the underlying soil is adequate support for the crane with its maximum forces recommended by the manufacturer.

(11) Cranes required to weathervane when out-of-service must be installed with clearance for jib and superstructure to slew a full three hundred sixty degree arc unobstructed without encroaching any power line "Danger-Swing/Crush Zone." Clearances recommended by the crane manufacturer must be maintained between weathervaning cranes, fixed objects and other cranes.

(12) When the crane is out of operation and a three hundred sixty degree rotation is not provided, follow the manufacturer's or RPE's written procedures.

(13) Advertising signs or similar panels must not be installed on the crane or tower unless size, design, and positioning satisfy the manufacturer's recommendations. In the absence of the manufacturer's recommendations, an RPE's written approval must be obtained.

(14) Prior to installing a self-erecting tower crane on a building or structure the engineer of record must be consulted to verify that the host structure is capable of safely resisting the applied crane forces, if this engineer is not available an RSPE must perform this verification.

(15) When cranes are erected and after each reconfiguration, before placing the crane in service, all functional motions, motion limiting devices, brakes, and indicating devices must be tested for operation.

(a) The order in which tests of a newly erected or reconfigured crane are to be performed is as follows:

(i) Functional motion tests without load. Each test must include:

(A) Load hoisting and lowering;

(B) Jib elevating and lowering, or traversing the trolley;

(C) Slew motion;

(D) Brakes and clutches;

(E) Operational aids and motion limiting devices;

(F) Remote control, if provided.

(ii) Functional load tests at rated load. Each test must include:

(A) Load hoisting and lowering;

(B) Jib elevating and lowering, or traversing the trolley;

(C) Slew motion;

(D) Brakes and clutches;

(E) Operational aids and load limiting devices;

(F) Remote control, if provided.

(b) During the test, the crane supports must be checked. Any observed displacement is reason to suspend testing until an evaluation is made by a qualified person.

(16) Conditions that adversely affect the crane at the time of erection, reconfiguration, or dismantling must be a limiting factor that could require suspending the operation. These conditions include but are not limited to:

(a) Support conditions;

(b) Wind velocity or gusting winds;

(c) Heavy rain;

(d) Fog;

(e) Extreme cold or heat;

(f) Ice;

(g) Artificial lighting.

(17) For night operations, lighting must be adequate to illuminate the working areas while not interfering with the operator's vision.

(18) For cranes utilizing ballast, bases must include provisions to support and position the ballast. Means must be provided to guard against shifting or dislodgement during crane operation.

(19) Superstructures must be arranged to receive counterweights, made in accordance with the crane manufacturer's specifications, and to hold them in position. Means must be provided to guard against shifting or dislodgement during crane operation.

(20) Counterweights must be securely fastened in place and must be at the location and within the weight tolerance as recommended by the manufacturer.

(21) Limiting devices must be provided to:

(a) Decelerate the trolley and hoist hook prior to activating the motion stop limit;

(b) Limit trolley travel at both ends of the jib;

(c) Limit jib telescoping at inner and outer position;

(d) Stop load block upward motion before two-blocking occurs;

(e) Stop load block downward motion to prevent the last two wraps of wire rope from spooling off the hoist drum;

(f) Limit crane travel at both ends of the runway tracks;

(g) Limit lifted load;

(h) Limit operating radius in accordance with lifted load, i.e., limit moment; and

(i) Limit pressures in hydraulic or pneumatic circuits, i.e., pressure relief valves.

(22) Load limiting devices and acceleration/deceleration limiters must be locked or sealed when provided with a method to inhibit tampering and unauthorized adjustment.

(23) All crane brakes must automatically set in event of power failure. Slew brakes must also function in this manner or be capable of being set manually.

(24) Each crane must be provided with a slewing brake capable of holding in both directions preventing the superstructure from rotating during operation and must be capable of being set in the holding position and remaining so without further action on the part of the operator.

(25) The trolley must be provided with an operating brake capable of stopping the trolley in either direction. The system must include a means for holding the trolley without further action on the part of the operator, and must engage automatically if power or pressure to the brake is lost.

(26) In addition to the operating brake, the trolley must be equipped with an automatic braking device capable of stopping the movement of the load trolley in the event of trolley drive rope breakage, if such ropes are used.

(27) The body or frame of the trolley must be fitted with a means to restrain the trolley from becoming detached from its guide rail(s) in the event of trolley wheel or axle breakage or side loading.

(28) All electrical equipment must be properly grounded and protection must be provided against lightning per the manufacturer's recommendations or if not available, a registered professional electrical engineer.

(29) Each electrically powered crane must have an overcurrent protected main disconnect switch mounted at or near the initial base of the crane. This switch must have provisions for locking in the off position.

(30) Electrical equipment must be so located or guarded that live parts are not exposed to inadvertent contact by personnel and equipment under normal operating conditions.

(31) Electrical equipment must be protected from dirt, grease, oil, and moisture. Fixtures, wiring, and connections exposed to the weather must be of weather resistant type.

(32) Wiring must conform to the provisions of ANSI/NFPA 70 for temporary wiring. Motors, controls, switches, and other electrical equipment must meet the applicable requirements of ANSI/NFPA 70. Hoists, slewing, trolley, and travel controllers must conform to ISO 7752-1, 2010.

(33) Provision must be made to guard against any crane function operating in the opposite intended direction due to reversed phase connections.

(34) Electrical circuits between the fixed and rotating portions of the crane must pass through a slip ring assembly that will permit continuous rotation of the upper crane structure in either direction unless other means are provided to prevent damage to the electrical conductors.

(35) Individual overload protection must be provided for each motor.

(36) For traveling cranes, both ends of all tracks must be provided with stops or buffers adjusted for simultaneous contact with both sides of the travel base. Stops attached to rails must be mounted not less than three feet (1 m) inboard of the last rail support. Cranes must be equipped with means to prevent running into the buffers or stops while under power.

(37) An audible signal device must be provided with the control located within reach of the operator.

(38) An audible signal must automatically sound whenever the crane travels in order to warn persons in the vicinity.

(39) Bogies must be fitted with sweeps extending below the top of the rail, unless the construction of the rail foundation prohibits such extension, and placed in front of the leading wheels in either direction. Bogie wheels must be guarded.

(40) A means must be provided to limit the drop of bogie frames in case of wheel or axle breakage to a distance that will not cause the crane to overturn.

(41) A wind velocity indicating device must be mounted at or near the top of the crane. A velocity readout must be provided at the operator's station or in the cab. Temporary alternative measures: Use of wind speed information from a properly functioning indicating device on another tower crane on the same site, or a qualified person estimates the wind speed.

(42) Safety devices.

(a) The following safety devices are required on all self-erecting tower cranes unless otherwise specified:

(i) Boom stops on luffing boom type self-erecting tower cranes;

(ii) Jib stops on luffing boom type self-erecting tower cranes if equipped with a jib attachment;

(iii) Travel rail end stops at both ends of travel rail;

(iv) Travel rail clamps on all travel bogies;

(v) Integrally mounted check valves on all load supporting hydraulic cylinders;

(vi) Hydraulic system pressure limiting device;

(vii) The following brakes, which must automatically set in the event of pressure loss or power failure, are required:

(A) A hoist brake on all hoists;

(B) Slewing brake;

(C) Trolley brake;

(D) Rail travel brake.

(viii) Deadman control or forced neutral return control (hand) levers;

(ix) Emergency stop switch at the operator's station;

(x) Trolley end stops must be provided at both ends of travel of the trolley.

(b) Proper operation required. Operations must not begin unless the devices listed in this subsection are in proper working order. If a device stops working properly during operations, the operator must safely stop operations. The crane must be taken out of service, and operations must not resume until the device is again working properly. Alternative measures are not permitted to be used.

(43) Operational aids.

(a) The devices listed in this subsection (operational aids) are required on all self-erecting tower cranes covered by this part, unless otherwise specified.

(b) Crane operations must not begin unless the operational aids are in proper working order, except where the employer meets the specified temporary alternative measures. More protective alternative measures specified by the self-erecting tower crane manufacturer, if any, must be followed.

(c) When operational aids are inoperative or malfunctioning, the crane and/or device manufacturer's recommendations for operation or shutdown of the crane must be followed until the problems are corrected. Without such recommendations and any prohibitions from the manufacturer against further operation, the following requirements apply:

Note: If a replacement part is no longer available, the use of a substitute device that performs the same type of function is permitted and is not considered a modification under WAC 296-155-53400 (58) and (59).

(i) Recalibration or repair of the operational aid must be accomplished as soon as is reasonably possible, as determined by a qualified person.

(ii) Trolley travel limiting device. The travel of the trolley must be restricted at both ends of the jib by a trolley travel limiting device to prevent the trolley from running into the trolley end stops. Temporary alternative measures:

(A) Option A. The trolley rope must be marked (so it can be seen by the operator) at a point that will give the operator sufficient time to stop the trolley prior to the end stops.

(B) Option B. A spotter who is in direct communication with the operator must be used when operations are conducted within ten feet of the outer or inner trolley end stops.

(iii) Boom hoist limiting device. The range of the boom must be limited at the minimum and maximum radius. Temporary alternative measures: Clearly mark the hoist rope (so it can be seen by the operator) at a point that will give the operator sufficient time to stop the boom hoist within the minimum and maximum boom radius, or use a spotter who is in direct communication with the operator to inform the operator when this point is reached.

(iv) Anti two-blocking device. The self-erecting tower crane must be equipped with a device which automatically prevents damage from contact between the load block, overhaul ball, or similar component, and the boom tip (or fixed upper block or similar component). The device(s) must prevent such damage at all points where two-blocking could occur. Temporary alternative measures: Clearly mark the hoist rope (so it can be seen by the operator) at a point that will give the operator sufficient time to stop the hoist to prevent two-blocking, or use a spotter who is in direct communication with the operator to inform the operator when this point is reached.

Note: This temporary alternative measure cannot be used if lifting personnel in a suspended platform.

(v) Hoist drum lower limiting device. Self-erecting tower cranes manufactured after the effective date of this section must be equipped with a device that prevents the last two wraps of hoist cable from being spooled off the drum. Temporary alternative measures: Mark the hoist rope (so it can be seen by the operator) at a point that will give the operator sufficient time to stop the hoist prior to last two wraps of hoist cable being spooled off the drum, or use a spotter who is in direct communication with the operator to inform the operator when this point is reached.

(vi) Load moment limiting device. The self-erecting tower crane must have a device that prevents moment overloading. Temporary alternative measures: A radius indicating device must be used (if the tower crane is not equipped with a radius indicating device, the radius must be measured to ensure the load is within the rated capacity of the crane). In addition, the weight of the load must be determined from a reliable source (such as the load's manufacturer), by a reliable calculation method (such as calculating a steel beam from measured dimensions and a known per foot weight), or by other equally reliable means. This information must be provided to the operator prior to the lift.

(vii) Hoist line pull limiting device. The capacity of the hoist must be limited to prevent overloading, including each individual gear ratio if equipped with a multiple speed hoist transmission. Temporary alternative measures: The operator must ensure that the weight of the load does not exceed the capacity of the hoist (including for each individual gear ratio if equipped with a multiple speed hoist transmission).

(viii) Rail travel limiting device. The travel distance in each direction must be limited to prevent the travel bogies from running into the end stops or buffers. Temporary alternative measures: A spotter who is in direct communication with the operator must be used when operations are conducted within ten feet of either end of the travel rail end stops; the spotter must inform the operator of the distance of the travel bogies from the end stops or buffers.

(ix) Boom hoist drum positive locking device and control. The boom hoist drum must be equipped with a control that will enable the operator to positively lock the boom hoist drum from the cab. Temporary alternative measures: The device must be manually set when required if an electric, hydraulic or automatic type is not functioning.

(x) Boom angle or hook radius indicator.

(A) Luffing boom self-erecting tower cranes must have a boom angle indicator readable from the operator's station.

(B) Self-erecting hammerhead cranes manufactured after the effective date of this section must have a hook radius indicator readable from the operator's station. Temporary alternative measures: Hook radii or boom angle must be determined by measuring the hook radii or boom angle with a measuring device.

(xi) Trolley travel deceleration device. The trolley speed must be automatically reduced prior to the trolley reaching the end limit in both directions. Temporary alternative measures: The employer must post a notice in the cab of the crane notifying the operator that the trolley travel deceleration device is malfunctioning and instructing the operator to take special care to reduce the trolley speed when approaching the trolley end limits.

(xii) Boom hoist deceleration device. The boom speed must be automatically reduced prior to the boom reaching the minimum or maximum radius limit. Temporary alternative measures: The employer must post a notice in the cab of the crane notifying the operator that the boom hoist deceleration device is malfunctioning and instructing the operator to take special care to reduce the boom speed when approaching the boom maximum or minimum end limits.

(xiii) Load hoist deceleration device. The load speed must be automatically reduced prior to the hoist reaching the upper limit. Temporary alternative measures: The employer must post a notice in the cab of the crane notifying the operator that the load hoist deceleration device is malfunctioning and instructing the operator to take special care to reduce the hoist speed when approaching the upper limit.

(xiv) Wind speed indicator. A device must be provided to display the wind speed and must be mounted at or near the top of the crane structure. Temporary alternative measures: Use of wind speed information from a properly functioning indicating device on another crane on the same site, or a qualified person estimates the wind speed.

(xv) Load indicating device. Cranes manufactured after the effective date of this section, must have a device that displays the magnitude of the load on the hook. Displays that are part of load moment limiting devices that display the load on the hook meet this requirement. Temporary alternative measures: The weight of the load must be determined from a reliable source (such as the load's manufacturer), by a reliable calculation method (such as calculating a steel beam from measured dimensions and a known per foot weight), or by other equally reliable means. This information must be provided to the operator prior to the lift.

(44) All welding procedures and welding operator qualifications for use in repair or alteration of load sustaining members must be in accordance with ANSI/AWS D14.3 or ANSI/AWS D1.1. Where special steels or other materials are

used, the manufacturer or a qualified person must provide welding procedure instructions. The type of metal used for load sustaining members must be identified by the manufacturer. In the absence of the manufacturer an RPSE must be used.

[Statutory Authority: RCW 49.17.010, 49.17.040, 49.17.050, 49.17.440, 49.17.060, and 29 C.F.R. 1926, Subpart CC. WSR 12-01-086, § 296-155-54100, filed 12/20/11, effective 2/1/12.]

WAC 296-155-54115 Self-erecting tower cranes—Operations. (1) The operator must not engage in any practice that diverts their attention while actually engaged in operating the crane.

(2) Before leaving the crane unattended the operator must:

(a) Set down the load, rigging gear, bucket, lifting magnet, or other devices;

(b) Land any load suspended below the hook;

(c) Put controls in the off or neutral position;

(d) Set brakes and other locking devices;

(e) Disengage the main control circuit;

(f) Stop the engine: An exception to this may exist when crane operation is frequently interrupted during a shift and the operator must leave the crane. Under these circumstances, the engine may remain running and (a) through (e) of this subsection must apply. The operator must be situated where any entry to the crane can be observed.

(g) Leave the superstructure free to weathervane unless provisions for nonweathervaning have been specified by the manufacturer or by a qualified person.

Note: Additional information relating to cranes being unattended are located in WAC 296-155-53400(52) of this part.

(3) If power fails during operation, the operator must:

(a) Set all brakes and locking devices;

(b) Move all clutch or other power controls to the "off" or "neutral" position;

(c) If practical, the suspended load must be landed under brake control, according to the manufacturer's procedures.

(4) The operator must be familiar with the crane and its proper care. If adjustments or repairs are necessary, the operator must report the condition to the competent person. The next operator must be notified of the condition.

(5) All controls must be tested by the operator at the start of a new shift, if possible. If any controls fail to operate properly, they must be adjusted or repaired before operations are initiated.

(6) Cranes must not be operated when wind speeds exceed the maximum velocity recommended by the manufacturer. Where the manufacturer does not specify this information, an RPE must determine the maximum allowable velocity.

(7) Prior to daily operation, operator aids must be checked to determine if they are working properly as required in WAC 296-155-53405(3).

(8) During adverse weather conditions which reduce visibility, operations must be performed in accordance with the manufacturer's specifications, when not available follow RPE's recommendations for reduced function speeds and with signaling means appropriate to the situation.

(9) No less than two full wraps of rope must remain on the load hoist drum(s) at any time during operation.

(10) When slewing the boom (jib), trolleying a load, or traveling the crane, sudden starts and stops must be avoided. Slew and travel speeds must be such that the load does not swing out beyond the radius at which it can be controlled. A tag or restraint line must be used when uncontrolled rotation of the load is hazardous.

(11) Cranes must not be operated without the ballast or counterweight in place as specified by the manufacturer. Under specific conditions, such as during crane assembly or disassembly, the manufacturer's recommendations for the amount of partial ballast or counterweight must be adhered to. The maximum ballast or counterweight approved by the manufacturer for use on a given crane must not be exceeded.

(12) The load must be free when lifted; it must not be caught on nor attached to other objects. Side loading of jibs must be limited to freely suspended loads. Cranes must not be used for dragging loads.

[Statutory Authority: RCW 49.17.010, 49.17.040, 49.17.050, 49.17.440, 49.17.060, and 29 C.F.R. 1926, Subpart CC. WSR 12-01-086, § 296-155-54115, filed 12/20/11, effective 2/1/12.]

WAC 296-155-542 Overhead/bridge and gantry cranes.

[Statutory Authority: RCW 49.17.010, 49.17.040, 49.17.050, 49.17.440, 49.17.060, and 29 C.F.R. 1926, Subpart CC. WSR 12-01-086, § 296-155-542, filed 12/20/11, effective 2/1/12.]

WAC 296-155-54200 Overhead/bridge and gantry cranes—General. (1) Permanently installed overhead/bridge and gantry cranes which are located in a manufacturing facility or powerhouse must follow the requirements of WAC 296-24-235 (General safety and health standards), even when a construction activity is being performed. This requirement applies to overhead, bridge, gantry cranes, including semigantry, cantilever gantry, wall cranes, storage bridge cranes, and others having the same fundamental characteristics.

(2) Overhead and gantry cranes that are not permanently installed must follow the applicable requirements in chapter 296-155 WAC Part L.

(3) Cranes included in this section must meet the applicable requirements for design, inspection, construction, testing, maintenance and operation as prescribed in:

(a) ASME B30.2-2005, Safety Standard for Overhead and Gantry Cranes (Top Running Bridge, Single or Multiple Girder, Top Running Trolley Hoist).

(b) ASME B30.11-2010, Safety Standards for Monorails and Underhung Cranes.

(c) ASME B30.17-2006, Safety Standards for Overhead and Gantry Cranes (Top Running Bridge, Single Girder, Underhung Hoist).

(d) It is not the intent of this rule to require retrofitting of existing cranes. However, when an item is being modified, its performance needs to be reviewed by a qualified person and compared to the applicable sections of this rule. For modification requirements see WAC 296-155-53400 (58) and (59). For cranes manufactured prior to the effective date of this rule the design and construction criteria must meet at a minimum, ASME B30.2.0-1990.

(4) The rated load of the crane must be plainly marked on each side of the crane, and if the crane has more than one hoisting unit, each hoist must have its rated load marked on it or its load block, and this marking must be clearly legible from the ground or floor.

(5) The crane or surrounding structure must be marked to provide operating directions that match and are visible from the crane's operating controls, i.e., north/south, east/west or forward/back, left/right.

(6) Overhead and gantry cranes with bridge trucks must be equipped with sweeps which extend below the top of the rail and project in front of the truck wheels.

(7) Except for floor-operated cranes, an effective warning device must be provided for each crane equipped with a power traveling mechanism.

(8) A wind-indicating device must be provided for all outdoor overhead and gantry cranes. The device must be mounted on the crane runway structure and must give a visible and audible alarm to the crane operator at a predetermined wind velocity. A single wind-indicating device may serve as an alarm for more than one crane.

(9) Electrical.

(a) Wiring and equipment must comply with Article 610 of ANSI/NFPA No. 70, National Electrical Code and chapter 296-155 WAC Part I.

(b) The control circuit voltage must not exceed 600 volts for AC or DC.

(c) The voltage at pendant pushbuttons must not exceed 150 volts for AC and 300 volts for DC.

(d) Where multiple conductor cable is used with a suspended pushbutton station, the station must be supported in a manner that will protect the electrical conductors against strain.

(e) Pendant control stations must be constructed to prevent electrical shock. The pushbutton enclosure must be at ground potential and marked for identification of functions.

(10) All welding procedures and welding operator qualifications to be used on load sustaining members must be in accordance with ANSI/AWS D1.1, except as modified by ANSI/AWS D14.1.

[Statutory Authority: RCW 49.17.010, 49.17.040, 49.17.050, 49.17.060 and chapter 49.17 RCW, and 29 C.F.R. 1926, Subpart CC. WSR 13-02-068, § 296-155-54200, filed 12/31/12, effective 2/1/13. Statutory Authority: RCW 49.17.010, 49.17.040, 49.17.050, 49.17.440, 49.17.060, and 29 C.F.R. 1926, Subpart CC. WSR 12-01-086, § 296-155-54200, filed 12/20/11, effective 2/1/12.]

WAC 296-155-54215 Overhead/bridge and gantry cranes—Operations. (1) The operator must not engage in any practice that diverts their attention while actually engaged in operating the crane.

(2) The operator must do the following before leaving a cab-operated crane or a cab-operated carrier unattended:

(a) Remove any attached load and raise the hook to the highest allowable position.

(b) Place controllers or master switches in the "off" position and deenergize the main switch (crane disconnect) of the specific crane.

Note: Additional information relating to cranes being unattended is located in WAC 296-155-53400(52) of this part.

(3) If power fails during operation, the operator must:

(a) Move all clutch or other power controls to the "off" position;

(b) Prior to reuse of the crane operating motions must be checked for proper direction.

(4) The operator must be familiar with the crane and its proper care. If adjustments or repairs are necessary, the operator must report the condition to the competent person. The next operator must be notified of the condition.

(5) The load must not be lowered below the point where less than two full wraps of wire rope remain on the drum.

(6) When two or more cranes are used to lift a load, one qualified person must be in charge of the operation. This person must analyze the operation and instruct all personnel involved in the proper positioning, rigging of the load, and the movements to be made.

(7) The operator must not leave the position at the controls while the load is suspended over an area accessible to people.

(8) For cab and remote operated cranes, when the load or hook approaches near or over personnel, a warning signal must be sounded.

(9) Hoist limit switch.

(a) At the beginning of each operator's shift, the upper limit switch of each hoist must be tested under no load.

(b) The hoist limit switch which controls the upper limit of travel of the load block must never be used as an operating control.

[Statutory Authority: RCW 49.17.010, 49.17.040, 49.17.050, 49.17.440, 49.17.060, and 29 C.F.R. 1926, Subpart CC. WSR 12-01-086, § 296-155-54215, filed 12/20/11, effective 2/1/12.]

WAC 296-155-543 Derricks.

[Statutory Authority: RCW 49.17.010, 49.17.040, 49.17.050, 49.17.440, 49.17.060, and 29 C.F.R. 1926, Subpart CC. WSR 12-01-086, § 296-155-543, filed 12/20/11, effective 2/1/12.]

WAC 296-155-54300 Derricks—General. (1) This section contains supplemental requirements for derricks, whether temporarily or permanently mounted; all sections of this part apply to derricks unless specified otherwise. A derrick is powered equipment consisting of a mast or equivalent member that is held at or near the end by guys or braces, with or without a boom, and its hoisting mechanism. The mast/equivalent member and/or the load is moved by the hoisting mechanism (typically base-mounted) and operating ropes. Derricks include: A-frame, basket, breast, Chicago boom, gin pole (except gin poles used for erection of communication towers), guy, shearleg, stiffleg, and variations of such equipment.

(2) Derricks. All derricks in use must meet the applicable requirements for design, construction, installation, inspection, testing, maintenance, and operation as prescribed in American National Standard Institute B30.6-2010, Safety Standard for Derricks. It is not the intent of this rule to require retrofitting of existing derricks. However, when an item is being modified, its performance needs to be reviewed by a qualified person and compared to the applicable sections of this rule. For modification requirements see WAC 296-155-53400 (58) and (59). For derricks manufactured prior to the effective date of this rule the design and construction criteria must meet at a minimum, ASME B30.6-1990.

(3) Derricks must be constructed to meet all stresses imposed on members and components when installed and operated in accordance with the manufacturer's/builder's procedures and within its rated capacity.

(4) The manufacturer's recommendations must be followed when installing, erecting, operating, maintenance and dismantling derricks. If the manufacturer's recommendations are not available, follow the requirements in ASME B30.6-2010.

(5) When derricks are erected/dismantled, written instructions by the manufacturer or qualified person and a list of the weights of each subassembly to be erected/dismantled must be at the site.

(6) Procedures must be established before beginning derrick erection/dismantling work to implement the instructions and adapt them to the particular needs of the site.

(7) A qualified person must supervise the erection and dismantling of the derrick.

(8) Derricks and their crane assembly parts/components must be inspected by an accredited certifier, prior to assembly and following erection of the derrick before placing the crane in service (see WAC 296-155-53212). Only inspected and preapproved components are allowed to be used in the assembly of a derrick.

(9) Prior to erecting a derrick on a nonstandard base/structural support, the employer must ensure that the engineering configuration of this base/structural support has been reviewed and acknowledged as acceptable by an independent registered professional structural engineer (RPSE), licensed under chapter 18.43 RCW.

(10) An RPSE must certify that the derrick foundation, structural supports and underlying soil provide adequate support for the derrick with its applied torsional and overturning moments and the horizontal and vertical forces.

(11) Derricks must be attached to bases/structural supports in compliance with the manufacturer's or an RPSE's instructions.

(12) Prior to installing a derrick that will be attached to an existing building, new construction, or structure, an RPSE must certify that the structural attachments to the building are designed to withstand the torsional and overturning moments and the horizontal and vertical forces created by the derrick to be installed.

(13) The engineer of record must be consulted to verify that the host structure is capable of safely resisting the applied derrick forces, if this engineer is not available an RPSE must perform this verification.

(14) Derrick superstructures and machine deck (counterweight jib/counter-jibs) must be arranged to receive counterweights, made in accordance with the manufacturer's specifications for the specified jib or boom length, and to hold them in position. Means must be provided to guard against shifting or dislodgement during derrick operation. Manufacturer's specified counterweight weights are not to be exceeded.

(15) For derricks utilizing ballast, bases must include provisions to support and position the ballast. Means must be provided to guard against shifting or dislodgement of ballast during derrick operation.

(16) All electrical equipment must be properly grounded and protection must be provided against lightning per the manufacturer's recommendations or if not available, a registered professional electrical engineer.

(17) Each electrically powered derrick must have a main disconnect switch at or near the initial base of the derrick. This switch must have provisions for locking in the "off" position.

(18) Electrical equipment must be so located or guarded that live parts are not exposed to inadvertent contact by personnel and equipment under normal operating conditions.

(19) Electrical equipment must be protected from dirt, grease, oil, and moisture. Fixtures, wiring, and connections exposed to the weather must be of weather resistant type.

(20) Wiring must conform to the provisions of ANSI/NFPA 70 for temporary wiring. Motors, controls, switches, and other electrical equipment must meet applicable requirements of ANSI/NFPA 70. Hoists, slewing, trolley, and travel controllers must conform to ISO 7752-1, 2010.

(21) Provisions must be made to guard against reversing of each motor due to reversed phase connections.

(22) Electrical circuits between the fixed and rotating portions of the derrick must pass through a slip ring assembly that will permit continuous rotation of the upper derrick structure in either direction, unless other means are provided to prevent damage to the electrical conductors.

(23) Individual overload protection must be provided for each motor.

(24) Employees required to perform duties on the boom/jib of derricks must be protected against falling in accordance with Part C-1 of this chapter.

(25) Advertising signs or similar panels must not be installed on the derrick unless size, design, and positioning satisfy the manufacturer's recommendations, in the absence of the manufacturer's recommendations, an RPE's written approval must be obtained.

(26) For night operations, lighting must be adequate to illuminate the working radius while not interfering with the operator's vision.

(27) All welding procedures and welding operator qualifications for use in repair or alteration of load sustaining members must be in accordance with ANSI/AWS D14.3 or ANSI/AWS D1.1. Where special steels or other materials are used, the manufacturer or a qualified person must provide welding procedure instructions. The type of metal used for load sustaining members must be identified by the manufacturer. In the absence of the manufacturer an RPSE must be used.

[Statutory Authority: RCW 49.17.010, 49.17.040, 49.17.050, 49.17.440, 49.17.060, and 29 C.F.R. 1926, Subpart CC. WSR 12-01-086, § 296-155-54300, filed 12/20/11, effective 2/1/12.]

WAC 296-155-54305 Derricks—Construction. (1) Guy derricks.

(a) The minimum number of guys must be six, with equal spacing, except where a qualified person or derrick manufacturer approves variations from these requirements and revises the rated capacity to compensate for such variations.

(b) Guy derricks must not be used unless the employer has the following guy information from the manufacturer or a qualified person, when not available from the manufacturer:

(i) The number of guys.

(ii) The spacing around the mast.

(iii) The size, grade, and construction of rope to be used for each guy.

(c) For guy derricks manufactured after December 18, 1970, in addition to the information required in subsection (b) of this section, the employer must have the following guy information from the manufacturer or a qualified person, when not available from the manufacturer:

(i) The amount of initial sag or tension.

(ii) The amount of tension in guy line rope at anchor.

(d) The mast base must permit the mast to rotate freely with allowance for slight tilting of the mast caused by guy slack.

(e) The mast cap must:

(i) Permit the mast to rotate freely.

(ii) Withstand tilting and cramping caused by the guy loads.

(iii) Be secured to the mast to prevent disengagement during erection.

(iv) Be provided with means for attaching guy ropes.

(2) Stiffleg derricks.

(a) The mast must be supported in the vertical position by at least two stifflegs; one end of each must be connected to the top of the mast and the other end securely anchored.

(b) The stifflegs must be capable of withstanding the loads imposed at any point of operation within the load chart range.

(c) The mast base must:

(i) Permit the mast to rotate freely (when necessary).

(ii) Permit deflection of the mast without binding.

(d) The mast must be prevented from lifting out of its socket when the mast is in tension.

(e) The stiffleg connecting member at the top of the mast must:

(i) Permit the mast to rotate freely (when necessary).

(ii) Withstand the loads imposed by the action of the stifflegs.

(iii) Be secured so as to oppose separating forces.

(3) Gin pole derricks.

(a) Guy lines must be sized and spaced so as to make the gin pole stable in both boomed and vertical positions.

Exception: Where the size and/or spacing of guy lines do not result in the gin pole being stable in both boomed and vertical positions, the employer must ensure that the derrick is not used in an unstable position.

(b) The base of the gin pole must permit movement of the pole (when necessary).

(c) The gin pole must be anchored at the base against horizontal forces (when such forces are present).

(4) Chicago boom derricks. The fittings for stepping the boom and for attaching the topping lift must be arranged to:

(a) Permit the derrick to swing at all permitted operating radii and mounting heights between fittings.

(b) Accommodate attachment to the upright member of the host structure.

(c) Withstand the forces applied when configured and operated in accordance with the manufacturer's/builder's procedures and within its rated capacity.

(d) Prevent the boom or topping lift from lifting out under tensile forces.

(5) Anchoring and guying.

(a) Load anchoring data developed by the manufacturer or a registered professional engineer must be used.

(b) Guy derricks.

(i) The mast base must be anchored per the manufacturer's recommendations. In the absence of the manufacturer's recommendations an RPSE must be used.

(ii) The guys must be secured to the ground or other firm anchorage.

(iii) The anchorage and guying must be designed to withstand maximum horizontal and vertical forces encountered when operating within rated capacity with the particular guy slope and spacing specified for the application.

(c) Stiffleg derricks.

(i) The mast base and stifflegs must be anchored per the manufacturer's recommendations. In the absence of the manufacturer's recommendations an RPSE must be used.

(ii) The mast base and stifflegs must be designed to withstand maximum horizontal and vertical forces encountered when operating within rated capacity with the particular stiffleg spacing and slope specified for the application.

(d) Gin pole derricks.

(i) Side guys must be located so that they do not usurp the topping-lifted load;

(ii) Side guys must be evenly played out or in depending on their position relative to the boom foot pivot.

(6) Swingers and hoists.

(a) The boom, slewing mechanism, and hoists must be suitable for the derrick work intended and must be anchored to prevent displacement from the imposed loads.

(b) Base-mounted drum hoists. Base-mounted drum hoists must meet the requirements of ASME B30.7-2006, including the following:

(i) Load ratings must be the manufacturer's recommended single rope pull in pounds (kilograms), at a specified rate of speed, on a given size drum, and prescribed number of layers of rope.

(ii) Markings. Hoists are to be marked with the following identification for each drum:

(A) Load rating;

(B) Drum size consisting of barrel diameter, barrel length, and flange diameter;

(C) Rope size(s);

(D) Rope speed in feet per minute (meters per second);

(E) Rated power supply.

(iii) Attachments and anchorages for hoist bases must provide mounting of the hoist and must be capable of withstanding loads imposed by the hoist under operating conditions. The weight of the hoist and loads imposed by the load ropes must be provided for.

(iv) Location of drum hoists. Drum hoists must be located in a manner that provides proper rope spooling on the drums.

[Statutory Authority: RCW 49.17.010, 49.17.040, 49.17.050, 49.17.440, 49.17.060, and 29 C.F.R. 1926, Subpart CC. WSR 12-01-086, § 296-155-54305, filed 12/20/11, effective 2/1/12.]

WAC 296-155-54320 Derricks—Operations. (1) The operator must not engage in any practice that diverts their attention while actually engaged in operating the derrick.

(2) The operator must do the following before leaving the derrick unattended:

(a) Set down any attached load.

(b) Disengage clutches.

(c) Put the handles of controls in the "off" position.

(d) Open main switch or stop the engine.

(e) Engage the manual locking devices in the absence of automatic holding equipment.

Note: Additional information relating to cranes being unattended is located in WAC 296-155-53400(52) of this part.

(3) If power fails during operation, the derrick hoist operator must:

(a) If practical, the suspended load must be landed under brake control, according to the manufacturer's procedures or an RPE;

(b) Set all brakes or locking devices;

(c) Move all clutch or other power controls to the "off" position.

(4) The operator must be familiar with the derrick and its proper care. If adjustments or repairs are necessary, the operator must report the condition to the competent person, and must also notify the next operator.

(5) The operator must test all controls at the start of a new shift. If any controls do not operate properly, they must be adjusted or repaired before operations are begun.

(6) The load must not be lowered below the point where less than two full wraps of rope remain on the drum.

(7) When slewing a derrick, sudden starts and stops must be avoided. Slewing speed must be such that the load does not swing out beyond the radius at which it can be controlled. A tag or restraint line must be used when slewing of the load is hazardous.

(8) Use of winch heads.

(a) Ropes must not be handled on a winch head without the knowledge of the operator.

(b) While a winch head is being used, the operator must be within reach of the power unit control lever.

(9) Securing the derrick.

(a) When the boom is being held in a fixed position, dogs, pawls, or other positive holding mechanisms on the boom hoist must be engaged.

(b) When taken out of service for thirty days or more, the derrick must be secured according to the manufacturer's recommendations. In the absence of the manufacturer's recommendations an RPE must be used.

[Statutory Authority: RCW 49.17.010, 49.17.040, 49.17.050, 49.17.440, 49.17.060, and 29 C.F.R. 1926, Subpart CC. WSR 12-01-086, § 296-155-54320, filed 12/20/11, effective 2/1/12.]

WAC 296-155-544 Additional requirements for other types of cranes/derricks.

[Statutory Authority: RCW 49.17.010, 49.17.040, 49.17.050, 49.17.440, 49.17.060, and 29 C.F.R. 1926, Subpart CC. WSR 12-01-086, § 296-155-544, filed 12/20/11, effective 2/1/12.]

WAC 296-155-54400 Floating cranes/derricks and land cranes/derricks on barges. (1) This section contains supplemental requirements for floating cranes/derricks and land cranes/derricks on barges, pontoons, vessels or other means of flotation (i.e., vessel/flotation device). The sections of this part apply to floating cranes/derricks and land cranes/derricks on barges, pontoons, vessels or other means of flotation, unless specified otherwise. The requirements of this section do not apply when using jacked barges when the jacks are deployed to the river, lake, or sea bed and the barge is fully supported by the jacks.

(2) General requirements. The requirements in subsections (3) through (10) of this section apply to both floating cranes/derricks and land cranes/derricks on barges, pontoons, vessels or other means of flotation.

(3) Work area control.

(a) The requirements of WAC 296-155-53400(42) (work area control) apply, except for WAC 296-155-53400 (42)(b)(ii).

(b) The employer must either:

(i) Erect and maintain control lines, warning lines, railings or similar barriers to mark the boundaries of the hazard areas; or

(ii) Clearly mark the hazard areas by a combination of warning signs (such as, "Danger - Swing/Crush Zone") and high visibility markings on the equipment that identify the hazard areas. In addition, the employer must train each employee to understand what these markings signify.

(4) Keeping clear of the load. WAC 296-155-53400(43) does not apply.

(5) Additional safety devices. In addition to the safety devices listed in WAC 296-155-53410, the following safety devices are required:

(a) Barge, pontoon, vessel or other means of flotation list and trim indicator. The safety device must be located in the cab or, when there is no cab, at the operator's station.

(b) Positive equipment house lock.

(c) Wind speed and direction indicator. A competent person must determine if wind is a factor that needs to be considered; if wind needs to be considered, a wind speed and direction indicator must be used.

(6) Operational aids.

(a) An anti two-block device is required only when hoisting personnel or hoisting over an occupied cofferdam or shaft.

(b) WAC 296-155-53412 (3)(h) (Load weighing and similar devices) does not apply to dragline, clamshell (grapple), magnet, drop ball, container handling, concrete bucket, and pile driving work performed under this section.

(7) Accessibility of procedures applicable to equipment operation. If the crane/derrick has a cab, the requirements of WAC 296-155-53400(6) apply. If the crane/derrick does not have a cab, the employer must ensure that:

(a) Rated capacities (load charts) are posted at the operator's station. If the operator's station is moveable (such as with pendant-controlled equipment), the load charts are posted on the equipment.

(b) Procedures applicable to the operation of the equipment (other than load charts), recommended operating speeds, special hazard warnings, instructions and operators manual, must be readily available on board the vessel/flotation device.

(8) Inspections. In addition to meeting the requirements of WAC 296-155-53405 for inspecting the crane/derrick, the barge, pontoons, vessel or other means of flotation used to support a floating crane/derrick or land crane/derrick must be inspected, to ensure that:

(a) Shift. For each shift inspection, the means used to secure/attach the equipment to the vessel/flotation device is in proper condition, including wear, corrosion, loose or missing fasteners, defective welds, and (when applicable) insufficient tension.

(b) Monthly. For each monthly inspection:

(i) The means used to secure/attach the equipment to the vessel/flotation device is in proper condition, including inspection for wear, corrosion, and (when applicable) insufficient tension.

(ii) The vessel/flotation device is not taking on water.

(iii) The deck load is properly secured.

(iv) The vessel/flotation device is watertight based on the condition of the chain lockers, storage, fuel compartments, and hatches.

(v) The firefighting and lifesaving equipment is in place and functional.

(c) The shift and monthly inspections are conducted by a competent person, and:

(i) If any deficiency is identified, an immediate determination is made by a qualified person whether the deficiency constitutes a hazard.

(ii) If the deficiency is determined to constitute a hazard, the vessel/flotation device is removed from service until the deficiency has been corrected.

(d) Annual: External vessel/flotation device inspection. For each annual inspection:

(i) The external portion of the barge, pontoons, vessel or other means of flotation used is inspected annually by a qualified person who has expertise with respect to vessels/flotation devices and that the inspection includes the following items:

(A) The items identified in this subsection.

(B) Cleats, bitts, chocks, fenders, capstans, ladders, and stanchions, for significant corrosion, wear, deterioration, or deformation that could impair the function of these items.

(C) External evidence of leaks and structural damage; evidence of leaks and damage below the waterline may be determined through internal inspection of the vessel/flotation device.

(D) Four-corner draft readings.

(E) Firefighting equipment for serviceability.

(ii) Rescue skiffs, lifelines, work vests, life preservers and ring buoys are inspected for proper condition.

(iii) If any deficiency is identified, an immediate determination is made by the qualified person whether the deficiency constitutes a hazard or, though not yet a hazard, needs to be monitored in the monthly inspections.

(A) If the qualified person determines that the deficiency constitutes a hazard, the vessel/flotation device is removed from service until it has been corrected. See requirements in WAC 296-155-53400(68).

(B) If the qualified person determines that, though not presently a hazard, the deficiency needs to be monitored, the deficiency is checked in the monthly inspections.

(e) Four-year: Internal vessel/flotation device inspection. For each four-year inspection:

(i) A marine engineer, marine architect, licensed surveyor, or other qualified person who has expertise with respect to vessels/flotation devices surveys the internal portion of the barge, pontoons, vessel, or other means of flotation.

(ii) If the surveyor identifies a deficiency, an immediate determination is made by the surveyor as to whether the deficiency constitutes a hazard or, though not yet a hazard, needs to be monitored in the monthly or annual inspections, as appropriate.

(A) If the surveyor determines that the deficiency constitutes a hazard, the vessel/flotation device is removed from service until it has been corrected.

(B) If the surveyor determines that, though not presently a hazard, the deficiency needs to be monitored, the deficiency is checked in the monthly or annual inspections, as appropriate.

(f) Documentation. The monthly and annual inspections required in (b) and (d) of this subsection are documented in accordance with WAC 296-155-53405, respectively, and that the four-year inspection required in this section is documented, except that the documentation for that inspection must be retained for a minimum of four years. All such documents must be made available, during the applicable document retention period, to all persons who conduct inspections in accordance with WAC 296-155-53405.

(9) Working with a diver. The employer must meet the following additional requirements when working with a diver in the water:

(a) If a crane/derrick is used to get a diver into and out of the water, it must not be used for any other purpose until the diver is back on board. When used for more than one diver, it must not be used for any other purpose until all divers are back on board.

(b) The operator must remain at the controls of the crane/derrick at all times.

(c) In addition to the requirements in WAC 296-155-53406 (Signals), either:

(i) A clear line of sight must be maintained between the operator and dive tender; or

(ii) The signals between the operator and dive tender must be transmitted electronically.

(d) The means used to secure the crane/derrick to the vessel/flotation device (see subsection (12)(e) of this section) must not allow any amount of shifting in any direction.

(10) Barge, pontoons, vessel or other flotation manufacturer's specifications and limitations.

(a) The employer must ensure that the barge, pontoons, vessel, or other means of flotation must be capable of withstanding imposed environmental, operational and in-transit loads when used in accordance with the manufacturer's specifications and limitations.

(b) The employer must ensure that the manufacturer's specifications and limitations with respect to environmental, operational, and in-transit loads for a barge, pontoon, vessel, or other means of flotation are not exceeded or violated.

(c) When the manufacturer's specifications and limitations are unavailable, the employer must ensure that the specifications and limitations established by a marine engineer, marine architect, licensed surveyor, or other qualified person who has expertise with respect to environmental, operational and in-transit loads for the barge, pontoons, vessel, or other means of flotation are not exceeded or violated.

(11) Floating cranes/derricks. For equipment designed by the manufacturer (or employer) for marine use by permanent attachment to barges, pontoons, vessels or other means of flotation:

(a) Load charts.

(i) The employer must not exceed the manufacturer load charts applicable to operations on water. When using these charts, the employer must comply with all parameters and limitations (such as dynamic and environmental parameters) applicable to the use of the charts.

(ii) The employer must ensure that load charts take into consideration a minimum wind speed of forty miles per hour.

(b) The employer must ensure that the requirements for maximum allowable list and maximum allowable trim as specified in Table 6 of this section are met.

Table 6

Equipment designed for marine use by permanent attachment (other than derricks):		
Rated Capacity	Maximum Allowable List	Maximum Allowable Trim
25 tons or less	5 degrees	5 degrees
Over 25 tons	7 degrees	7 degrees
Derricks designed for marine use by permanent attachment:		
Any rated capacity	10 degrees	10 degrees

(c) The employer must ensure that the equipment is stable under the conditions specified in Tables 7 and 8 of this section. (Note: Freeboard is the vertical distance between the water line and the main deck of the vessel.)

Table 7

Operated at	**Wind speed**	**Minimum freeboard**
Rated capacity	60 mph	2 ft
Rated capacity plus 25%	60 mph	2 ft
High boom, no load	60 mph	2 ft

Table 8

For backward stability of the boom:	
Operated at	**Wind speed**
High boom, no load, full back list (least stable condition)	90 mph

(d) If the equipment is employer-made, it must not be used unless the employer has documents demonstrating that the load charts and applicable parameters for use meet the requirements of (a) through (c) of this subsection. Such documents must be signed by a registered professional engineer who is a qualified person with respect to the design of this type of equipment (including the means of flotation).

(e) The employer must ensure that the barge, pontoons, vessel or other means of flotation used:

(i) Are structurally sufficient to withstand the static and dynamic loads of the crane/derrick when operating at the crane/derrick's maximum rated capacity with all planned and actual deck loads and ballasted compartments.

(ii) Have a subdivided hull with one or more longitudinal watertight bulkheads for reducing the free-surface effect.

(iii) Have access to void compartments to allow for inspection and pumping.

(12) Land cranes/derricks. For land cranes/derricks used on barges, pontoons, vessels or other means of flotation, the employer must ensure that:

(a) The rated capacity of the equipment (including, but not limited to, modification of load charts) applicable for use on land is reduced to:

(i) Account for increased loading from list, trim, wave action, and wind.

(ii) Be applicable to a specified location(s) on the specific barge, pontoons, vessel or other means of flotation that will be used, under the environmental conditions expected and encountered.

(iii) The conditions required in (c) and (d) of this subsection are met.

(b) The rated capacity modification required in (a) of this subsection is performed by the equipment manufacturer, or a qualified person who has expertise with respect to both land crane/derrick capacity and the stability of vessels/flotation devices.

(c) For list and trim.

(i) The maximum allowable list and the maximum allowable trim for the barge, pontoon, vessel or other means of flotation must not exceed the amount necessary to ensure that the conditions in (d) of this subsection are met. In addition, the maximum allowable list and the maximum allowable trim does not exceed the least of the following: Five degrees, the amount specified by the crane/derrick manufacturer, or, when, an amount is not so specified, the amount specified by the qualified person.

(ii) The maximum allowable list and the maximum allowable trim for the land crane/derrick does not exceed the amount specified by the crane/derrick manufacturer, or, when, an amount is not so specified, the amount specified by the qualified person.

(d) For the following conditions:

(i) All deck surfaces of the barge, pontoons, vessel or other means of flotation used are above water.

(ii) The entire bottom area of the barge, pontoons, vessel or other means of flotation used is submerged.

(e) Physical attachment, corralling, rails system and centerline cable system meet the requirements in Option (1), Option (2), Option (3), or Option (4) of this section, and that whichever option is used also meets the requirements of (e)(v) of this subsection.

(i) Option (1) - Physical attachment. The crane/derrick is physically attached to the barge, pontoons, vessel or other means of flotation. Methods of physical attachment include crossed-cable systems attached to the crane/derrick and vessel/flotation device, bolting or welding the crane/derrick to the vessel/flotation device, strapping the crane/derrick to the

vessel/flotation device with chains, or other methods of physical attachment.

(ii) Option (2) - Corralling. The crane/derrick is prevented from shifting by installing barricade restraints (i.e., a corralling system). Employers must ensure that corralling systems do not allow the equipment to shift by any amount of shifting in any direction.

(iii) Option (3) - Rails. The crane/derrick must be prevented from shifting by being mounted on a rail system. Employers must ensure that rail clamps and rail stops are used unless the system is designed to prevent movement during operation by other means.

(iv) Option (4) - Centerline cable system. The crane/derrick is prevented from shifting by being mounted to a wire rope system. The employer must ensure that the wire rope system meets the following requirements:

(A) The wire rope and attachments are of sufficient size and strength to support the side load of crane/derrick.

(B) The wire rope is attached physically to the vessel/flotation device.

(C) The wire rope is attached to the crane/derrick by appropriate attachment methods (such as shackles or sheaves) on the undercarriage, and that the method used will allow the crew to secure the crane/derrick from movement during operation and to move the crane/derrick longitudinally along the vessel/flotation device for repositioning.

(D) Means are installed to prevent the crane/derrick from passing the forward or aft end of the wire rope attachments.

(E) The crane/derrick is secured from movement during operation.

(v) The systems/means used to comply with Option (1), Option (2), Option (3), or Option (4) of this section are designed by a marine engineer, registered professional engineer familiar with floating crane/derrick design, or qualified person familiar with floating crane/derrick design.

(f) Exception. For mobile auxiliary cranes used on the deck of a floating crane/derrick, the requirement specified by (e) of this subsection to use Option (1), Option (2), Option (3), or Option (4) does not apply when the employer demonstrates implementation of a plan and procedures that meet the following requirements:

(i) A marine engineer or registered professional engineer familiar with floating crane/derrick design develops and signs a written plan for the use of the mobile auxiliary crane.

(ii) The plan is designed so that the applicable requirements of this section are met despite the position, travel, operation, and lack of physical attachment (or corralling, use of rails or cable system) of the mobile auxiliary crane.

(iii) The plan specifies the areas of the deck where the mobile auxiliary crane is permitted to be positioned, travel, and operate, and the parameters and limitations of such movements and operation.

(iv) The deck is marked to identify the permitted areas for positioning, travel, and operation.

(v) The plan specifies the dynamic and environmental conditions that must be present for use of the plan.

(vi) If the dynamic and environmental conditions in (f)(v) of this subsection are exceeded, the mobile auxiliary crane is attached physically or corralled in accordance with Option (1), Option (2) or Option (4) of (e) of this subsection.

(g) The barge, pontoons, vessel or other means of flotation used:

(i) Are structurally sufficient to withstand the static and dynamic loads of the crane/derrick when operating at the crane/derrick's maximum rated capacity with all anticipated deck loads and ballasted compartments.

(ii) Have a subdivided hull with one or more longitudinal watertight bulkheads for reducing the free surface effect.

(iii) Have access to void compartments to allow for inspection and pumping.

[Statutory Authority: RCW 49.17.010, 49.17.040, 49.17.050, 49.17.440, 49.17.060, and 29 C.F.R. 1926, Subpart CC. WSR 12-01-086, § 296-155-54400, filed 12/20/11, effective 2/1/12.]

WAC 296-155-54405 Dedicated pile drivers. (1) The provisions of Part L of this chapter apply to dedicated pile drivers, except as specified in this section.

(2) WAC 296-155-53412 (3)(d) (Anti two-blocking device) does not apply.

(3) WAC 296-155-53412 (3)(h) (Load weighing and similar devices) applies only to dedicated pile drivers manufactured after the effective date of this section.

[Statutory Authority: RCW 49.17.010, 49.17.040, 49.17.050, 49.17.440, 49.17.060, and 29 C.F.R. 1926, Subpart CC. WSR 12-01-086, § 296-155-54405, filed 12/20/11, effective 2/1/12.]

WAC 296-155-54410 Sideboom cranes. (1) The provisions of this standard apply, except WAC 296-155-53400 (34) (Ground conditions), WAC 296-155-53410 (Safety devices), WAC 296-155-53412 (Operational aids), WAC 296-155-531 through 296-155-53214 (crane certifier accreditation and crane certification) and WAC 296-155-53300 (Operator qualifications and certification).

(2) Sideboom cranes manufactured prior to the effective date of this section must meet the requirements of SAE J743a-1964. Sideboom cranes mounted on wheel or crawler tractors manufactured after the effective date of this section must meet the requirements of ASME B30.14-2010.

[Statutory Authority: RCW 49.17.010, 49.17.040, 49.17.050, 49.17.060 and chapter 49.17 RCW, and 29 C.F.R. 1926, Subpart CC. WSR 13-02-068, § 296-155-54410, filed 12/31/12, effective 2/1/13. Statutory Authority: RCW 49.17.010, 49.17.040, 49.17.050, 49.17.440, 49.17.060, and 29 C.F.R. 1926, Subpart CC. WSR 12-01-086, § 296-155-54410, filed 12/20/11, effective 2/1/12.]

WAC 296-155-547 Personnel lifting platforms (attached and suspended)—Scope. (1) This rule applies to the lifting, lowering, and transporting of personnel using personnel platforms connected to cranes or derricks that are designed under ASME B30 series. Personnel platforms can be suspended from the crane or derrick by wire rope, or attached to the boom of the crane or derrick. Using articulating boom cranes with suspended platforms is not allowed. The use of attached work platforms to the articulating boom crane must be approved by the crane manufacturer. Cranes and derricks are designed and intended for material handling, and are not required to meet the same design standards as manlifts, aerial lifts, bucket trucks, and other conventional personnel-lifting equipment. The lifting or lowering of personnel using material handling cranes and derricks is prohibited unless all of the applicable requirements of WAC 296-155-547 through 296-155-55405 are met. Digger derricks

must follow the requirements in ANSI/ASSE A10.31-2006 when hoisting personnel. Machines that are designed to both ASME B30 series and ANSI/SIA A92.2, Vehicle Mounted Elevating and Rotating Aerial Devices must follow the requirements in ANSI/SIA A92.2-2009 when hoisting personnel.

(2) The use of cranes or derricks to hoist employees is prohibited except where the employer demonstrates that the erection, use, and dismantling of conventional means of reaching the work area, such as a personnel hoist, ladder, stairway, aerial lift, elevating work platform, or scaffold, would be more hazardous, or is not possible because of the project's structural design or worksite conditions.

[Statutory Authority: RCW 49.17.010, 49.17.040, 49.17.050, 49.17.440, 49.17.060, and 29 C.F.R. 1926, Subpart CC. WSR 12-01-086, § 296-155-547, filed 12/20/11, effective 2/1/12.]

WAC 296-155-548 Design and installation requirements for personnel lifting systems.

[Statutory Authority: RCW 49.17.010, 49.17.040, 49.17.050, 49.17.440, 49.17.060, and 29 C.F.R. 1926, Subpart CC. WSR 12-01-086, § 296-155-548, filed 12/20/11, effective 2/1/12.]

WAC 296-155-54800 Design of platforms and suspension systems. (1) Employers that manufacture personnel platforms and/or their suspension systems must be designed, constructed and tested according to ASME B30.23-2005, Personnel Lifting Systems. The design and manufacturer's specifications must be made by a registered professional engineer. Personnel platforms manufactured prior to the effective of this section must comply with ASME B30.23-1998.

(2) Only the crane/derrick manufacturer may approve the design and installation procedures for platform mounting attachment points on lattice type boom cranes and lattice type boom extensions. The design and installation procedures, for platform mounting attachment points on other types of cranes/derricks must be approved by their manufacturer or an RPE. All approvals must be in writing.

(3) Platform mounting attachments on the crane/derrick must be designed to protect against disengagement during lifting operation.

(4) The system used to connect the personnel platform to the equipment must allow the platform to remain within ten degrees of level, regardless of boom angle.

(5) The suspension system must be designed to minimize tipping of the platform due to movement of employees occupying the platform.

(6) The personnel platform itself (excluding the guardrail system and personal fall arrest system anchorages), must be capable of supporting, without failure, its own weight and at least five times the maximum intended load.

(7) The personnel platform must be equipped with a guardrail system which meets the requirements of Part K of this chapter, and must be enclosed at least from the toeboard to mid-rail with either solid construction material or expanded metal having openings no greater than one-half inch (1.27 cm). Points to which personal fall arrest systems are attached must meet the anchorage requirements in Part K of this chapter.

(8) A grab rail must be installed inside the entire perimeter of the personnel platform except for access gates/doors.

(9) Access gates/doors. If installed, access gates/doors of all types (including swinging, sliding, folding, or other types) must:

(a) Not swing outward. If due to the size of the personnel platform, such as a one-person platform, it is infeasible for the door to swing inward and allow safe entry for the platform occupant, then the access gate/door may swing outward.

(b) Be equipped with a device that prevents accidental opening.

(10) Headroom must be sufficient to allow employees to stand upright in the platform.

(11) In addition to the use of hard hats, employees must be protected by overhead protection on the personnel platform when employees are exposed to falling objects. The platform overhead protection must not obscure the view of the operator or platform occupants (such as wire mesh that has up to one-half inch openings), unless full protection is necessary.

(12) All edges exposed to employee contact must be smooth enough to prevent injury.

(13) An identification plate must be located on the platform. The location must protect against damage and allow easy viewing from both interior (while hoisted) and exterior (while not hoisted) of the platform.

(14) The inspection plate must display the following information:

(a) Manufacturer's name and address;

(b) Platform rating in terms of weight and personnel;

(c) Platform identification number;

(d) Suspension system description for suspended platforms, or the intended crane/derrick manufacturer and model for boom attached platforms;

(e) Weight of the empty platform and its suspension system;

(f) Date the platform was manufactured;

(g) Certification of compliance to the design, construction, and testing requirements of ASME B30.23-2005, Personnel Lifting Systems;

(h) Listing of any unique operational environments for which the platform has been designed.

(15) For suspended platforms, the suspension system must be sized by the platform manufacturer, and its installed sling angle established, so as not to cause damage to the platform. Suspension systems must comply with the following:

(a) Hooks and other detachable devices.

(i) Hooks used in the connection between the hoist line and the personnel platform (including hooks on overhaul ball assemblies, lower load blocks, bridle legs, or other attachment assemblies or components) must be:

(A) Of a type that can be closed and locked, eliminating the throat opening.

(B) Closed and locked when attached.

(ii) Shackles used in place of hooks must be of the alloy anchor type, with either:

(A) A bolt, nut and retaining pin, in place; or

(B) Of the screw type, with the screw pin secured from accidental removal.

(iii) Where other detachable devices are used, they must be of the type that can be closed and locked to the same extent

as the devices addressed in subsection (a) of this section. Such devices must be closed and locked when attached.

(b) When a rope bridle is used to suspend the personnel platform, each bridle leg must be connected to a master link or shackle (see (a) of this subsection) in a manner that ensures that the load is evenly divided among the bridle legs.

(c) Eyes in wire rope slings shall be fabricated with thimbles.

(d) Wire rope sling suspension systems with pored socket end connections, if used, must be designed in accordance with the manufacturer's or qualified person's application instructions.

(e) All sling suspension systems must utilize a master link for attachment to the crane/derrick hook or bolt type shackle with cotter pin.

(f) Synthetic webbing or natural or synthetic fiber rope slings must not be used for suspension systems.

(g) Suspension system legs must be designed and sized according to ASME B30.23-2005.

(h) Wire rope sling suspension systems must have each leg of the system permanently marked with the rated load of the leg. The master link in the system must be permanently marked with the suspension system's rated load and identification as a personnel lifting platform suspension component.

(i) Rigging hardware (including wire rope, shackles, rings, master links, and other rigging hardware) and hooks must be capable of supporting, without failure, at least five times the maximum intended load applied or transmitted to that component. A sling made from rotation resistant rope is prohibited.

(j) Bridles and associated rigging for suspending the personnel platform must be used only for the platform and the necessary employees, their tools and materials necessary to do their work, and must not be used for any other purpose when not hoisting personnel.

(16) Overhead protection, when provided for a platform, must allow for a clear view of the crane/derrick components directly overhead, from any position in the platform. Any openings designed in the overhead protection must not allow a sphere of greater than 0.5 in (13 mm) to pass through.

(17) All welding of the personnel platform and its components must be performed by a certified welder familiar with the weld grades, types and material specified in the platform design.

(18) Bolted connections of load sustaining members or components of the platform must be in accordance with the AISC Specification for Structural Joints Using ASTM A 325 or A 490 Bolts.

(19) The incorporation of a weatherproof compartment suitable for storage of the operator's manual and assorted other documents, or a weatherproof placard displaying the operator's manual, and readable from the platform, when motion controls that are operational from the platform are installed must be provided.

(20) Motion controls, if installed on the platform, must:

(a) Be clearly identified as to their function;

(b) Be protected from inadvertent actuation;

(c) Be inside the platform and readily accessible to the operator;

(d) When possible be oriented and move in the approximate direction of the function that they control;

(e) Return to their neutral position and stop all motion when released.

(21) Boom motion controls, if provided, must additionally:

(a) Include a control that must be continuously activated for controls to be operational;

(b) Include an emergency stop control that does not require continuous actuation for a stop condition;

(c) Have motion controls, accessible at ground level, that can override platform controls.

[Statutory Authority: RCW 49.17.010, 49.17.040, 49.17.050, 49.17.440, 49.17.060, and 29 C.F.R. 1926, Subpart CC. WSR 12-01-086, § 296-155-54800, filed 12/20/11, effective 2/1/12.]

WAC 296-155-549 Personnel lifting hoisting equipment.

[Statutory Authority: RCW 49.17.010, 49.17.040, 49.17.050, 49.17.440, 49.17.060, and 29 C.F.R. 1926, Subpart CC. WSR 12-01-086, § 296-155-549, filed 12/20/11, effective 2/1/12.]

WAC 296-155-54900 Crane or derrick requirements for personnel lifting. (1) Cranes and derricks must meet the requirements in this part and the applicable crane/derrick ASME B30 volume in addition to the following requirements in this section.

(2) The following cranes/derricks must **not** be used to lift personnel:

(a) Articulating boom cranes, unless approved by the manufacturer;

(b) Cranes or derricks with pendant supported, jib type boom extensions without positive stops.

(3) The crane or derrick being used to hoist the personnel platform must meet the following requirements:

(a) Live boom or live load capabilities allowing free fall are removed for the period of personnel lifting;

(b) An operational anti two-block device or upper travel limit switch is installed on the hoisting systems;

(c) On cranes and derricks with variable angle booms there is a boom angle indicator that is clearly visible to the operator;

(d) Equipped with a boom hoist limiting device;

(e) Cranes with a luffing jib must be equipped with:

(i) A jib angle indicator, readily visible to the operator.

(ii) A jib hoist limiting device.

(f) Cranes with telescoping booms must have a boom length indicator, readable from the operator's station;

(g) Articulating cranes must be equipped with a properly functioning automatic overload protection device. Using articulating boom cranes with suspended platforms is **not** allowed. The use of attached work platforms to the articulating boom crane must be approved by the crane manufacturer;

(h) Has automatic brakes on the crane/derrick, so motions stop when the operating controls are released;

(i) Has a holding device, such as a load hold check valve, that will prevent uncontrolled movement of the crane/derrick if a system fails, on hydraulic or pneumatic systems;

(j) Has a way to prevent hydraulic or pneumatic outriggers or stabilizers, if these are a part of the crane/derrick, from retracting if the hydraulic or pneumatic line fails;

(k) The load line hoist drum must have a system, other than the load line hoist brake, which regulates the lowering

rate of speed of the hoist mechanism. This system or device must be used when hoisting personnel;

(l) Proper operation required. Personnel hoisting operations must not begin unless the devices listed in this section are in proper working order. If a device stops working properly during such operations, the operator must safely stop operations. Personnel hoisting operations must not resume until the device is again working properly. Alternative measures are not permitted.

(4) Direct attachment of a personnel platform to a luffing jib is prohibited.

(5) The base of the crane must be level in accordance with manufacturer's recommendations and in no case greater than one percent of level. The crane must be located on firm footing and a qualified person must determine that the footing is sufficiently firm and stable. Outriggers or stabilizers must be extended, blocked and locked according to manufacturer's recommendations, if the crane is equipped with them, the amount of the extension must be the same for all outriggers or stabilizers.

(6) The total weight of the lifted load, including rigging, platform, personnel, tools, and material must not exceed fifty percent of the crane's rated capacity for the radius and configuration, under the planned conditions of operations (except during testing as outlined in WAC 296-155-551).

(7) When the occupied personnel platform is in a stationary working position, the load and boom hoist brakes, swing brakes, and operator actuated secondary braking and locking features (such as pawls or dogs) or automatic secondary brakes must be engaged.

(8) The area must be inspected where the crane/derrick will be set up and look for:

(a) Overhead obstructions;

(b) Electrical lines;

(c) Hazardous locations;

(d) Inadequate surface area;

(e) Inadequate support to withstand all force imposed, wind, weather, and unstable conditions; and

(f) Other potentially hazardous conditions.

(9) Hooks on headache ball assemblies, lower load blocks, or other attachment assemblies must be of a type that can be closed and locked, eliminating the hook throat opening. Alternatively, an alloy anchor type shackle with a bolt, nut and retaining pin may be used.

[Statutory Authority: RCW 49.17.010, 49.17.040, 49.17.050, 49.17.440, 49.17.060, and 29 C.F.R. 1926, Subpart CC. WSR 12-01-086, § 296-155-54900, filed 12/20/11, effective 2/1/12.]

WAC 296-155-551 Inspections, maintenance and testing.

[Statutory Authority: RCW 49.17.010, 49.17.040, 49.17.050, 49.17.440, 49.17.060, and 29 C.F.R. 1926, Subpart CC. WSR 12-01-086, § 296-155-551, filed 12/20/11, effective 2/1/12.]

WAC 296-155-55100 Inspections on cranes and personnel platforms. (1) A qualified person must inspect personnel platforms before use and at each new job site to make sure the requirements of WAC 296-155-548 through 296-155-55305 are met.

(2) A qualified person must inspect all items in Table 9 at least once each day, before use.

(3) Any hazardous conditions must be corrected before using the platform.

(4) As applicable, perform a frequent inspection on the crane/derrick in accordance with WAC 296-155-53405.

(5) Dated inspection records for the crane and the personnel platform must be made and kept on file for the duration of the personnel lift operation.

Table 9
Inspection Checklist for Personnel Lifting Platforms

Items to check	How Often
Markings (all information legible) • Platform • Suspension system	Once each day, before use.
Structure • Load supporting welds/bolts • Load supporting members • Barrier from toe board to intermediate rail • Hand rail • Fall protection device anchorage points • Gate locking mechanisms • Platform flooring • Suspension attachment points	
Attachment mechanisms • Pins/ears/bolt-ups/eyes • Wire rope/chain/rigid leg • Master links	
Special purpose items (overhead protection, flotation, platform controls)	

(6) The platform must not be used until safety deficiencies identified during the inspection have been evaluated, corrected, and approved by a qualified person.

[Statutory Authority: RCW 49.17.010, 49.17.040, 49.17.050, 49.17.440, 49.17.060, and 29 C.F.R. 1926, Subpart CC. WSR 12-01-086, § 296-155-55100, filed 12/20/11, effective 2/1/12.]

WAC 296-155-55105 Adjustments and repairs on personnel platforms. (1) Any adjustments or repairs to the platform must be done by a qualified person.

(2) Adjustments or repairs to the suspension system must be done by a qualified person.

(3) Replacement parts and repairs must be equal to or exceed the original equipment specifications.

(4) The manufacturer or a qualified person must approve any modifications, in writing, before they are made.

(5) Records of any repairs to the structural components of the platform must be maintained and kept.

(6) All welding of the personnel platform and its components must be performed by a certified welder familiar with the weld grades, types and material specified in the platform design.

[Statutory Authority: RCW 49.17.010, 49.17.040, 49.17.050, 49.17.440, 49.17.060, and 29 C.F.R. 1926, Subpart CC. WSR 12-01-086, § 296-155-55105, filed 12/20/11, effective 2/1/12.]

WAC 296-155-55110 Proof load test platforms and rigging. (1) The platform and rigging must be proof load tested at each new location before lifting personnel. This may be done at the same time as the trial lift.

(a) Test as follows:

(i) Test to one hundred twenty-five percent of the platform's rated capacity.

(ii) The platform must be lowered by controlled load lowering, braked, and held in a suspended position for a minimum of five minutes with the test load evenly distributed on the platform.

(b) Do the following after proof load testing:

(i) A qualified person must inspect the platform and rigging to determine if the test has passed.

(ii) Any deficiencies that pose a safety hazard must be corrected prior to lifting personnel.

(iii) Another test must be performed after any deficiencies are corrected.

(c) Keep the most recent proof load testing records available at the job site.

(d) Personnel hoisting must not be conducted until a qualified person determines that the platform and rigging has successfully passed the proof load test.

(2) The platform and rigging must be proof load tested after any structural repair or modification, before lifting personnel.

(a) Test suspended platforms in the following order:

(i) Test to one hundred fifty percent of the platform's rated capacity;

(ii) The loaded platform must be raised, then lower it at a speed of at least one hundred ft/min;

(iii) Bring the platform to a stop by using the crane/derrick brakes;

(iv) The platform must hang for at least five minutes;

(v) A qualified person must inspect the platform and rigging;

(vi) Any deficiencies must be corrected;

(vii) Another test must be performed after any deficiencies are corrected.

(b) Test attached platforms in the following order:

(i) Test to one hundred twenty-five percent of the platform's rated capacity;

(ii) Hold the platform suspended for five minutes with the test load evenly distributed on the platform;

(iii) A qualified person must inspect the platform and rigging;

(iv) Any deficiencies must be corrected;

(v) Another test must be performed after any deficiencies are corrected.

(c) The most recent proof load testing records must be kept and available at the job site.

[Statutory Authority: RCW 49.17.010, 49.17.040, 49.17.050, 49.17.060 and chapter 49.17 RCW, and 29 C.F.R. 1926, Subpart CC. WSR 13-02-068, § 296-155-55110, filed 12/31/12, effective 2/1/13. Statutory Authority: RCW 49.17.010, 49.17.040, 49.17.050, 49.17.440, 49.17.060, and 29 C.F.R. 1926, Subpart CC. WSR 12-01-086, § 296-155-55110, filed 12/20/11, effective 2/1/12.]

WAC 296-155-55115 Trial lift. (1) A trial lift must be performed with the personnel platform, on each shift before lifting personnel, to check the following:

(a) Crane/derrick setup and configuration is correct;

(b) Load capacities are adequate;

(c) No hazardous interferences exist;

(d) The operator's operational competence.

(2) A trial lift with the unoccupied personnel platform loaded at least to the anticipated lift-weight must be made from ground level, or any other location where employees will enter the platform, to each location at which the platform is to be hoisted and positioned. Where there is more than one location to be reached from a single set-up position, either individual trial lifts for each location, or a single trial lift, in which the platform is moved sequentially to each location, must be performed; the method selected must be the same as the method that will be used to hoist the personnel.

(3) The trial lift must be repeated before lifting personnel whenever:

(a) The crane or derrick is moved and set up in a different location or returned to a previously used location;

(b) The crane or derrick is reconfigured;

(c) The operator is changed;

(d) The lift route has changed, unless the competent person determines that the new route presents no new factors affecting safety.

(4) A competent person must determine that:

(a) Safety devices and operational aids required by this section are activated and functioning properly. Other safety devices and operational aids must meet the requirements of WAC 296-155-53410 and 296-155-53412.

(b) Nothing interferes with the crane/derrick or the personnel platform in the course of the trial lift.

(c) The lift will not exceed fifty percent of the crane/derrick's rated capacity at any time during the lift.

(d) The load radius to be used during the lift has been accurately determined.

(5) Immediately after the trial lift, a competent person must:

(a) Conduct a visual inspection of the crane/derrick, base support or ground, and personnel platform, to determine whether the trial lift has exposed any defect or problem or produced any adverse effect.

(b) Confirm that, upon the completion of the trial lift process, the test weight has been removed.

(6) Immediately prior to each lift:

(a) The platform must be hoisted a few inches with the personnel and materials/tools on board and inspected by a competent person to ensure that it is secure and properly balanced.

(b) The following conditions must be determined by a competent person to exist before the lift of personnel proceeds:

(i) Hoist ropes must be free of deficiencies in accordance with WAC 296-155-53404.

(ii) Multiple part lines must not be twisted around each other.

(iii) The primary attachment must be centered over the platform.

(iv) If the load rope is slack, the hoisting system must be inspected to ensure that all ropes are properly seated on drums and in sheaves.

(7) Any condition found during the trial lift and subsequent inspection(s) that fails to meet a requirement of this standard or otherwise creates a safety hazard must be corrected before hoisting personnel.

[Statutory Authority: RCW 49.17.010, 49.17.040, 49.17.050, 49.17.060 and chapter 49.17 RCW, and 29 C.F.R. 1926, Subpart CC. WSR 13-02-068, § 296-155-55115, filed 12/31/12, effective 2/1/13. Statutory Authority: RCW 49.17.010, 49.17.040, 49.17.050, 49.17.440, 49.17.060, and 29 C.F.R. 1926, Subpart CC. WSR 12-01-086, § 296-155-55115, filed 12/20/11, effective 2/1/12.]

WAC 296-155-552 Employer responsibilities.

[Statutory Authority: RCW 49.17.010, 49.17.040, 49.17.050, 49.17.440, 49.17.060, and 29 C.F.R. 1926, Subpart CC. WSR 12-01-086, § 296-155-552, filed 12/20/11, effective 2/1/12.]

WAC 296-155-55200 Employer responsibilities for lifting personnel. (1) The employer must require that the provisions of this part are understood and applied at the operational levels and that the appropriate portions of this part are included in the prelift briefing information.

(2) The employer must:

(a) Assign an employee to function as the lift supervisor, see WAC 296-155-55205;

(b) Prepare a personnel lift plan containing at least the information shown in WAC 296-155-56410. This plan must be retained as part of the job site records;

(c) Verify the need for a personnel lift;

(d) Verify the crane/derrick to be used for the personnel lift;

(e) Authorize the personnel lift operation;

(f) Require the personnel lift be accomplished in accordance with the provisions of this part;

(g) Hold the prelift meeting prior to the trial lift at each new work location;

(h) Verify qualified persons are assigned to perform the functions of the personnel lift supervisor, operator, signal persons, riggers and tagline handlers, as applicable;

(i) Accomplish other tasks that may be needed to enhance the safety of the personnel lift;

(j) Require that all personnel associated with the lift receive the briefings and safety indoctrinations specified in this part. This prelift meeting must be attended by the crane/derrick operator, signal person (if used for the lift), employees to be hoisted, personnel lift supervisor and the person responsible for the task to be performed.

(3) The prelift meeting must cover, as a minimum:

(a) The requirements of the applicable portions of Part L in this chapter;

(b) Assignment and responsibilities of each person involved in the lift operation;

(c) The procedures to be followed;

(d) Guidance on general and specific safety precautions;

(e) Special signals for the operation;

(f) Unique considerations of the lift;

(g) Work to be accomplished during lift;

(h) If applicable, the responsibilities and assignments when lifting personnel near electrical power lines.

(4) If individuals are changed during a series of personnel lifts, each new person must be appropriately briefed by the employer.

(5) The employer must not allow or require any operator to lift personnel under the following conditions:

(a) The operator does not feel physically or mentally fit to perform the operation;

(b) The operator has been working for more than ten hours prior to the start of the lift, or the lift will not be completed before the operator has been working for twelve hours;

(c) The operator did not have at least eight hours off, immediately prior to the work shift containing the personnel lift operation.

(6) The employer must verify there are no less hazardous alternatives to performing the work or providing access to the area. The personnel lift must not be authorized when less hazardous means are feasible.

(7) The employer can only authorize personnel lifting over, under, or in the vicinity of power lines in accordance with the requirements of Figures 9, 10 and 11 and Table 10 in WAC 296-155-55305.

[Statutory Authority: RCW 49.17.010, 49.17.040, 49.17.050, 49.17.440, 49.17.060, and 29 C.F.R. 1926, Subpart CC. WSR 12-01-086, § 296-155-55200, filed 12/20/11, effective 2/1/12.]

WAC 296-155-55205 Responsibilities of the personnel lift supervisor. (1) The personnel lift supervisor must:

(a) Supervise the personnel lift operation;

(b) Verify all crane/derrick and platform inspections have been accomplished as outlined in this part;

(c) Inspect the area for potential hazards, any hazards found during this inspection must be reported to the employer prior to performing the personnel lift. This inspection must include, but not limited to:

(i) Excessive load and/or radius;

(ii) Overhead obstructions and electrical transmission lines;

(iii) Hazardous locations;

(iv) Inadequate surface and support to withstand all forces imposed;

(v) Wind, weather, and unstable conditions;

(vi) Any potentially hazardous conditions.

(d) Verify the base of the crane is level in accordance with manufacturer's recommendations and in no case greater than one percent of level;

(e) For crane/derrick with a boom-attached platform, verify that the platform is attached as specified by the platform manufacturer and crane/derrick manufacturer or qualified person;

(f) Not allow the total weight of the lifted load, including rigging, platform, personnel, tools, and material, to exceed fifty percent of the crane/derrick's rated load, under the planned conditions of operation (except during testing as outlined in WAC 296-155-55115).

(g) Not allow the platform's rating or the crane's/derrick's reduced rated load to be exceeded when loads are transferred to the hoisted platform.

(h) Verify a trial lift has been performed as outlined in WAC 296-155-55115.

(i) Verify that during the trial lift, the platform is loaded to at least the weight expected during the actual lift.

(j) Not allow the crane/derrick to travel with personnel in the personnel platform except when the crane/derrick runs on fixed rails or runways.

(k) Verify the platform is securely attached to the crane or derrick.

(l) Verify the load line is not attached to or wrapped around the platform.

(m) Verify boom-attached personnel platforms are attached according to manufacturer's specifications or a qualified person.

(n) Keep people from passing under the raised platform.

(o) Ensure there are no more people on the platform than are needed to do the job.

(2) The personnel lift supervisor must ensure the crane/derrick and platform manufacturer's information is consulted for specific instruction on the crane/derrick operation. The crane/derrick and platform operation instructions in this part are intended as minimum criteria.

(3) The personnel lift supervisor must ensure there are an appropriate number of signal persons, ground crew, and platform occupants to perform the personnel lift safely. In suspended and boom-attached platforms without boom motion controls, one occupant must be designated as the platform signal person. This person must be responsible for communicating with the operator and/or other designated signal persons.

[Statutory Authority: RCW 49.17.010, 49.17.040, 49.17.050, 49.17.440, 49.17.060, and 29 C.F.R. 1926, Subpart CC. WSR 12-01-086, § 296-155-55205, filed 12/20/11, effective 2/1/12.]

WAC 296-155-55210 Crane or derrick operation requirements for personnel lifting. (1) Before lifting personnel the following must be met:

(a) Operate crane/derrick with outriggers or stabilizers extended, blocked, and locked in accordance with the manufacturers' specifications;

(b) For crane/derrick that uses wire rope to hoist a personnel platform, verify that the crane/derrick has an anti two-block device or upper travel limit switch, installed and operational;

(c) Position the personnel platform so that it may be tied off to the structure to which the occupants are entering or leaving, if the platform cannot be landed during the entrance or exit of the occupants. If the platform has been tied off, the operator must not move the platform until it is verified that it is freely suspended;

(d) Not knowingly allow the platform load to exceed the platform rating, except during proof testing;

(e) Not travel the crane/derrick with personnel in the personnel platform except when they run on fixed rails or runways;

(f) Perform all movements of the platform or crane/derrick in a slow, controlled, cautious manner to minimize sudden movement of the platform;

(g) Engage the power-controlled lowering mechanism at all times the platform is occupied (no freefall);

(h) In the case of suspended or boom-mounted platforms, without controls, the operator must remain at the crane/derrick controls at all times when the platform is occupied;

(i) Reserved;

(j) Platforms with controls. Where the platform is equipped with controls, all of the following must be met at all times while the platform is occupied:

(i) The occupant using the controls in the platform must be a qualified person with respect to their use, including the safe limitations of the crane/derrick and hazards associated with its operation. See WAC 296-155-53300, Operator qualifications and certification.

(ii) The crane/derrick operator must be at a set of crane controls that include boom and swing functions of the crane, and must be on-site and in view of the crane/derrick and platform.

(iii) The platform operating manual must be in the platform or on the crane/derrick.

Note: If lowering, retracting, and rotating primary power source becomes inoperative, the crane/derrick operator is allowed to leave the controls.

(k) Set all brakes and locks on the crane/derrick after positioning of the personnel platform and before personnel perform any work;

(l) Move the platform under controlled conditions and under the direction of a qualified signal person or platform occupant(s);

(m) Not move platforms over, under, or in the vicinity of power lines unless the requirements of WAC 296-155-55305 are met;

(n) Not lift any other loads, on any other load lines, while conducting a personnel lift. When the crane/derrick has a boom-attached platform without controls, it must not be used for other lifting service;

(o) Factory-produced boom-mounted personnel platforms that incorporate a winch as original equipment: Loads are permitted to be hoisted by such a winch while employees occupy the personnel platform only where the load on the winch line does not exceed five hundred pounds and does not exceed the rated capacity of the winch and platform, and does not exceed fifty percent of the crane's rated capacity at the radius and configuration used;

(p) Not disable, or allow to be disabled, any crane/derrick safety device during a personnel lift;

(q) Hoist the platform at a speed suitable for the safety of the operation but in no case in excess of ninety feet/minute (30 m/minute) or 1.5 feet/second (0.5 m/second).

(2) The operator must not move the platform without a discernible or audible signal from a signal person.

[Statutory Authority: RCW 49.17.010, 49.17.040, 49.17.050, 49.17.060 and chapter 49.17 RCW, and 29 C.F.R. 1926, Subpart CC. WSR 13-02-068, § 296-155-55210, filed 12/31/12, effective 2/1/13. Statutory Authority: RCW 49.17.010, 49.17.040, 49.17.050, 49.17.440, 49.17.060, and 29 C.F.R. 1926, Subpart CC. WSR 12-01-086, § 296-155-55210, filed 12/20/11, effective 2/1/12.]

WAC 296-155-553 Lifting personnel. Lifting personnel on platforms with cranes or derricks must only be done if it is the only possible way to accomplish the work that needs to be done. See WAC 296-155-547.

[Statutory Authority: RCW 49.17.010, 49.17.040, 49.17.050, 49.17.440, 49.17.060, and 29 C.F.R. 1926, Subpart CC. WSR 12-01-086, § 296-155-553, filed 12/20/11, effective 2/1/12.]

WAC 296-155-55300 Personnel lifting requirements. (1) Conditions must provide clear visibility. When conditions such as darkness, fog, or snow prevent clear visibility, a personnel lift must not be performed.

(2) Personnel platforms cannot be used in winds (sustained or gusts) in excess of twenty mph (32.2 km/hr) or in electric storms, snow, ice, sleet, or other adverse weather conditions which could affect the safety of personnel.

(3) Other weather and environmental conditions. A qualified person must determine if, in light of indications of dangerous weather conditions, or other impending or existing danger, it is not safe to lift personnel. If it is not, the lifting operation must not begin (or, if already in progress, must be terminated).

(4) Personnel platforms must only be used for personnel, their tools, and sufficient material to do their work. They must not be used for solely transporting bulk materials.

(5) The number of employees occupying the personnel platform must not exceed the maximum number the platform was designed to hold or the number required to perform the work, whichever is less.

(6) A qualified person must evaluate the safety concerns of the operational environment and verify the platform and crane/derrick are suitable for use. Additionally, special work circumstances may require further precautions. Precautions such as, but not limited to, the following must be taken:

(a) When welding is to be accomplished from the personnel platform, suitable electrode holders must be provided to protect them from contact with any conducting components of the platform.

(b) Operators of cranes/derricks, installed on floating vessels, must be instructed not to lift personnel when the list or trim of the vessel exceeds five degrees. If a mobile crane/derrick is placed on floating vessels, operators must not lift personnel when the list or trim of the vessel exceeds one degree.

(c) Personnel fall protection devices with quick release features must be provided and required to be worn. The fall protection device must be appropriately attached while personnel are lifted over land and detached while personnel are lifted over water. See Part C-1 of this chapter for requirements for fall arrest system, including the attachment point (anchorage) used to comply with this subsection. When personnel lifts are conducted over water, U.S. Coast Guard approved (Type I, II, III, or V) personnel flotation devices must be provided and required to be worn.

(d) A boat/skiff with appropriate rescue personnel must be readily available at all times during a personnel lift over water.

(e) Appropriate personnel protective equipment must be provided and required to be used around toxic, flammable, or hazardous substances or fumes.

(f) Any concentrated loading of the platform must be reviewed to preclude the overstressing of any component or impairing the platform stability.

(g) Where the rotation of the platform, while hoisted, can create a hazard, appropriate restraining methods must be provided and required to be used.

(7) In order to safely perform the personnel lift, make sure the following are met:

(a) The personnel platform is **not** loaded with more than its rated load capacity;

(b) Materials and tools being lifted by a platform are:

(i) Secured to prevent movement;

(ii) Evenly distributed on the platform.

(c) The personnel platform is hoisted slowly, with no sudden movements;

(d) Tag lines are used to control the motion of suspended platforms, unless using them creates a hazard;

(e) The platform is secured to the structure where the work will be performed before employees exit or enter the platform, unless securing to the structure is unsafe;

(f) No other load lines on the crane or derrick are used to lift anything while personnel are on a platform;

(g) Brakes and locking devices are engaged when the personnel platform is occupied and in a stationary working position;

(h) The lowering motion of the hoist line and/or the boom is power-controlled only. Free fall is **not** allowed;

(8) The platform operation instructions in this rule are intended as minimum criteria. The platform manufacturer's information must be consulted for specific instruction on the platform's operation.

(9) Traveling.

(a) Rubber tired cranes are not allowed to travel while lifting personnel. Hoisting of employees while the crane is traveling is only allowed when:

(i) The crane travels on fixed rails; or

(ii) The crane has crawlers and is on a runway, and the employer demonstrates that there is no less hazardous way to perform the work.

(b) Where employees are hoisted while the crane is traveling, the following criteria must be met:

(i) Crane travel must be restricted to a fixed track or runway.

(ii) Where a runway is used, it must be a firm, level surface designed, prepared and designated as a path of travel for the weight and configuration of the crane/derrick being used to lift and travel with the personnel platform. An existing surface may be used as long as it meets these criteria.

(iii) Travel must be limited to boom length.

(iv) The boom must be parallel to the direction of travel, except where it is safer to do otherwise.

(v) A complete trial run must be performed to test the route of travel before employees are allowed to occupy the platform. This trial run can be performed at the same time as the trial lift required by WAC 296-155-55115 which tests the lift route.

(10) Derricks are prohibited from traveling while personnel are hoisted.

(11) Platform occupants must remain in continuous sight or in communication with the operator and in sight and communication of a signal person.

(12) Platform occupants must use personnel protective equipment, such as hard hats, safety glasses, hearing protection, and gloves, in conditions where a hazard of injury exists.

(13) Platform occupants must wear personnel fall protection devices with lanyards attached to a specific anchorage point(s), unless special work circumstance requirements dictate otherwise, such as working over water.

(14) Platform occupants must keep all parts of the body inside the platform during raising, lowering, and horizontal movement. This provision does not apply to an occupant of the platform when necessary to position the platform or while performing the duties of a signal person.

(15) Platform occupants must not stand, sit on, or work from the top rail, intermediate rail, toe board, or use any other device to enhance their vertical height working capability.

(16) Platform occupants must not pull the platform out of plumb in relation to the crane/derrick.

(17) Platform occupants must not enter or exit a suspended platform while it is raised unless the platform has an installed gate and is physically secured to the structure to which the occupants are entering or exiting unless the employer can demonstrate that securing to the structure would create a greater hazard.

(18) Platform occupants must not operate a platform with motion controls without the platform operation manual available in the platform.

(19) If the platform is tied to the structure, the operator must not move the platform until the operator receives confirmation that it is freely suspended.

(20) The platform must be inspected prior to each lift to verify all attachments and the platform are safe to use.

(21) Verify the platform is evenly loaded, material secured, and the total platform weight does not exceed the platform rating or the reduced crane/derrick lift capacity.

(22) Communication requirements.

(a) Hand signals to the operator must be in accordance with the applicable crane/derrick portion of this part.

(b) Signals must be discernable or audible to the operator.

(c) Hand signals must be posted conspicuously at the following locations:

(i) On the crane/derrick as required by this part.

(ii) Inside the personnel platform.

(iii) At any platform motion control locations.

(d) Some operations may require additions to or modifications of standard signals.

(i) Any special signals must be agreed upon and understood by the signal persons and crane/derrick operator.

(ii) Special signs must not conflict with the crane/derrick standard signals.

(e) No response must be made unless signals are clearly understood.

(f) If communications between operator and platform occupants are disrupted, all operations must be stopped until communication is reestablished.

(g) Communication systems to be used during the lift must be verified as functioning and effective prior to commencing the lift.

Note: If radios or other electronic means of communication are used, they should operate on a secure channel.

[Statutory Authority: RCW 49.17.010, 49.17.040, 49.17.050, 49.17.060 and chapter 49.17 RCW, and 29 C.F.R. 1926, Subpart CC. WSR 13-02-068, § 296-155-55300, filed 12/31/12, effective 2/1/13. Statutory Authority: RCW 49.17.010, 49.17.040, 49.17.050, 49.17.440, 49.17.060, and 29 C.F.R. 1926, Subpart CC. WSR 12-01-086, § 296-155-55300, filed 12/20/11, effective 2/1/12.]

WAC 296-155-55305 Lifting personnel near electrical power lines. (1) It is recognized that lifting personnel where the crane/derrick or platform can become electrified from electric power lines is an extremely hazardous practice. It is required to perform the lift so there is no possibility of the crane/derrick, load line, or personnel platform becoming a conductive path. Cranes/derricks must not be used to lift personnel under electric power lines if any combination of boom, personnel platform, load line, and machine component will enter the prohibited zone. (See Table 10.) Lifting personnel near electric lines is not allowed unless there is no less hazardous way to do the job. The three situations to consider, and take steps to establish, when lifting personnel near electric power lines are:

Table 10

Condition	Situation
A	Power lines are deenergized and grounded as shown in Figure 9. (This is the safest and preferred condition.)
B	Power lines are energized with the crane/derrick outside the prohibited zone, but there is a potential for the crane/derrick or platform being energized as shown in Figure 10.
C	Power lines are energized with the crane/derrick inside the prohibited zone, and there is a possibility that the crane/derrick or platform can become energized as shown in Figure 11. (Lifting personnel in this condition is prohibited.)

(2) **Condition A.** This is the preferred condition under which a personnel lift can be performed. The hazard of injury or death due to electrocution has been removed. The following steps must be taken when lifting personnel in a Condition A situation:

(a) The power company or owner of the power lines must deenergize the lines.

(b) The power lines must be visibly grounded to avoid the possibility of electrical feedback.

(c) A qualified representative of the owner of the power lines or a designated representative of the electric utility must be on the site to verify that steps (a) and (b) of this subsection have been completed and that the power lines are not energized.

(d) Durable signs must be installed at the operator's station and on the outside of the crane warning that electrocution or serious bodily injury may occur unless the minimum clearance of twenty feet is maintained between the crane/derrick and platform and power lines up to 350 kV or fifty feet of a power line that is over 350 kV. These signs must be posted at the crane/derrick operating station, on the outside of the crane/derrick, and inside the personnel platform.

(e) If proximity warning devices, insulated links, or boom cages are used, they must not be a substitute for any of the requirements of this section. If these devices are used, the crane/derrick operator, ground crew, and platform occupants must be instructed by management on the limitations of the devices, operating condition requirements of the devices, and

the devices' testing requirements prescribed by the device manufacturer.

(3) **Condition B.** The following steps must be taken when lifting personnel in a Condition B situation:

(a) A meeting, on the job site, between the job site management and either a qualified representative of the owner of the power lines or the electric utility must take place. Procedures to safely complete the lift must be established.

(b) Hoisting personnel within twenty feet of a power line that is up to 350 kV, and hoisting personnel within fifty feet of a power line that is over 350 kV, is prohibited, except for work covered by chapter 296-45 WAC, safety standards for electrical workers and performed by qualified personnel.

(c) Power line movement, horizontal and vertical, due to wind must be added to the distances specified in (b) of this subsection. A qualified representative of the power line owner or a designated representative of the electric utility must be consulted for the movement distances.

(d) The required clearances to the power lines must be continuously monitored by a dedicated and qualified signal person in constant communication with the crane/derrick operator.

(e) Personnel platform movement restraint, when required, must be done through electrically nonconductive tag lines.

(f) No person outside the personnel platform must be permitted to touch the crane/derrick, load line, or platform unless the signal person identified in (d) of this subsection indicates it is safe.

(g) Durable signs must be posted warning that electrocution or serious bodily injury may occur unless the minimum clearance specified in (b) of this subsection is maintained between the crane/derrick and platform and power lines. These signs must be posted at the crane/derrick operating station, on the outside of the crane/derrick, and inside the personnel platform.

(h) If proximity warning devices, insulated links, or boom cages are used, they must not be a substitute for any of the requirements of this section. If these devices are used, the crane/derrick operator, ground crew, and platform occupants must be instructed by management on the limitations of the devices, operating condition requirements of the devices, and the devices' testing requirements prescribed by the device manufacturer.

(4) **Condition C.** Lifting personnel under Condition C is prohibited.

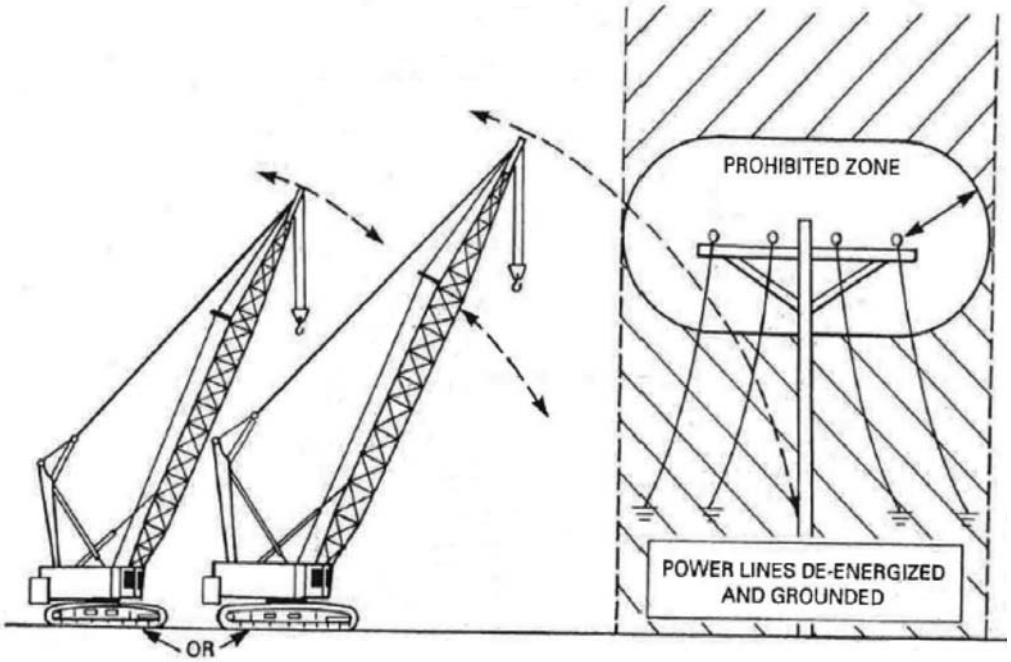

Condition A (see Table 10)
Figure 9

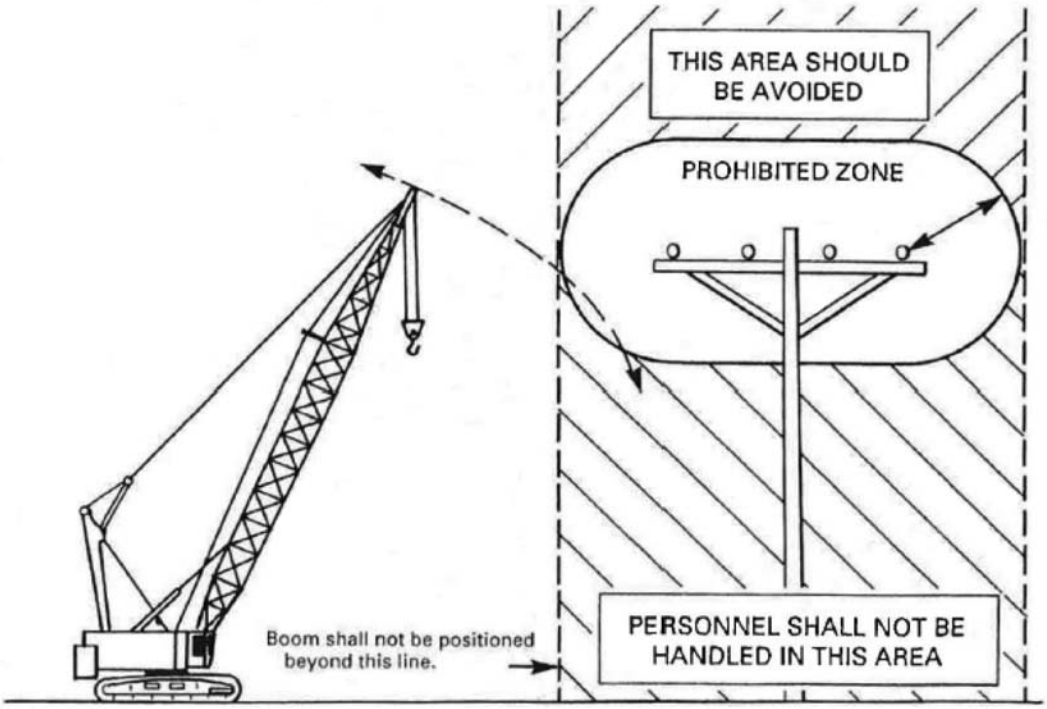

Condition B (see Table 10)
Figure 10

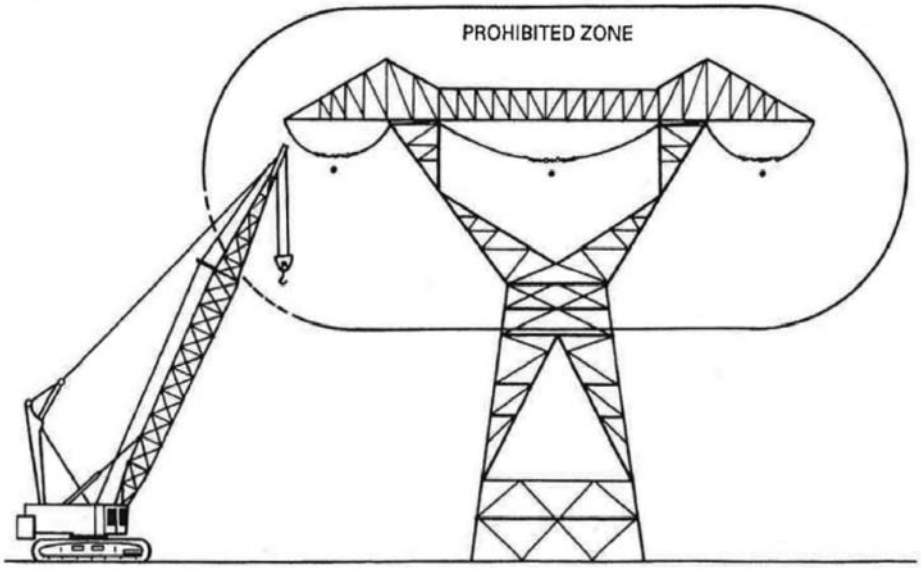

Condition C (see Table 10)
This Condition is Prohibited
Figure 11

[Statutory Authority: RCW 49.17.010, 49.17.040, 49.17.050, 49.17.440, 49.17.060, and 29 C.F.R. 1926, Subpart CC. WSR 12-01-086, § 296-155-55305, filed 12/20/11, effective 2/1/12.]

WAC 296-155-554 Boatswain's chairs.

[Statutory Authority: RCW 49.17.010, 49.17.040, 49.17.050, 49.17.440, 49.17.060, and 29 C.F.R. 1926, Subpart CC. WSR 12-01-086, § 296-155-554, filed 12/20/11, effective 2/1/12.]

WAC 296-155-55400 Use boatswain's chairs as a last resort. (1) Boatswain's chairs must only be used when it is not possible to accomplish the task in a less hazardous way.

(2) Follow all applicable requirements in this part for the use of boatswain chairs.

(3) The chair must be capable of supporting its own weight and at least five times the maximum intended load.

(4) Boatswain's chair tackle must consist of correct size ball bearings or bushed blocks containing safety hooks and properly "eye-spliced" minimum five-eighths inch (1.6 cm) diameter first-grade manila rope, or other rope which will satisfy the criteria (e.g., strength and durability) of manila rope.

(5) Boatswain's chair seat slings must be a minimum of five-eighths inch (1.6 cm) diameter fiber, synthetic, or other rope which will satisfy the criteria (e.g., strength, slip resistance, durability, etc.) of first-grade manila rope.

(6) Boatswain's chair seat slings must be reeved through four corner holes in the seat; must cross each other on the underside of the seat; and must be rigged so as to prevent slippage which could cause an out-of-level condition.

(7) Hooks on headache ball assemblies, lower load blocks, or other attachment assemblies must be of a type that can be closed and locked, eliminating the hook throat opening. Alternatively, an alloy anchor type shackle with a bolt, nut and retaining pin may be used.

[Statutory Authority: RCW 49.17.010, 49.17.040, 49.17.050, 49.17.440, 49.17.060, and 29 C.F.R. 1926, Subpart CC. WSR 12-01-086, § 296-155-55400, filed 12/20/11, effective 2/1/12.]

WAC 296-155-55405 Lifting personnel using a boatswain's chair. (1) The boatswain's chair must not be loaded in excess of its rated load capacity.

(2) The boatswain's chair must only be used for employees, their tools, and the materials necessary to do their work. Do not use the chair to hoist materials or tools without hoisting employees.

(3) Materials and tools must be secured during lift.

(4) A signal person must be assigned any time the lift will take the employee out of the direct sight of the crane operator.

(5) The employee being lifted must use personal fall protection equipment, including a full body harness with the lanyard attached independent of the chair. The lanyard must be secured to the lift line above the headache ball or to the crane hook itself.

(6) Only one employee can be lifted at a time.

(7) The operator must:

(a) Lift the chair in a slow, controlled manner with no sudden movements;

(b) Remain at the crane/derrick controls at all times when the chair is occupied.

(8) All brakes and locking features must be engaged when the occupied chair is in a stationary working position.

(9) Operations must be stopped if any safety device quits working properly during the use of the boatswain's chair.

(10) The safety device must be repaired before resuming operations. Alternative measures are not permitted.

(11) Any other lifting on the crane/derrick's load lines is prohibited while personnel are suspended in a chair.

[Statutory Authority: RCW 49.17.010, 49.17.040, 49.17.050, 49.17.440, 49.17.060, and 29 C.F.R. 1926, Subpart CC. WSR 12-01-086, § 296-155-55405, filed 12/20/11, effective 2/1/12.]

WAC 296-155-556 Rigging—General requirements.

[Statutory Authority: RCW 49.17.010, 49.17.040, 49.17.050, 49.17.060 and chapter 49.17 RCW, and 29 C.F.R. 1926, Subpart CC. WSR 13-02-068, § 296-155-556, filed 12/31/12, effective 2/1/13. Statutory Authority: RCW 49.17.010, 49.17.040, 49.17.050, 49.17.440, 49.17.060, and 29 C.F.R. 1926, Subpart CC. WSR 12-01-086, § 296-155-556, filed 12/20/11, effective 2/1/12.]

WAC 296-155-55600 General requirements. (1) Employers must use at least one qualified rigger as follows:

(a) During hoisting activities for assembly and disassembly work (WAC 296-155-53402 (19)(a));

(b) Whenever employees are engaged in hooking, unhooking, or guiding a load, or in the initial connection of a load to a component or structure, and are within the fall zone (WAC 296-155-53400 (43)(c)).

Note: See qualified rigger requirements located in WAC 296-155-53306 of this part.

(2) All slings in use must meet the applicable requirements for design, inspection, construction, testing, maintenance and operation as prescribed in ASME B30.9-2010.

(3) All rigging hardware in use must meet the applicable requirements for design, inspection, construction, testing, maintenance and operation as prescribed in ASME B30.26-2010.

(4) All rigging gear must be used in accordance with the manufacturer's recommendations or a qualified person.

(5) All below-the-hook lifting devices in use must meet the applicable requirements for design, inspection, construction, testing, maintenance and operation as prescribed in ASME B30.20-2010.

(6) All hooks in use must meet the applicable requirements for design, inspection, construction, testing, maintenance and operation as prescribed in ASME B30.10-2009.

(7) Repair of hooks must be approved by the manufacturer or qualified person and as follows:

(a) Cracks, nicks, and gouges may be repaired by a competent person, all other repairs are done by the manufacturer or a qualified person;

(b) Grind longitudinally, following the contour of the hook;

(c) Do not reduce the dimension of the hook more than ten percent from the original.

(8) Hooks must not be modified by welding and/or drilling unless written approval by the manufacturer has been received.

(9) Special custom design grabs, hooks, clamps, or other lifting accessories, for such units as modular panels, prefabricated structures and similar materials, must be marked to indicate the safe working loads and must be proof tested prior to use to one hundred and twenty-five percent of their rated load.

(10) A qualified person must inspect the rigging equipment before each day or shift and:

(a) Consider the application the equipment will be used for, and determine if it's safe for use;

(b) Remove the equipment from service if using it will create a hazard or meets any of the removal criteria listed in this chapter.

(11) The rated load of the rigging equipment must not be exceeded.

(12) All rigging hardware must have permanently affixed and legible identification markings as prescribed by

the manufacturer that indicate the recommended safe working load.

(13) All rigging hardware must be inspected in accordance with Table 11, each day before using. If a daily inspection is not feasible because the hardware is in a semipermanent or inaccessible location, a periodic inspection is allowed instead of daily.

(14) Rigging hardware must be removed from service when it shows any conditions listed in Table 11, or any other hazardous condition.

Table 11
Rigging Hardware Inspection/Removal Criteria

For all hardware, inspect for the following:
Missing or illegible identification.
Indications of heat damage, including weld spatter or arc strikes.
Excessive pitting or corrosion.
Load bearing components that are: • Bent; • Twisted; • Distorted; • Stretched; • Elongated; • Cracked; • Broken.
Excessive nicks or gouges.
10% reduction of the original or catalog dimension at any point.
Excessive thread damage or wear, where applicable.
Evidence of unauthorized welding or modification.
Any other conditions that cause doubt as to the safety of continued use.
On **shackles,** also inspect for incomplete pin engagement.
On **swivels and swivel hoist rings,** check for lack of ability to freely rotate or pivot.
On **compression hardware,** also check for: Unauthorized replacement components; Insufficient number of wire rope clips; Improperly tightened wire rope clips; Damaged wire rope; Indications of wire rope slippage; Improper assembly.
On **swivels,** check for loose or missing nuts, bolts, cotter pins, snap rings, or other fasteners and retaining devices.
On **blocks** check for: • Loose or missing nuts, bolts, cotter pins, snap rings, or other fasteners and retaining devices; • Misalignment or wobble in sheaves; • Excessive sheave groove corrugation or wear.

(15) Any alteration or modification of rigging hardware must be in accordance with the hardware manufacturer or a qualified person and proof load tested to one hundred twenty-five percent. This test must be documented and available upon request.

(16) Welding of rigging hardware is prohibited unless authorized by the manufacturer or an RPE.

(17) Replacement parts must meet or exceed the original rigging hardware manufacturer's specifications.

(18) Rigging hardware selection must have the characteristics suitable for the application and environment where it will be used.

(19) Workers must keep all parts of their body from between the load and any rigging during the lift.

(20) If handling intermodal shipping containers at a construction site, the employer must follow the requirements in chapter 296-56 WAC, longshore, stevedore and waterfront related operations, Part F, Specialized terminals and the guidelines found in International Organization for Standardization (ISO) 3874 - Series 1 Freight Containers, fifth edition - Handling and Securing.

[Statutory Authority: RCW 49.17.010, 49.17.040, 49.17.050, 49.17.060 and chapter 49.17 RCW, and 29 C.F.R. 1926, Subpart CC. WSR 13-02-068, § 296-155-55600, filed 12/31/12, effective 2/1/13. Statutory Authority: RCW 49.17.010, 49.17.040, 49.17.050, 49.17.440, 49.17.060, and 29 C.F.R. 1926, Subpart CC. WSR 12-01-086, § 296-155-55600, filed 12/20/11, effective 2/1/12.]

WAC 296-155-558 Slings.

[Statutory Authority: RCW 49.17.010, 49.17.040, 49.17.050, 49.17.440, 49.17.060, and 29 C.F.R. 1926, Subpart CC. WSR 12-01-086, § 296-155-558, filed 12/20/11, effective 2/1/12.]

WAC 296-155-55800 Chain slings. (1) Only use chain slings that are made from grade eighty or higher alloy steel chain.

(2) The following requirements must be met if manufacturing your own chain slings:

(a) Have a design factor of four;

(b) Meet the rated load requirements in subsection (9) of this section.

(3) Rate chain slings with the load capacity of the lowest rated component of the sling. For example, if you use fittings that are rated lower than the sling material itself, identify the sling with the lower rated capacity.

(4) Makeshift fittings, such as hooks or links formed from bolts, rods, or other parts are prohibited.

(5) All chain slings must have legible identification information attached to the sling which includes the following information:

(a) Name or trademark of the manufacturer;

(b) Grade;

(c) Nominal chain size;

(d) Number of legs;

(e) Rated loads for the vertical hitch and bridle hitch and the angle upon which it is based;

(f) Length (reach);

(g) Individual sling identification (e.g., serial numbers);

(h) Repairing agency, if the sling was ever repaired.

(6) Inspections.

(a) A qualified person must inspect chain slings before their initial use, according to Table 12, both:

(i) When the sling is new; and

(ii) Whenever a repair, alteration, or modification has been done.

(b) A qualified person must perform a visual inspection for damage, each day or shift the chain sling is used. Immediately remove from service any sling damaged beyond the criteria in Table 12.

(c) A qualified person must perform periodic inspections on chain slings according to Table 12.

(i) Each link and component must be examined individually, taking care to expose and examine all surfaces including the inner link surfaces.

(ii) Remove slings from use:

• If any of the conditions in Table 12 are found;

• When they have been exposed to temperatures above one thousand degrees Fahrenheit.

(d) A written record of the most recent periodic inspection must be kept, including the condition of the sling.

Note: An external code mark on the sling is an acceptable means of recording the inspection as long as the code can be traced back to a record.

Table 12
Chain Sling Inspection/Removal Criteria

Inspect alloy steel chain slings for the following conditions:	Perform inspections:
• Missing or illegible sling identification.	
• Cracks or breaks.	
• Excessive nicks, gouges, or wear beyond that allowed in Table 13, Minimum Allowable Thickness at Any Point on a Link.	• At least once a year for slings in normal service, which means use within the rated load.
• Stretched chain links or components.	• At least once a quarter for slings in severe service, which involves abnormal operating conditions.
• Bent, twisted or deformed chain links or components.	• As recommended by a qualified person for slings in special service, which is anything other than normal or severe.
• Evidence of heat damage.	
• Excessive pitting or corrosion.	
• Inability of chain or components to hinge (articulate) freely.	
• Weld spatter.	
• Hooks that have any of the following conditions:	
– Any visibly apparent bend or twist from the plane of the unbent hook;	
– Any distortion causing an increase in throat opening of five percent, not to exceed one-quarter inch, or as otherwise recommended by the manufacturer;	
– Wear exceeding ten percent of the original section dimension of the hook or its load pin, or as otherwise recommended by the manufacturer;	
– A self-locking mechanism that does not lock (if applicable);	
– Any latch that does not close the hook's throat (if applicable).	
• Other visible damage that raises doubt about the safety of the sling.	

Table 13
Minimum Allowable Thickness at Any Point on a Link

Nominal chain or coupling link size		Minimum allowable thickness at any point on the link	
Inches	Millimeters	Inches	Millimeters
7/32	5.5	0.189	4.80
9/32	7	0.239	6.07
5/16	8	0.273	6.93
3/8	10	0.342	8.69
1/2	13	0.443	11.26
5/8	16	0.546	13.87
3/4	20	0.687	17.45
7/8	22	0.750	19.05
1	26	0.887	22.53
1 1/4	32	1.091	27.71

(7) Repair, alterations, or modifications.

(a) Chain slings must be repaired as follows:

(i) Slings must only be repaired by the manufacturer or a qualified person;

(ii) Chain used for sling repair must be alloy steel chain manufactured and tested in accordance with ASTM A 391/A

391M for Grade 80 chain and ASTM A 973/A 973M for Grade 100 chain;

(iii) Components for alloy steel chain slings must be manufactured and tested in accordance with ASTM A 952/A 952M;

(iv) The use of mechanical coupling links within the body of a chain sling to connect two pieces of chain is prohibited;

(v) Replace cracked, broken, or bent chain links or components instead of repairing them.

(b) The sling must be marked to show the repairing agency.

(c) Repaired slings must be proof tested according to the requirements in subsection (8) of this section. If only replacing components of the sling, and the components were individually proof tested, the sling does not have to be tested as a whole.

Note: For additional requirements relating to repair and modification see WAC 296-155-55600(9).

(8) Proof test chain slings. Prior to initial use, all new and repaired chain and components of an alloy steel chain sling, either individually or as an assembly must be proof tested by the sling manufacturer or a qualified person. Follow the requirements in Table 14, Chain Sling Proof Load Requirements.

Table 14
Chain Sling Proof Load Requirements

When proof testing this type of equipment:	Then proof load:
• Single or multiple leg slings. • Components attached to single legs.	Each leg and component to at least two times the single leg vertical hitch rated load.
• Master links for double leg bridle slings. • Single basket slings. • Master coupling links connected to two legs.	To at least four times the single leg vertical hitch rated load.
• Master links for triple and quadruple leg bridle slings. • Double basket bridle sling.	To at least six times the single leg vertical hitch rated load.

(9) Chain slings rated loads, the term "working load limit" is commonly used to describe rated load.

Note: Rated loads are based on the following factors:
- Strength of sling materials;
- Design factor;
- Type of hitch;
- Angle of loading.

(a) Chain slings must be used within the rated loads shown in Tables 1 through 4 of ASME B30.9-2010. For angles that are not shown in these tables, either use the rated load for the next lower angle or one calculated by a qualified person.

(b) The use of horizontal sling angles less than thirty degrees are prohibited, unless recommended by the sling manufacturer or a qualified person. See Figure 12, Multiple-Leg Bridle Sling Hitch.

(c) Rated loads must be verified for slings used in a choker meet the values shown in the above referenced tables provided that the angle of choke is one hundred and twenty degrees or greater. See Figure 13, Single-Leg Choker Hitch.

(d) Rated loads for angles of choke less than one hundred twenty degrees must be determined by the manufacturer or a qualified person.

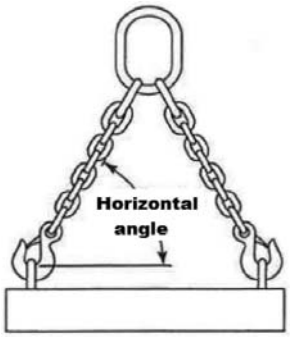

Figure 12
Multiple-Leg Bridle Sling Hitch

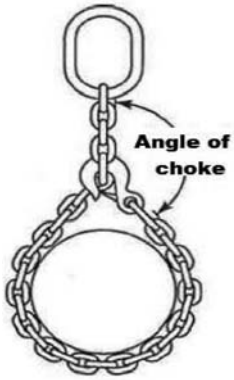

Figure 13
Single-Leg Choker Hitch

(10) Use of chain slings.

(a) Shorten or adjust slings using only methods approved by the manufacturer or a qualified person.

(b) Slings must not be shortened or lengthened by knotting or twisting.

(c) Twisting and kinking must be avoided.

(d) Hitch slings in a way that provides control of the load.

(e) Balance the load in slings used in a basket hitch to prevent it from slipping.

(f) Slings must be protected from sharp edges of the load. See Figure 14.

(g) The sling must be prevented from snagging anything during the lift, with or without load.

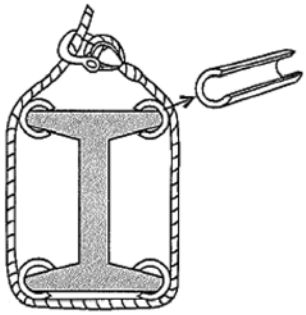

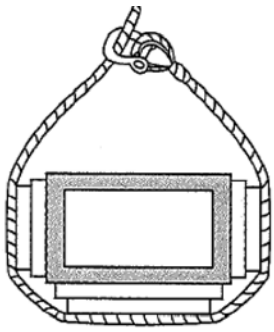

Softeners can be made from split pipe, padding or blocking

Figure 14
Softeners

[Statutory Authority: RCW 49.17.010, 49.17.040, 49.17.050, 49.17.440, 49.17.060, and 29 C.F.R. 1926, Subpart CC. WSR 12-01-086, § 296-155-55800, filed 12/20/11, effective 2/1/12.]

WAC 296-155-55805 Wire rope slings. (1) Manufacturing wire rope slings.

(a) Wire rope slings must be made from new or unused regular lay wire rope. The wire rope must be manufactured and tested in accordance with ASTM A 1023-02 and ASTM A 586.

(b) The following fabrication methods must be used to make wire rope slings:

(i) Hand splicing;

(ii) Turnback eye;

(iii) Return loop;

(iv) Flemish eye mechanical splicing;

(v) Poured or swaged socketing.

(c) Wire rope slings must have a design factor of five.

(d) Wire rope slings must meet the requirements in Table 16.

(e) Using any of the following when making wire rope slings is prohibited:

(i) Rotation resistant wire rope;

(ii) Malleable cast iron clips;

(iii) Knots;

(iv) Wire rope clips, unless:

• The application of the sling prevents using prefabricated slings;

• The specific application is designed by a qualified person.

(f) Wire rope clips, if used, must be installed and maintained in accordance with the recommendations of the clip manufacturer or a qualified person, or in accordance with the provisions of ASME B30.26-2010.

(g) Slings made with wire rope clips must not be used as a choker hitch.

Note: If using wire rope clips under these conditions, follow the guidance given in Table 15.

Table 15

Number, Torque Values, and Turn Back Requirements for U-Bolt Wire Rope Clips				Number, Torque Values and Turn Back Requirements for Double Saddle (Fist Grip) Wire Rope Clips			
Clip & Wire Rope Size (inches)	**Min. No. of Clips**	**Amount of Rope Turn Back in Inches**	***Torque in Ft. Lbs.**	**Clip & Wire Rope Size (inches)**	**Min. No. of Clips**	**Amount of Rope Turn Back in Inches**	***Torque in Ft. Lbs.**
1/8	2	3-1/4	4.5	3/16-1/4	2	4	30
3/16	2	3-3/4	7.5	5/16	2	5	30
1/4	2	4-3/4	15	3/8	2	5-1/4	45
5/16	2	5-1/4	30	7/16	2	6-1/2	65
3/8	2	6-1/2	45	1/2	3	11	65
7/16	2	7	65	9/16	3	12-3/4	130
1/2	3	11-1/2	65	5/8	3	13-1/2	130
9/16	3	12	95	3/4	4	16	225
5/8	3	12	95	7/8	4	26	225

Number, Torque Values, and Turn Back Requirements for U-Bolt Wire Rope Clips				Number, Torque Values and Turn Back Requirements for Double Saddle (Fist Grip) Wire Rope Clips			
Clip & Wire Rope Size (inches)	Min. No. of Clips	Amount of Rope Turn Back in Inches	*Torque in Ft. Lbs.	Clip & Wire Rope Size (inches)	Min. No. of Clips	Amount of Rope Turn Back in Inches	*Torque in Ft. Lbs.
3/4	4	18	130	1	5	37	225
7/8	4	19	225	1-1/8	5	41	360
1	5	26	225	1-1/4	6	55	360
1-1/8	6	34	225	1-3/8	6	62	500
1-1/4	7	44	360	1-1/2	7	78	500
1-3/8	7	44	360				
1-1/2	8	54	360				
1-5/8	8	58	430				
1-3/4	8	61	590				
2	8	71	750				
2-1/4	8	73	750				
2-1/2	9	84	750				
2-3/4	10	100	750				
3	10	106	1200				
3-1/2	12	149	1200				

*The tightening torque values shown are based upon the threads being clean, dry, and free of lubrication.

Table 16
Wire Rope Sling Configuration Requirements

If you have:	Then you need:
• Slings made of rope with 6x19 and 6x36 classification. • Cable laid slings.	A minimum clear length of rope ten times the rope diameter between splices, sleeves, or end fittings (see Figure 15, Minimum Sling Length) unless approved by a qualified person.
• Braided slings.	A minimum clear length of rope forty times the component rope diameter between the loops or end fittings (see Figure 16, Minimum Braided Sling Length) unless approved by a qualified person.
• Grommets and endless slings.	A minimum circumferential length of ninety-six times the body diameter of the grommet or endless sling unless approved by a qualified person.
• Other configurations.	Specific limitation data provided by a qualified person. These slings must meet all other requirements of ASME B30.9-2010.

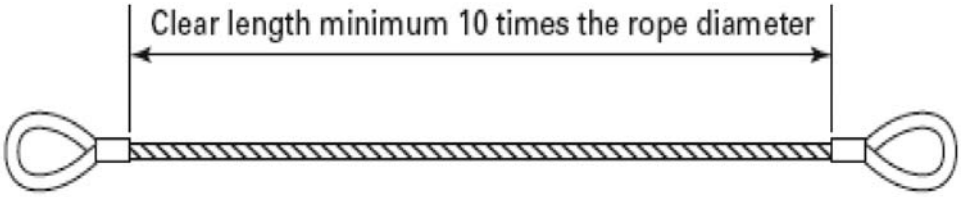

Figure 15
Minimum Sling Length
For rope with 6x19 and 6x36 classification or Cable Laid Slings

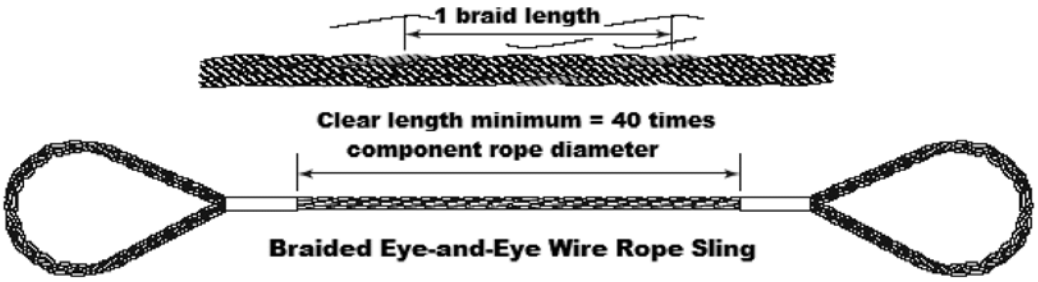

Figure 16 Minimum Braided Sling Length

(2) Wire rope sling fittings.

(a) Fittings must be used according to the fitting manufacturer's directions.

(b) Rate slings with the load capacity of the lowest rated component of the sling. For example, if you use fittings that are rated lower than the sling material itself, identify the sling with the lower rated capacity.

(c) Weld any end attachments, except covers to thimbles, before assembling the sling.

(3) Identification information. All wire rope slings must have legible identification information attached to the sling which includes the information below, see sample tag in Figure 17. For slings in use that are manufactured before the effective date of this rule, the information below must be added before use or at the time the periodic inspection is completed.

(a) Name or trademark of the manufacturer.

(b) Diameter or size.

(c) Rated loads for the types of hitches used and the angle that the load is based on.

(d) Number of legs, if more than one.

(e) Repairing agency, if the sling is ever repaired.

Vert.	Chock	Vert. Basket
2.2 Tons	1.6 Tons	4.4 Tons
Rated Capacity by Angle		
60°	45°	30°
3.8 Tons	3.1 Tons	2.2 Tons

Figure 17 Sample Wire Rope Sling ID Tag

Note: Sample tag for a 1/2" single-leg sling 6x19 or 6x36 classification, extra improved plow steel (EIPS) grade fiber core (FC) wire rope with a mechanical splice (ton = 2,000 lb).

(4) Inspection.

(a) A qualified person must inspect wire rope slings before their initial use, according to Table 17, both:

(i) When the sling is new; and

(ii) Whenever a repair, alteration, or modification has been done.

(b) A qualified person must perform a visual inspection for damage, each day or shift the wire rope sling is used:

(i) Include all fastenings and attachments;

(ii) Immediately remove any sling from service that is damaged beyond the criteria listed in Table 17; or

(iii) Remove fiber core wire rope slings that have been exposed to temperatures higher than one hundred eighty degrees Fahrenheit.

(c) A qualified person must perform periodic inspections on wire rope slings according to Table 17.

(5) Repair, alterations, or modifications.

(a) Repair wire rope slings as follows:

(i) Make sure slings are only repaired by the sling manufacturer or a qualified person;

(ii) Mark the sling to show the repairing agency;

(iii) Do not repair wire rope used in slings, wire rope must be replaced. Only end attachments and fittings can be repaired on a wire rope sling.

(b) Modification or alterations to end attachments or fittings must be considered as repairs and must conform to all other provisions of this part.

(c) Proof load test repaired slings according to the requirements in subsection (6) of this section.

(6) Proof load tests. Make sure the sling manufacturer or a qualified person proof load tests the following slings before initial use, according to Table 18:

(a) All repaired slings;

(b) All slings incorporating previously used or welded fittings;

(c) For single- or multiple-leg slings and endless slings, each leg must be proof loaded according to the requirements listed in Table 18 based on fabrication method. The proof load test must not exceed fifty percent of the component ropes' or structural strands' minimum breaking strength;

Table 17
Wire Rope Sling Inspection and Removal Criteria

Inspect wire rope slings for the following conditions:	Perform inspections:
• Missing or illegible sling identification. • Severe localized abrasion or scraping. • Kinking, crushing, birdcaging, or any other condition resulting in damage to the rope structure.	• At least once a year for slings in normal service.
• Evidence of heat damage.	• At least once a quarter for slings in severe service.
• Severe corrosion of the rope, end attachments, or fittings. • End attachments that are cracked, deformed, or worn to the extent that the strength of the sling is substantially affected.	• As recommended by a qualified person for slings in special service.
• Broken wires: – For strand-laid and single-part slings, ten randomly distributed broken wires in one rope lay, or five broken wires in one strand in one rope lay; – For cable-laid slings, twenty broken wires per lay; – For six-part braided slings, twenty broken wires per braid; – For eight-part braided slings, forty broken wires per braid. • Hooks that have any of the following conditions: – Any visibly apparent bend or twist from the plane of the unbent hook; – Any distortion causing an increase in throat opening five percent, not to exceed one-quarter inch, or as recommended by the manufacturer; – Wear exceeding ten percent, of the original section dimension of the hook or its load pin, or as recommended by the manufacturer; – Self-locking mechanism that does not lock. • Other visible damage that raises doubt about the safety of the sling.	

Table 18
Wire Rope Sling Proof Load Test Requirements

Type of equipment:	Proof load test:
• Mechanical splice slings.	Each leg to at least two times the single leg vertical hitch rated load.
• Swaged socket and poured socket slings.	Each leg to at least two times, but not more than two and one-half, times the single-leg vertical hitch rated load.
Note: For mechanical splice, swaged socket and poured socket slings follow the rope manufacturer's recommendations for proof load testing provided that it is within the above-specified proof load range, including (c) of this subsection.	
• Hand tucked slings, if proof load tested.	To at least one, but not more than one and one-quarter, times the single-leg vertical hitch rated load.

(d) The proof load test for components (fittings) attached to single legs must meet the requirements in (c) of this subsection;

(e) Proof load testing for master links must be in accordance with Table 19.

Table 19
Proof Load Test for Master Links on Wire Rope Slings

• Master links for two-leg bridle slings.	To at least four times the single-leg vertical hitch rated load.
• Master links for three-leg bridle slings.	To at least six times the single-leg vertical hitch rated load.
• Master links for four-leg bridle slings.	To at least eight times the single-leg vertical hitch rated load.

(7) Rated load. The term "rated capacity" is commonly used to describe rated load.

Note: Rated loads are based on the following factors:
- Strength of sling material;
- Design factor;
- Type of hitch;
- Angle of loading (see Figure 18, Angle of Loading);
- Diameter of curvature over which the sling is used (D/*d*) (see Figure 19, D/*d* ratio);
- Fabrication efficiency.

(a) Wire rope slings must be used within the rated loads shown in Tables 7 through 15 in ASME B30.9-2010. For angles that are not shown in these tables, either use the rated load for the next lower angle or have a qualified person calculate the rated load.

(b) Prohibit the use of horizontal sling angles less than thirty degrees unless recommended by the sling manufacturer or a qualified person. See Figure 18.

(c) Rated loads for slings used in a choker hitch must conform to the values shown in the above referenced tables, provided that the angle of choke is one hundred twenty degrees or greater. See Figure 20 and Table 20, Angle of Choke.

(d) Use either Figure 20 and Table 20, the manufacturer, or a qualified person to determine the rated load if the angle of choke in a choker hitch is less than one hundred twenty degrees.

(i) Inspect the entire length of the sling including splices, end attachments, and fittings.

(ii) Remove slings from use if any of the conditions in Table 17 are found.

(iii) Keep a record of the most recent periodic inspection available, including the condition of the sling.

Note: An external code mark on the sling is an acceptable means of recording the inspection as long as the code can be traced back to a record.

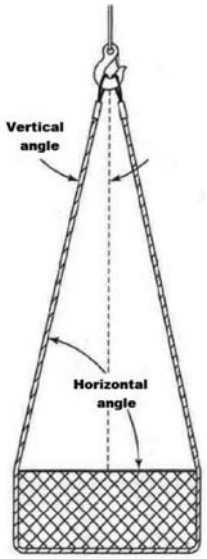

Figure 18
Angle of Loading

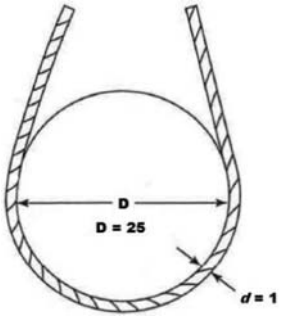

Figure 19
D/*d* Ratio

Note: When D is 25 times the component rope diameter (*d*) the D/*d* ratio is expressed as 25/1.

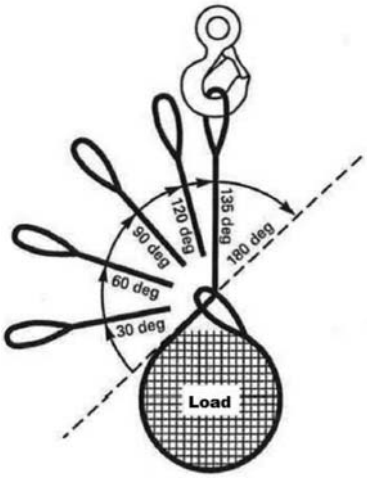

Figure 20
Angle of Choke

Table 20
Angle of Choke

Angle of Choke, deg.	Rated Capacity, %
Over 120	100
90 - 120	87
60 - 89	74
30 - 59	62
0 - 29	49

Note: Percent of sling rated capacity in a choker hitch.

(8) Use of wire rope slings.

(a) Hitch the slings in a way that provides control of the load.

(b) Shorten or adjust slings using only the methods approved by the manufacturer or qualified person.

• Do **not** shorten or lengthen by knotting, twisting, or by wire rope clips.

(c) Keep all parts of the human body from between the sling and the load, crane, or hoist hook.

(d) Protruding ends of strands in splices on slings and bridles must be covered or blunted.

(e) A sling must not be pulled from under a load when the load is resting on the sling.

(f) Prohibit all of the following:

(i) Intentional shock loading;

(ii) Avoid twisting and kinking.

(g) Decrease the rated load of the sling when D/*d* ratios (Figure 19) smaller than twenty-five to one. Consult the sling manufacturer for specific data or refer to the *Wire Rope Sling User's Manual* (wire rope technical board).

(h) Follow Table 21, Use of Wire Rope Slings or Clips, when using any of the identified wire rope slings or clips.

(i) Slings in contact with edges, corners, or protrusions must be protected with a material of sufficient strength, thickness, and construction to prevent damage to the sling. See Figure 14.

Table 21
Use of Wire Rope Slings or Clips

If you are using:	Then:
Single leg slings used with multiple-leg slings.	Make sure the rating shown is not exceeded in any leg of the multiple-leg sling.
Hand tucked slings are used in a single leg vertical lift.	Do not allow the sling or load to rotate.
Slings made with wire rope clips.	Must not be used as a choker hitch.
U-bolt wire rope clips.	Use only U-bolt wire rope clips that are made of drop-forged steel.
	Follow Table 15 for the number and spacing of the clips.
	Apply the U-bolt so the "U" section is in contact with the dead end of the rope (see Figure 21, Installation and Loading).

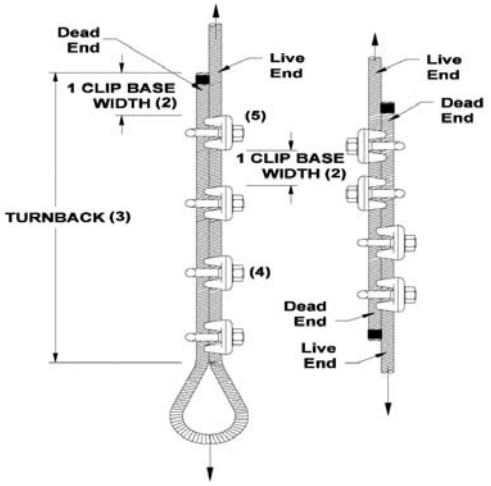

Figure 21
Installation and Loading

Proper Installation Requires
• Correct number of clips for wire rope size
• Correct spacing of clips
• Correct turnback length
• Correct torque on nuts
• Correct orientation of saddle on live end

[Statutory Authority: RCW 49.17.010, 49.17.040, 49.17.050, 49.17.060 and chapter 49.17 RCW, and 29 C.F.R. 1926, Subpart CC. WSR 13-02-068, § 296-155-55805, filed 12/31/12, effective 2/1/13. Statutory Authority: RCW 49.17.010, 49.17.040, 49.17.050, 49.17.440, 49.17.060, and 29 C.F.R. 1926, Subpart CC. WSR 12-01-086, § 296-155-55805, filed 12/20/11, effective 2/1/12.]

WAC 296-155-55810 Metal mesh slings. (1) Identification information on metal mesh slings. Make sure all slings have legible identification information permanently attached to the sling which includes all of the following information:

(a) Name or trademark of the manufacturer;

(b) Rated loads for the types of hitches used, and the angle they're based on;

(c) Width and gauge;

(d) Number of legs, if more than one;

(e) Individual sling identification (e.g., serial numbers);

(f) Repairing agency, if the sling has ever been repaired.

(2) Inspection.

(a) A qualified person must inspect metal mesh slings before their initial use, according to Table 22, both:

(i) When the sling is new; and

(ii) Whenever a repair, alteration, or modification has been done.

(b) A qualified person must perform a visual inspection for damage, each day or shift the metal mesh sling is used. Immediately remove from service any sling damaged beyond the criteria in Table 22.

(c) A qualified person must perform periodic inspections on metal mesh slings according to Table 22.

(i) Inspect the entire length, including splices, end attachments, and fittings.

(ii) Remove slings from use if any of the conditions in Table 22 are found.

(iii) Keep a record of the most recent periodic inspection available, including the condition of the sling.

Note: An external code mark on the sling is an acceptable means of recording the inspection as long as the code can be traced back to a record.

Table 22
Metal Mesh Sling Inspection Table

Inspect metal mesh slings for conditions such as the following:	Perform inspections:
• Missing or illegible sling identification; • Broken welds along the sling edge; • Broken brazed joints along the sling edge; • Broken wire in any part of the mesh; • Reduction in wire diameter of: – Twenty-five percent due to abrasion; – Fifteen percent due to corrosion; • Lack of flexibility due to the distortion of the mesh; • Distortion of the choker fitting so the depth of the slot is increased by more than ten percent; • Distortion of either end fitting so the width of the eye opening is decreased by more than ten percent; • A fifteen percent reduction of the original cross-sectional area of any point around the hook opening of the end fitting; • Visible distortion of either end fitting out of its plane; • Cracked end fitting; • Slings in which the spirals are locked or without free articulation; • Fittings that are pitted, corroded, cracked, bent, twisted, gouged, or broken; • Other visible damage that raises doubt about the safety of the sling.	• At least once a year for slings in normal service; • At least once a quarter for slings in severe service; • As recommended by a qualified person for slings in special service.

(3) Repair, alteration, or modifications. Repair metal mesh slings as follows:

(a) Make sure slings are only repaired by the manufacturer or a qualified person;

(b) Straightening of spiral or cross rods, or forcing a spiral into position is prohibited (see Figure 22);

(c) Mark the sling to show the repairing agency;

(d) Replace cracked, broken, bent or damaged metal mesh or components instead of repairing them;

(e) Proof load test repaired slings according to subsection (4) of this section.

(4) Proof load testing.

(a) Make sure the sling manufacturer or a qualified person proof load tests all new and repaired metal mesh slings before initial use;

(b) Use a proof load test that is a minimum of two times the vertical hitch rated load.

(5) Rated load.

Note: Rated loads are based on the following factors:
• Strength of sling material;
• Design factor;
• Type of hitch;
• Angle of loading.

(a) Metal mesh slings must be used within the rated loads shown in Table 17 in ASME B30.9-2010. For angles that are not shown in these tables, use either the rated load for the next lower angle or one calculated by a qualified person.

(b) Rate slings with the load capacity of the lowest rated component of the sling. For example, if fittings are rated lower than the sling material itself, identify the sling with the lower rated capacity.

(c) The use of horizontal sling angles less than thirty degrees is prohibited, unless recommended by the sling manufacturer or a qualified person.

(d) Rated loads for slings used in a choker hitch must conform to the values shown in the above referenced table, provided that the angle of choke is one hundred twenty degrees or greater.

(e) Have the manufacturer or a qualified person determine the rated load if the angle of choke in a choker hitch is less than one hundred twenty degrees.

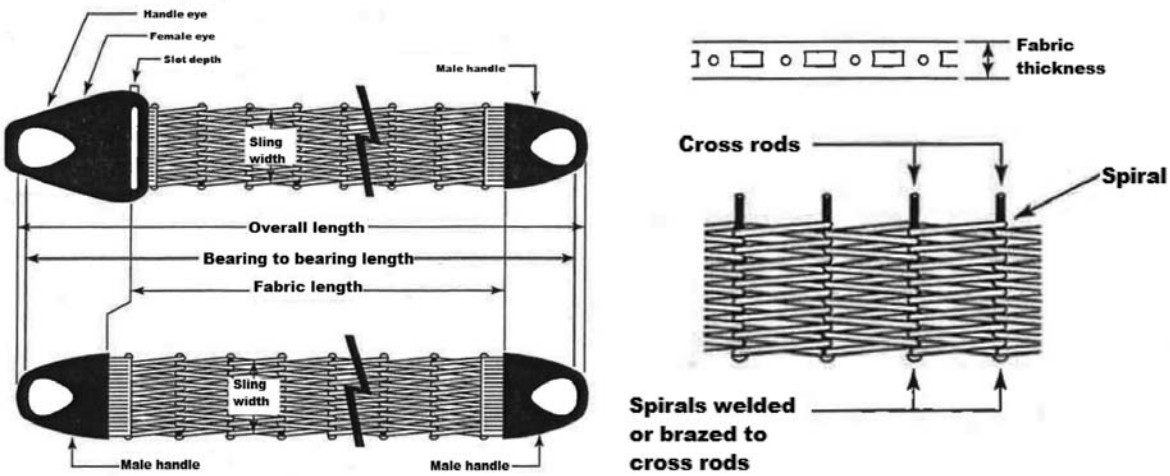

Figure 22
Metal Mesh Sling

(6) Use of metal mesh slings.

(a) Use metal mesh slings safely by doing all of the following:

(i) Shorten or adjust slings using only the methods approved by the manufacturer or a qualified person;

(ii) Sling legs must not be kinked;

(iii) Hitch slings in a way that provides control of the load.

(b) Keep all parts of the human body from between the sling and the load, crane, or hoist hook.

(c) Prohibit the following:

(i) The use of metal mesh slings as bridles on suspended personnel platforms;

(ii) Intentional shock loading;

(iii) Straightening a spiral or cross rod or forcing a spiral into position;

(iv) Avoid twisting and kinking.

Note: Slings in contact with edges, corners, or protrusions should be protected with a material of sufficient strength, thickness, and construction to prevent damage. See Figure 14.

[Statutory Authority: RCW 49.17.010, 49.17.040, 49.17.050, 49.17.440, 49.17.060, and 29 C.F.R. 1926, Subpart CC. WSR 12-01-086, § 296-155-55810, filed 12/20/11, effective 2/1/12.]

WAC 296-155-55815 Synthetic rope slings. (1) Identification. Verify all slings have legible identification information attached to the sling which includes the following information:

(a) Name or trademark of the manufacturer;

(b) Manufacturer's code or stock number;

(c) Type of fiber material;

(d) Rated loads for the types of hitches used, and the angle that the load is based on;

(e) Number of legs, if more than one;

(f) Repairing agency, if the sling has ever been repaired.

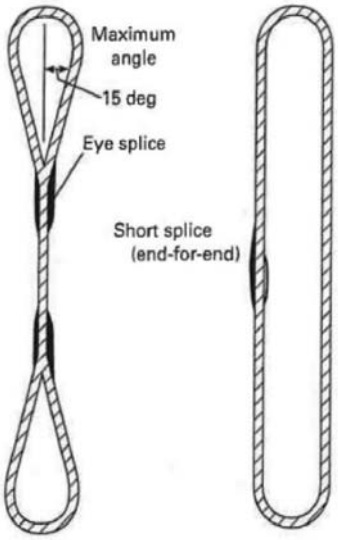

Figure 23
Synthetic Fiber Rope Slings

(2) Inspection.

(a) A qualified person must inspect synthetic fiber rope slings before their initial use, according to Table 23, both:

(i) When the sling is new; and

(ii) Whenever a repair, alteration, or modification has been done.

(b) A qualified person must perform a visual inspection for damage, each day or shift the synthetic fiber rope sling is used. Immediately remove any sling from service that is damaged beyond the criteria listed in Table 23.

(c) A qualified person must perform periodic inspections on synthetic fiber rope slings, according to Table 23.

(i) Examine each sling and component individually, taking care to expose and examine all surfaces.

(ii) Inspect the entire length including splices, end attachments, and fittings.

(iii) Remove slings from use if any of the conditions in Table 23 are found.

(iv) Keep a record of the most recent periodic inspection available, including the condition of the sling.

Note: An external code mark on the sling is an acceptable means of recording the inspection as long as the code can be traced back to a record.

Table 23
Synthetic Rope Sling Inspection and Removal Criteria

Inspect synthetic rope slings for the following conditions:	Perform inspections:
• Missing or illegible sling identification; • Cuts, gouges, or areas of extensive fiber breakage along the length; • Abraded areas on the rope; • Damage that is estimated to have reduced the effective diameter of the rope by more than ten percent; • Uniform fiber breakage along the major part of the length of the rope in the sling such that the entire rope appears covered with fuzz or whiskers; • Inside the rope, fiber breakage, fused or melted fiber (observed by prying or twisting to open the strands) involving damage estimated at ten percent of the fiber in any strand or the rope as a whole; • Discoloration, brittle fibers, and hard or stiff areas that may indicate chemical, ultraviolet or heat damage; • Dirt and grit in the interior of the rope structure that is deemed excessive; • Foreign matter that has permeated the rope, making it difficult to handle and attracting and holding grit;	• At least once a year for slings in normal service; • At least once a quarter for slings in severe service; • As recommended by a qualified person for slings in special service.
• Kinks or distortion in the rope structure, particularly if caused by forcibly pulling on loops (known as hockles); • Melted, hard, or charred areas that affect more than ten percent of the diameter of the rope or affect several adjacent strands along the length that affect more than ten percent of strand diameters; • Poor condition of thimbles or other components manifested by corrosion, cracks, distortion, sharp edges, or localized wear; • Hooks that have any of the following conditions: – Any visibly apparent bend or twist from the plane of the unbent hook; – Any distortion causing an increase in throat opening five percent, not to exceed one-quarter inch, or as recommended by the manufacturer; – Wear exceeding ten percent, of the original section dimension of the hook or its load pin, or as recommended by the manufacturer; – Self-locking mechanism that does not lock. • Other visible damage that raises doubt about the safety of the sling.	

(3) Repair, alteration, or modifications. Meet the following requirements when repairing synthetic rope slings:

(a) Synthetic rope slings must only be repaired by the manufacturer or a qualified person;

(b) Mark the sling to show the repairing agency;

(c) Use components that meet the requirements of this part for sling repair;

(d) Do not repair slings by knotting or resplicing existing sling ropes;

(e) Proof load test repaired slings according to the requirements in subsection (4) of this section.

(4) Proof load test. The sling manufacturer or a qualified person must proof load test repaired slings and slings incorporating previously used or welded fittings before initial use, according to Table 24:

Table 24
Synthetic Rope Sling Proof Load Requirements

Type of equipment:	Proof load test:
• Single leg slings; • Multiple leg slings; • Endless slings; • Fittings attached to single legs.	To a minimum of two times the single leg vertical hitch rated load.
Master links for two-leg bridle slings.	To a minimum of four times the single leg vertical hitch rated load.
Master links for three-leg bridle slings.	To a minimum of six times the single leg vertical hitch rated load.
Master links for four-leg bridle slings.	To a minimum of eight times the single leg vertical hitch rated load.

(5) Rated load.

Note: Rated loads are based on the following factors:
- Strength of the sling material;
- Design factor;
- Type of hitch (see Figure 24, Hitch Types for Synthetic Rope Slings);
- Angle of loading (see Figure 18, Angle of Loading);
- Diameter of curvature over which the sling is used (see Figure 19, D/*d* Ratio).

(a) Synthetic rope slings must be used within the rated loads shown in Tables 18 and 19 in ASME B30.9-2010. For angles that are not shown in these tables, either use the rated load for the next lower angle or one calculated by a qualified person.

(b) Rate slings with the load capacity of the lowest rated component of the sling. For example, if you use fittings that are rated lower than the sling material itself, identify the sling with the lower-rated capacity.

(c) The use of horizontal sling angles less than thirty degrees is prohibited, unless recommended by the sling manufacturer or a qualified person. (See Figure 18.)

(d) Rated loads for slings used in a choker hitch must conform to the values shown in the above referenced tables, provided that the angle of choke is one hundred twenty degrees or greater.

(e) Use Figure 20, the manufacturer, or a qualified person to determine the rated load if the angle of choke in a choker hitch is less than one hundred twenty degrees.

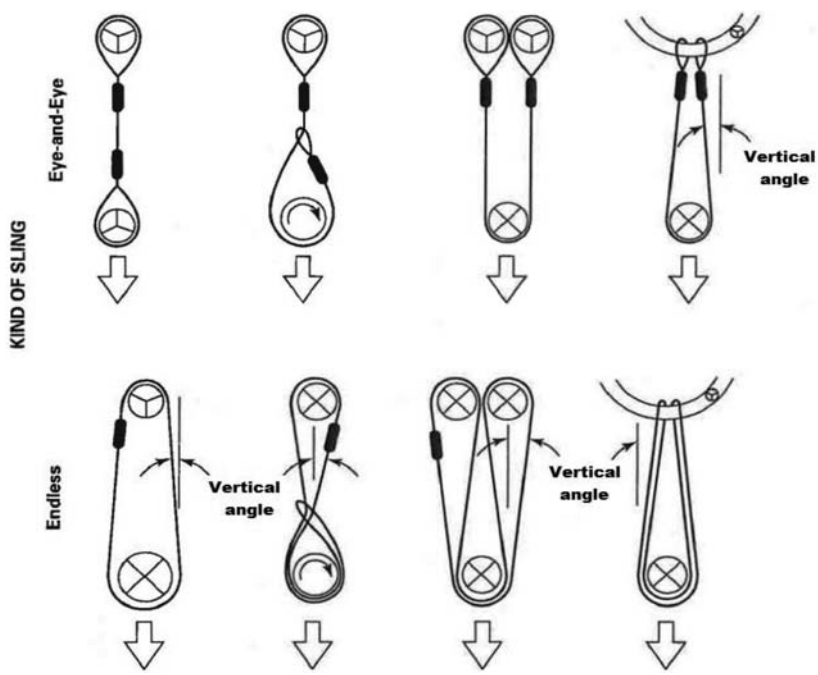

Figure 24
Hitch Types for Synthetic Rope Slings

The symbols below represent load or support in contact with the rope sling. The contact surface diameter divided by the rope diameter is designated D/*d* ratio as described in Figure 19.

Represents a contact surface which must have a diameter of curvature at least double the diameter of the rope from which the sling is made.

Represents a contact surface which must have a diameter of curvature at least eight times the diameter of the rope.

Represents a load in choker hitch and illustrates the rotary force on the load and/or the slippage of the rope in contact with the load. Diameter of curvature of load surface must be at least double the diameter of the rope.

Note: Legs five degrees or less from vertical may be considered vertical. For slings more than five degrees vertical, the actual angle must be used.

(6) Use of synthetic ropes.

(a) Use synthetic rope slings safely by doing all of the following:

(i) Shorten or adjust slings only with methods approved by the manufacturer or qualified person;

(ii) Slings must not be shortened or lengthened by knotting or twisting;

(iii) Hitch slings in a way that provides control of the load;

(iv) Slings in contact with edges, corners, protrusions, or abrasive surfaces must be protected with a material of sufficient strength, thickness, and construction to prevent damage, see Figure 14;

(v) Do not allow the sling or load to rotate when hand-tucked slings are used in a single-leg vertical lift application; and

(vi) Keep all parts of the human body from between the sling and the load, crane, or hoist hook.

(b) All of the following is prohibited:

(i) Intentional shock loading; and

(ii) Twisting or kinking.

[Statutory Authority: RCW 49.17.010, 49.17.040, 49.17.050, 49.17.440, 49.17.060, and 29 C.F.R. 1926, Subpart CC. WSR 12-01-086, § 296-155-55815, filed 12/20/11, effective 2/1/12.]

WAC 296-155-55820 Synthetic webbing slings. (1) Identification. Make sure all slings have legible identification information permanently attached to the sling which includes the following information:

(a) Name or trademark of the manufacturer;

(b) Manufacturer's code or stock number;

(c) Rated loads for the types of hitches used, and the angle that the load is based on;

(d) Type of synthetic web material;

(e) Number of legs, if more than one;

(f) Repairing agency, if the sling is ever repaired.

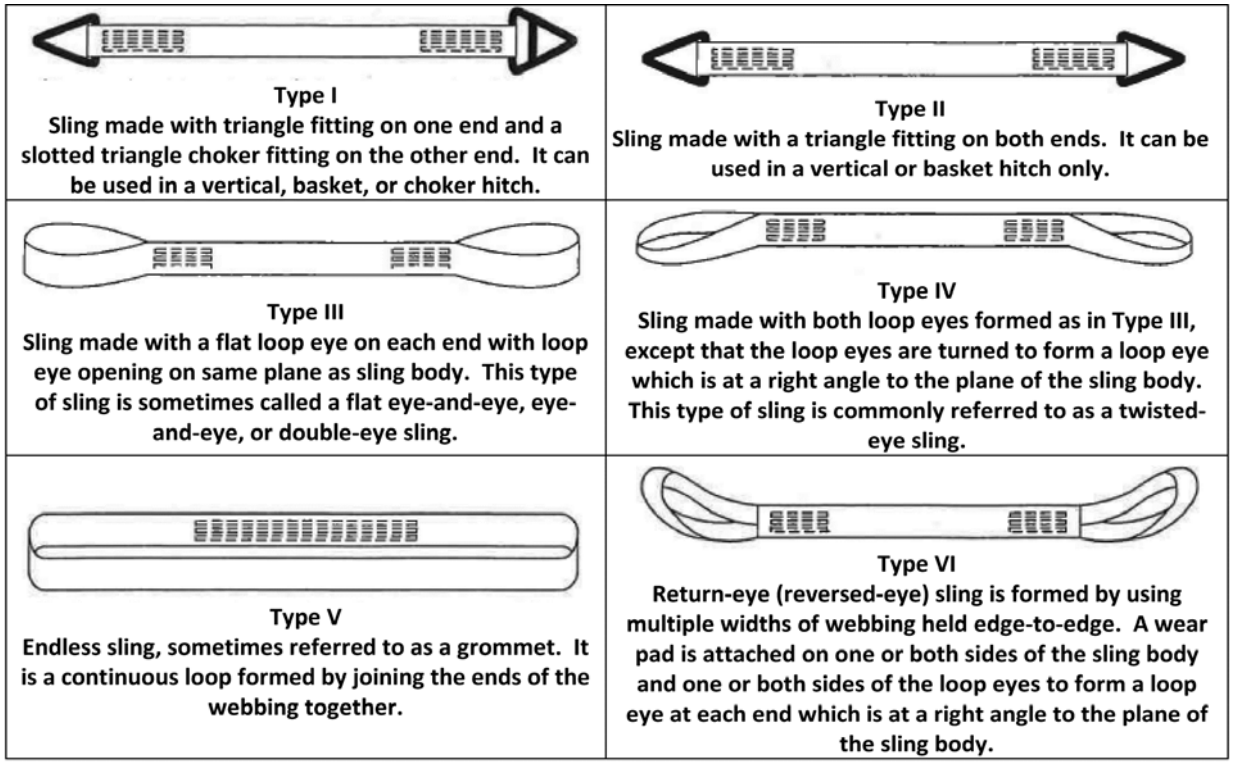

Figure 25
Synthetic Webbing Slings

(2) Inspection.

(a) A qualified person must inspect synthetic webbing slings before their initial use, according to Table 25:

(i) When the sling is new; and

(ii) Whenever a repair, alteration, or modification has been done.

(b) A qualified person must perform a visual inspection for damage, each day or shift the synthetic webbing sling is used. Immediately remove from service any sling that is damaged beyond the criteria listed in Table 25.

(c) A qualified person must perform periodic inspections on synthetic webbing slings, according to Table 25.

(i) Examine each sling and component individually, taking care to expose and examine all surfaces.

(ii) Remove slings from use if any of the conditions in Table 25 are found.

(iii) Keep a written record of the most recent periodic inspection available, including the condition of the sling.

Note: An external code mark on the sling is an acceptable means of recording the inspection as long as the code can be traced back to a record.

Table 25
Synthetic Webbing Sling Inspection

Inspect synthetic webbing slings for the following conditions:	Perform inspections:
• Missing or illegible sling identification; • Acid or caustic burns; • Melting or charring on any part of the sling; • Holes, tears, cuts or snags; • Broken or worn stitching in load bearing splices; • Excessive abrasive wear; • Knots in any part of the sling; • Discoloration, brittle fibers, and hard or stiff areas that may indicate chemical or ultraviolet/sunlight damage; • Fittings that are pitted, corroded, cracked, bent, twisted, gouged or broken; • Hooks that have any of the following conditions: – Any visibly apparent bend or twist from the plane of the unbent hook; – Any distortion causing an increase in throat opening five percent, not to exceed one-quarter inch, or as recommended by the manufacturer; – Wear exceeding ten percent, of the original section dimension of the hook or its load pin, or as recommended by the manufacturer; – Self-locking mechanism that does not lock. • Other visible damage that causes doubt about the safety of continued use of the sling.	• At least once a year for slings in normal service; • At least once a quarter for slings in severe service; • As recommended by a qualified person for slings in special service.

(3) Repair, alterations, or modifications.

(a) Meet the following requirements when repairing synthetic webbing slings:

(i) Slings are only to be repaired by the manufacturer or a qualified person;

(ii) Temporary repairs are prohibited;

(iii) Mark the sling to show the repairing agency;

(iv) Components used for sling repair must meet the requirements of this part;

(v) Cracked, broken, melted, or otherwise damaged webbing material or fittings other than hooks must not be repaired;

(vi) Load bearing splices must not be repaired;

(b) Proof load test repaired slings according to the requirements in subsection (4) of this section.

(4) Proof load test. The sling manufacturer or a qualified person must proof load test repaired slings and slings that have been altered or modified before initial use according to Table 26:

Table 26
Synthetic Webbing Sling Proof Test Requirements

Type of equipment:	Proof load test:
• Single leg slings; • Multiple leg slings; • Endless slings; • Fittings attached to single legs.	To a minimum of two times the single leg vertical hitch rated load.

Type of equipment:	Proof load test:
Master links for two-leg bridle slings.	To a minimum of four times the single leg vertical hitch rated load.
Master links for three-leg bridle slings.	To a minimum of six times the single leg vertical hitch rated load.
Master links for four-leg bridle slings.	To a minimum of eight times the single leg vertical hitch rated load.

(5) Rated loads.

Note: Rated loads are based on the following factors:
- Strength of the material;
- Design factor;
- Type of hitch;
- Angle of loading (see Figure 18, Angle of Loading);
- Fabrication efficiency;
- Diameter of curvature over which the sling is used.

(a) Synthetic web slings must be used within the rated loads shown in Tables 20 through 24 in ASME B30.9-2010. For angles that are not shown in these tables, use either the rated load for the next lower angle or one calculated by a qualified person.

(b) Rate slings with the load capacity of the lowest rated component of the sling. For example, if you use fittings that are rated lower than the sling material itself, identify the sling with the lower-rated capacity.

(c) The use of horizontal sling angles less than thirty degrees is prohibited, unless recommended by the sling manufacturer or a qualified person. (See Figure 18.)

(d) Use Figure 20, Angle of Choke, the manufacturer, or a qualified person to determine the rated load if the angle of choke in a choker hitch is less than one hundred twenty degrees.

(e) Rated loads for slings used in a choker hitch must conform to the values shown in the above referenced tables, provided that the angle of choke is one hundred twenty degrees or greater. (See Figure 20.)

(6) Use of synthetic webbing slings.

(a) Use synthetic webbing slings safely by meeting all of the following requirements:

(i) Shorten or adjust slings only with methods approved by the manufacturer or qualified person;

(ii) Slings must not be shortened or lengthened by knotting or twisting;

(iii) Hitch slings in a way that provides control of the load;

(iv) Protect slings with material of sufficient strength, thickness, and construction to prevent damage from sharp edges, corners, protrusions, or abrasive surfaces. See Figure 14;

(v) Keep all parts of the human body from between the sling and the load, crane, or hoist hook;

(vi) Fittings must be of a minimum breaking strength equal to that of the sling.

(b) Webbing. Synthetic webbing must be of uniform thickness and width and selvage edges must not be split from the webbing's width.

(c) Intentional shock loading is prohibited.

[Statutory Authority: RCW 49.17.010, 49.17.040, 49.17.050, 49.17.060 and chapter 49.17 RCW, and 29 C.F.R. 1926, Subpart CC. WSR 13-02-068, § 296-155-55820, filed 12/31/12, effective 2/1/13. Statutory Authority: RCW 49.17.010, 49.17.040, 49.17.050, 49.17.440, 49.17.060, and 29 C.F.R. 1926, Subpart CC. WSR 12-01-086, § 296-155-55820, filed 12/20/11, effective 2/1/12.]

WAC 296-155-55825 Synthetic roundslings. (1) Identification. All synthetic roundslings must be marked with the following information:

(a) Name or trademark of the manufacturer;

(b) Manufacturer's code or stock number;

(c) Core material;

(d) Cover material if different from core material;

(e) Rated loads for the types of hitches used, and the angle that the load is based on;

(f) Number of legs, if more than one;

(g) Repairing agency, if the sling is ever repaired.

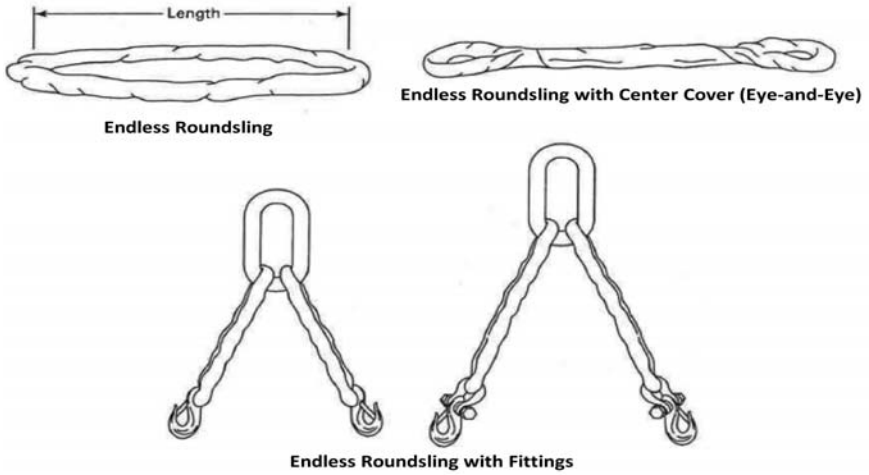

Figure 26
Synthetic Roundslings

(2) Inspection.

(a) A qualified person must inspect synthetic roundslings before their initial use, according to Table 27, both:

(i) When the sling is new; and

(ii) Whenever a repair, alteration, or modification has been done.

(b) A qualified person must perform a visual inspection for damage, each day or shift the synthetic roundsling is used. Immediately remove from service any sling that is damaged beyond the criteria listed in Table 27.

(c) A qualified person must perform periodic inspections on synthetic roundslings, according to Table 27.

(i) Examine each sling and component individually, taking care to expose and examine all surfaces.

(ii) Remove slings from use if any of the conditions in Table 27 are found.

(iii) Keep a written record of the most recent periodic inspection available, including the condition of the sling.

Note: An external code mark on the sling is an acceptable means of recording the inspection as long as the code can be traced back to a record.

Table 27
Synthetic Roundsling Inspection and Removal Criteria

Inspect synthetic roundslings for conditions such as the following:	Perform inspections:
• Missing or illegible sling identification. • Acid or caustic burns. • Evidence of heat damage. • Holes, tears, cuts, abrasive wear or snags that expose the core yarns. • Broken or damaged core yarns. • Weld spatter that exposes core yarns. • Roundslings that are knotted.	• At least once a year for slings in normal service.
• Fittings that are pitted, corroded, cracked, bent, twisted, gouged or broken.	• At least once a quarter for slings in severe service.
• Hooks that have any of the following conditions: – Any visibly apparent bend or twist from the plane of the unbent hook. – Any distortion causing an increase in throat opening five percent, not to exceed one-quarter inch, or as recommended by the manufacturer. – Wear exceeding ten percent, of the original section dimension of the hook or its load pin, or as recommended by the manufacturer. – Self-locking mechanism that does not lock. • Other visible damage that causes doubt about the safety of continued use of the sling.	• As recommended by a qualified person for slings in special service.

(3) Repair, alterations, or modifications.

(a) Meet the following requirements when repairing synthetic roundslings:

(i) Only the manufacturer or a qualified person can repair slings;

(ii) Mark the sling to show the repairing agency;

(iii) Only use components that meet the requirements of this rule to repair slings;

(iv) Replace cracked, broken, or bent fittings other than hooks; do not repair them.

(b) Both of the following are prohibited:

(i) Temporary repairs of roundslings or fittings; and

(ii) The repair of load bearing yarns.

Proof load test repaired slings according to the requirements in subsection (4) of this section.

(4) Proof load tests. The sling manufacturer or a qualified person must proof load test repaired slings and slings that have been altered or modified before initial use, according to Table 28:

Table 28
Synthetic Roundslings Proof Test Requirements

Type of equipment:	Proof load test:
• Single leg slings. • Multiple leg slings. • Endless slings. • Fittings attached to single legs.	To a minimum of two times the single leg vertical hitch rated load.
Master links for two-leg bridle slings.	To a minimum of four times the single leg vertical hitch rated load.

Type of equipment:	Proof load test:
Master links for three-leg bridle slings.	To a minimum of six times the single leg vertical hitch rated load.
Master links for four-leg bridle slings.	To a minimum of eight times the single leg vertical hitch rated load.

(5) Rated loads.

Note: Rated loads are based on the following factors:
- Strength of the material.
- Design factor.
- Type of hitch.
- Angle of loading. (See Figure 18, Angle of Loading.)
- Diameter of curvature over which the sling is used.

(a) Synthetic roundslings must be used within the rated loads shown in Table 25 in ASME B30.9-2010. For angles that are not shown in these tables, either use the rated load for the next lower angle or one calculated by a qualified person

(b) Rate slings with the load capacity of the lowest rated component of the sling. For example, if you use fittings that are rated lower than the sling material itself, identify the sling with the lower rated capacity.

(c) Prohibit the use of horizontal sling angles less than thirty degrees unless recommended by the sling manufacturer or a qualified person.

(d) Use Figure 18, Angle of Choke, the manufacturer, or a qualified person to determine the rated load if the angle of choke in a choker hitch is less than one hundred twenty degrees.

(e) Rated loads for slings used in a choker hitch must conform to the values shown in the above referenced Table 20 provided that the angle of choke is one hundred twenty degrees or greater. (See Figure 18.)

(6) Use of synthetic roundslings.

(a) Use methods approved by the manufacturer or qualified person to shorten or adjust slings. Slings must not be shortened or lengthened by knotting or twisting.

(b) Hitch slings in a way that provides control of the load.

(c) Protect slings with material of sufficient strength, thickness, and construction to prevent damage from sharp edges, corners, protrusions, or abrasive surfaces. (See Figure 14.)

(d) Keep all parts of the human body from between the sling and the load, crane, or hoist hook.

(e) Intentional shock loading is prohibited.

[Statutory Authority: RCW 49.17.010, 49.17.040, 49.17.050, 49.17.440, 49.17.060, and 29 C.F.R. 1926, Subpart CC. WSR 12-01-086, § 296-155-55825, filed 12/20/11, effective 2/1/12.]

WAC 296-155-561 Rigging hardware.

[Statutory Authority: RCW 49.17.010, 49.17.040, 49.17.050, 49.17.440, 49.17.060, and 29 C.F.R. 1926, Subpart CC. WSR 12-01-086, § 296-155-561, filed 12/20/11, effective 2/1/12.]

WAC 296-155-56100 General requirements. (1) Inspections.

(a) A qualified person must perform an inspection on all hardware according to Table 29, each day before using. If a daily inspection is not feasible because the hardware is in a semipermanent or inaccessible location, a periodic inspection is allowed instead of daily.

(b) Hardware must be removed from service when it shows any conditions listed in Table 29, or any other hazardous condition.

Table 29
Hardware Inspection

For all hardware, inspect for the following:
• Missing or illegible identification. • For shackles, missing or illegible manufacturer's name or trademark and/or rated load identification.
• Indications of heat damage, including weld spatter or arc strikes.
• Excessive pitting or corrosion.
• Load bearing components that are: – Bent. – Twisted. – Distorted. – Stretched. – Elongated. – Cracked. – Broken.
• Excessive nicks or gouges. For riggings blocks, excessive nicks, gouges and wear.
• Ten percent reduction of the original or catalog dimension at any point. For shackles, this includes at any point around the body or pin.
• Excessive thread damage or wear, where applicable.
• Evidence of unauthorized welding or modification.
• Any other conditions that cause doubt as to the safety of continued use.
• On **shackles,** also inspect for incomplete pin engagement.
• On **swivels and swivel hoist rings,** check for lack of ability to freely rotate or pivot.
• On **compression hardware,** also check for: – Unauthorized replacement components. – Insufficient number of wire rope clips. – Improperly tightened wire rope clips. – Damaged wire rope. – Indications of wire rope slippage. – Improper assembly.
• On **swivels,** check for loose or missing nuts, bolts, cotter pins, snap rings, or other fasteners and retaining devices.
• On **blocks** check for: – Loose or missing nuts, bolts, cotter pins, snap rings, or other fasteners and retaining devices.

For all hardware, inspect for the following:
– Misalignment or wobble in sheaves.
– Excessive sheave groove corrugation or wear.

(2) Repairs, alterations, or modifications.

(a) Rigging hardware must be repaired, altered or modified according to the hardware manufacturer or a qualified person.

(b) Welding of hardware is prohibited unless authorized by the manufacturer.

(c) Replacement parts must meet or exceed the original rigging hardware manufacturer's specifications.

(3) Hardware use.

(a) Hardware must be selected with the characteristics suitable for the application and environment where it will be used.

(b) The rated load of the hardware must not be exceeded.

(c) At least one of the workers using rigging hardware must meet the requirements of WAC 296-155-53306.

[Statutory Authority: RCW 49.17.010, 49.17.040, 49.17.050, 49.17.060 and chapter 49.17 RCW, and 29 C.F.R. 1926, Subpart CC. WSR 13-02-068, § 296-155-56100, filed 12/31/12, effective 2/1/13. Statutory Authority: RCW 49.17.010, 49.17.040, 49.17.050, 49.17.440, 49.17.060, and 29 C.F.R. 1926, Subpart CC. WSR 12-01-086, § 296-155-56100, filed 12/20/11, effective 2/1/12.]

WAC 296-155-56105 Shackles. (1) Pins must be connected to the choking eye of the sling when a shackle is used in a choker hitch.

(2) Screw pins must be:

(a) Fully engaged, with the shoulder in contact with the shackle body (see Figure 27, Typical Shackle Components).

(b) Rigged in a way that keeps the pin from unscrewing while in use.

(c) Secured from rotation or loosening if used for long-term installations.

(3) Cotter pins must be kept in good working condition.

(4) If the shackle is side loaded, reduce the rated load, according to the recommendations of the manufacturer or a qualified person (see Figure 28, Side Loading).

Note: See Figure 29, Shackle Types, for examples of types of shackles covered by this rule.

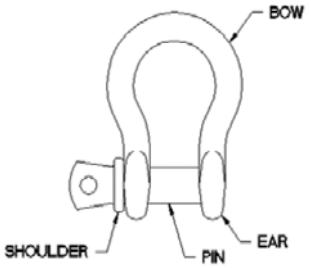

Figure 27
Typical Shackle Components

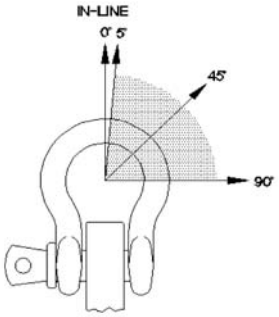

Figure 28
Side Loading

Side Loading Angle, deg.	% Rated Load Reduction
In-line (0) to 5	None
6 to 45	30%
46 to 90	50%
Over 90	Not permitted unless authorized by manufacturer or qualified person

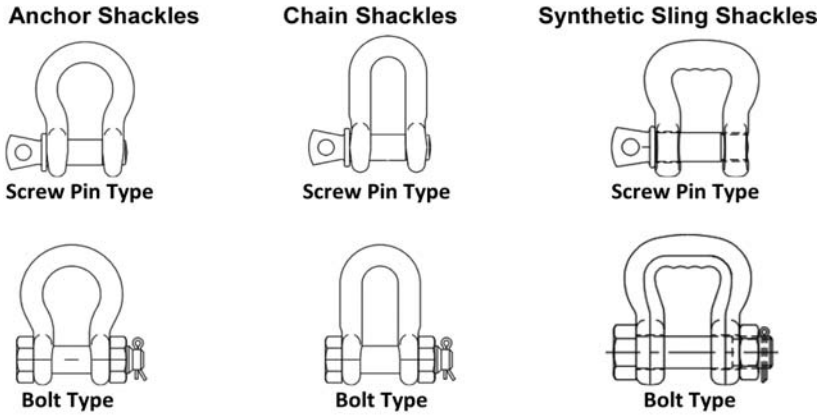

Figure 29
Shackle Types

[Statutory Authority: RCW 49.17.010, 49.17.040, 49.17.050, 49.17.440, 49.17.060, and 29 C.F.R. 1926, Subpart CC. WSR 12-01-086, § 296-155-56105, filed 12/20/11, effective 2/1/12.]

WAC 296-155-56110 Adjustable hardware. (1) Turnbuckles. Follow these rigging practices for turnbuckles:

(a) Locking nuts, if used, must be compatible with the threads of the turnbuckle end. (See Figure 30, Turnbuckle Types.)

(b) For long-term installations, secure turnbuckles in a way that prevents unscrewing.

(c) Turnbuckle end fitting threads must be fully engaged in the body threads.

(d) Components, including pins, bolts, nuts, or cotter pins used with jaw ends, must be in good working condition prior to use.

Notes:
- See Figure 30 for types of turnbuckles covered by this rule.
- Pipe bodies conceal the length of thread engagement. Verify full engagement before loading. (See Figure 30.)

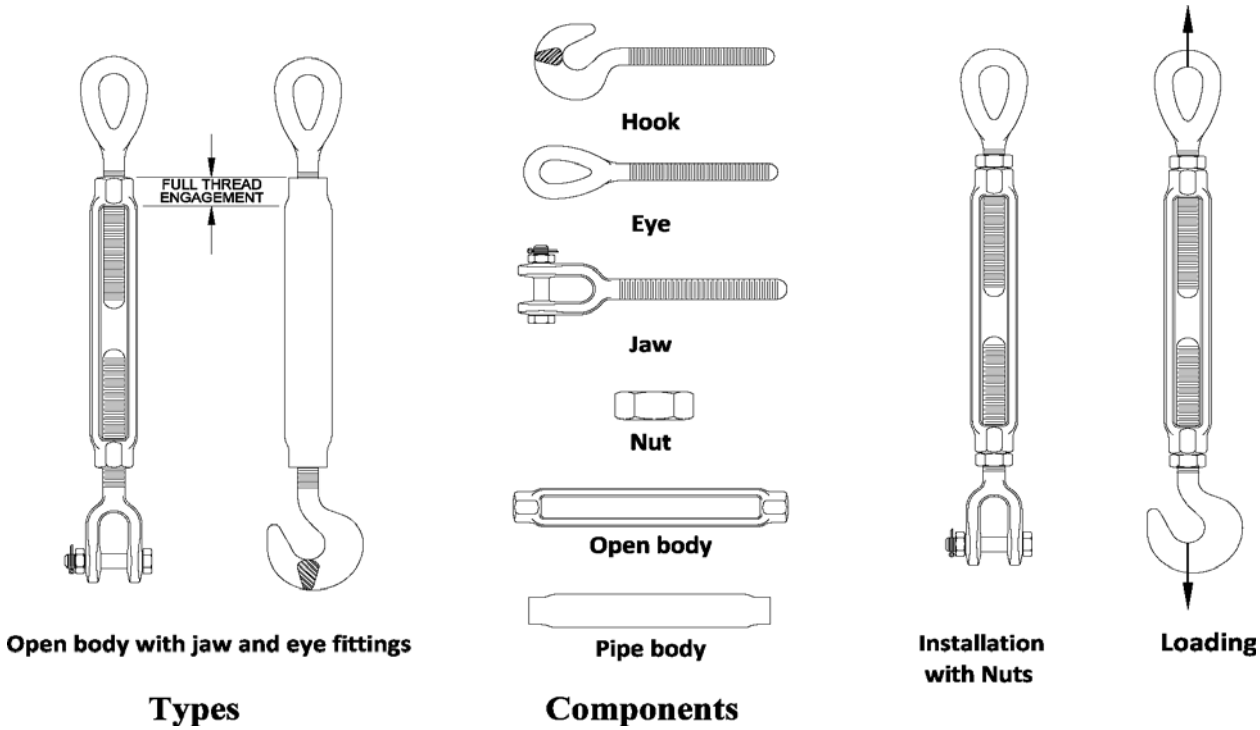

Figure 30
Turnbuckle Types

(2) Eyebolts. Follow these rigging practices for eyebolts:

(a) Eyebolts not shouldered to the load must only be used for in-line loads. (See Figure 31, Eyebolts.)

(b) Only shoulder eyebolts must be used for angular lifting.

(i) The shoulder must be flush and securely tightened against the load.

(ii) The working load limit (WLL) must be reduced as shown in Figure 31.

(iii) For angular lifts, the plane of the eye must be aligned with the direction of loading. If needed, flat washers can be used under the shoulder to position the plane of the eye. (See Figure 31.)

(c) When using eyebolts in a tapped blind hole, the effective thread length must be at least one and one-half times the diameter of the bolt for engagement in steel. (See Figure 31.) For other engagements, or engagements in other materials, contact the eyebolt manufacturer or a qualified person.

(d) When using eyebolts in a tapped through-hole of less than one diameter thickness, a nut must be used under the load, and must be fully engaged and tightened securely against the load. (See Figure 31.)

(e) When eyebolts are used in an untapped through-hole, the nut under the load must be fully engaged. If the eyebolt is not shouldered to the load, a second nut on top of the load should be used if possible. (See Figure 31.)

Note: See Figure 31 for examples of eyebolts covered by this rule.

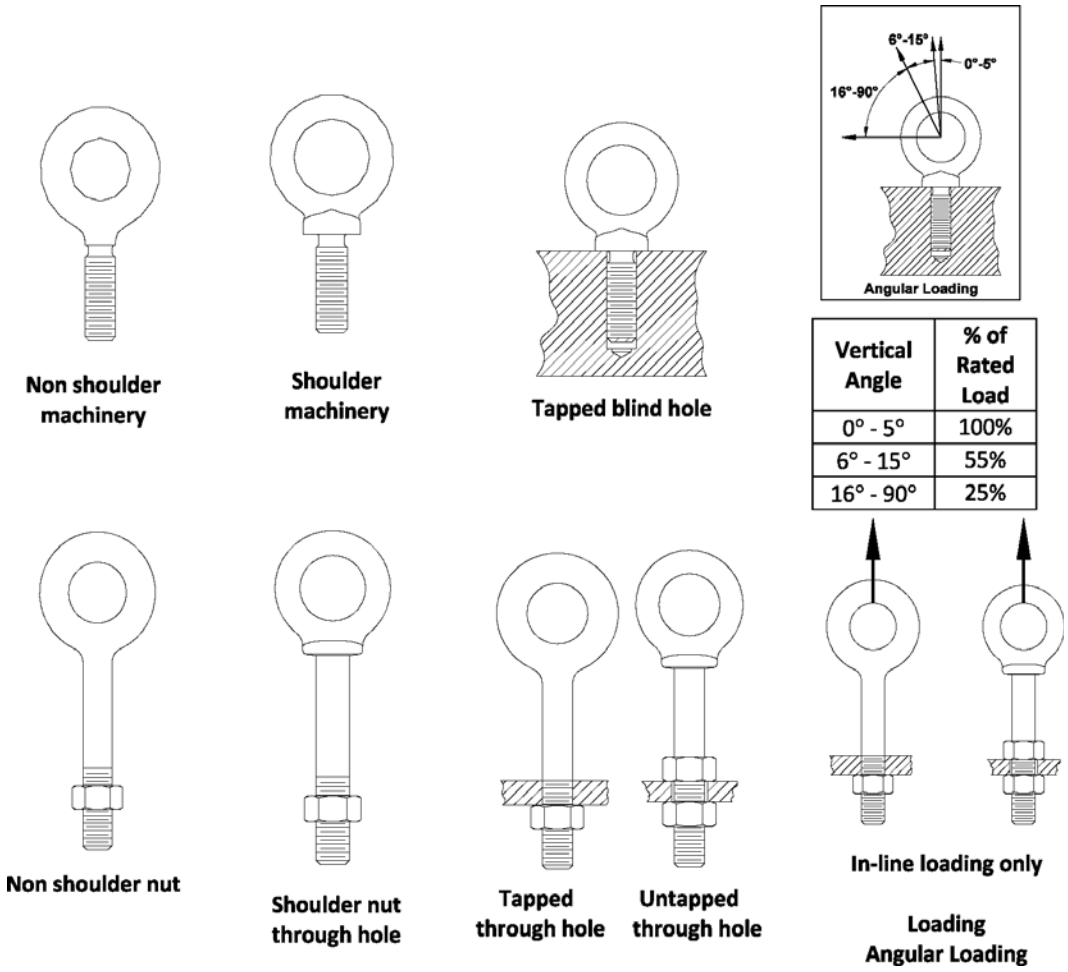

Figure 31
Eyebolts

(3) Eye nuts. Follow these rigging practices for eye nuts (see Figure 32, Eye Nuts):

(a) The threads of eye nuts must be fully engaged;

(b) Eye nuts must only be used for in-line loads;

(c) Components must be in good working condition prior to use.

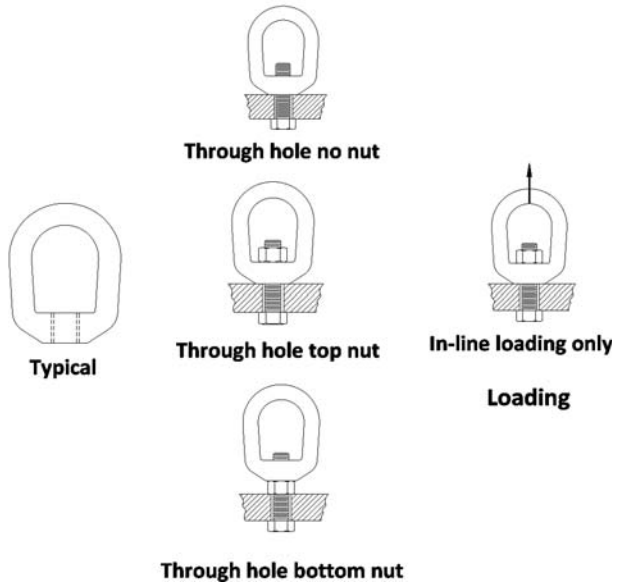

Figure 32
Eye Nuts

(4) Swivel hoist rings. Follow these rigging practices for swivel hoist rings:

(a) The swivel hoist ring working load limit (WLL) must meet or exceed the anticipated angular rigging tension. (See Figure 33, Angle of Loading.)

(b) Swivel hoist rings must be tightened to the torque specifications of the manufacturer.

(c) The swivel hoist ring must be free to rotate and pivot without interference during lifting. (See Figure 34, Swivel Hoist Rings.)

(d) The load applied to the swivel hoist ring must be centered in the bail to prevent side loading.

(e) Any attached lifting component must be narrower than the inside width of the bail to avoid spreading.

(f) When using swivel hoist rings in a threaded-hole, the effective thread length must be one and one-half times the diameter of the bolt for steel. (See Figure 34.) For other thread engagements or engagement in other materials, contact the manufacturer or a qualified person.

(g) When using swivel hoist rings in a through-hole application, a nut and washer must be used. A washer and nut must be in accordance with the manufacturer's recommendations. The nut must be fully engaged. (See Figure 34.)

(h) The bushing flange must fully contact the load surface. (See Figure 34.)

(i) Spacers or washers must not be used between the bushing flange and the mounting surface of the load being lifted.

Note: See Figure 34 for examples of swivel hoist rings covered by this rule.

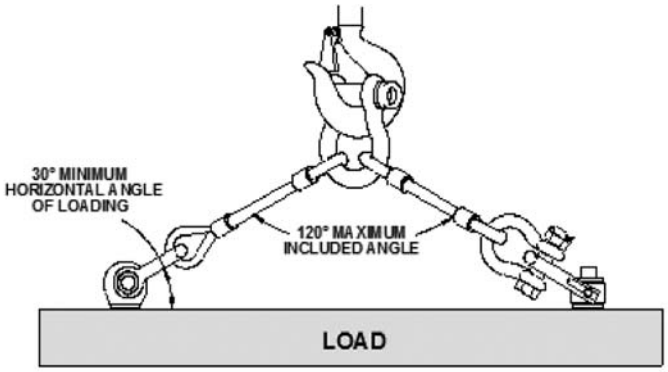

Figure 33
Angle of Loading (Adjustable Hardware)

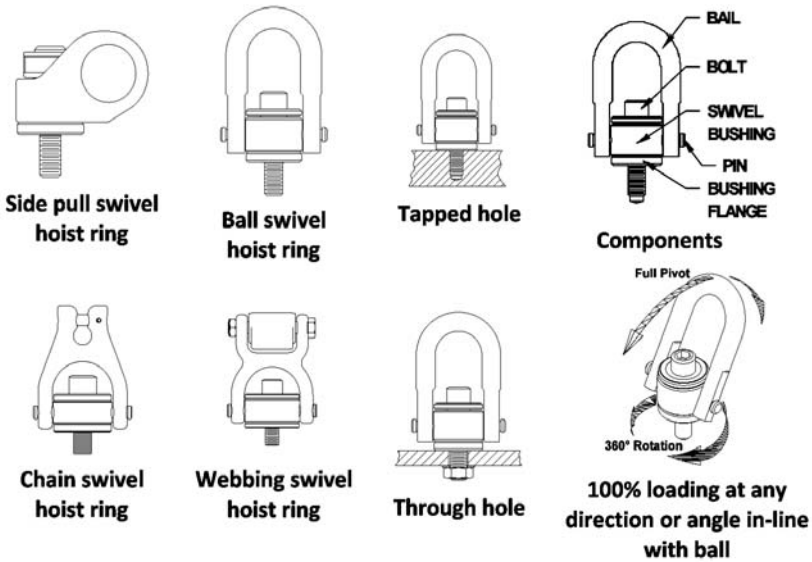

Figure 34
Swivel Hoist Rings

[Statutory Authority: RCW 49.17.010, 49.17.040, 49.17.050, 49.17.440, 49.17.060, and 29 C.F.R. 1926, Subpart CC. WSR 12-01-086, § 296-155-56110, filed 12/20/11, effective 2/1/12.]

WAC 296-155-56115 Compression hardware. (1) Wire rope clips. Follow these assembly requirements for wire rope clips:

(a) Before installing a wire rope clip on plastic coated or plastic impregnated wire rope, the wire rope clip manufacturer, wire rope manufacturer or a qualified person must be consulted.

(b) For U-bolt clips used to create end terminations, the saddle must be placed on the live end of the wire rope, with the U-bolt on the dead end side. (See Figure 35, Wire Rope Clips.)

(c) The assembly must be tested by loading the connection to at least the expected working load. After unloading, retighten the wire rope clips to the torque recommended by the manufacturer or a qualified person.

(d) Follow the manufacturer's recommendations for the minimum number of clips, spacing and turn-back measurements, and to the recommended torque values. In the absence of the manufacturer's recommendations follow Table 15.

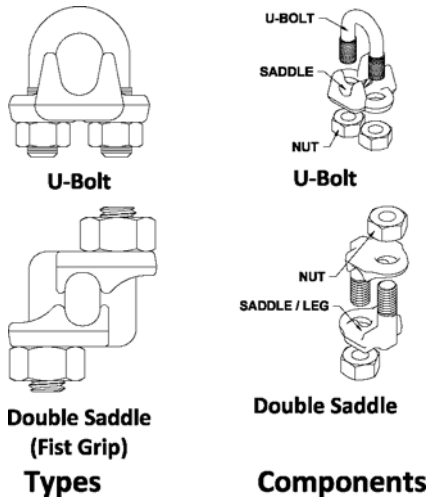

Figure 35
Wire Rope Clips

(2) Wedge sockets. Follow these assembly requirements for wedge sockets:

(a) Wedge sockets must be assembled as recommended by the manufacturer or a qualified person.

(b) Before installing a wedge socket on plastic coated or plastic impregnated wire rope the wedge socket manufacturer, wire rope manufacturer or a qualified person must be consulted.

(c) The assembler must match the proper wedge with the socket for the wire rope to be installed. Wedges must not be interchanged between different manufacturers' sockets or models.

(d) The live end of the wire rope in the wedge socket cavity must be in alignment with the socket's pin. (See Figure 36, Wedge Sockets.)

(e) The length of the dead end tail of the wire rope must be as required by the manufacturer or a qualified person.

(f) The tail of the dead end of the wire rope extending beyond the wedge socket must be secured as recommended by the wedge socket manufacturer or a qualified person.

(g) The dead end of the wire rope must not be secured to the live end of the wire rope in a way that restricts the movement of the live end. (See Figure 36.)

(h) After assembly the connection must be loaded to fully seat the wedge before use.

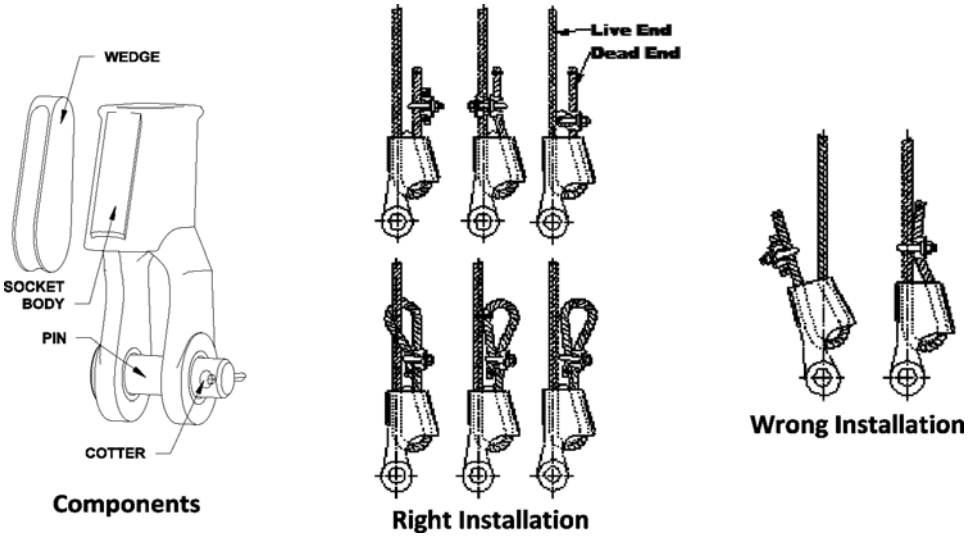

Figure 36
Wedge Sockets

[Statutory Authority: RCW 49.17.010, 49.17.040, 49.17.050, 49.17.440, 49.17.060, and 29 C.F.R. 1926, Subpart CC. WSR 12-01-086, § 296-155-56115, filed 12/20/11, effective 2/1/12.]

WAC 296-155-56120 Links, rings, and swivels. (1) Follow these rigging practices for links and rings:

(a) The link or ring must be of the proper shape and size to make sure it seats properly in the hook or lifting device.

(b) Multiple slings or rigging hardware gathered in a link or ring must not exceed a one hundred twenty degree included angle. (See Figure 33, Angle of Loading.)

Note: See Figure 37, Links and Rings, for examples of links and rings covered by this rule.

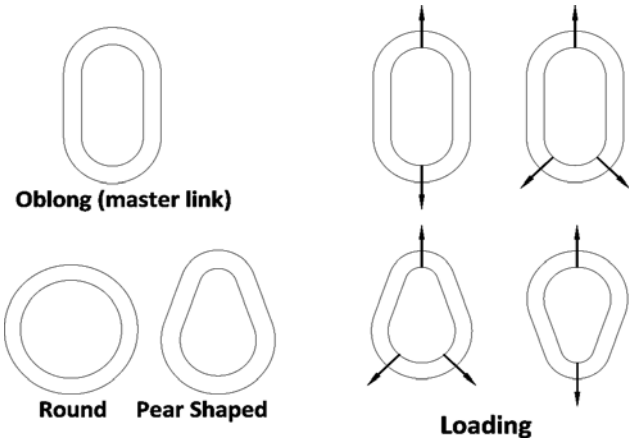

Figure 37
Links and Rings

(2) Follow these rigging practices for swivels:

(a) Swivels must only be used on in-line loads. (See Figure 38, Swivels.)

Note: Swivels are positioning hardware, and are not intended to be rotated under load.

(b) Swivels must be of the proper shape and size to make sure it seats correctly in the hook or lifting device.

(c) All swivel components must be kept in good working condition.

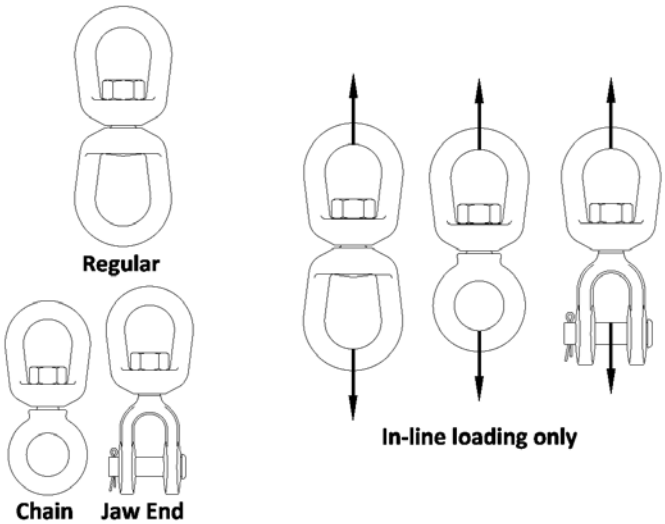

Figure 38
Swivels

[Statutory Authority: RCW 49.17.010, 49.17.040, 49.17.050, 49.17.440, 49.17.060, and 29 C.F.R. 1926, Subpart CC. WSR 12-01-086, § 296-155-56120, filed 12/20/11, effective 2/1/12.]

WAC 296-155-56125 Rigging blocks. (1) The rigging block components must be fully engaged, with all fasteners and retaining devices in place and in good working order before use.

(2) The rope must be in the sheave groove when the rigging block begins to take load.

(3) The load line multiplied by the block load factor must not exceed the rated load of the rigging block. (See Figure 39, Block Load Factor Multipliers.)

(4) Load line fittings must not contact the rigging block sheave(s).

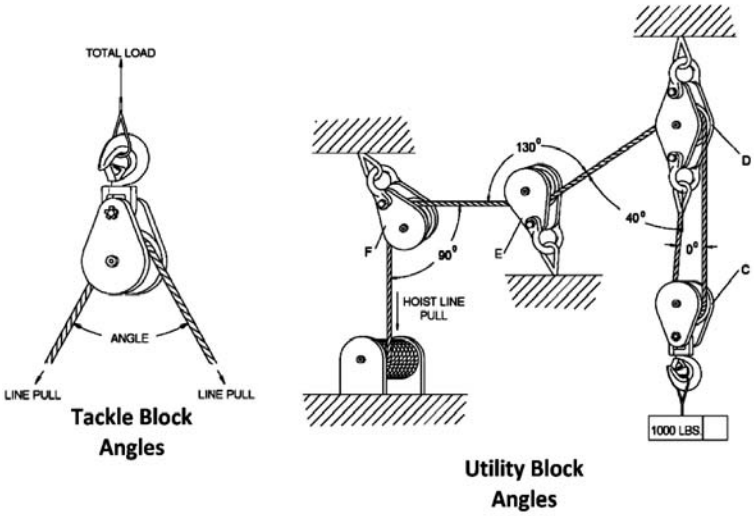

Angle	Factor	Angle	Factor
0°	2.00	100°	1.29
10°	1.99	110°	1.15
20°	1.97	120°	1.00
30°	1.93	130°	.84
40°	1.87	135°	.76
45°	1.84	140°	.68
50°	1.81	150°	.52
60°	1.73	160°	.35
70°	1.64	170°	.17
80°	1.53	180°	.00
90°	1.41	—	—

Block Load = Line Pull X Multiplier Factor

Figure 39
Block Load Factor Multipliers

Example: Load = 1,000 lb

Line Pull: 1,000 lb ÷ 2 = 500 lb

Load Block "C" = 500 lb x 2 = 1,000 lb

(line pull x factor for 0 deg. angle)

Load Block "D" = 500 lb x 1.87 + 500 lb = 1,435 lb

(line pull x factor for 40 deg. angle + dead-end load)

Load Block "E" = 500 lb x 0.84 = 420 lb

(line pull x factor for 130 deg. angle)

Load Block "F" = 500 lb x 1.41 = 705 lb

(line pull x factor for 90 deg. angle)

[Statutory Authority: RCW 49.17.010, 49.17.040, 49.17.050, 49.17.440, 49.17.060, and 29 C.F.R. 1926, Subpart CC. WSR 12-01-086, § 296-155-56125, filed 12/20/11, effective 2/1/12.]

WAC 296-155-562 Lifting devices other than slings and rigging hardware.

[Statutory Authority: RCW 49.17.010, 49.17.040, 49.17.050, 49.17.440, 49.17.060, and 29 C.F.R. 1926, Subpart CC. WSR 12-01-086, § 296-155-562, filed 12/20/11, effective 2/1/12.]

WAC 296-155-56200 Structural and mechanical lifters. (1) Structural and mechanical lifting devices must be constructed in accordance with ASME B30.20-2010, Below-the-Hook Lifting Devices.

(2) The rated load of the lifting device must be legibly marked on the main structure or on a tag attached to it where it is visible. If the lifting device is made up of several lifters, each detachable from the group, these lifters must also be marked with their individual rated loads.

(3) All structural and mechanical lifting devices must be marked with the following information:

(a) Manufacturer's name and address;

(b) Serial number;

(c) Lifter weight, if over one hundred pounds (45 kg);

(d) Rated load as required in subsection (2) of this section;

(e) Name and address of repairer or modifier, when the lifting device has been repaired or modified.

(4) Installation.

(a) Structural and mechanical lifters must be assembled and installed according to manufacturer's instructions.

(b) The installer must check for correct rotation of all motors.

(5) Inspection.

(a) A qualified person must inspect all new, altered, repaired, or modified lifting devices according to Tables 30 and 31. The inspection of altered, repaired or modified lifting devices can be limited to the parts affected, if a qualified person determines that is all that is needed.

(b) The operator must inspect the lifting device before and during every lift for any indication of damage. Check the following items:

(i) Surface of the load for debris;

(ii) Condition and operation of the controls; and

(iii) Condition and operation of the indicators and meters when installed.

(c) Lifting devices must be inspected, by the operator or another competent person, according to Table 30.

(i) If any damage is found, have a qualified person determine whether there is a hazard.

(ii) Hazardous conditions must be corrected before continuing use.

Table 30
Structural and Mechanical Lifter Frequent Inspection

Inspect for:	How often:
Structural members for: • Deformation. • Cracks. • Excessive wear on any part of the lifter.	• Normal service - Monthly. • Heavy service - Weekly to monthly. • Severe service - Daily to weekly. • Special or infrequent service - As recommended by a qualified person before and after each occurrence. • Before use, when any lifter has been idle for at least one month.
The device for: • Loose or missing: - Guards. - Fasteners. - Covers. - Stops. - Nameplates.	
• All functional operating mechanisms for maladjustments interfering with operation.	
• Automatic hold-and-release mechanisms for maladjustments interfering with operation.	

Note:
• Normal service means service that involves operation with various weights within the rated load limit, averaging less than sixty-five percent of rated load limits.
• Heavy service means service that involves operation within the rated load limit, that exceeds the limits of normal service.
• Severe service means service that involves normal or heavy service with abnormal operating conditions.

(d) A qualified person must perform a periodic inspection on structural and mechanical lifters according to Table 31. Include the items in Table 30 of this section.

(i) Hazardous conditions must be corrected before continuing use.

(ii) Dated inspection reports must be kept of the most recent periodic inspection.

Table 31
Structural and Mechanical Lifting Device Periodic Inspection

Inspect for:	How often:
Loose bolts or fasteners.	• Normal service for equipment in place - Yearly.
Cracked or worn gear, pulleys, sheaves, sprockets, bearings, chains, and belts.	• Heavy service - Semi-annually.
Excessive wear of friction pads, linkages, and other mechanical parts.	• Severe service - Quarterly.
Excessive wear at hoist hooking points and load support clevises or pins.	• Special or infrequent service - As recommended by a qualified person before the first such occurrence and as directed by the qualified person for any subsequent occurrences.

Note: • Normal service means service that involves operation with various weights within the rated load limit, averaging less than sixty-five percent of rated load limits.
• Heavy service means service that involves operation within the rated load limit, that exceeds the limits of normal service.
• Severe service means service that involves normal or heavy service with abnormal operating conditions.

(6) Operational tests.

(a) A qualified person must perform an operational test on new, altered, repaired, or modified lifters before use. The qualified person can limit the testing of altered, repaired or modified lifters to the parts affected.

(b) The following items must be tested:

(i) Lifters with moving parts must be tested to determine that the lifter operates according to the manufacturer's instructions.

(ii) Lifters with manually operated or automatic latches must be tested to determine that the latch operates according to manufacturer's instructions.

(iii) All indicator lights, gages, horns, bells, alarms, pointers, and other warning devices must be tested.

(c) Dated reports of all operational tests must be kept on file.

(7) Repair.

(a) Structural and mechanical lifting devices must be repaired as follows:

(i) Adjustments and testing must be done only by a qualified person;

(ii) Replacement parts used must be at least equal to the original manufacturer's specifications;

(iii) The device must be inspected according to subsection (5) of this section before returning to service.

(b) The following precautions must be taken before repairs on a lifting device are started:

(i) Disconnect, lock out and tag all sources of power "Out of Service," if applicable;

(ii) Tag the lifting device removed from service for repair "Out of Service."

(8) Lifting devices must be operated only by qualified personnel.

(9) Operators must do the following:

(a) Test all controls before use, each shift;

(b) Consult a competent person before handling the load whenever there is any doubt as to safety;

(c) Respond only to instructions from competent persons, except for stop signals. The operator must obey a stop order at all times, no matter who gives it;

(d) Do not load the lifting device in excess of its rated load or with any load that it is not specifically designed for;

(e) Apply the lifter to the load according to the instruction manual;

(f) Check that:

(i) Lifter ropes or chains are not kinked.

(ii) Multiple part lines are not twisted around each other.

(g) Bring the lifter over the load in a way that minimizes swinging;

(h) Keep the load or lifter from contacting any obstruction;

(i) Set down any attached load and store the lifting device before leaving it;

(j) Check that all personnel are clear of the load;

(k) Using the lifter for side pulls or sliding the load is prohibited, unless specifically authorized by a qualified person;

(l) Riding on loads or the lifting device is prohibited.

[Statutory Authority: RCW 49.17.010, 49.17.040, 49.17.050, 49.17.440, 49.17.060, and 29 C.F.R. 1926, Subpart CC. WSR 12-01-086, § 296-155-56200, filed 12/20/11, effective 2/1/12.]

WAC 296-155-56205 Vacuum lifters. (1) Vacuum lifting devices must be constructed in accordance with ASME B30.20-2010, Below-the-Hook Lifting Devices.

(2) Rated load.

(a) The rated load of each lifter and each pad must be legibly marked on the main structure or on a tag attached to it where it is visible. The marking must refer to the instruction manual for information about decreases in rating due to loads:

(i) Rigidity;

(ii) Strength;

(iii) Overhang;

(iv) Surface condition;

(v) Angle of load;

(vi) Temperature;

(vii) Number of pads;

(viii) Elevation and vacuum level.

(b) If the vacuum lifting device has shut-off valves on individual pads or groups of pads, the rated load of each pad must also be marked.

(3) The vacuum lifter must be clearly marked on the main structure with all of the following:

(a) Manufacturer's name and address;

(b) Model number;

(c) Serial number;

(d) Lifter weight;

(e) Electrical power requirements, if applicable;

(f) Pressure and volume of compressed air required, if applicable;

(g) Rated load, as required in subsection (2) of this section;

(h) If repaired or modified, the name, address, and lifter identification of repairer or modifier.

(4) Installation.

(a) Vacuum lifters must be assembled and installed according to manufacturer's instructions.

(b) The installer must check:

(i) That the power supply is the same as what is shown on the nameplate.

(ii) For correct rotation of all motors.

(c) Connect the electrical power supply to the vacuum lifter to either:

(i) The line side of the crane disconnect; or

(ii) An independent circuit.

(5) Inspection.

(a) A qualified person must inspect all new, altered, repaired, or modified vacuum lifters. A qualified person can limit the inspection of altered, repaired or modified lifters to the affected parts.

(b) The operator must inspect the lifter before and during every lift for any indication of damage, including all of the following:

(i) Surface of the load for debris;

(ii) Seal of the vacuum pad for debris;

(iii) Condition and operation of the controls;

(iv) Condition and operation of the indicators, meters and pumps when installed.

(c) Lifters must be inspected, by the operator or another competent person, according to Table 32.

(d) A qualified person must determine whether signs of damage indicate a hazard.

(e) Hazardous conditions must be corrected before continuing use.

(f) A qualified person must perform a periodic inspection of vacuum lifters according to Table 33. Include the items in Table 32 of this section.

(g) Dated inspection records must be kept on all critical items such as supporting structure, motors, controls, and other auxiliary components.

(h) Hazardous conditions must be corrected before continuing use.

Table 32
Vacuum Lifter Frequent Inspection

Inspect:	How often:
Structural members for: • Deformation. • Cracks. • Excessive wear.	• Normal service - Monthly. • Heavy service - Weekly to monthly. • Severe service - Daily to weekly. • Special or infrequent service - As recommended by a qualified person before and after each occurrence.
The vacuum generator for output.	• Before using, when a lifting device has been idle for more than one month.
The vacuum pad seal rings for: • Cuts. • Tears. • Excessive wear. • Foreign particles. Vacuum lines and connections for: • Leakage. • Cuts. • Kinks. • Collapsed areas of hoses.	
The vacuum reservoir for: • Leaks. • Visible damage.	
The entire vacuum system including indicator lights, gages, horns, bells, pointers or other warning devices, and vacuum level indicators: • Attach a nonporous, clean surface to the vacuum pad or pads. • Stop the vacuum source. • Check that the vacuum level in the system does not decrease by more than the manufacturer's specified rate.	

Table 33
Vacuum Lifting Device Periodic Inspection

Inspect for:	How often:
External evidence of: • Looseness. • Wear. • Deformation.	• Normal service for equipment in place - Yearly. • Heavy service - Semi-annually. • Severe service - Quarterly.

Inspect for:	How often:
• Cracking. • Corrosion.	• Special or infrequent service - As recommended by a qualified person before the first such occurrence and as directed by the qualified person for any subsequent occurrences.
External evidence of damage to: • Supporting structure. • Motors. • Controls. • Other auxiliary components.	
Clear warning labels.	

Note:
• Normal service means service that involves operation with various weights within the rated load limit, averaging less than sixty-five percent of rated load limits.
• Heavy service means service that involves operation within the rated load limit, that exceeds the limits of normal service.
• Severe service means service that involves normal or heavy service with abnormal operating conditions.

(6) Operational tests.

(a) A qualified person must perform an operational test on new, altered, repaired, or modified vacuum lifters before use. The qualified person can limit the testing of altered, repaired or modified lifters to the parts affected.

(b) The following items must be tested:

(i) Moving parts;

(ii) Latches;

(iii) Stops;

(iv) Limit switches;

(v) Control devices;

(vi) Vacuum lines;

(vii) The seals and connections must be tested for leaks by attaching a smooth nonporous clean material to the vacuum pad or pads and then stopping the vacuum source. The vacuum level in the system must not decrease more than the manufacturer's specified rate.

(c) Dated reports of all operations tests must be kept on file.

(7) Load tests.

(a) Prior to initial use, all new, altered, repaired, or modified vacuum lifting devices must be load tested and inspected by a qualified person. The qualified person can limit the test to the areas affected by the alteration, repair or modification.

(b) Test loads must not be more than one hundred twenty-five percent of the rated load of the system, unless otherwise recommended by the manufacturer or a qualified person.

(c) Written reports must be kept confirming the load rating of the vacuum lifting device.

(d) The load test must consist of one of the following procedures:

(i) Actual load test:

(A) Attach pads to the designated test load.

(B) Raise the test load a small distance to make sure the load is supported by the vacuum-lifting device.

(C) Hold the load for two minutes.

(D) Lower the load for release.

(ii) Simulated load test. Using a test fixture, apply forces to all load bearing components either individually or in assemblies equivalent to the forces encountered by the components if they were supporting a load that was one hundred twenty-five percent of the rated load.

(e) After the test, the vacuum lifting device must be visually inspected. Any condition that constitutes a hazard must be corrected before the lifting device is placed in service. If the correction affects the structure, then the lifter must be retested.

(8) Repair.

(a) Repair vacuum lifting devices as follows:

(i) Adjustments and testing must be done only by a qualified person;

(ii) Use replacement parts that are at least equal to the original manufacturer's specification;

(iii) The lifting device must be inspected before returning to service as required in subsection (5) of this section.

(b) Take the following precautions before repairs on a lifting device are started:

(i) Move the vacuum-lifting device to an area where it will cause the least interference with other operations;

(ii) Disconnect, lock out and tag all sources of power "Out of Service," if applicable;

(iii) Tag the lifting device removed from service for repair "Out of Service."

(9) Lifting devices must be operated only by qualified personnel.

(10) Operators must do the following:

(a) Test all controls before use during a shift;

(b) Consult a competent person before handling the load whenever safety is in doubt;

(c) Respond only to instructions from competent persons, except for stop orders. The operator must obey a stop order at all times, no matter who gives it;

(d) Do not load the lifter in excess of its rated load or with any load that it isn't specifically designed for;

(e) Apply the lifter to the load according to the manufacturer's instructions;

(f) Check that:

(i) Ropes or chains are not kinked.

(ii) Multiple part lines are not twisted around each other.

(iii) The pad contact surface is clean and free of loose particles.

(g) Check that vacuum lines are not:

(i) Kinked or twisted.

(ii) Wrapped around or looped over parts of the lifting device that will move during the lift.

(h) Bring the lifter over the load in a way that minimizes swinging;

(i) Lift the load a few inches to make sure that the lifting device was correctly applied;

(j) Keep the load or lifter from contacting any obstruction;

(k) Do the following if power goes off while making a lift:

(i) Warn all people in the area;

(ii) Set the load down if possible.

(l) Set down any attached load and store the lifting device before leaving it;

(m) Check that all personnel are clear of the load;

(n) Using the lifter for side pulls or sliding the load is prohibited, unless specifically authorized by a qualified person;

(o) Riding on the load or the lifter is prohibited.

[Statutory Authority: RCW 49.17.010, 49.17.040, 49.17.050, 49.17.440, 49.17.060, and 29 C.F.R. 1926, Subpart CC. WSR 12-01-086, § 296-155-56205, filed 12/20/11, effective 2/1/12.]

WAC 296-155-56210 Close proximity lifting magnets. (1) Close proximity lifting magnets must be constructed in accordance with ASME B30.20-2010, Below-the-Hook Lifting Devices.

(2) Rated load.

(a) General application magnets must have the rated load (capacity) marked either on the lifting magnet or on a tag attached to it. The marking must refer to the instruction manual for information about decreases in rating due to the loads.

(i) Surface condition.

(ii) Thickness.

(iii) Percentage of contact with the magnet.

(iv) Temperature.

(v) Metallurgical composition.

(vi) Deflection.

(b) Specified application magnets must have the rated load (capacity) either on the lifting magnet or on a tag attached to it, referring to the specific loads for which the capacity applies.

(3) Identification. All close proximity lifting magnets must be marked with the following information:

(a) Manufacturer's name and address;

(b) Model and lifting magnet unit identification;

(c) Weight of lifting magnet;

(d) Rated load, as required in subsection (2) of this section;

(e) Duty cycle, if applicable;

(f) Cold current (amps) at sixty-eight degrees Fahrenheit (twenty degrees Celsius), if applicable; and

(g) Voltage of primary power supply or battery, if applicable.

(h) If repaired or modified, name and address of repairer or modifier and (a) through (g) of this subsection if changed.

(4) Lifting magnets must be installed according to manufacturer's instructions.

(5) Inspection.

(a) A qualified person must inspect all new, altered, repaired, or modified lifting magnets according to Tables 34 and 35. The inspection of altered, repaired or modified lifting magnets can be limited to the parts affected, if a qualified person determines that is all that is needed.

(b) The operator must inspect the lifting magnet before and during every lift for any indication of damage. Check all of the following items:

(i) Lifting magnet face and surface of the load for foreign materials and smoothness;

(ii) Condition and operation of the:

(A) Control handle of a manually controlled permanent magnet;

(B) Indicators and meters when installed.

(c) Lifting magnets must be inspected, by the operator or another competent person, according to Table 34.

(d) A qualified person must determine whether signs of damage indicate a hazard.

(e) Hazardous conditions must be corrected before continuing use.

Table 34
Close Proximity Lifting Magnet Frequent Inspection

Inspect:	How often:
Structural and suspension members for: • Deformation. • Cracks. • Excessive wear on any part of the lifting magnet.	• Normal service - Monthly. • Heavy service - Weekly to monthly. • Severe service - Daily to weekly. • Special or infrequent service - As recommended by a qualified person before and after each occurrence.
The lifting magnet face for: • Foreign materials. • Smoothness.	• Before using, when a lifting magnet has been idle for more than one month.
Condition of lifting bail or sling suspension.	
Condition and operation of control handle.	
Condition and operation of indicators and meters, if applicable.	
Electrical conductors, if applicable, that are visible without disassembly for: • Loose connections. • Continuity. • Corrosion. • Damage to insulation.	
Battery operated electromagnets for: • Proper level of battery electrolyte. • Corrosion of battery posts or connectors.	

Inspect:	How often:
Cracked housings, welds, and loose bolts.	
Legible labels and marking.	

Note:
- Normal service means service that involves operation with various weights within the rated load limit, averaging less than sixty-five percent of rated load limits.
- Heavy service means service that involves operation within the rated load limit, that exceeds the limits of normal service.
- Severe service means service that involves normal or heavy service with abnormal operating conditions.

(f) A qualified person must perform periodic inspections of close proximity lifting magnets according to Table 35. Include the items in Table 34 of this section.

(g) Dated inspection records must be kept on all critical items such as structural and suspension members, lifting magnet face, lifting bail, control handle, indicators and meters.

(h) Hazardous conditions must be corrected before continuing use.

Table 35
Close Proximity Lifting Magnet Periodic Inspection

Inspect:	How often:
Members, fasteners, locks, switches, warning labels, and lifting parts for:	
• Deformation.	• Normal service for equipment in place - Yearly.
• Wear.	
• Corrosion.	• Heavy service, unless external conditions indicate that disassembly should be done to permit detailed inspection - Quarterly.
All electrical components, including controllers, battery, external power supply, power disconnects, meters, indicators, and alarms for:	
• Proper operation.	• Severe service - Monthly.
• Condition.	• Special or infrequent service - As recommended by a qualified person before the first occurrence and as directed by the qualified person for any subsequent occurrences.
Lifting magnet coil must be tested for:	
• Ohmic and ground readings compared to manufacturer's standards.	

Note:
- Normal service means service that involves operation with various weights within the rated load limit, averaging less than sixty-five percent of rated load limits.
- Heavy service means service that involves operation within the rated load limit, that exceeds the limits of normal service.
- Severe service means service that involves normal or heavy service with abnormal operating conditions.

(6) Operational tests.

(a) All new, altered, repaired or modified lifting magnets must be tested either by or under the direction of a qualified person before use. The qualified person can limit the testing of altered, repaired or modified lifting magnets to the parts affected.

(b) The following items must be tested:

(i) Moving parts;

(ii) Latches;

(iii) Stops;

(iv) Switches;

(v) Control devices;

(vi) Alarms; and

(vii) Warning devices, including:

(A) Indicator lights;

(B) Gauges;

(C) Horns;

(D) Bells; and

(E) Pointers.

(c) Dated reports of all operational tests must be kept on file.

(7) Load tests.

(a) Prior to initial use, all new, altered, repaired, or modified close proximity lifting devices must be load tested and inspected by a qualified person. The qualified person can limit the test to the areas affected by the alteration, repair, or modification.

(b) The breakaway force of lifting magnets must be tested according to manufacturer's directions or ANSI B30.20-2010.

(8) Repair.

(a) Close proximity lifting magnets must be repaired as follows:

(i) Adjustments and testing must be done by or under the direction of a qualified person;

(ii) Replacement parts used must be at least equal to the original manufacturer's specifications;

(iii) The magnet must be inspected before returning to service as required in subsection (5) of this section.

(b) The following precautions must be taken before repairs on a magnet are started:

(i) Disconnect, lock out and tag all sources of power "Out of Service," if applicable; and

(ii) Tag any lifting magnet removed from service for repair "Out of Service."

(9) Lifting magnets must be operated only by qualified personnel.

(10) Operators must do the following:

(a) Test all controls before use, each shift;

(b) Check all meters and indicators for proper operation before making a lift;

(c) Consult a competent person before handling the load whenever there is any doubt as to safety;

(d) Respond only to instructions from competent persons, except for stop orders. Operators must obey a stop order at all times, no matter who gives it;

(e) Do not load the lifting magnet in excess of its rated load or with any load that it isn't specifically designed for;

(f) Apply the magnet to the load according to the instruction manual;

(g) Check that:

(i) Lifter ropes or chains are not kinked;

(ii) Multiple part lines are not twisted around each other;

(iii) The lifting magnet face and the contact area on the load are clean.

(h) Bring the magnet over the load in a way that minimizes swinging;

(i) Lift the load a few inches to make sure that the lifting magnet has been correctly applied;

(j) Keep the load or lifting magnet from contact with any obstruction;

(k) Set down any attached load and store the lifting magnet before leaving it;

(l) Check that all people near the lift are warned before lifting;

(m) Using the lifter for side pulls or sliding the load is prohibited, unless specifically authorized by a qualified person; and

(n) Riding on loads or the lifting magnet is prohibited.

[Statutory Authority: RCW 49.17.010, 49.17.040, 49.17.050, 49.17.440, 49.17.060, and 29 C.F.R. 1926, Subpart CC. WSR 12-01-086, § 296-155-56210, filed 12/20/11, effective 2/1/12.]

WAC 296-155-56215 Remotely operated lifting magnets. (1) Remotely operated lifting magnets must be constructed in accordance with ASME B30.20-2010, Below-the-Hook Lifting Devices.

(2) Identification. All remotely operated lifting magnets must be marked with the following information:

(a) Manufacturer's name and address;

(b) Model or unit identification;

(c) Weight of lifting magnet;

(d) Duty cycle;

(e) Cold current;

(f) Voltage;

(g) If repaired or modified, name and address of repairer or modifier and (a) through (g) of this subsection if changed.

(3) Lifting magnets must be installed according to manufacturer's instructions.

(4) Inspections.

(a) A qualified person must inspect all new, altered, repaired or modified lifting magnets according to Tables 36 and 37. A qualified person can limit the inspection of altered, repaired or modified lifting magnets to the parts affected.

(b) Lifting magnets must be inspected, by the operator or another competent person, according to Table 36.

(c) A qualified person must determine whether signs of damage indicate a hazard.

(d) Hazardous conditions must be corrected before continuing use.

(e) A qualified person must perform periodic inspections of remotely operated lifting magnets according to Table 37. Include the items in Table 36.

(f) Make records of apparent external conditions to provide the basis for a continuing evaluation.

(g) Hazardous conditions must be corrected before continuing use.

Table 36

Remotely Operated Lifting Magnet Frequent Inspection

Inspect:	How often:
Structural and suspension members for: • Deformation. • Cracks. • Excessive wear on any part of the lifting magnet.	• Normal service - Monthly. • Heavy service - Weekly to monthly. • Severe service - Daily to weekly. • Special or infrequent service - As recommended by a qualified person before and after each occurrence.
The lifting magnet face for: • Foreign materials. • Smoothness.	• Before using, when a lifting magnet has been idle for more than one month.
Electrical conductors that are visible without disassembly.	
Cracked housings, welds, and loose bolts.	

Note:
• Normal service means service that involves operation with various weights within the rated load limit, averaging less than sixty-five percent of rated load limits.
• Heavy service means service that involves operation within the rated load limit, that exceeds the limits of normal service.
• Severe service means service that involves normal or heavy service with abnormal operating conditions.

Table 37

Remotely Operated Lifting Magnet Periodic Inspection

Inspect:	How often:
Members, fasteners, and lifting parts for: • Deformation. • Wear.	• Normal service for equipment in place - Yearly. • Heavy service - Quarterly. • Severe service - Monthly.

Inspect:	How often:
• Corrosion.	• Special or infrequent service - As recommended by a qualified person before the first occurrence and as directed by the qualified person for any subsequent occurrences.
All electrical components for: • Proper operation. • Condition.	
Magnet coil for: • Ohmic and ground readings compared to manufacturer's standards.	

(5) Operational tests.

(a) All new, altered, repaired or modified lifting magnets must be tested either by or under the direction of a qualified person before use. The qualified person can limit the testing of altered, repaired or modified lifting magnets to the parts affected.

(b) The following items must be tested:

(i) All electrical equipment for proper operation;

(ii) Warning devices, including:

(A) Indicator lights;

(B) Gauges;

(C) Horns;

(D) Bells; and

(E) Pointers.

(c) Dated reports of all operational tests must be kept on file.

(6) Repair.

(a) Remotely operated lifting magnets must be repaired as follows:

(i) Have adjustments and testing done only by or under the direction of a qualified person;

(ii) Use replacement parts that are at least equal to the original manufacturer's specifications; and

(iii) Inspect the lifter according to subsection (4) of this section, before returning to service.

(b) The following precautions must be taken before repairs on a lifter are started:

(i) Disconnect, lock out and tag all sources of power "Out of Service."

(ii) Tag any magnet removed from service for repair "Out of Service."

(7) Lifting devices must be operated only by qualified personnel.

(8) Operators must do the following:

(a) Test all controls before use during a shift;

(b) Consult a competent person before handling the load whenever there is any doubt as to safety;

(c) Respond only to instructions from competent persons, except for stop orders. Operators must obey a stop order at all times, no matter who gives it;

(d) Do not load the lifting magnet in excess of its rated load or with any load that it is not specifically designed for;

(e) Apply the lifting magnet to the load according to the instruction manual;

(f) Check that:

(i) Lifter ropes or chains are not kinked;

(ii) Multiple part lines are not twisted around each other.

(g) Bring the lifting magnet over the load in a way that minimizes swinging;

(h) Keep the load or magnet from contact with any obstruction;

(i) Set down any attached load and store the lifting magnet before leaving it;

(j) Check that all people are clear of the load;

(k) Using the lifter for side pulls or sliding the load is prohibited, unless specifically authorized by a qualified person; and

(l) Riding on loads or the lifting magnet is prohibited.

[Statutory Authority: RCW 49.17.010, 49.17.040, 49.17.050, 49.17.440, 49.17.060, and 29 C.F.R. 1926, Subpart CC. WSR 12-01-086, § 296-155-56215, filed 12/20/11, effective 2/1/12.]

WAC 296-155-56220 Scrap and material handling grapples. (1) Grapples must be constructed in accordance with ASME B30.20-2010, Below-the-Hook Lifting Devices.

(2) Identification. All grapples must be marked with the following information:

(a) Manufacturer's name and address;

(b) Serial number or unit identification;

(c) Grapple weight;

(d) Rated voltage, if applicable;

(e) Operating hydraulic pressure(s), if applicable;

(f) Rated capacity;

(g) If repaired or modified, name and address of repairer or modifier and (a) through (f) of this subsection if changed.

(3) Grapple installation.

(a) Grapples must be installed according to manufacturer's instructions.

(b) The hydraulic flows and pressures must be the same as shown in the manufacturer's instructions.

(4) Inspections.

(a) A qualified person must inspect all new, altered, repaired and modified grapples according to Table 38. A qualified person can limit the inspection of altered, repaired or modified grapples to the parts affected.

(b) Grapples must be visually inspected each shift they are used, by the operator or another competent person, according to Table 38.

(c) A qualified person must determine whether signs of damage indicate a hazard.

(d) Hazardous conditions must be corrected before continuing use.

Table 38
Grapple Frequent Inspection

Inspect:	How often:
Structural members for: • Deformation. • Cracks.	• Normal service - Monthly. • Heavy service - Weekly to monthly. • Severe service - Daily to weekly.

Inspect:	How often:
• Excessive wear on any part of the grapple.	• Special or infrequent service - As recommended by a qualified person before and after each occurrence. • Before using, when a grapple has been idle for more than one month.
Pins and bushings.	
Hydraulic lines.	
Hydraulic cylinders.	
Loose bolts.	
Electrical conductors that are visible without disassembly.	

Note:
• Normal service means service that involves operation with various weights within the rated load limit, averaging less than sixty-five percent of rated load limits.
• Heavy service means service that involves operation within the rated load limit, that exceeds the limits of normal service.
• Severe service means service that involves normal or heavy service with abnormal operating conditions.

(e) A qualified person must perform a periodic inspection of grapples according to Table 39. Include the items from Table 38 of this section.

(f) Data inspection reports must be kept on critical items such as structural members, fasteners, lifting parts, hydraulic hoses, fittings and tubing, hydraulic motors and hydraulic cylinders.

(g) Hazardous conditions must be corrected before continuing use.

Table 39
Grapple Periodic Inspection

Inspect:	How often:
Members, fasteners, and lifting parts for: • Deformation. • Wear. • Corrosion.	• Normal service for equipment in place - Yearly. • Heavy service, unless external conditions indicate that disassembly should be done to permit detailed inspection - Quarterly. • Severe service - Monthly. • Special or infrequent service - As recommended by a qualified person before the first occurrence and as directed by the qualified person for any subsequent occurrences.
Hydraulic hose, fittings, and tubing for: • Evidence of leakage at the surface of the hose or its junction with metal couplings. • Blistering or abnormal deformation of the outer covering of the hose. • Leakage at threaded or clamped joints that cannot be eliminated by normal tightening or recommended procedures. • Excessive abrasion or scrubbing on the outer surface of hoses, rigid tubes, or fittings.	
Hydraulic motors for: • Loose bolts or fasteners. • Leaks at joints between sections. • Shaft seal leaks. • Unusual noises or vibration. • Loss of operating speed. • Excessive heating of the fluid. • Loss of pressure.	
Hydraulic cylinders for: • Drifting caused by fluid leaking across the piston seals. • Rod seal leakage. • Leaks at welded joints. • Scored, nicked, or dented cylinder rods. • Dented case (barrel). • Loose or deformed rod eyes or connecting joints.	
All electrical components, including meters, indicators and alarms for: • Proper operation. • Condition.	

(5) Operational tests.

(a) All new, altered, repaired or modified grapples must be tested either by or under the direction of a qualified person before use. The qualified person can limit the testing of altered, repaired or modified grapples to the parts affected.

(b) All warning devices must be tested, including:

(i) Indicator lights;

(ii) Gauges;

(iii) Horns;

(iv) Bells;

(v) Pointers;

(vi) Other warning devices.

(c) Dated reports of all operational tests must be kept on file.

(6) Repair.

(a) Grapples must be repaired as follows:

(i) Have adjustments and testing done only by or under the direction of a qualified person;

(ii) Use replacement parts that are at least equal to the original manufacturer's specifications;

(iii) Inspect the grapple according to subsection (4) of this section, before returning to service;

(b) The following precautions must be taken before repairs on a grapple are started:

(i) Disconnect, lock out and tag all sources of power "Out of Service";

(ii) Tag any grapple removed from service for repair "Out of Service."

(7) Grapples must be operated only by qualified personnel.

(8) Operators must do the following:

(a) Test all controls before use during a shift;

(b) Check all meters and indicators for proper operation before making a lift;

(c) Consult a competent person before handling the load whenever there is any doubt as to safety;

(d) Respond only to instructions from competent persons, except for stop orders. An operator must obey a stop order at all times, no matter who gives it;

(e) Do not load grapples in excess of the rated load or with any load that they are not specifically designed for;

(f) Apply the grapple to the load according to the instruction manual;

(g) Bring the grapple over the load in a way that minimizes swinging;

(h) Keep the load or grapple from contact with any obstruction;

(i) Set down any attached load and store the grapple before leaving it;

(j) Don't let anyone ride on loads or the grapple;

(k) Check that all people stay clear of the load.

[Statutory Authority: RCW 49.17.010, 49.17.040, 49.17.050, 49.17.440, 49.17.060, and 29 C.F.R. 1926, Subpart CC. WSR 12-01-086, § 296-155-56220, filed 12/20/11, effective 2/1/12.]

WAC 296-155-564 Appendices.

[Statutory Authority: RCW 49.17.010, 49.17.040, 49.17.050, 49.17.440, 49.17.060, and 29 C.F.R. 1926, Subpart CC. WSR 12-01-086, § 296-155-564, filed 12/20/11, effective 2/1/12.]

WAC 296-155-56400 Mobile crane hand signal chart.

[Standard Hand Signals for Controlling Crane Operations]

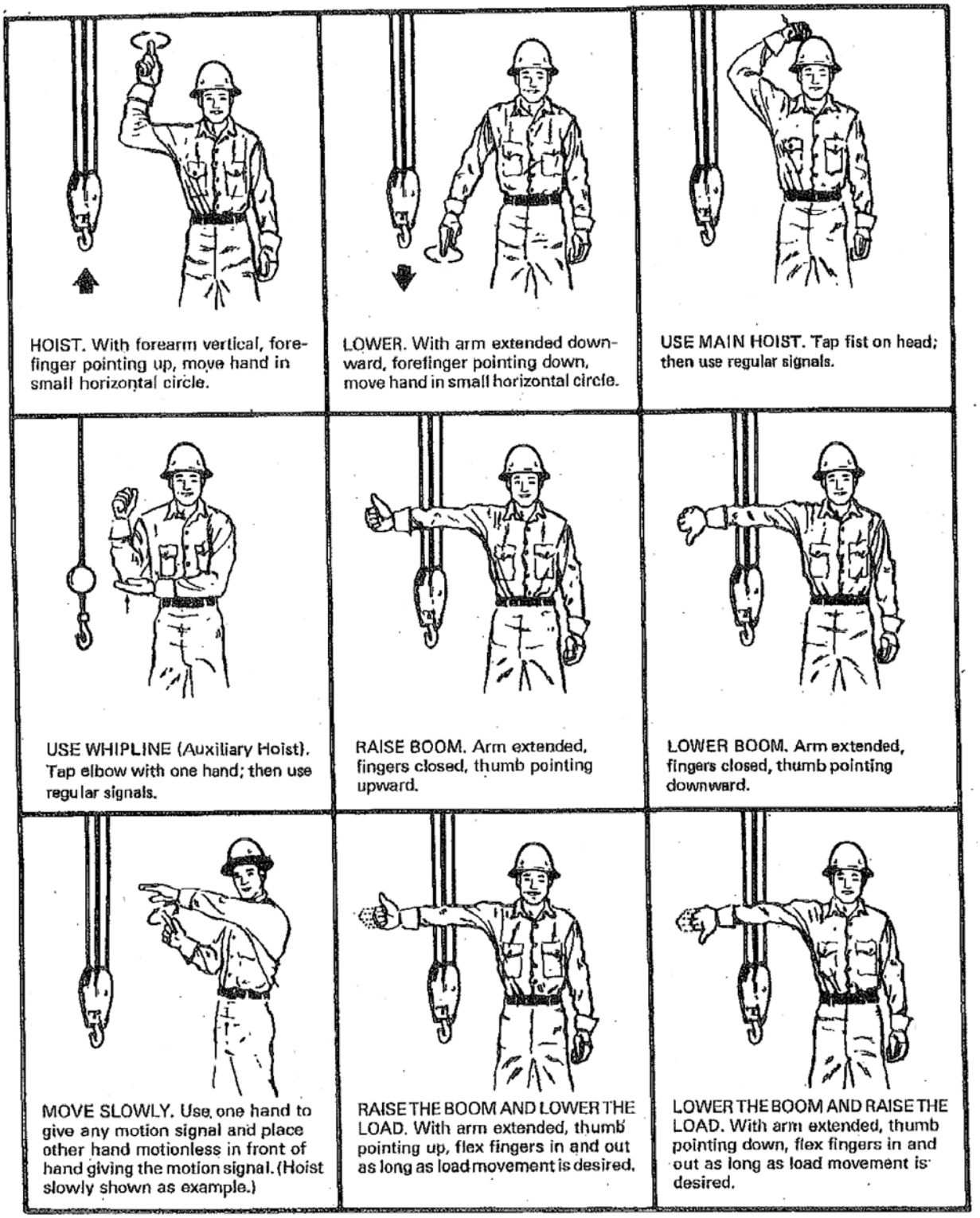

[Standard Hand Signals for Controlling Crane Operations]

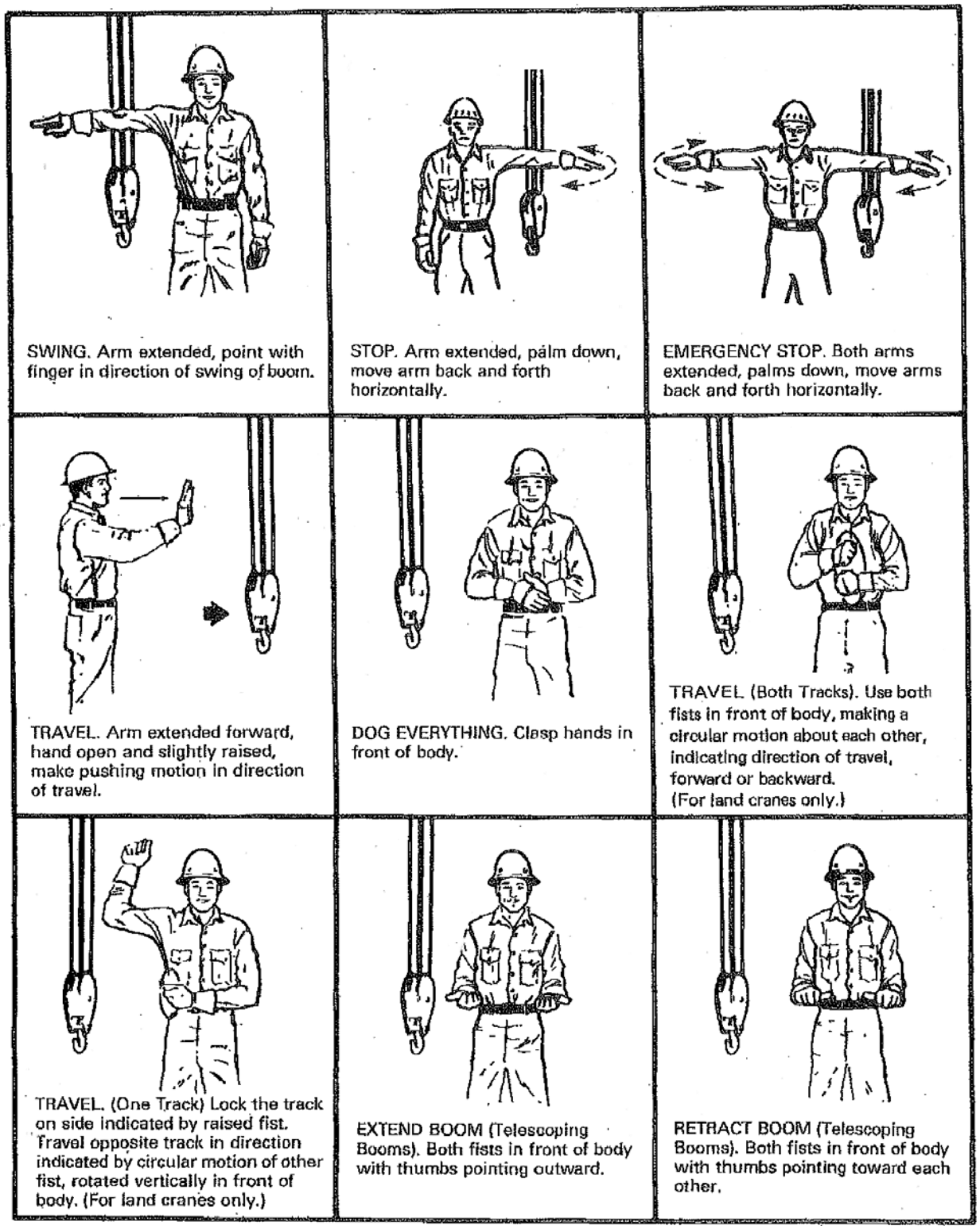

[Standard Hand Signals for Controlling Crane Operations]

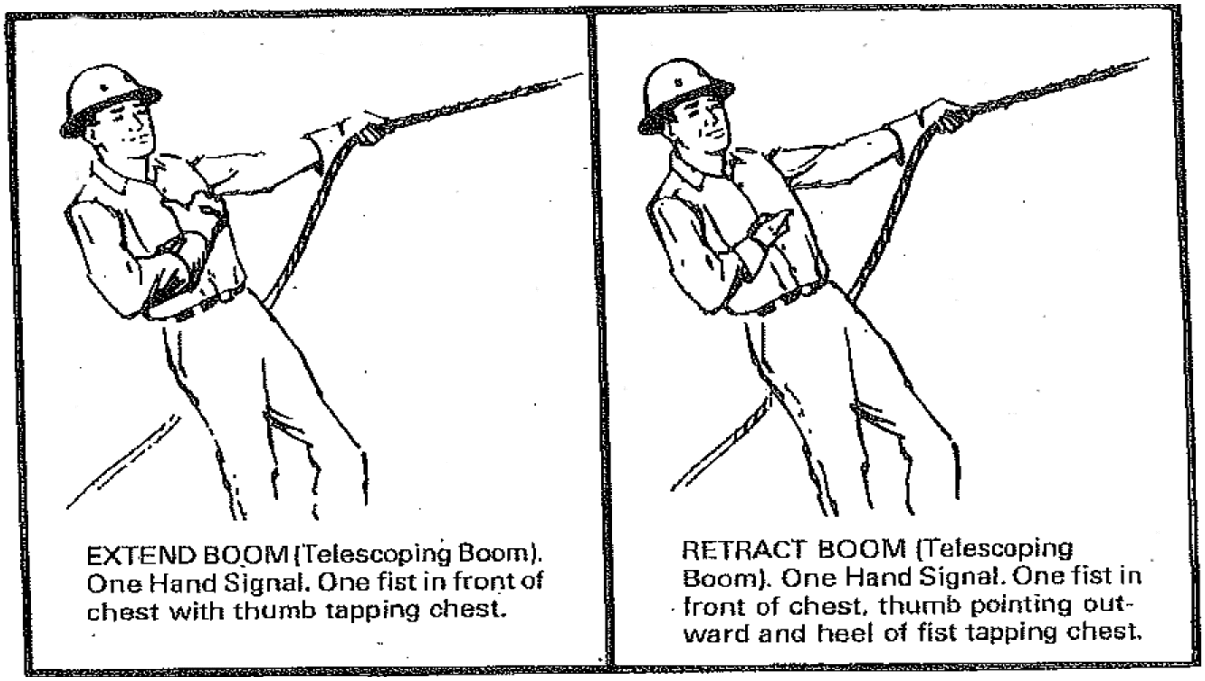

[Statutory Authority: RCW 49.17.010, 49.17.040, 49.17.050, 49.17.060 and chapter 49.17 RCW, and 29 C.F.R. 1926, Subpart CC. WSR 13-02-068, § 296-155-56400, filed 12/31/12, effective 2/1/13. Statutory Authority: RCW 49.17.010, 49.17.040, 49.17.050, 49.17.440, 49.17.060, and 29 C.F.R. 1926, Subpart CC. WSR 12-01-086, § 296-155-56400, filed 12/20/11, effective 2/1/12.]

Reviser's note: RCW 34.05.395 requires the use of underlining and deletion marks to indicate amendments to existing rules, and deems ineffectual changes not filed by the agency in this manner. The bracketed material in the above section does not appear to conform to the statutory requirement.

WAC 296-155-56405 Examples of types of cranes.

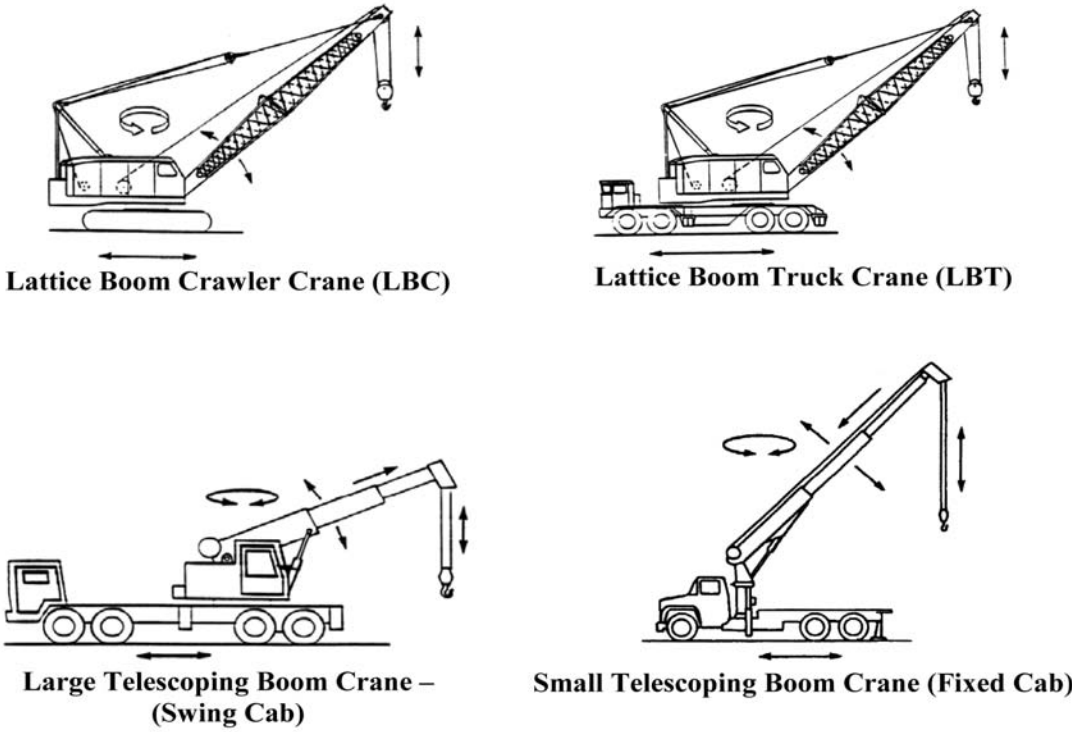

Mobile Crane Types
Figure 41

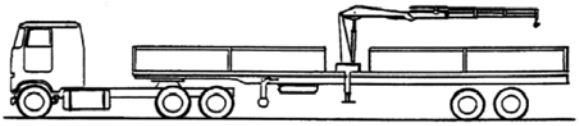

Articulating Boom Crane – Trailer Mounted

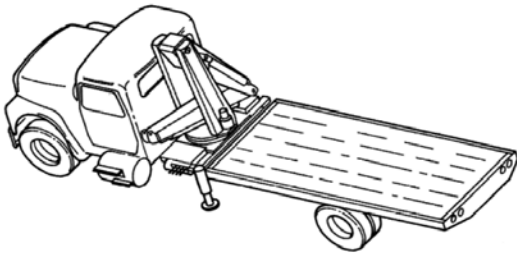

Articulating Boom Crane – Truck Mounted

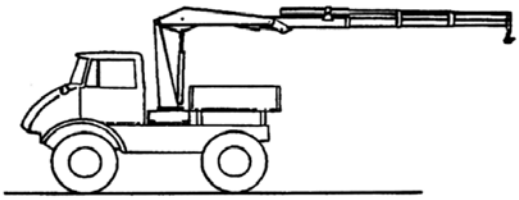

Articulating Boom Crane – Off Road Vehicle

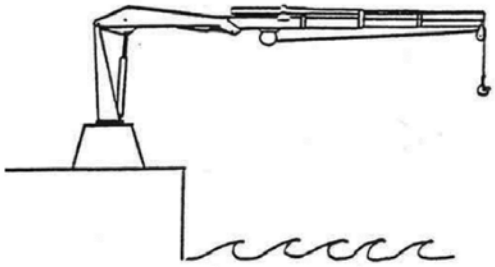

Articulating Crane – Stationary Installation

Articulating Boom Crane Types
Figure 42

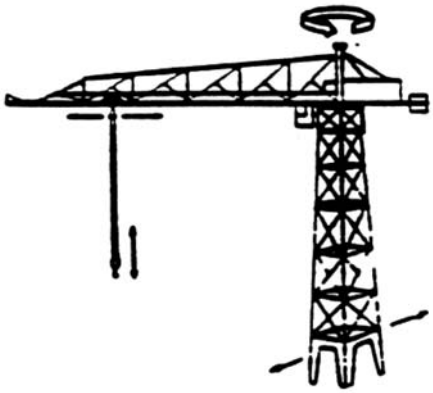

Hammerhead Tower Crane

Luffing Boom Tower Crane

Tower Crane Types
Figure 43

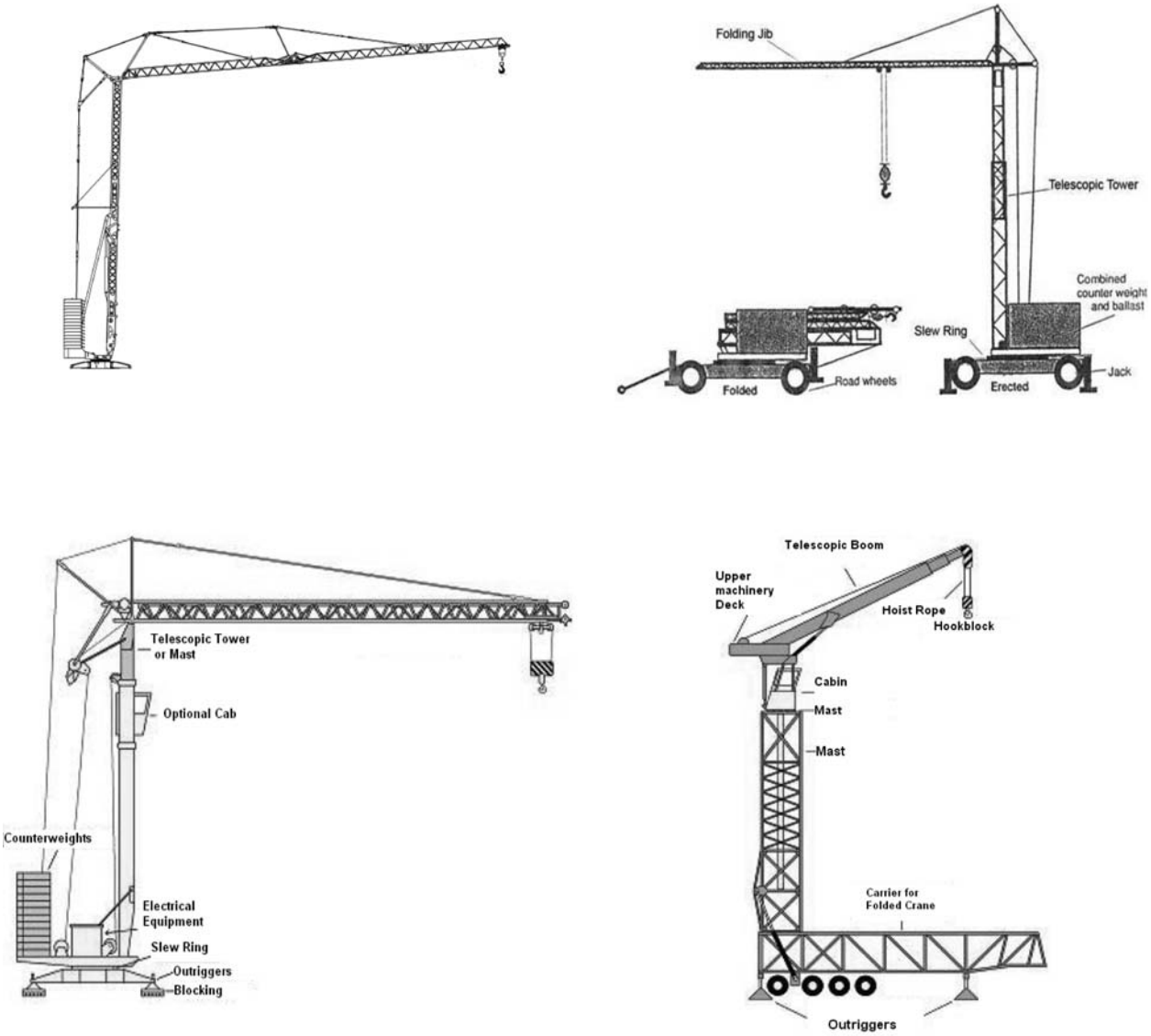

Types of Self-Erecting Tower Cranes
Figure 44

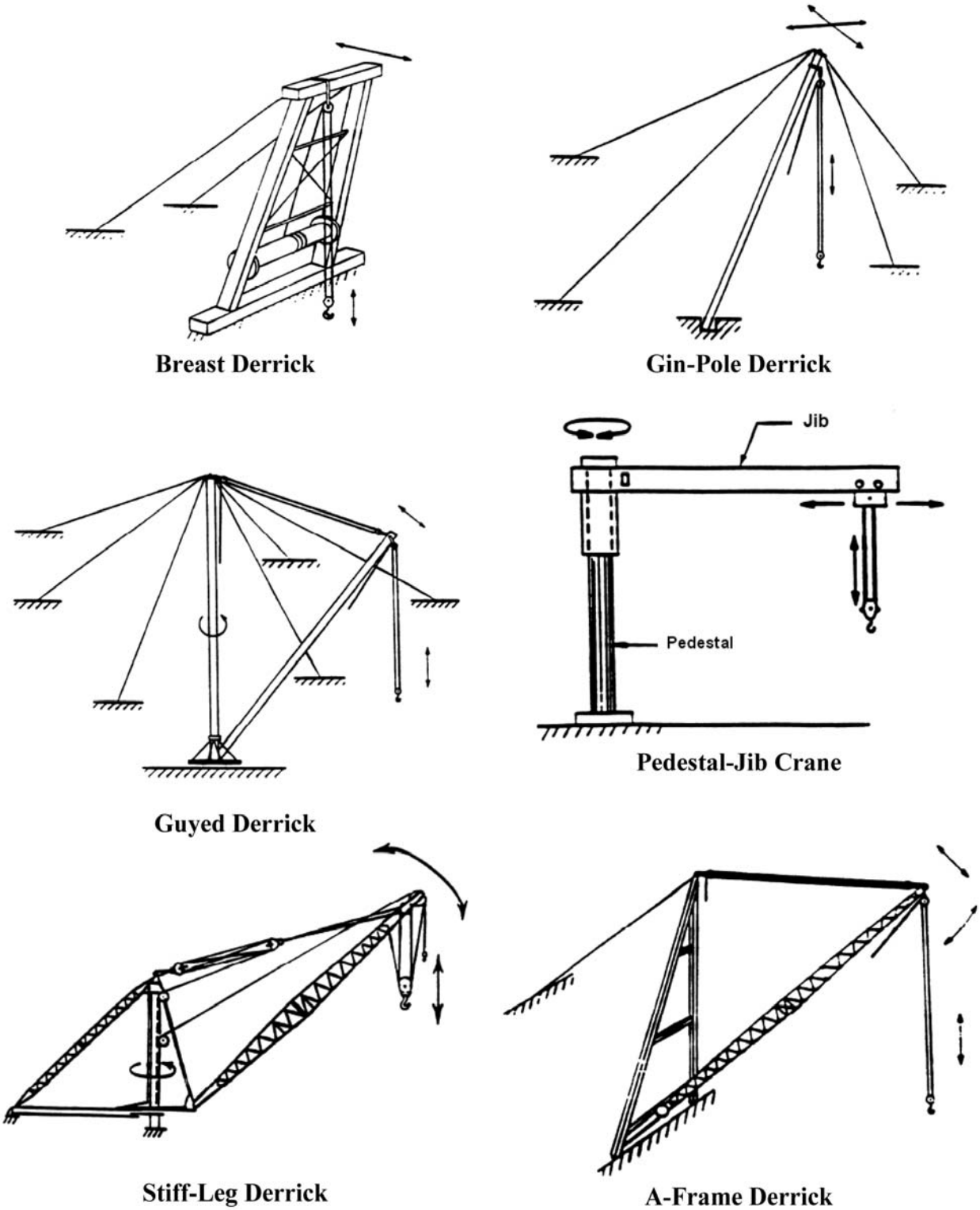

Types of Derricks
Figure 45

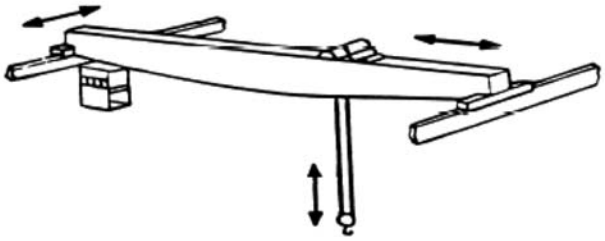

Top Running Bridge/Top Running Trolley

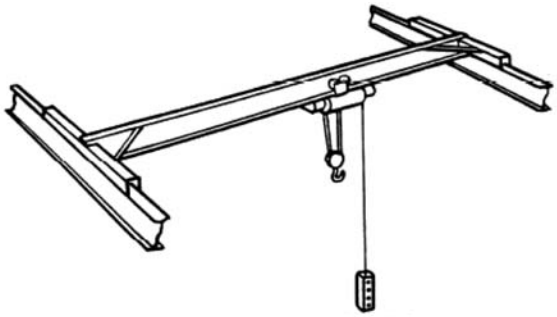

Top Running Bridge/Underhung Trolley

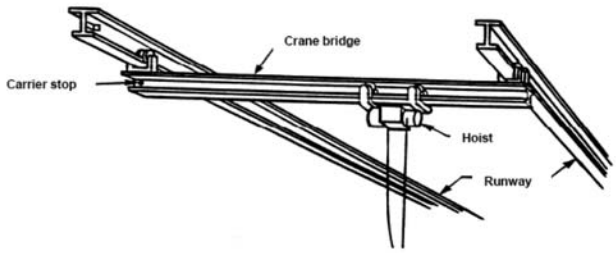

Underhung Bridge/Underhung Trolley

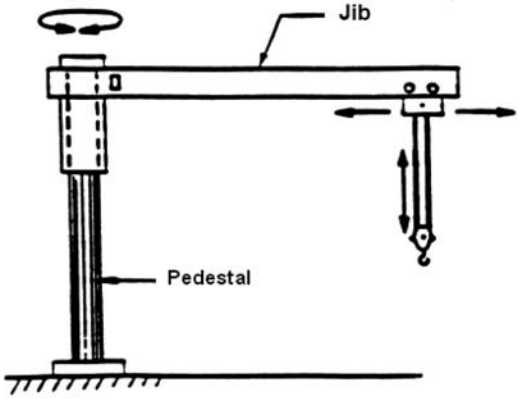

Pedestal-Jib Crane

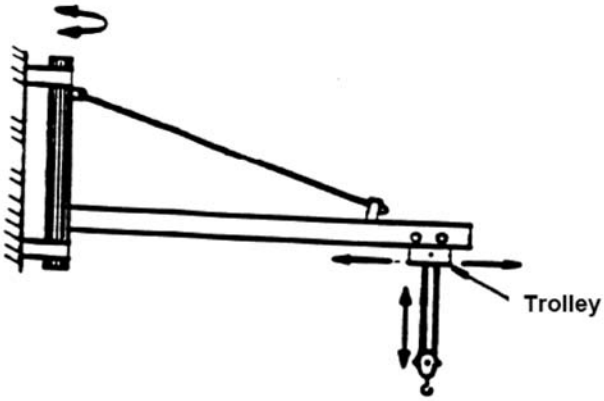

Jib Crane (Wall Mounted)

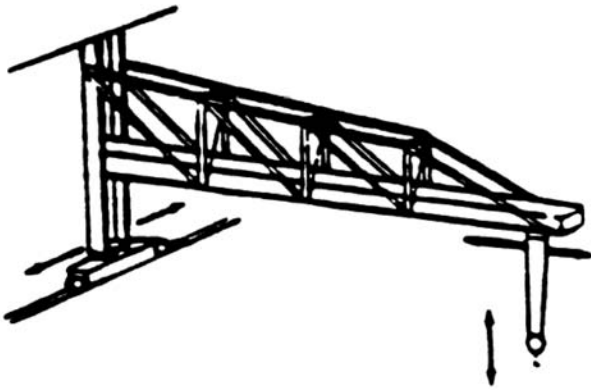

Wall Mounted Bridge Crane

Types of Bridge Cranes
Figure 46

[Statutory Authority: RCW 49.17.010, 49.17.040, 49.17.050, 49.17.440, 49.17.060, and 29 C.F.R. 1926, Subpart CC. WSR 12-01-086, § 296-155-56405, filed 12/20/11, effective 2/1/12.]

WAC 296-155-56410 Personnel platform lift planning and authorization form.

Personnel Platform Lift Planning and Authorization Form

1. Location: _____ Date: _____
2. Purpose of the Lift: _____
   _____
3. Hoisting Equip. Mfg: _____ Model #: ___ Serial: _____
4. Expected Radius: _____ (maximum) _____(at work location)

Personnel Platform Lift Planning and Authorization Form

5. (a) Rated Load at Radius: _____ (b) Maximum Lift Load: _____ [50% of 5(a)]
6. Platform ID: _____ Platform Rating: _____
7. Platform Weight: _____ Type: (Pin On) ____ (Suspended) ____
8. (a) Number of Platform Occupants: _____ (b) Approx. Wt. (With Equip.) _____
9. Total Lift Weight: _____ [7 + 8(b)] [No more than 5(b) above]
10. Personnel Supervisor: _____
11. What are the Alternatives to This Lift? _____
_____
12. Why are they not being used? _____
_____
13. Pre-Lift Briefing Held (Date & Time): _____/ / _____AM/PM____
Attendees: _____
_____
_____
14. Anticipated Hazards (wind, weather, visibility, power lines): _____
_____
15. Lift Accomplished Date: _____ Time: _____
16. Remarks: _____
_____
_____

_____
Employer Signature Date

[Statutory Authority: RCW 49.17.010, 49.17.040, 49.17.050, 49.17.440, 49.17.060, and 29 C.F.R. 1926, Subpart CC. WSR 12-01-086, § 296-155-56410, filed 12/20/11, effective 2/1/12.]

Reviser's note: The brackets and enclosed material in the text of the above section occurred in the copy filed by the agency.

WAC 296-155-56415 Qualifications for operators of below-the-hook lifting devices.

Table 40
Qualifications for Operators of Below-the-Hook Lifting Devices

Type of lifter	Knowledge of:
All lifters	• Any special operations or precautions; • Manufacturer's suggested operating procedures; • Storage requirements of the lifter to protect it from damage.
Structural and mechanical Vacuum Close proximity	• Application of the lifter to the load and adjustments, if any, that adapt the lifter to various sizes or kinds of loads; • Condition of the load, such as but not limited to: ■ Balance; ■ Surface cleanliness; ■ Flatness;
Lifting magnets Remotely operated lifting magnets	■ Bending; ■ Load thickness. • Not exceeding the rated load of the lifting device nor the capacity of the hoisting equipment by the combined weight of the load, lifting device, and rigging; • The proper attachment of adapters to lifting for special load handling.
Vacuum Close proximity lifting magnets	• Charging of battery (if applicable); • The use and understanding of: ■ Meters; ■ Alarms.
Remotely operated lifting magnets	

Type of lifter	Knowledge of:
It is recommended that the operator demonstrates the ability to operate the lifter safely and as outlined above prior to using the lifter.	

[Statutory Authority: RCW 49.17.010, 49.17.040, 49.17.050, 49.17.440, 49.17.060, and 29 C.F.R. 1926, Subpart CC. WSR 12-01-086, § 296-155-56415, filed 12/20/11, effective 2/1/12.]

WAC 296-155-56420 Operator certification—Written examination—Technical knowledge criteria. This appendix contains information for employers, accredited testing organizations, auditors and government entities developing criteria for a written examination to test an individual's technical knowledge relating to the operation of cranes.

(1) General technical information.

(a) The functions and limitations of the crane and attachments.

(b) Wire rope:

(i) Background information necessary to understand the inspection and removal from service criteria in WAC 296-155-53404.

(ii) Capacity and when multiple-part rope is needed.

(iii) Relationship between line pull and safe working load.

(iv) How to determine the manufacturer's recommended rope for the crane.

(c) Rigging devices and their use, such as:

(i) Slings.

(ii) Spreaders.

(iii) Lifting beams.

(iv) Wire rope fittings, such as clips, shackles and wedge sockets.

(v) Saddles (softeners).

(vi) Clamps (beams).

(d) The technical limitations of protective measures against electrical hazards:

(i) Grounding.

(ii) Proximity warning devices.

(iii) Insulated links.

(iv) Boom cages.

(v) Proximity to electric power lines, radii, and microwave structures.

(e) The effects of load share and load transfer in multicrane lifts.

(f) Basic crane terms.

(g) The basics of machine power flow systems.

(i) Mechanical.

(ii) Electrical.

(iii) Pneumatic.

(iv) Hydraulic.

(v) Combination.

(h) The significance of the instruments and gauge readings.

(i) The effects of thermal expansion and contraction in hydraulic cylinders.

(j) Background information necessary to understand the requirements of preoperation and inspection.

(k) How to use the safety devices and operational aids required under WAC 296-155-53410 and 296-155-53412.

(l) The difference between duty-cycle and lifting operations.

(m) How to calculate net capacity for every possible configuration of the equipment using the manufacturer's load chart.

(n) How to use manufacturer-approved attachments and their effect on the equipment.

(o) How to obtain dimensions, weight, and center of gravity of the load.

(p) The effects of dynamic loading from:

(i) Wind.

(ii) Stopping and starting.

(iii) Impact loading.

(iv) Moving with the load.

(q) The effect of side loading.

(r) The principles of backward stability.

(2) Site information.

(a) How to identify the suitability of the supporting ground/surface to support the expected loads of the operation. Elements include:

(i) Weaknesses below the surface (such as voids, tanks, loose fill).

(ii) Weaknesses on the surface (such as retaining walls, slopes, excavations, depressions).

(b) Proper use of mats, blocking/cribbing, outriggers, stabilizers, or crawlers.

(c) Identification of site hazards such as power lines, piping, and traffic.

(d) How to review operation plans with supervisors and other workers (such as the signal person), including how to determine working height, boom length, load radius, and travel clearance.

(e) How to determine if there is adequate room for extension of crawlers or outriggers/stabilizers and counterweights.

(3) Operations.

(a) How to pick, carry, swing and place the load smoothly and safely on rubber tires and on outriggers/stabilizers or crawlers (where applicable).

(b) How to communicate at the site with supervisors, the crew and the signal person.

(c) Proper procedures and methods of reeving wire ropes and methods of reeving multiple-part lines and selecting the proper load block and/or ball.

(d) How to react to changes in conditions that affect the safe operation of the equipment.

(e) How to shut down and secure the equipment properly when leaving it unattended.

(f) Know how to apply the manufacturer's specifications for operating in various weather conditions, and understand how environmental conditions affect the safe operation of the equipment.

(g) How to properly level the equipment.

(h) How to verify the weight of the load and rigging prior to initiating the lift.

(i) How to determine where the load is to be picked up and placed and how to verify the radii.

(j) Know basic rigging procedures.

(k) How to carry out the shift inspection required in this subsection.

(l) Know that the following operations require specific procedures and skill levels:

(i) Multicrane lifts.
(ii) Hoisting personnel.
(iii) Clamshell/dragline operations.
(iv) Pile driving and extracting.
(v) Concrete operations, including poured-in-place and tilt-up.
(vi) Demolition operations.
(vii) Operations on water.
(viii) Magnet operations.
(ix) Multidrum operations.
(m) Know the proper procedures for operating safely under the following conditions:
(i) Traveling with suspended loads.
(ii) Approaching a two-block condition.
(iii) Operating near power lines.
(iv) Hoisting personnel.
(v) Using other than full outrigger/crawler or stabilizer extensions.
(vi) Lifting loads from beneath the surface of the water.
(vii) Using various approved counterweight configurations.
(viii) Handling loads out of the operator's vision (operating in the blind).
(ix) Using electronic communication systems for signal communication.
(n) Know the proper procedures for load control and the use of hand-held tag lines.
(o) Know the emergency response procedure for:
(i) Fires.
(ii) Power line contact.
(iii) Loss of stability.
(iv) Control malfunction.
(v) Two-blocking.
(vi) Overload.
(vii) Carrier or travel malfunction.
(p) Know how to properly use outriggers and stabilizers in accordance with manufacturer specifications.
(4) Use of load charts.
(a) Know the terminology necessary to use load charts.
(b) Know how to ensure that the load chart is the appropriate chart for the equipment in its particular configuration and application.
(c) Know how to use load charts. This includes knowing:
(i) The operational limitations of load charts and footnotes.
(ii) How to relate the chart to the configuration of the crane, crawlers, or outriggers/stabilizers extended or retracted, jib erected or offset, and various counterweight configurations.
(iii) The difference between structural capacity and capacity limited by stability.
(iv) What is included in capacity ratings.
(v) The range diagram and its relationship to the load chart.
(vi) The work area chart and its relationship to the load chart.
(vii) Where to find and how to use the "parts-of-line" information.
(d) Know how to use the load chart together with the load indicators and/or load moment devices.

[Statutory Authority: RCW 49.17.010, 49.17.040, 49.17.050, 49.17.440, 49.17.060, and 29 C.F.R. 1926, Subpart CC. WSR 12-01-086, § 296-155-56420, filed 12/20/11, effective 2/1/12.]

WAC 296-155-56425 Sample declaration form for hours of experience.

DECLARATION OF [enter employee/operator name here]

STATE OF WASHINGTON)
) ss.
COUNTY OF enter county)

I, enter name of operator here, declare as follows:

I am over the age of 18 and competent to testify herein. I make the statements herein based upon personal knowledge.

I declare under penalty of perjury that the following table (on page 2) lists my experience in operating and working with cranes:

The 5 Categories of Cranes and Their Types	Number of Hours of Actual Crane Operating Experience	Number of Hours of Crane Related Experience
(1) **Mobile Cranes**		
(a) Lattice Boom Crawler Cranes (LBC)	300 tons and above ____ Hours	300 tons and above ____ Hours
	Under 300 tons ____ Hours	Under 300 tons ____ Hours
(b) Lattice Boom Truck Cranes (LBT)	300 tons and above ____ Hours	300 tons and above ____ Hours

The 5 Categories of Cranes and Their Types	Number of Hours of Actual Crane Operating Experience	Number of Hours of Crane Related Experience
	Under 300 tons ____ Hours	Under 300 tons ____ Hours
(c) Large Telescopic Boom Cranes (Swing Cab) (TLL) (including digger derricks)	Over 130 tons ____ Hours	Over 130 tons ____ Hours
	Over 40 tons to 130 tons ____ Hours	Over 40 tons to 130 tons ____ Hours
	40 tons and under ____ Hours	40 tons and under ____ Hours
(d) Small Telescopic Boom Cranes (Fixed Cab) (TSS) (including digger derricks)	Over 15 tons ____ Hours	Over 15 tons ____ Hours
	Over 5 tons to 15 tons ____ Hours	Over 5 tons to 15 tons ____ Hours
	5 tons and under ____ Hours	5 tons and under ____ Hours
(2) **Articulating Boom Cranes**	____ Hours	____ Hours
(3) **Tower Cranes**		
(a) Hammerhead	____ Hours	____ Hours
(b) Luffer	____ Hours	____ Hours
(c) Self-Erecting	____ Hours	____ Hours
(4) **Overhead Cranes/Bridge and Gantry**		
(a) Cab Operated	____ Hours	____ Hours
(b) Pendant/Remote	____ Hours	____ Hours
(5) **Derricks** (not including digger derricks)	____ Hours	____ Hours
Hours of actual crane operating experience. For all cranes: Time while the operator is at the controls of the crane; and/or has direct control of that crane; and/or a combination of operating hours within the same crane type. For mobile cranes: It also includes time while installing/removing boom sections, luffing boom, jib, extending and retracting outriggers/stabilizers, leveling crane, and replacing hoisting rope. For tower cranes: It includes time while jumping (increasing the height of the tower/mast). **Note:** Additional actual crane operator experience may account for crane related experience.		
Hours of crane related experience: Time as a signal person/bellman, oiler, crane mechanic, crane inspector, formal classroom training, crane simulator operation, and a combination of operating hours on other categories of cranes.		
I declare under penalty of perjury that the foregoing is true and correct. EXECUTED at City, Washington, this _____ day of month, 2011. _____ Signature of Operator		

[Statutory Authority: RCW 49.17.010, 49.17.040, 49.17.050, 49.17.440, 49.17.060, and 29 C.F.R. 1926, Subpart CC. WSR 12-01-086, § 296-155-56425, filed 12/20/11, effective 2/1/12.]

Reviser's note: The brackets and enclosed material in the text of the above section occurred in the copy filed by the agency.

WAC 296-155-56430 Assembly/disassembly—Working under the boom, jib or other components—Sample procedures for minimizing the risk of unintended dangerous boom movement. (1) WAC 296-155-53402 (7)(a) provides that when pins (or similar devices) are being removed, employees must not be under the boom, jib, or other components, except where the requirements of WAC 296-155-53402 (7)(b) are met. The exception in WAC 296-155-53402 (7)(b) applies when the employer demonstrates that site constraints require one or more employees to be under the boom, jib, or other components when pins (or similar devices) are being removed. In such a situation, the assembly/disassembly supervisor must implement procedures that minimize the risk of unintended dangerous movement and minimize the duration and extent of exposure under the boom.

The following scenario is an example of how the exception applies: A boom cannot be disassembled on the ground because of an aboveground structure (as might be found, for example, at some construction sites) that precludes lowering the boom to the ground. The boom must therefore be disas-

sembled in the air, and the employees who remove the pins must perform that work from an aerial lift whose base is positioned on one side (the near side) of the boom. To gain access to the pins on the far side, the aerial lift basket must move under the boom, since, due to lack of room, the aerial lift cannot be repositioned on the far side. Due to lack of room, the aerial lift cannot be repositioned on the far side, so the aerial basket must move under the boom to gain access to the pins on the far side.

To minimize the risk of unintended dangerous movement while the pins are removed, the assembly/disassembly director uses an assist crane that is rigged to support the boom section that is being detached, using particular care to ensure that the section end that is near the employee(s) removing the pins is well supported. The duration and extent of exposure is minimized by removing the far side pins first, moving the aerial lift basket as soon as possible to the near side so that the employees are no longer under the boom, and then removing the near side pins.

(2) WAC 296-155-53402 (9)(f)(i) provides that, during assembly/disassembly, the center of gravity of the load must be identified if that is necessary for the method used for maintaining stability. WAC 296-155-53402 (9)(f)(ii) states that, where there is insufficient information to accurately identify the center of gravity, measures designed to prevent unintended dangerous movement resulting from an inaccurate identification of the center of gravity must be used.

An example of the application of WAC 296-155-53402 (9)(f)(ii) is as follows. The boom is assembled by lowering boom sections sequentially into place using an assist crane. The assembly/disassembly director's plan is to keep the boom sections stable while they are lowered into place by attaching the assist crane hoist line above the center of gravity of each section. However, in assembling the nonsymmetrical top section of the boom, the assembly/disassembly director is not able to determine where to attach the assist crane hoist line so that it is above the center of gravity. In this situation, before raising the section, all personnel are kept clear of the section and the section is first raised a few inches to determine whether it tips when raised (if it did tip, it would indicate it is not rigged over the center of gravity). If this occurs, the hoist line is repositioned and the procedure repeated (with employees kept clear of the section while it is raised) until the assembly/disassembly director determines that it is rigged over the center of gravity and can be moved into place without dangerous movement.

[Statutory Authority: RCW 49.17.010, 49.17.040, 49.17.050, 49.17.440, 49.17.060, and 29 C.F.R. 1926, Subpart CC. WSR 12-01-086, § 296-155-56430, filed 12/20/11, effective 2/1/12.]

WAC 296-155-56435 Work area chart.

Figure 47
Work Areas

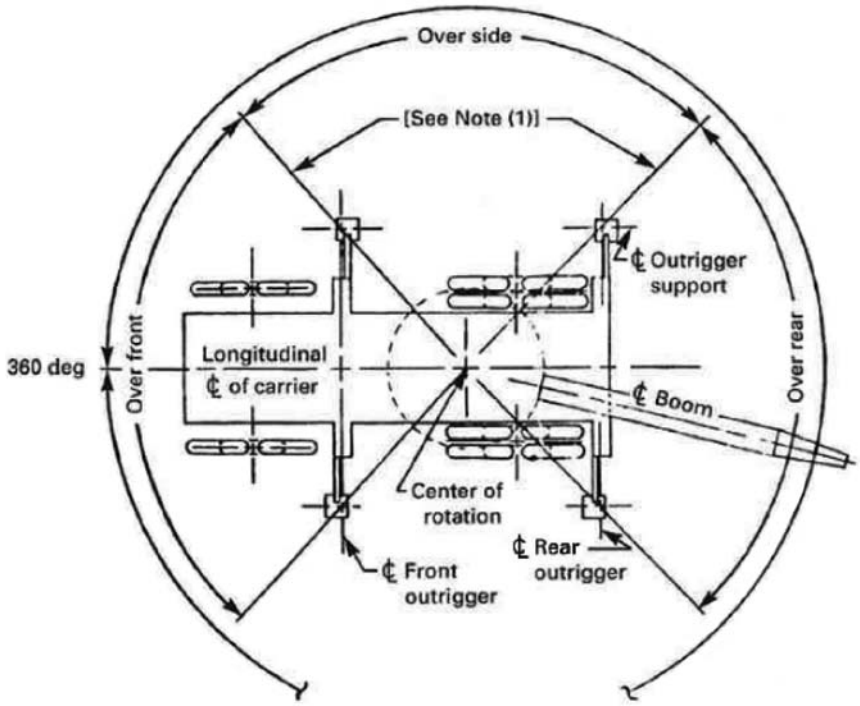

(a) Carrier on Outriggers - Front Outrigger Behind of Front Wheels [Note (2)]

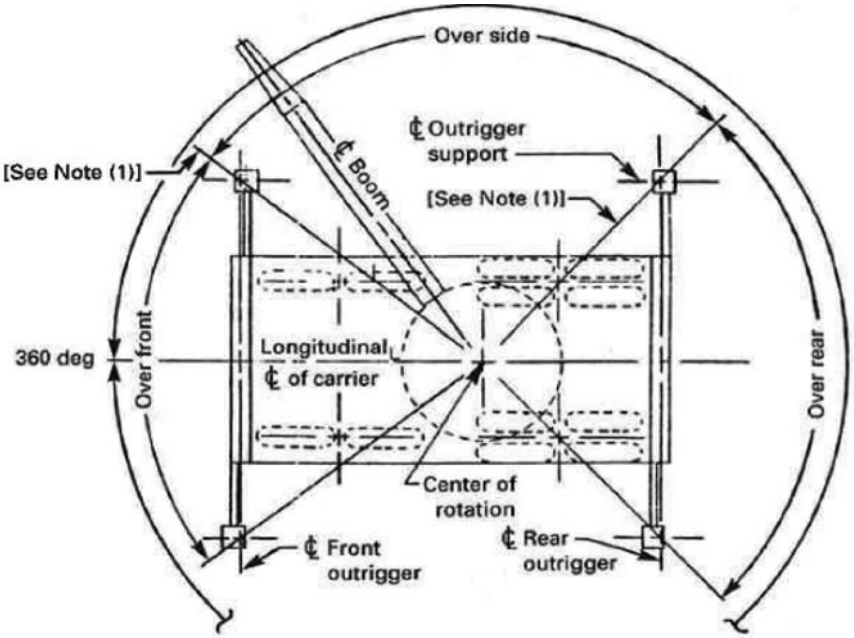

(b) Carrier on Outriggers - Front Outriggers Ahead of Front Wheels [Note (2)]

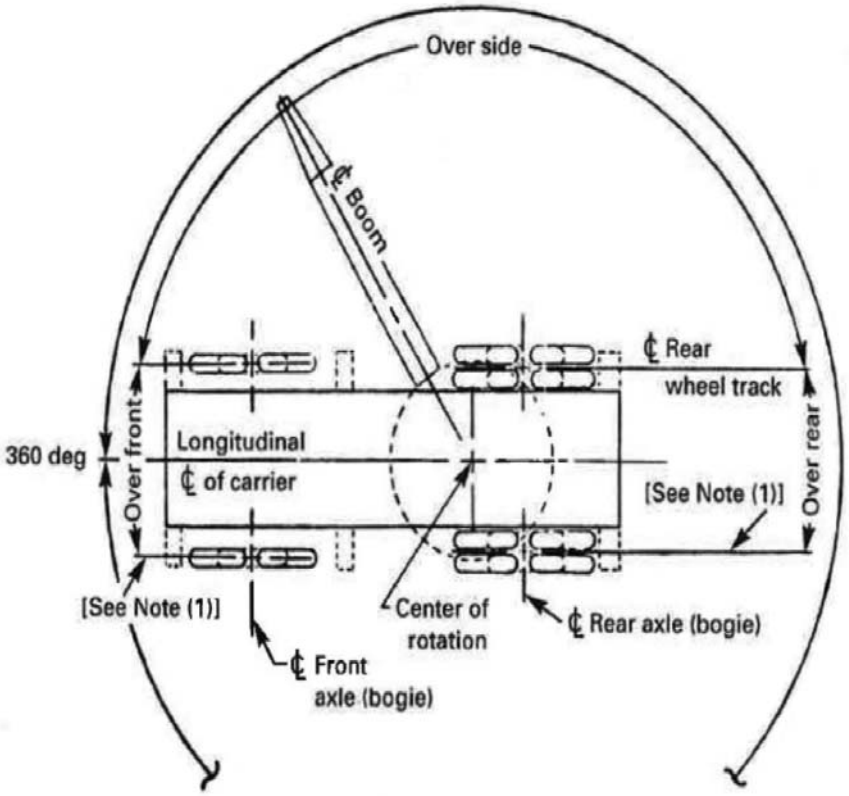

(c) Carrier on Tires [Note (2)]

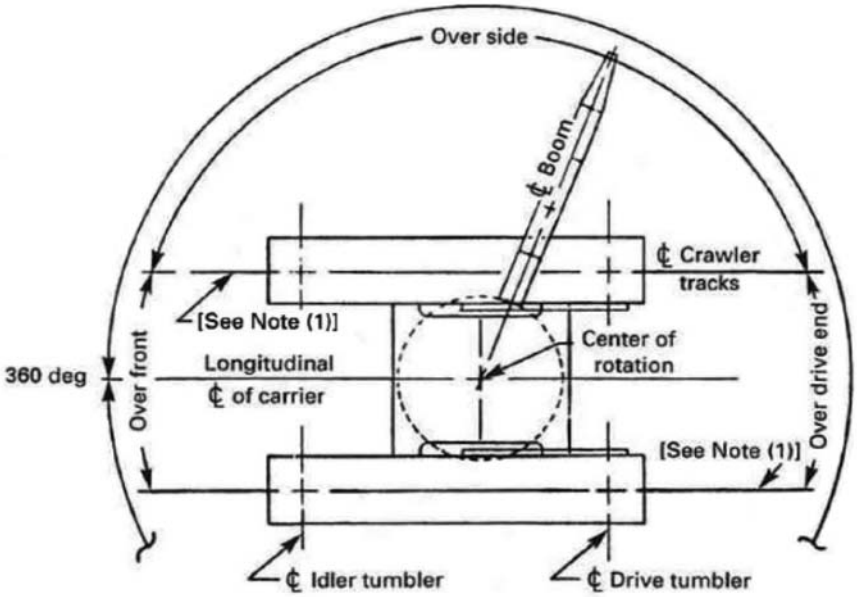

(d) Crawler Type Lower [Note(2)]

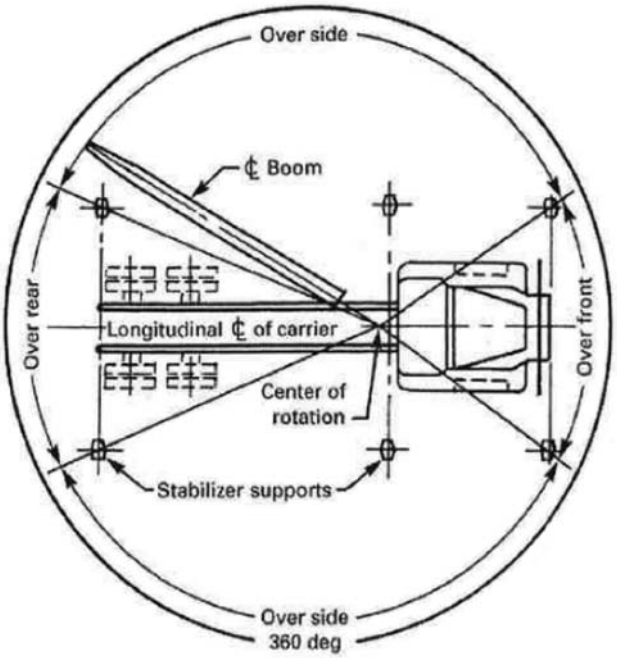

(e) Notes (1) and (2)

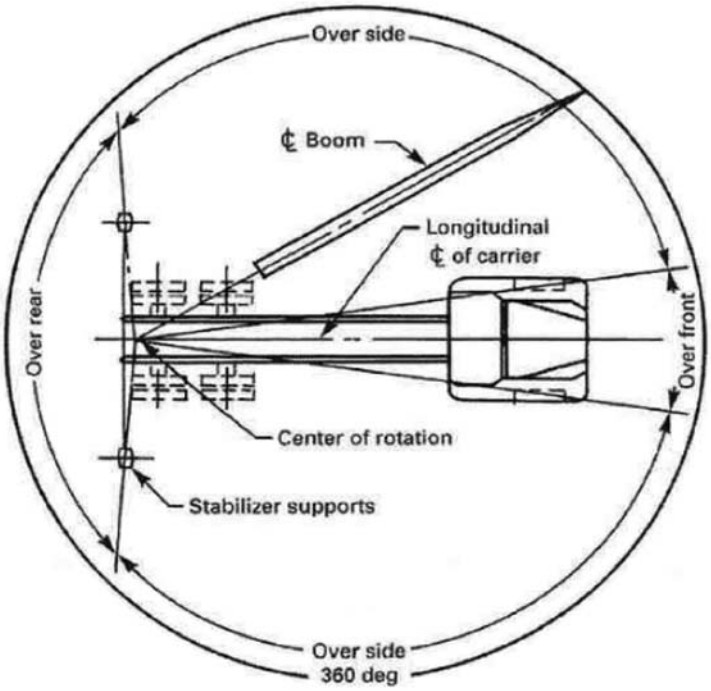

(f) Notes (1) and (2)

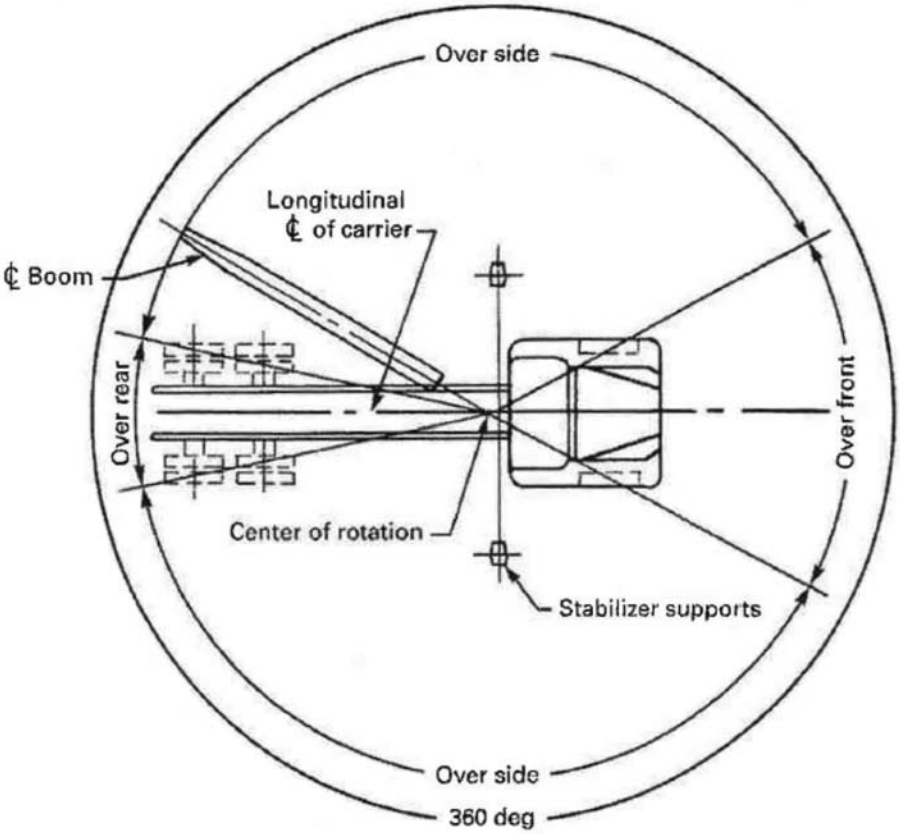

(g) Notes (1) and (2)

Notes: (1) These lines determine the limiting position of any load for operation within the working areas indicated.

(2) Configurations that deviate sufficiently from the work areas shown in these figures must have their working areas defined by appropriate sets of diagrams supplied by the manufacturer or an RPE.

[Statutory Authority: RCW 49.17.010, 49.17.040, 49.17.050, 49.17.440, 49.17.060, and 29 C.F.R. 1926, Subpart CC. WSR 12-01-086, § 296-155-56435, filed 12/20/11, effective 2/1/12.]

Reviser's note: The brackets and enclosed material in the text of the above section occurred in the copy filed by the agency.

PART M

MOTOR VEHICLES, MECHANIZED EQUIPMENT, AND MARINE OPERATIONS

WAC 296-155-600 Definitions applicable to this part. (1) "Apron" means the area along the waterfront edge of the pier or wharf.

(2) "Bearing cap" means:

(a) A slab of reinforced concrete or a heavy timber and plank platform covering the top of a group of piles for the purpose of typing them together and transmitting to them as a group the superimposed load.

(b) A metal plate placed across the top of a steel tube pile to distribute the load from the steel tube to the concrete.

(3) "Bearing pile" means a column of wood, metal or concrete or a combination of two or more of these materials, driven, jacked, or sunk with a water jet, into the earth to transmit and distribute loads to strata below the surface.

(4) "Bulwark" means the side of a ship above the upper deck.

(5) "Caisson pile" means a concrete pile case in an outer casing consisting of a series of telescoping steel tubes, the top section being the largest and usually twenty inches or more in diameter.

(6) "Coaming" means the raised frame, as around a hatchway in the deck, to keep out water.

(7) "Composite pile" means a pile which consists of a concrete pile superimposed on a wood pile.

(8) "Jacob's ladder" means a marine ladder of rope or chain with wooden or metal rungs.

(9)(a) A "pedestal type" concrete pile means a cast-in-place pile with an enlarged (mushroom) base or foot.

(b) A "tapered type" concrete pile means a cast-in-place pile cast in a tapered metal shell.

(10) "Precast concrete pile" means a pile which is cast in a form above ground.

(11) "Driving cap" means a device placed on the top of a pile to prevent its breakage or injury during the driving operation.

(12) "H-pile" means a pile formed of a structural steel column of "H" section.

(13) "Pile driver" means a device or piece of equipment used in driving piles.

(14) "Pretest or jack pile" means a steel cylinder pile driven in section beneath an existing building and filled with concrete.

(15) "Rail," for the purpose of WAC 296-155-630, means a light structure serving as a guard at the outer edge of a ship's deck.

(16) "Sheet piling" means a continuous vertical barricade consisting of squared timbers driven edge to edge, either square edged or tongued and grooved, or of a series of interlocking steel shapes, to form a temporary wall about an excavation, and shored and braced as necessary.

(17) "Steel-tube" means a concrete-filled steel cylinder, consisting of an open or closed-end steel tube or cylinder.

(18) "Wood pile" means a pile which is formed from the trunk of a tree or dimension timbers.

[Order 74-26, § 296-155-600, filed 5/7/74, effective 6/6/74.]

WAC 296-155-605 Equipment. (1) General requirements.

(a) All equipment left unattended at night, adjacent to a highway in normal use, or adjacent to construction areas where work is in progress, shall have appropriate lights or reflectors, or barricades equipped with appropriate lights or reflectors, to identify the location of the equipment.

(b) All tire servicing of multipiece and single-piece rim wheels are subject to the requirements of chapter 296-864 WAC.

(c)(i) Heavy machinery, equipment, or parts thereof, which are suspended or held aloft by use of slings, hoists, or jacks shall be substantially blocked or cribbed to prevent falling or shifting before employees are permitted to work under or between them. Bulldozer and scraper blades, end-loader buckets, dump bodies, and similar equipment, shall be either fully lowered or blocked when being repaired or when not in use. All controls shall be in a neutral position, with the motors stopped and brakes set, unless work being performed required otherwise.

(ii) Whenever the equipment is parked, the parking brake shall be set. Equipment parked on inclines shall have the wheels chocked and the parking brake set.

(d) The use, care and charging of all batteries shall conform to the requirements of part I of this chapter.

(e) All cab glass shall be safety glass, or equivalent, that introduces no visible distortion affecting the safe operation of any machine covered by this part.

(f) All equipment covered by this part shall comply with the requirements of WAC 296-155-428 (1)(e) when working or being moved in the vicinity of power lines or energized transmitters.

(g) Where traffic is diverted onto dusty surfaces, good visibility shall be maintained by the suppression of dust, through the periodic application of oil or water to the grade surface, as required.

(h) No equipment, vehicle, tool, or individual shall operate within 10 feet of any power line or electrical distribution equipment except in conformity with the requirements of WAC 296-155-77100 (1)(h).

(2) Specific requirements. (Reserved.)

[Statutory Authority: RCW 49.17.010, 49.17.040, 49.17.050, 49.17.440, 49.17.060, and 29 C.F.R. 1926, Subpart CC. WSR 12-01-086, § 296-155-605, filed 12/20/11, effective 2/1/12. Statutory Authority: RCW 49.17.010, 49.17.040, 49.17.050, 49.17.060. WSR 07-03-163, § 296-155-605, filed 1/24/07, effective 4/1/07; WSR 98-05-046, § 296-155-605, filed 2/13/98, effective 4/15/98. Statutory Authority: RCW 49.17.040 and 49.17.050. WSR 86-03-074 (Order 86-14), § 296-155-605, filed 1/21/86; Order 74-26, § 296-155-605, filed 5/7/74, effective 6/6/74.]

WAC 296-155-610 Motor vehicles on construction sites. (1) Scope. Motor vehicles covered by this section include any vehicles that operate on a construction site. The requirements of this section do not apply to the equipment regulated by WAC 296-155-615, Material handling equipment.

(2) General requirements for motor vehicles.

(a) Braking systems.

• All vehicles must have:

– A service brake system;

– An emergency brake system;

AND

– A parking brake system.

• These systems must be maintained in operable condition.

• These systems may use common components.

(b) Before leaving a motor vehicle unattended:

(i) The motor must be stopped.

(ii) The parking brake must be engaged and the wheels turned into curb or berm when parked on an incline.

(iii) If parking on an incline and there is no curb or berm, the wheels must be chocked or otherwise secured.

(c) Lighting systems. All vehicles, or combination of vehicles, must have brake lights in operable condition, regardless of light conditions.

• Employers must meet the requirements in Table 1 below.

Table 1

If:	Then:
Visibility conditions warrant additional light.	All vehicles, or combinations of vehicles, in use must be equipped with: • At least two headlights in operable condition; **AND** • At least two taillights in operable condition.

(d) All vehicles must be equipped with an operable audible warning device (horn) at the operator's station.

(e) Operating vehicles, other than passenger cars and pickups, with an obstructed view to the rear. Employers must prohibit the use of any motor vehicle equipment that has an obstructed view to the rear unless the vehicle meets one of the following:

• Has an operable automatic reverse signal alarm audible above the surrounding noise level and audible no less than fifteen feet from the rear of the vehicle;

OR

• Is backed up when an observer signals that it is safe to do so.

Reference: For requirements on operating dump trucks in reverse, see (f) of this subsection, Operating dump trucks in reverse.

Note: • If the surrounding noise level is so loud that reverse signal alarms are not effective, then an observer must be used.

• An observer can be any individual at the construction site, except a person performing the duties of a flagger. The observer must:

– Be in the direct line-of-sight or able to communicate with the driver.

– Be able to see the entire backing zone.

– Continue to provide direction to the driver until:

■ The driver reaches the destination and stops;

OR

■ There are no longer employees in the backing zone and it is reasonable to expect that no employee(s) will enter the backing zone.

(f) Operating dump trucks in reverse.

(i) You must make sure the dump truck has an operable automatic reverse signal alarm:

• Audible above the surrounding noise level;

AND

• Audible no less than fifteen feet from the rear of the vehicle.

(ii) Before backing a dump truck the driver must determine that no one is currently in the backing zone and it is reasonable to expect that no employee(s) will enter the backing zone while operating the dump truck in reverse.

If employee(s) are in the backing zone or it is reasonable to expect that an employee(s) will enter the backing zone, you must make sure the truck is backed up only when:

• An observer signals that it is safe to back;

OR

• An operable mechanical device that provides the driver a full view behind the dump truck is used, such as a video camera.

Note: The following diagram defines the backing zone. Distances are reported in feet.

DUMP TRUCK BACKING

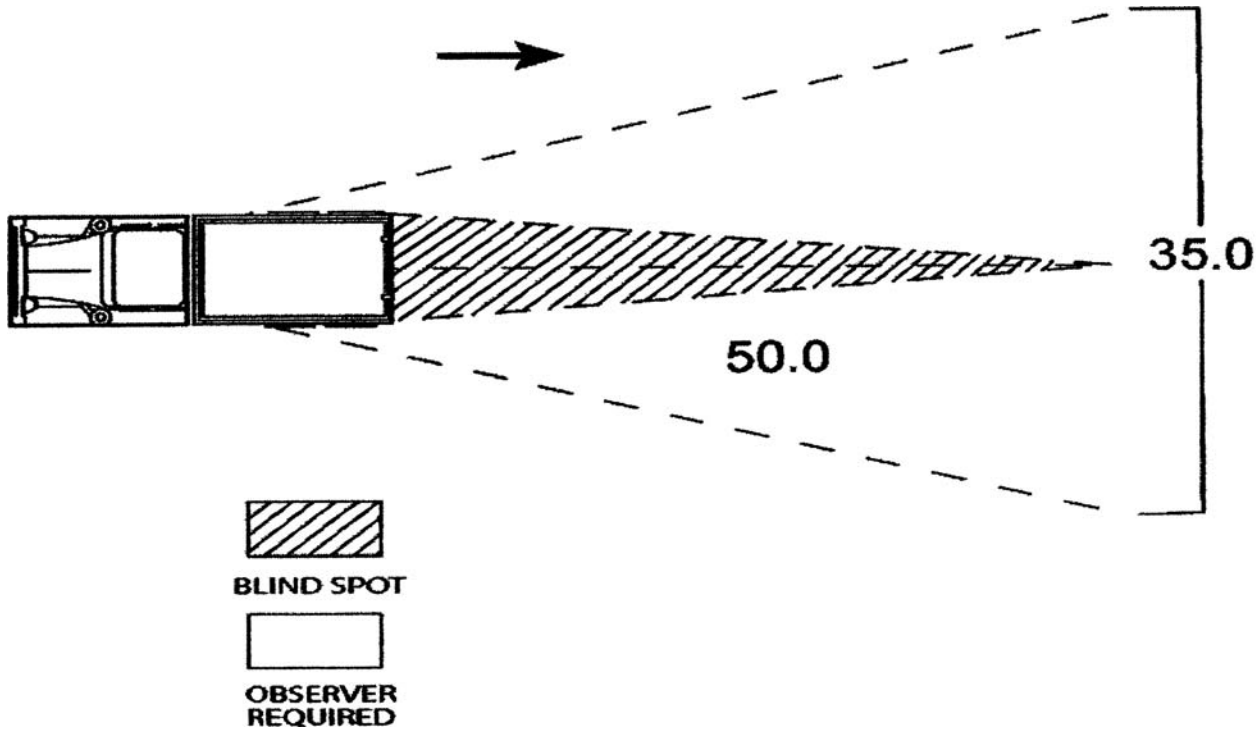

Exemption: • Employees are considered protected when they are on the opposite side of a fixed barrier such as:
– A jersey barrier;
– Heavy equipment (such as a paving machine);
OR
– A six-inch concrete curb.

Note: The term **"dump trucks"** includes both belly and rear dump trucks with a minimum payload of four yards.

(g) Windshields.

• All vehicles with cabs must be equipped with:

– Windshields;

– Powered wipers; and

– Rear view mirrors.

• Cracked and broken glass must be replaced.

• Vehicles operating in areas or under conditions that cause fogging or frosting of the windshields must be equipped with operable defogging or defrosting devices.

(h) Haulage vehicles. Employers must meet the requirement in Table 2 below.

Table 2

If:	Then:
Any haulage vehicles payload is filled by: • Cranes; • Power shovels; • Loaders; **OR** • Similar equipment.	You must have a cab shield and/or canopy adequate to protect the operator from shifting or falling materials.

(i) Securing material and employees.

• Tools and material must be secured to prevent movement when transported in the same compartment as employees.

• Vehicles used to transport employees must have seats firmly secured and adequate for the number of employees to be carried.

• Seat belts and anchorages meeting the requirements of 49 C.F.R. Part 571 (Department of Transportation, Federal Motor Vehicle Safety Standards) must be installed in all motor vehicles and used by all occupants of the vehicle.

(j) Trucks with dump bodies.

• Trucks with dump bodies or raisable platforms, beds, or boxes must be equipped with positive means of support, permanently attached. This positive means of support must be capable of being locked in position to prevent accidental lowering of the body while maintenance or inspection work is being done.

• Operating levers, controlling hoisting or dumping devices on haulage bodies, must be equipped with a latch or other device, such as a detent switch, which will prevent accidental starting or tripping of the mechanism.

• Trip handles for tailgates of dump trucks must be so arranged that, in dumping, the operator will be in the clear.

(k) Fenders on motor vehicle equipment.

• All rubber-tired motor vehicle equipment must be equipped with fenders.

• Mud flaps may be used in lieu of fenders whenever motor vehicle equipment is not designed for fenders.

(l) Vehicle safety inspections.

• All vehicles in use must be checked at the beginning of each shift to make sure that the following parts, equipment, and accessories are in safe operating condition and free of apparent damage that could cause failure while in use:

– Service brakes (including trailer brake connections);
– Parking system (hand brake);
– Emergency stopping system (brakes);
– Tires;
– Horn;
– Steering mechanism;
– Coupling devices;
– Seat belts;
– Operating controls;

AND

– Safety devices.

• These requirements also apply where such equipment is necessary.

– Lights;
– Reflectors;
– Windshield wipers;
– Defrosters;
– Fire extinguishers;
– Steps and handholds for vehicle access;

AND

– Any other necessary equipment.

• All defects must be corrected before the vehicle is placed in service.

[Statutory Authority: RCW 49.17.010, 49.17.040, 49.17.050, 49.17.060. WSR 04-24-089, § 296-155-610, filed 12/1/04, effective 1/1/05. Statutory Authority: RCW 49.17.040 and 49.17.050. WSR 86-03-074 (Order 86-14), § 296-155-610, filed 1/21/86; Order 74-26, § 296-155-610, filed 5/7/74, effective 6/6/74.]

WAC 296-155-615 Material handling equipment. (1) General requirements for earthmoving equipment.

(a) Scope.

These rules apply to the earthmoving equipment. Some examples of earthmoving equipment are:

• Scrapers;
• Loaders;
• Crawler or wheel tractors;
• Bulldozers;
• Off-highway trucks;
• Graders;
• Agricultural and industrial tractors;

AND

• Similar equipment.

(b) Seat belts.

• Seat belts must be provided and used by all operators and passengers on all equipment covered by this section.

• Seat belts must meet the requirements of the Society of Automotive Engineers, J386-1969, Seat Belts for Construction Equipment.

• Seat belts for agricultural and light industrial tractors must meet the seat belt requirements of Society of Automotive Engineers J333a-1970, Operator Protection for Agricultural and Light Industrial Tractors.

Exemption: Seat belts are not required for equipment designed only for standup operation.

• Seat belts must not be used on equipment that does not have rollover protective structure (ROPS) or adequate canopy protection in place.

Exemption: Mechanics and persons in training may ride on the equipment without a seatbelt if one is not provided.

(c) Access roadways and grades.

• Equipment must not be operated on access roadway or grades unless they are constructed and/or maintained to allow for the safe operation of the equipment.

• Every emergency access ramp and berm used by an employer must be constructed to restrain and control runaway vehicles.

(d) Brakes.

Earthmoving equipment must have brakes capable of stopping and holding the equipment fully loaded.

• Equipment mentioned in (a) of this subsection, General requirements for earthmoving equipment, must have brakes meeting the specifications in Society of Automotive Engineers SAE-J237, Loader Dozer-1971, J236, Graders-1971, and J319b, Scrapers-1971.

• Brake systems for self-propelled rubber-tired off-highway equipment manufactured after January 1, 1972, must meet the applicable minimum performance criteria set forth in the following Society of Automotive Engineers Recommended Practices:

Self-propelled scrapers	SAE J319b-1971
Self-propelled graders	SAE J236-1971
Truck and wagons	SAE J166-1971
Front-end loaders and dozers	SAE J237-1971

(e) Fenders.

• If pneumatic-tired earthmoving haulage equipment has a maximum speed that exceeds fifteen miles per hour, then the equipment must be equipped with fenders on all wheels to meet the requirements of Society of Automotive Engineers SAE J321a-1970, Fenders for Pneumatic-Tired Earthmoving Haulage Equipment.

• An employer may, at any time, seek to show under WAC 296-155-010, Variance and procedure, that the uncovered wheels present no hazard to personnel from flying materials.

Note: Examples of pneumatic-tired earthmoving haulage equipment may include:

• Trucks;
• Scrapers;
• Tractors;

AND

• Trailing units.

(f) Rollover protective structures (ROPS).

For requirements pertaining to rollover protective structures and overhead protection, see WAC 296-155-950 through 296-155-965.

(g) Audible alarms.

• All bidirectional machines must be equipped with a horn, distinguishable from the surrounding noise level. This horn must be:

– Operated as needed when the machine is moving in either direction;

AND

– Maintained in an operative condition.

Note: Examples of bidirectional machines include:

- Rollers;
- Compactors;
- Front-end loaders;
- Bulldozers;

AND

- Similar equipment.

• Employers must make sure that earthmoving or compacting equipment with an obstructed view to the rear in reverse is not operated unless:

– A reverse signal alarm distinguishable from the surrounding noise level is used;

OR

– An observer signals that it is safe to back up.

• If the surrounding noise level is of such amplitude that reverse signal alarms are not effective, then amber strobe lights must be used.

(h) Operators must look in the direction of travel.

The driver must look in the direction of, and keep a clear view of the path of travel, when operating equipment in reverse.

Exemption: See (g)(ii) of this subsection, Audible alarms, for requirements pertaining to equipment that has an obstructed view to the rear.

(i) Scissor points.

Scissor points on all front-end loaders, which constitute a hazard to the operator during normal operation, must be guarded.

(j) Tractors.

• Tractor motors must be cranked only by operators or other experienced persons.

• Waterproof and comfortable seat cushions must be provided on tractors at all times when working.

• Operator must not leave controls of tractor with master clutch engaged.

(k) Winch lines.

Winch lines must be maintained in good condition and provided with spliced eye, knob or hook in working end, except under conditions where unspliced end is required.

(l) Bulldozers and carry-all gates.

• Repairs on blade or dozer equipment must not be initiated unless the motor has been stopped and dozer blade is resting on the ground or securely blocked. The same applies to carry-all gates.

• Bulldozer blades and carry-all gates must rest on the ground or on blocking when machines are not in operation.

(m) Moving equipment.

Personnel must not get on or off machine while machine is in motion.

(n) Hazardous conditions.

Where excessive dust conditions are created, such areas must be sprinkled with water or an environmentally safe solution to keep dust at a minimum.

Reference: When dust presents a hazard, see chapter 296-841 WAC, Respiratory hazards for additional requirements.

(2) Excavating and other equipment.

(a) Tractors covered in subsection (1) of this section must have seat belts as required for the operators when seated in the normal seating arrangement for tractor operation.

(b) For the purposes of this part and of Part L of this chapter, the names and descriptions for measurement of dimensions of machinery and attachments must be as described in Society of Automotive Engineers 1970 Handbook, pages 1088 through 1103.

(c) The safety requirements, ratios, or limitations applicable to machines or attachment usage covered in Power Crane and Shovel Association's Standards No. 1 and No. 2 of 1968, and No. 3 of 1969, must be complied with, and must apply to cranes, machines, and attachments under this part.

(3) Lifting and hauling equipment (other than equipment covered under Part L of this chapter). Industrial trucks (including forklifts) shall meet the requirements of chapter 296-863 WAC, WAC 296-155-605 and the following:

(a) Lift trucks, stackers, etc., shall have the rated capacity clearly posted on the vehicle so as to be clearly visible to the operator. When auxiliary removable counter-weights are provided by the manufacturer, corresponding alternate rated capacities also shall be clearly shown on the vehicle. These ratings shall not be exceeded.

(b) No modifications or additions which affect the capacity or safe operation of the equipment shall be made without the manufacturer's or professional engineer's written approval. If such modifications or changes are made, the capacity, operation, and maintenance instruction plates, tags, or decals, shall be changed accordingly. In no case shall the original safety factor of the equipment be reduced.

(c) If a load is lifted by two or more trucks working in unison, the proportion of the total load carried by any one truck shall not exceed its capacity.

(d) Steering or spinner knobs shall not be attached to the steering wheel unless the steering mechanism is of a type that prevents road reactions from causing the steering handwheel to spin. The steering knob shall be mounted within the periphery of the wheel.

(e) All high lift rider industrial trucks shall be equipped with overhead guards which meet the configuration and structural requirements as defined in paragraph 502 of American National Standards Institute B56.1-1975, Safety Standards for Powered Industrial Trucks.

(f) All industrial trucks in use shall meet the applicable requirements of design, construction, stability, inspection, testing, maintenance, and operation, as defined in American National Standards Institute B56.1-1975, Safety Standards for Powered Industrial Trucks.

(g) Unauthorized personnel shall not be permitted to ride on powered industrial trucks. A safe place to ride shall be provided where riding of trucks is authorized.

(h) When a forklift truck is used for elevating workers a platform shall be specifically built for that purpose and shall comply with the following requirements:

(i) The platform shall be securely attached to the forks and shall have standard guardrails and toeboards on all open sides.

(ii) The hydraulic system of the forklift shall be so designed that the lift mechanism will not drop faster than one hundred thirty-five feet per minute in the event of a failure in

any part of the system. Forklifts used for elevating platforms shall be identified that they are so designed.

(iii) A safety strap shall be installed or the control lever shall be locked to prevent the boom from tilting.

(iv) An operator shall be at the controls of the forklift equipment while persons are on the platform.

(v) The operator shall be in the normal operating position while raising or lowering the platform.

(vi) The vehicle shall not travel from point to point while workers are on the platform except that inching or maneuvering at very slow speed is permissible.

(vii) The area between workers on the platform and the mast shall be adequately guarded to prevent contact with chains or other shear points.

(viii) All platforms shall be visually inspected daily or before each use by the person in charge of the work being performed, and shall be tested as frequently as is necessary to maintain minimum safety factors.

(ix) Whenever a truck, except for high lift order picker trucks, is equipped with vertical hoisting controls elevatable with the lifting carriage or forks, the following precautions shall be taken for the protection of personnel being elevated.

(A) Provide a platform secured to the lifting carriage and/or forks.

(B) Provide means whereby personnel on the platform can shut off power to the truck.

(C) Provide such protection from falling objects as indicated necessary by the operating conditions.

[Statutory Authority: RCW 49.17.010, 49.17.040, 49.17.050, 49.17.060. WSR 07-03-163, § 296-155-615, filed 1/24/07, effective 4/1/07; WSR 04-24-089, § 296-155-615, filed 12/1/04, effective 1/1/05. Statutory Authority: RCW 49.17.010, [49.17].040 and [49.17].050. WSR 00-01-176, § 296-155-615, filed 12/21/99, effective 3/1/00. Statutory Authority: RCW 49.17.010, [49.17].040, [49.17].050 and [49.17].060. WSR 98-05-046, § 296-155-615, filed 2/13/98, effective 4/15/98. Statutory Authority: Chapter 49.17 RCW. WSR 94-15-096 (Order 94-07), § 296-155-615, filed 7/20/94, effective 9/20/94. Statutory Authority: RCW 49.17.040 and 49.17.050. WSR 86-03-074 (Order 86-14), § 296-155-615, filed 1/21/86; Order 74-26, § 296-155-615, filed 5/7/74, effective 6/6/74.]

WAC 296-155-620 Pile driving equipment. (1) General requirements.

(a) Boilers and piping systems which are a part of, or used with, pile driving equipment shall meet the applicable requirements of the American Society of Mechanical Engineers, Powers Boilers (section I).

(b) All pressure vessels which are a part of or used with, pile driving equipment shall meet the applicable requirements of the American Society of Mechanical Engineers, Pressure Vessels (section VIII).

(c) Overhead protection, which will not obscure the vision of the operator, and which meets the requirements of Part L of this chapter, shall be provided. Protection shall be of 2-inch planking or other solid material of equivalent strength.

(d) Stop blocks shall be provided for the leads to prevent the hammer from being raised against the head block.

(e) A blocking device, capable of safely supporting the weight of the hammer shall be provided for placement in the leads under the hammer at all times while employees are working under the hammer.

(f) Guards shall be provided across the top of the head block to prevent the cable from jumping out of the sheaves.

(g) When the leads must be inclined in the driving of batter piles, provisions shall be made to stabilize the leads.

(h) All working equipment shall be visually inspected at the beginning of each shift.

(i) Fixed leads shall be provided with ladder, and adequate rings, or similar attachment points, so that the loft workers may engage their full body harness lanyard to the leads. If the leads are provided with loft platform(s) such platform(s) shall be protected by standard guardrails.

(j) Pile drivers with swinging leads shall have a wire rope safety strap on top end.

(k) Spud bars shall be of hard wood with smooth round handle end for safe handling. Iron shod spud bars are prohibited.

(l) A follower block or driving cap shall be used with a drop hammer on all piling except sheet piling.

(m) Steam hose leading to a steam hammer or jet pipe shall be securely attached to the hammer with an adequate length of at least 1/4-inch diameter chain or cable to prevent whipping in the event the joint at the hammer is broken. Air hammer hoses shall be provided with the same protection as required for steam lines.

(n) Safety chains, or equivalent means, shall be provided for each hose connection to prevent the line from thrashing around in case the coupling becomes disconnected.

(o) Steam line controls shall consist of two shutoff valves, one of which shall be a quick-acting lever type within easy reach of the hammer operator.

(p) Guys, outriggers, thrustouts, or counterbalances shall be provided as necessary to maintain stability of pile driver rigs.

(q) Ladders constructed in compliance with this chapter shall be installed on all pile drivers from the hoist platform to the head block, and in such position that workers using ladders will not come in contact with lines, sheaves, etc.

(r) Drop hammers which have been chipped on the face shall not be used for pile driving.

(s) Groove worn drums or spools shall be replaced or properly repaired to present a smooth working surface.

(t) At least two full wraps of cable shall be maintained on hoisting drums.

(u) Proper racks shall be provided for storage of crosscut saws.

(v) Every hoisting drum used as a pile driver shall be equipped with manually operated dogs or pawls to hold suspended loads. Foot brakes shall only be used to hold suspended loads until drum dogs are engaged. The dogs shall be visible from the operator's station or be equipped with a positive direct connected telltale which shall be visible to the operator.

(w) No counterweight or spring arrangement on dogs shall be permitted which would allow dog to be automatically disengaged either by relieving the load or rolling the drum.

(x) In every crew there shall be designated signalperson. The driver operator or drum person shall receive signals from no others, except when loftworker is above. The hammer shall not be lowered except on the loftworker's signal.

(y) Spliced hammer lines shall not be used.

(2) Pile driving from barges and floats. Barges or floats supporting pile driving operations shall meet the applicable requirements of WAC 296-155-630.

(3) Pile driving equipment.

(a) Engineers and winchperson shall accept signals only from the designated signalperson.

(b) All employees shall be kept clear when piling is being hoisted into the leads.

(c) When piles are being driven in an excavated pit, the walls of the pit shall be sloped to the angle of repose or sheet-piled and braced.

(d) When steel tube piles are being "blown out," employees shall be kept well beyond the range of falling materials.

(e) When it is necessary to cut off the tops of driven piles, pile driving operations shall be suspended except where the cutting operations are located at least twice the length of the longest pile from the driver.

(f) When driving jacked piles, all access pits shall be provided with ladders and bulkheaded curbs to prevent material from falling into the pit.

(g) Floating equipment such as dredges and pile drivers shall maintain a signal system to shore in the event of an emergency.

(h) The distribution of machinery on floating equipment shall be such that the completed unit floats on an even keel.

(i) Fuel tanks below decks shall be vented to outside of hull and vents shall be equipped with flame arrestors.

(j) All hull compartments shall be ventilated. No person shall work in hull compartments until it is shown the compartments contain no flammable or toxic concentrations.

(k) Light fixtures installed or used within the hull shall be explosion proof.

(l) All floating rigs shall be equipped with ladderways extending from the deck to the waterline where the deck is more than 36 inches above the water. A wire rope shall be hung along both sides of the hull or float and so hung that it shall be at all times near or at the waterline.

(m) Doors of deck houses where deck house sets within 36" of edge of deck and doorways in hull shall be equipped with guard rails or cross chains.

(n) Deck houses shall have a substantial grab rail installed on all sides where such installation will not interfere with operations.

(o) Pile driver and dredge fairlead sheaves, and spudline sheaves shall be guarded to prevent workers or tools being drawn into them.

(p) All work deck shall be kept clear of debris, unnecessary tools and equipment in order to minimize the stumbling hazard. Lines shall be coiled, tools stored and material stacked clear of working spaces.

(q) Night operations shall be adequately lighted for all activity while work is in progress and shall be maintained until workers leave the work area.

(r) Electrical installation and equipment shall be installed and maintained in compliance with the National Electric Code.

(s) All walkways over water and on dredge pontoon discharge pipe lines shall be a minimum of 20" in width with standard handrail along one side on structures and gang planks. Walkways on pontoon lines may be equipped with hand lines in lieu of standard handrail.

(t) Adequate fire extinguishing equipment shall be provided and maintained in a serviceable condition.

(u) Protective equipment shall be used when working with creosote timbers. Protective creams shall be used on exposed skin surfaces and gloves and eye protection worn especially when driving piles.

(v) Pulling piles with hammer or pile line rigged through the head block is prohibited unless driver and rigging are designed to safely withstand the imposed strain.

(w) Truck runways and platforms shall be equipped with a wheel guard on all outside edges. Top of wheel guards shall be a minimum of 10 inches above deck.

(x) Use of foot blocks at base of leads for hammer line or pile line is prohibited.

[Statutory Authority: Chapter 49.17 RCW. WSR 94-15-096 (Order 94-07), § 296-155-620, filed 7/20/94, effective 9/20/94; WSR 91-03-044 (Order 90-18), § 296-155-620, filed 1/10/91, effective 2/12/91; Order 76-29, § 296-155-620, filed 9/30/76; Order 74-26, § 296-155-620, filed 5/7/74, effective 6/6/74.]

WAC 296-155-625 Site clearing. (1) General.

(a) The word "clearing" means the removal of trees, stumps, logs, brush, debris and rubbish from the surface of the ground in preparation of a site for construction work of any kind. The removal of trees and logs shall be in accordance with the requirements of chapter 296-54 WAC.

(b) All equipment and tools such as axes, sledges, wedges, saws, springboards, etc., shall be maintained in a safe condition and guarded with standard safeguards.

(c) Fallers shall give warning to brushing crews, buckers and other persons in the vicinity where a tree is being felled; taking notice that such persons are not only out of the reach of tree, but also out of danger of possible sidewinders, snags or other trees which may be knocked over by the tree being felled.

(d) Trees must not be felled toward and within range of a traveled road or operational railroad unless a flagger is used to stop all approaching persons, vehicles, or railroad equipment. Flaggers and flagging activities at the site must comply with the requirements of WAC 296-155-305.

(e) Clearing crews shall not be placed immediately below other crews working on hillsides where there is a possible danger of skidding or rolling trees, moving earth or rock.

(f) Pioneer roads on clearing operations shall be constructed to safely accommodate all equipment moved over road.

(g) Hazardous standing and down timber, rocks, etc., shall be moved from upper sides of cuts on side hill operations.

(h) Care shall be exercised in the use of oil for burning brush or timber.

(i) Employees engaged in site clearing shall be protected from hazards of irritant and toxic plants and suitably instructed in the first-aid treatment available.

(j) All equipment used in site clearing operations shall be equipped with rollover guards meeting the requirements of this chapter. In addition, rider-operated equipment shall be equipped with an overhead and rear canopy guard meeting the following requirements:

(i) The overhead covering on this canopy structure shall be of not less than 1/8-inch steel plate or 1/4-inch woven wire mesh with openings no greater than 1 inch, or equivalent.

(ii) The opening in the rear of the canopy structure shall be covered with not less than 1/4-inch woven wire mesh with openings no greater than 1 inch.

(iii) Use of 1/2 inch thick plastic sheets or other thicknesses of plastic panels derived from polycarbonate, acrylic, cellulose acetate butyrate which provides equivalent or better protection against particular hazards involved is acceptable in lieu of 1 or 1 3/4 inch open mesh material.

(A) All panels shall be installed in a manner which can withstand the initial impact, and maintain the protective barrier integrity; and

(B) All panels must be labeled or marked to distinguish between acceptable and inferior materials.

(k) In addition to observance of the general safety and health standards;

(i) The employer shall assume the responsibility of work assignment so that no worker shall be required to work in a position or location so isolated as to not be within ordinary calling distance of another person who can render assistance in case of emergency. In any operation where cutting, felling trees, loading, or a combination of these duties is carried on, there shall be a minimum crew of two persons who shall work as a team and shall be in visual or voice contact with one another. If one worker at these operations is required to be left alone for a period of time, the worker shall be contacted by another person at reasonable intervals not to exceed fifteen minutes unless such practice can be established to be impractical.

(ii) This does not apply to operators of motor vehicles, watchpersons or certain other jobs which, by their nature, are singular worker assignments. However, a definite procedure for checking the welfare of all workers during working hours shall be instituted and all workers so advised.

[Statutory Authority: RCW 49.17.010, [49.17].040, [49.17].050, 2000 c 239, and chapter 34.05 RCW. WSR 01-04-015, § 296-155-625, filed 1/26/01, effective 2/28/01. Statutory Authority: Chapter 49.17 RCW. WSR 94-15-096 (Order 94-07), § 296-155-625, filed 7/20/94, effective 9/20/94; WSR 91-03-044 (Order 90-18), § 296-155-625, filed 1/10/91, effective 2/12/91. Statutory Authority: RCW 49.17.040 and 49.17.050. WSR 86-03-074 (Order 86-14), § 296-155-625, filed 1/21/86; Order 74-26, § 296-155-625, filed 5/7/74, effective 6/6/74.]

WAC 296-155-630 Marine operations and equipment. (1) Material handling operations.

Operations fitting the definition of "material handling" shall be performed in conformance with applicable requirements of "Safety and health regulations for longshoring." The term "longshoring operations" means the loading, unloading, moving, or handling of construction materials, equipment and supplies, etc. into, in, on, or out of any vessel, from a fixed structure or shore-to-vessel, vessel-to-shore or fixed structure or vessel-to-vessel.

(2) Access to barges.

(a) Ramps for access of vehicles to or between barges shall be of adequate strength, provided with side boards, well maintained, and properly secured.

(b) Unless employees can step safely to or from the wharf, float, barge, or river towboat, either a ramp, meeting the requirements of (a) of this subsection, or a safe walkway, shall be provided.

(c) Jacob's ladders shall be of the double rung or flat tread type. They shall be well maintained and properly secured.

(d) A Jacob's ladder shall either hang without slack from its lashings or be pulled up entirely.

(e) When the upper end of the means of access rests on or is flush with the top of the bulwark, substantial steps, properly secured and equipped with at least one substantial hand rail approximately 33 inches in height, shall be provided between the top of the bulwark and the deck.

(f) Obstructions shall not be laid on or across the gangway.

(g) The means of access shall be adequately illuminated for its full length.

(h) Unless the structure makes it impossible, the means of access shall be so located that the load will not pass over employees.

(3) Working surfaces of barges.

(a) Employees shall not be permitted to walk along the sides of covered lighters or barges with coamings more than 5 feet high, unless there is a 3-foot clear walkway, or a grab rail, or a taut handline is provided.

(b) Decks and other working surfaces shall be maintained in a safe condition.

(c) Employees shall not be permitted to pass fore and aft, over, or around deckloads, unless there is a safe passage.

(d) Employees shall not be permitted to walk over deckloads from rail to coaming unless there is a safe passage. If it is necessary to stand at the outboard or inboard edge of the deckload where less than 24 inches of bulwark, rail, coaming, or other protection exists, all employees shall be provided with a suitable means of protection against falling from the deckload.

(4) First-aid and lifesaving equipment.

(a) Provisions for rendering first aid and medical assistance shall be in accordance with Part B of this Chapter.

(b) The employer shall ensure that there is in the vicinity of each barge in use at least one U.S. Coast Guard-approved 30-inch life ring with not less than 90 feet of line attached, and at least one portable or permanent ladder which will reach the top of the apron to the surface of the water. If the above equipment is not available at the pier, the employer shall furnish it during the time that the employer is working the barge.

(c) Employees walking or working on the unguarded decks of barges shall be protected with U.S. Coast Guard-approved personal flotation devices such as Type I PFD, Type II PFD, Type III PFD, or Type V PFD, or their equivalent, pursuant to 46 C.F.R. 160 (Coast Guard Lifesaving Equipment Specifications) and 33 C.F.R. 175.23 (Coast Guard table of devices equivalent to personal flotation devices). Ski belt or inflatable type personal flotation devices are specifically prohibited.

(5) Diving operations. (Reserved.)

[Statutory Authority: Chapter 49.17 RCW. WSR 94-15-096 (Order 94-07), § 296-155-630, filed 7/20/94, effective 9/20/94; Order 76-29, § 296-155-630, filed 9/30/76; Order 74-26, § 296-155-630, filed 5/7/74, effective 6/6/74.]

PART N

EXCAVATION, TRENCHING, AND SHORING

WAC 296-155-650 Scope, application, and definitions applicable to this part. (1) Scope and application. This part applies to all open excavations made in the earth's surface. Excavations are defined to include trenches.

(2) Definitions applicable to this part.

(a) "Accepted engineering requirements or practices." Those requirements which are compatible with standards of practice required by a registered professional engineer.

(b) "Aluminum hydraulic shoring." A preengineered shoring system comprised of aluminum hydraulic cylinders (crossbraces) used in conjunction with vertical rails (uprights) or horizontal rails (walers). Such system is designed, specifically to support the sidewalls of an excavation and prevent cave-ins.

(c) "Bell-bottom pier hole." A type of shaft or footing excavation, the bottom of which is made larger than the cross section above to form a belled shape.

(d) "Benching (benching system)." A method of protecting employees from cave-ins by excavating the sides of an excavation to form one or a series of horizontal levels or steps, usually with vertical or near-vertical surfaces between levels.

(e) "Cave-in." The separation of a mass of soil or rock material from the side of an excavation, or loss of soil from under a trench shield or support system, and its sudden movement into the excavation in quantity that it could entrap, bury, injure, or immobilize a person.

(f) "Competent person." One who can identify existing or predictable hazards in the surroundings that are unsanitary, hazardous, or dangerous to employees. Also has authorization or authority by the nature of their position to take prompt corrective measures to eliminate them. The person shall be knowledgeable in the requirements of this part.

(g) "Cross braces." The horizontal members of a shoring system installed perpendicular to the sides of the excavation, the ends of which bear against either uprights or wales.

(h) "Excavation." Any person-made cut, cavity, trench, or depression in the earth's surface, formed by earth removal.

(i) "Faces or sides." The vertical or inclined earth surfaces formed as a result of excavation work.

(j) "Failure." The breakage, displacement, or permanent deformation of a structural member or connection so as to reduce its structural integrity and its supportive capabilities.

(k) "Hazardous atmosphere." A atmosphere which by reason of being explosive, flammable, poisonous, corrosive, oxidizing, irritating, oxygen deficient, toxic, or otherwise harmful, may cause death, illness, or injury.

(l) "Kickouts." Accidental release or failure of a cross brace.

(m) "Protective system." A method of protecting employees from cave-ins, from material that could fall or roll from an excavation face or into an excavation, or from the collapse of adjacent structures. Protective systems include support systems, sloping and benching systems, shield systems, and other systems that provide the necessary protection.

(n) "Ramp." An inclined walking or working surface that is used to gain access to one point to another, and is constructed from earth or from structural materials such as steel or wood.

(o) "Registered professional engineer." A person who is registered as a professional engineer in the state of Washington. The registered professional engineer shall comply with the Washington state department of licensing requirements, chapter 18.43 RCW.

(p) "Sheeting." The members of a shoring system that retain the earth in position and in turn are supported by other members of the shoring system.

(q) "Shield (shield system)." A structure that is able to withstand the forces imposed on it by a cave-in and thereby protect employees within the structure. Shields can be permanent structures or can be designed to be portable and moved along as work progresses. Additionally, shields can be either premanufactured or job-built in accordance with WAC 296-155-657 (3)(c) or (d). Shields used in trenches are usually referred to as "trench boxes" or "trench shields."

(r) "Shoring (shoring system)." A structure such as a metal hydraulic, mechanical, or timber shoring system that supports the sides of an excavation and which is designed to prevent cave-ins.

(s) "Sides." See "faces."

(t) "Sloping (sloping system)." A method of protecting employees from cave-ins by excavating to form sides of an excavation that are inclined away from the excavation so as to prevent cave-ins. The angle of incline required to prevent a cave-in varies with differences in such factors as the soil type, environmental conditions of exposure, and application of surcharge loads.

(u) "Stable rock." A natural solid mineral material that can be excavated with vertical sides and will remain intact while exposed. Unstable rock is considered to be stable when the rock material on the side or sides of the excavation is secured against caving-in or movement by rock bolts or by another protective system that has been designed by a registered professional engineer.

(v) "Structural ramp." A ramp built of steel or wood, usually used for vehicle access. Ramps made of soil or rock are not considered structural ramps.

(w) "Support system." A structure such as underpinning, bracing or shoring, which provides support to an adjacent structure, underground installation, or the sides of an excavation.

(x) "Tabulated data." Tables and charts approved by a registered professional engineer and used to design and construct a protective system.

(y) "Trench (trench excavation)." A narrow excavation in relation to its length made below the surface of the ground. In general, the depth is greater than the width, but the width of a trench (measured at the bottom) is not greater than 15 feet (4.6m). If forms or other structures are installed or constructed in an excavation so as to reduce the dimension measured from the forms or structure to the side of the excavation to 15 feet (4.6 m) or less (measured at the bottom of the excavation), the excavation is also considered to be a trench.

(z) Trench box. See "shield."

(aa) "Trench shield." See "shield."

(bb) "Uprights." The vertical members of a trench shoring system placed in contact with the earth and usually positioned so that individual members do not contact each other. Uprights placed so that individual members are closely spaced, in contact with or interconnected to each other, are often called "sheeting."

(cc) "Wales." Horizontal members of a shoring system placed parallel to the excavation face whose sides bear against the vertical members of the shoring system or earth.

[Statutory Authority: Chapter 49.17 RCW. WSR 94-15-096 (Order 94-07), § 296-155-650, filed 7/20/94, effective 9/20/94. Statutory Authority: Chapter 49.17 RCW and RCW 49.17.040, [49.17].050 and [49.17].060. WSR 92-22-067 (Order 92-06), § 296-155-650, filed 10/30/92, effective 12/8/92. Statutory Authority: Chapter 49.17 RCW. WSR 91-03-044 (Order 90-18), § 296-155-650, filed 1/10/91, effective 2/12/91. Statutory Authority: RCW 49.17.040 and 49.17.050. WSR 86-03-074 (Order 86-14), § 296-155-650, filed 1/21/86. Statutory Authority: RCW 49.17.040, 49.17.050 and 49.17.240. WSR 81-13-053 (Order 81-9), § 296-155-650, filed 6/17/81; Order 74-26, § 296-155-650, filed 5/7/74, effective 6/6/74.]

WAC 296-155-655 General protection requirements. (1) Surface encumbrances. All surface encumbrances that are located so as to create a hazard to employees shall be removed or supported, as necessary, to safeguard employees.

(2) Underground installations.

(a) The location of utility installations, such as sewer, telephone, fuel, electric, water lines, or any other underground installations that reasonably may be expected to be encountered during excavation work, shall be located prior to opening an excavation.

(b) Utility companies or owners shall be contacted within established or customary local response times, advised of the proposed work, and asked to locate the underground utility installation prior to the start of actual excavation.

(c) When excavation operations approach the location of underground installations, the exact location of the installations shall be determined by safe and acceptable means.

(d) While the excavation is open, underground installations shall be protected, supported, or removed as necessary to safeguard employees.

(3) Access and egress.

(a) Structural ramps.

(i) Structural ramps that are used solely by employees as a means of access or egress from excavations shall be designed by a competent person. Structural ramps used for access or egress of equipment shall be designed by a competent person qualified in structural design, and shall be constructed in accordance with the design.

(ii) Ramps and runways constructed of two or more structural members shall have the structural members connected together to prevent displacement.

(iii) Structural members used for ramps and runways shall be of uniform thickness.

(iv) Cleats or other appropriate means used to connect runway structural members shall be attached to the bottom of the runway or shall be attached in a manner to prevent tripping.

(v) Structural ramps used in lieu of steps shall be provided with cleats or other surface treatments on the top surface to prevent slipping.

(b) Means of egress from trench excavations. A stairway, ladder, ramp or other safe means of egress shall be located in trench excavations that are 4 feet (1.22 m) or more in depth so as to require no more than 25 feet (7.62 m) of lateral travel for employees.

(4) Exposure to vehicular traffic. Employees exposed to vehicular traffic shall be provided with and shall wear high-visibility garments meeting the requirements of WAC 296-155-200, General requirements for personal protective equipment (PPE).

(5) Exposure to falling loads. No employee shall be permitted underneath loads handled by lifting or digging equipment. Employees shall be required to stand away from any vehicle being loaded or unloaded to avoid being struck by any spillage or falling materials. Operators may remain in the cabs of vehicles being loaded or unloaded when the vehicles are equipped, in accordance with WAC 296-155-610 (2)(g), to provide adequate protection for the operator during loading and unloading operations.

(6) Warning system for mobile equipment. When mobile equipment is operated adjacent to an excavation, or when such equipment is required to approach the edge of an excavation, and the operator does not have a clear and direct view of the edge of the excavation, a warning system shall be utilized such as barricades, hand or mechanical signals, or stop logs. If possible, the grade should be away from the excavation.

(7) Hazardous atmospheres.

(a) Testing and controls. In addition to the requirements set forth in parts B-1, C, and C-1 of this chapter (296-155 WAC) to prevent exposure to harmful levels of atmospheric contaminants and to assure acceptable atmospheric conditions, the following requirements shall apply:

(i) Where oxygen deficiency (atmospheres containing less than 19.5 percent oxygen) or a hazardous atmosphere exists or could reasonably be expected to exist, such as in excavations in landfill areas or excavations in areas where hazardous substances are stored nearby, the atmospheres in the excavation shall be tested before employees enter excavations greater than 4 feet (1.22 m) in depth.

(ii) Adequate precautions shall be taken to prevent employee exposure to atmospheres containing less than 19.5 percent oxygen and other hazardous atmospheres. These precautions include providing proper respiratory protection or ventilation in accordance with chapter 296-842 WAC.

(iii) Adequate precaution shall be taken such as providing ventilation, to prevent employee exposure to an atmosphere containing a concentration of a flammable gas in excess of 10 percent of the lower flammable limit of the gas.

(iv) When controls are used that are intended to reduce the level of atmospheric contaminants to acceptable levels, testing shall be conducted as often as necessary to ensure that the atmosphere remains safe.

(b) Emergency rescue equipment.

(i) Emergency rescue equipment, such as breathing apparatus, a safety harness and line, or a basket stretcher, shall be readily available where hazardous atmospheric conditions exist or may reasonably be expected to develop during work in an excavation. This equipment shall be attended when in use.

(ii) Employees entering bell-bottom pier holes, or other similar deep and confined footing excavations, shall wear a harness with a lifeline securely attached to it. The lifeline

shall be separate from any line used to handle materials, and shall be individually attended at all times while the employee wearing the lifeline is in the excavation.

Note: See chapter 296-62 WAC, Part M for additional requirements applicable to confined space operations.

(8) Protection from hazards associated with water accumulation.

(a) Employees shall not work in excavations in which there is accumulated water, or in excavations in which water is accumulating, unless adequate precautions have been taken to protect employees against the hazards posed by water accumulation. The precautions necessary to protect employees adequately vary with each situation, but could include special support or shield systems to protect from cave-ins, water removal to control the level of accumulating water, or use of a safety harness and lifeline.

(b) If water is controlled or prevented from accumulating by the use of water removal equipment, the water removal equipment and operations shall be monitored by a competent person to ensure proper operation.

(c) If excavation work interrupts the natural drainage of surface water (such as streams), diversion ditches, dikes, or other suitable means shall be used to prevent surface water from entering the excavation and to provide adequate drainage of the area adjacent to the excavation. Excavations subject to runoff from heavy rains will require an inspection by a competent person and compliance with subdivisions (a) and (b) of this subsection.

(9) Stability of adjacent structures.

(a) Where the stability of adjoining buildings, walls, or other structures is endangered by excavation operations, support systems such as shoring, bracing, or underpinning shall be provided to ensure the stability of such structures for the protection of employees.

(b) Excavation below the level of the base or footing of any foundation or retaining wall that could be reasonably expected to pose a hazard to employees shall not be permitted except when:

(i) A support system, such as underpinning, is provided to ensure the safety of employees and the stability of the structure; or

(ii) The excavation is in stable rock; or

(iii) A registered professional engineer has approved the determination that the structure is sufficiently removed from the excavation so as to be unaffected by the excavation activity; or

(iv) A registered professional engineer has approved the determination that such excavation work will not pose a hazard to employees.

(c) Sidewalks, pavements, and appurtenant structure shall not be undermined unless a support system or another method of protection is provided to protect employees from the possible collapse of such structures.

(10) Protection of employees from loose rock or soil.

(a) Adequate protection shall be provided to protect employees from loose rock or soil that could pose a hazard by falling or rolling from an excavation face. Such protection shall consist of scaling to remove loose material; installation of protective barricades at intervals as necessary on the face to stop and contain falling material; or other means that provide equivalent protection.

(b) Employees shall be protected from excavated or other materials or equipment that could pose a hazard by falling or rolling into excavations. Protection shall be provided by placing and keeping such materials or equipment at least 2 feet (.61 m) from the edge of excavations, or by the use of retaining devices that are sufficient to prevent materials or equipment from falling or rolling into excavations, or by a combination of both if necessary.

(11) Inspections.

(a) Daily inspections of excavations, the adjacent areas, and protective systems shall be made by a competent person for evidence of a situation that could result in possible cave-ins, indications of failure of protective systems, hazardous atmospheres, or other hazardous conditions. An inspection shall be conducted by the competent person prior to the start of work and as needed throughout the shift. Inspections shall also be made after every rainstorm or other hazard increasing occurrence. These inspections are only required when employee exposure can be reasonably anticipated.

(b) Where the competent person finds evidence of a situation that could result in a possible cave-in, indications of failure of protective systems, hazardous atmospheres, or other hazardous conditions, exposed employees shall be removed from the hazardous area until the necessary precautions have been taken to ensure their safety.

(12) Fall protection.

(a) Walkways shall be provided where employees or equipment are required or permitted to cross over excavations. Guardrails which comply with chapter 296-155 WAC, Part C-1 shall be provided where walkways are 4 feet or more above lower levels.

(b) Adequate barrier physical protection shall be provided at all remotely located excavations. All wells, pits, shafts, etc., shall be barricaded or covered. Upon completion of exploration and similar operations, temporary wells, pits, shafts, etc., shall be backfilled.

[Statutory Authority: RCW 49.17.010, 49.17.040, 49.17.050, 49.17.060 and 29 C.F.R. 1926, Subpart M, Fall Protection. WSR 13-04-073, § 296-155-655, filed 2/4/13, effective 4/1/13. Statutory Authority: RCW 49.17.010, 49.17.040, 49.17.050, 49.17.060. WSR 05-20-055, § 296-155-655, filed 10/3/05, effective 12/1/05; WSR 05-03-093, § 296-155-655, filed 1/18/05, effective 3/1/05; WSR 04-24-089, § 296-155-655, filed 12/1/04, effective 1/1/05. Statutory Authority: RCW 49.17.010, [49.17].040 and [49.17].050. WSR 99-17-094, § 296-155-655, filed 8/17/99, effective 12/1/99; WSR 99-10-071, § 296-155-655, filed 5/4/99, effective 9/1/99. Statutory Authority: RCW 49.17.040, [49.17].050 and [49.17].060. WSR 96-24-051, § 296-155-655, filed 11/27/96, effective 2/1/97. Statutory Authority: Chapter 49.17 RCW. WSR 95-10-016, § 296-155-655, filed 4/25/95, effective 10/1/95. Statutory Authority: Chapter 49.17 RCW and RCW 49.17.040, [49.17].050 and [49.17].060. WSR 92-22-067 (Order 92-06), § 296-155-655, filed 10/30/92, effective 12/8/92. Statutory Authority: Chapter 49.17 RCW. WSR 91-03-044 (Order 90-18), § 296-155-655, filed 1/10/91, effective 2/12/91. Statutory Authority: RCW 49.17.040 and 49.17.050. WSR 86-03-074 (Order 86-14), § 296-155-655, filed 1/21/86. Statutory Authority: RCW 49.17.040, 49.17.050 and 49.17.240. WSR 81-13-053 (Order 81-9), § 296-155-655, filed 6/17/81; Order 76-29, § 296-155-655, filed 9/30/76; Order 74-26, § 296-155-655, filed 5/7/74, effective 6/6/74.]

WAC 296-155-657 Requirements for protective systems. (1) Protection of employees in excavations.

(a) Each employee in an excavation shall be protected from cave-ins by an adequate protective system designed in

accordance with subsections (2) or (3) of this section except when:

(i) Excavations are made entirely in stable rock; or

(ii) Excavations are less than 4 feet (1.22m) in depth and examination of the ground by a competent person provides no indication of a potential cave-in.

(b) Protective systems shall have the capacity to resist without failure all loads that are intended or could reasonably be expected to be applied or transmitted to the system.

(2) Design of sloping and benching systems. The slopes and configurations of sloping and benching systems shall be selected and constructed by the employer or employer's designee and shall be in accordance with the requirements of subdivision (a); or, in the alternative, subdivision (b); or, in the alternative, subdivision (c); or, in the alternative, subdivision (d), as follows:

(a) Option 1—Allowable configurations and slopes.

(i) Excavations shall be sloped at an angle not steeper than one and one-half horizontal to one vertical (34 degrees measured from the horizontal), unless the employer uses one of the other options listed below.

(ii) Slopes specified in item (i) of this subdivision, shall be excavated to form configurations that are in accordance with the slopes shown for Type C soil in Appendix B to this part.

(b) Option 2—Determination of slopes and configurations using Appendices A and B. Maximum allowable slopes, and allowable configurations for sloping and benching systems, shall be determined in accordance with the conditions and requirements set forth in appendices A and B to this part.

(c) Option 3—Designs using other tabulated data.

(i) Designs of sloping or benching systems shall be selected from and be in accordance with tabulated data, such as tables and charts.

(ii) The tabulated data shall be in written form and shall include all of the following:

(A) Identification of the parameters that affect the selection of a sloping or benching system drawn from such data;

(B) Identification of the limits of use of the data, to include the magnitude and configuration of slopes determined to be safe;

(C) Explanatory information as may be necessary to aid the user in making a correct selection of a protective system from the data.

(iii) At least one copy of the tabulated data which identifies the registered professional engineer who approved the data, shall be maintained at the jobsite during construction of the protective system. After that time the data may be stored off the jobsite, but a copy of the data shall be made available to the director upon request.

(d) Option 4—Design by a registered professional engineer.

(i) Sloping and benching systems not utilizing Option 1 or Option 2 or Option 3 under subsection (2) of this section shall be approved by a registered professional engineer.

(ii) Designs shall be in written form and shall include at least the following:

(A) The magnitude of the slopes that were determined to be safe for the particular project;

(B) The configurations that were determined to be safe for the particular project; and

(C) The identity of the registered professional engineer approving the design.

(iii) At least one copy of the design shall be maintained at the jobsite while the slope is being constructed. After that time the design need not be at the jobsite, but a copy shall be made available to the director upon request.

(3) Design of support systems, shield systems, and other protective systems. Designs of support systems, shield systems, and other protective systems shall be selected and constructed by the employer or employer's designee and shall be in accordance with the requirements of subdivision (a); or, in the alternative, subdivision (b); or, in the alternative, subdivision (c); or, in the alternative, subdivision (d) as follows:

(a) Option 1—Designs using appendices A, C, and D. Designs for timber shoring in trenches shall be determined in accordance with the conditions and requirements set forth in appendices A and C to this part. Designs for aluminum hydraulic shoring shall be in accordance with subdivision (b) of this subsection, but if manufacturer's tabulated data cannot be utilized, designs shall be in accordance with appendix D.

(b) Option 2—Designs using manufacturer's tabulated data.

(i) Design of support systems, shield systems, or other protective systems that are drawn from manufacturer's tabulated data shall be in accordance with all specifications, recommendations, and limitations issued or made by the manufacturer.

(ii) Deviation from the specifications, recommendations, and limitations issued or made by the manufacturer shall only be allowed after the manufacturer issues specific written approval.

(iii) Manufacturer's specifications, recommendations, and limitations, and manufacturer's approval to deviate from the specifications, recommendations, and limitations shall be in written form at the jobsite during construction of the protective system. After that time this data may be stored off the jobsite, but a copy shall be made available to the director upon request.

(c) Option 3—Designs using other tabulated data.

(i) Designs of support systems, shield systems, or other protective systems shall be selected from and be in accordance with tabulated data, such as tables and charts.

(ii) The tabulated data shall be in written form and include all of the following:

(A) Identification of the parameters that affect the selection of a protective system drawn from such data;

(B) Identification of the limits of use of the data;

(C) Explanatory information as may be necessary to aid the user in making a correct selection of a protective system from the data.

(iii) At least one copy of the tabulated data, which identifies the registered professional engineer who approved the data, shall be maintained at the jobsite during construction of the protective system. After that time the data may be stored off the jobsite, but a copy of the data shall be made available to the director upon request.

(d) Option 4—Design by a registered professional engineer.

(i) Support systems, shield systems, and other protective systems not utilizing Option 1, Option 2 or Option 3, above, shall be approved by a registered professional engineer.

(ii) Designs shall be in written form and shall include the following:

(A) A plan indicating the sizes, types, and configurations of the materials to be used in the protective system; and

(B) The identity of the registered professional engineer approving the design.

(iii) At least one copy of the design shall be maintained at the jobsite during construction of the protective system. After that time, the design may be stored off the jobsite, but a copy of the design shall be made available to the director upon request.

(4) Materials and equipment.

(a) Materials and equipment used for protective systems shall be free from damage or defects that might impair their proper function.

(b) Manufactured materials and equipment used for protective systems shall be used and maintained in a manner that is consistent with the recommendations of the manufacturer, and in a manner that will prevent employee exposure to hazards.

(c) When material or equipment that is used for protective systems is damaged, a competent person shall examine the material or equipment and evaluate its suitability for continued use. If the competent person cannot assure the material or equipment is able to support the intended loads or is otherwise suitable for safe use, then such material or equipment shall be removed from service, and shall be evaluated and approved by a registered professional engineer before being returned to service.

(5) Installation and removal of support.

(a) General.

(i) Members of support systems shall be securely connected together to prevent sliding, falling, kickouts, or other predictable failure.

(ii) Support systems shall be installed and removed in a manner that protects employees from cave-ins, structural collapses, or from being struck by members of the support system.

(iii) Individual members of support systems shall not be subjected to loads exceeding those which those members were designed to withstand.

(iv) Before temporary removal of individual members begins, additional precautions shall be taken to ensure the safety of employees, such as installing other structural members to carry the loads imposed on the support system.

(v) Removal shall begin at, and progress from, the bottom of the excavation. Members shall be released slowly so as to note any indication of possible failure of the remaining members of the structure or possible cave-in of the sides of the excavation.

(vi) Backfilling shall progress together with the removal of support systems from excavations.

(b) Additional requirements for support systems for trench excavations.

(i) Excavation of material to a level no greater than 2 feet (.61 m) below the bottom of the members of a support system shall be permitted, but only if the system is designed to resist the forces calculated for the full depth of the trench, and there are no indications while the trench is open of a possible loss of soil from behind or below the bottom of the support system.

(ii) Installation of a support system shall be closely coordinated with the excavation of trenches.

(6) Sloping and benching systems. Employees shall not be permitted to work on the faces of sloped or benched excavations at levels above other employees except when employees at the lower levels are adequately protected from the hazard of falling, rolling, or sliding material or equipment.

(7) Shield systems.

(a) General.

(i) Shield systems shall not be subjected to loads exceeding those which the system was designed to withstand.

(ii) Shields shall be installed in a manner to restrict lateral or other hazardous movement of the shield in the event of the application of sudden lateral loads.

(iii) Employees shall be protected from the hazard of cave-ins when entering or exiting the areas protected by shields.

(iv) Employees shall not be allowed in shields when shields are being installed, removed, or moved vertically.

(b) Additional requirement for shield systems used in trench excavations. Excavations of earth material to a level not greater than 2 feet (.61 m) below the bottom of a shield shall be permitted, but only if the shield is designed to resist the forces calculated for the full depth of the trench, and there are no indications while the trench is open of a possible loss of soil from behind or below the bottom of the shield.

[Statutory Authority: Chapter 49.17 RCW and RCW 49.17.040, [49.17].050 and [49.17].060. WSR 92-22-067 (Order 92-06), § 296-155-657, filed 10/30/92, effective 12/8/92. Statutory Authority: Chapter 49.17 RCW. WSR 91-03-044 (Order 90-18), § 296-155-657, filed 1/10/91, effective 2/12/91.]

WAC 296-155-66103 Reserved.

[Statutory Authority: Chapter 49.17 RCW and RCW 49.17.040, [49.17].050 and [49.17].060. WSR 92-22-067 (Order 92-06), § 296-155-66103, filed 10/30/92, effective 12/8/92. Statutory Authority: Chapter 49.17 RCW. WSR 91-03-044 (Order 90-18), § 296-155-66103, filed 1/10/91, effective 2/12/91.]

WAC 296-155-66105 Reserved.

[Statutory Authority: Chapter 49.17 RCW and RCW 49.17.040, [49.17].050 and [49.17].060. WSR 92-22-067 (Order 92-06), § 296-155-66105, filed 10/30/92, effective 12/8/92. Statutory Authority: Chapter 49.17 RCW. WSR 91-03-044 (Order 90-18), § 296-155-66105, filed 1/10/91, effective 2/12/91.]

WAC 296-155-66109 Reserved.

[Statutory Authority: Chapter 49.17 RCW and RCW 49.17.040, [49.17].050 and [49.17].060. WSR 92-22-067 (Order 92-06), § 296-155-66109, filed 10/30/92, effective 12/8/92. Statutory Authority: Chapter 49.17 RCW. WSR 91-03-044 (Order 90-18), § 296-155-66109, filed 1/10/91, effective 2/12/91.]

WAC 296-155-664 Appendices.

[Statutory Authority: Chapter 49.17 RCW and RCW 49.17.040, [49.17].050 and [49.17].060. WSR 92-22-067 (Order 92-06), § 296-155-664, filed 10/30/92, effective 12/8/92. Statutory Authority: Chapter 49.17 RCW. WSR 91-03-044 (Order 90-18), § 296-155-664, filed 1/10/91, effective 2/12/91.]

WAC 296-155-66401 Appendix A—Soil classification. (1) Scope and application.

(a) Scope. This appendix describes a method of classifying soil and rock deposits based on site and environmental

conditions, and on the structure and composition of the earth deposits. The appendix contains definitions, sets forth requirements, and describes acceptable visual and manual tests for use in classifying soils.

(b) Application. This appendix applies when a sloping or benching system is designed in accordance with the requirements set forth in WAC 296-155-657 (2)(b) as a method of protection for employees from cave-ins. This appendix also applies when timber shoring for excavations is designed as a method of protection from cave-ins in accordance with appendix C to part N of this chapter, and when aluminum hydraulic shoring is designed in accordance with appendix D. This Appendix also applies if other protective systems are designed and selected for use from data prepared in accordance with the requirements set forth in WAC 296-155-657(3), and the use of the data is predicated on the use of the soil classification system set forth in this appendix.

(2) Definitions. The definitions and examples given below are based on, in whole or in part, the following; American Society for Testing Materials (ASTM) Standards D653-85 and D2488; The Unified Soils Classification System, The U.S. Department of Agriculture (USDA) Textural Classification Scheme; and The National Bureau of Standards Report BSS-121.

(a) Cemented soil. A soil in which the particles are held together by a chemical agent, such as calcium carbonate such that a hand-size sample cannot be crushed into powder or individual soil particles by finger pressure.

(b) Cohesive soil. Clay (fine grained soil), or soil with a high clay content, which has cohesive strength. Cohesive soil does not crumble, can be excavated with vertical sideslopes, and is plastic when moist. Cohesive soil is hard to break up when dry, and exhibits significant cohesion when submerged. Cohesive soils include clayey silt, sandy clay, silty clay, clay and organic clay.

(c) Dry soil. Soil that does not exhibit visible signs of moisture content.

(d) Fissured. A soil material that has a tendency to break along definite planes of fracture with little resistance, or a material that exhibits open cracks, such as tension cracks, in an exposed surface.

(e) Granular soil. Gravel, sand, or silt, (coarse grained soil) with little or no clay content. Granular soil has no cohesive strength. Some moist granular soils exhibit apparent cohesion. Granular soil cannot be molded when moist and crumbles easily when dry.

(f) Layered system. Two or more distinctly different soil or rock types arranged in layers. Micaceous seams or weakened planes in rock or shale are considered layered.

(g) Moist soil. A condition in which a soil looks and feels damp. Moist cohesive soil can easily be shaped into a ball and rolled into small diameter threads before crumbling. Moist granular soil that contains some cohesive material will exhibit signs of cohesion between particles.

(h) Plastic. A property of a soil which allows the soil to be deformed or molded without cracking, or appreciable volume change.

(i) Saturated soil. A soil in which the voids are filled with water. Saturation does not require flow. Saturation, or near saturation, is necessary for the proper use of instruments such as a pocket penetrometer or sheer vane.

(j) Soil classification system. For the purpose of this part, a method of categorizing soil and rock deposits in a hierarchy of Stable Rock, Type A, Type B, and Type C, in decreasing order of stability. The categories are determined based on an analysis of the properties and performance characteristics of the deposits and the environmental conditions of exposure.

(k) Stable rock. Natural solid mineral matter that can be excavated with vertical sides and remain intact while exposed.

(l) Submerged soil. Soil which is underwater or is free seeping.

(m) Type A. Cohesive soils with an unconfined compressive strength of 1.5 ton per square foot (tsf) (144 kPa) or greater. Examples of cohesive soils are: Clay, silty clay, sandy clay, clay loam and, in some cases, silty clay loam and sandy clay loam. Cemented soils such as caliche and hardpan are also considered Type A. No soil is Type A if:

(i) The soil is fissured; or

(ii) The soil is subject to vibration from heavy traffic, pile driving, or similar effects; or

(iii) The soil has been previously disturbed; or

(iv) The soil is part of a sloped, layered system where the layers dip into the excavation on a slope of 4 horizontal to 1 vertical (4H.1V) or greater; or

(v) The material is subject to other factors that would require it to be classified as a less stable material.

(n) Type B.

(i) Cohesive soil with an unconfined compressive strength greater than 0.5 tsf (48 kPa) but less than 1.5 tsf (144 kPa): or

(ii) Granular cohesionless soils including: Angular gravel (similar to crushed rock), silt, silt loam, sandy loam and, in some cases, silty clay loam and sandy clay loam.

(iii) Previously disturbed soils except those which would otherwise be classed as Type C soil.

(iv) Soil that meets the unconfined compressive strength or cementation requirements for Type A, but is fissured or subject to vibration: or

(v) Dry rock that is not stable: or

(vi) Material that is part of a sloped, layered system where the layers dip into the excavation on a slope less steep than 4 horizontal to 1 vertical (4H.1V), but only if the material would otherwise be classified as Type B.

(o) Type C.

(i) Cohesive soil with an unconfined compressive strength of 0.5 tsf (48 kPa) or less: or

(ii) Granular soils including gravel, sand, and loamy sand: or

(iii) Submerged soil or soil from which water is freely seeping: or

(iv) Submerged rock that is not stable, or

(v) Material in a sloped, layered system where the layers dip into the excavation or a slope of 4 horizontal to 1 vertical (4H.1V) or steeper.

(p) Unconfined compressive strength. The load per unit area at which a soil will fail in compression. It can be determined by laboratory testing, or estimated in the field using a pocket penetrometer, by thumb penetration tests, and other methods.

(q) Wet soil. Soil that contains significantly more moisture than moist soil, but in such a range of values that cohe-

sive material will slump or begin to flow when vibrated. Granular material that would exhibit cohesive properties when moist will lose those cohesive properties when wet.

(3) Requirements.

(a) Classification of soil and rock deposits. Each soil and rock deposit shall be classified by a competent person as Stable Rock, Type A, Type B, or Type C in accordance with the definitions set forth in subsection (2) of this section.

(b) Basis of classification. The classification of the deposits shall be made based on the results of at least one visual and at least one manual analysis. Such analyses shall be conducted by a competent person using tests in subsection (4) of this section or in other recognized methods of soil classification and testing such as those adopted by the American Society for Testing Materials, or the U.S. Department of Agriculture textural classification system.

(c) Visual and manual analyses. The visual and manual analyses, such as those noted as being acceptable in subsection (4) of this section, shall be designed and conducted to provide sufficient quantitative and qualitative information as may be necessary to identify properly the properties, factors, and conditions affecting the classification of the deposits.

(d) Layered systems. In a layered system, the system shall be classified in accordance with its weakest layer. However, each layer may be classified individually where a more stable layer lies under a less stable layer.

(e) Reclassification. If, after classifying a deposit, the properties, factors, or conditions affecting its classification change in any way, the changes shall be evaluated by a competent person. The deposit shall be reclassified as necessary to reflect the changed circumstances.

(4) Acceptable visual and manual tests.

(a) Visual tests. Visual analysis is conducted to determine qualitative information regarding the excavation site in general, the soil adjacent to the excavation, the soil forming the sides of the open excavation, and the soil taken as samples from excavated material.

(i) Observe samples of soil that are excavated and soil in the sides of the excavation. Estimate the range of particle sizes and the relative amounts of the particle sizes. Soil that is primarily composed of fine-grained material is cohesive material. Soil composed primarily of coarse-grained sand or gravel is granular material.

(ii) Observe soil as it is excavated. Soil that remains in clumps when excavated is cohesive. Soil that breaks up easily and does not stay in clumps is granular.

(iii) Observe the side of the opened excavation and the surface area adjacent to the excavation. Crack-like openings such as tension cracks could indicate fissured material. If chunks of soil spall off a vertical side, the soil could be fissured. Small spalls are evidence of moving ground and are indications of potentially hazardous situations.

(iv) Observe the area adjacent to the excavation and the excavation itself for evidence of existing utility and other underground structures, and to identify previously disturbed soil.

(v) Observe the opened side of the excavation to identify layered systems. Examine layered systems to identify if the layers slope toward the excavation. Estimate the degree of slope of the layers.

(vi) Observe the area adjacent to the excavation and sides of the open excavation for evidence of surface water, water seeping from the sides of the excavation, or the location of the level of the water table.

(vii) Observe the area adjacent to the excavation and the area within the excavation for sources of vibration that may affect the stability of the excavation face.

(b) Manual tests. Manual analysis of soil samples is conducted to determine quantitative as well as qualitative properties of soil and to provide more information in order to classify soil properly.

(i) Plasticity. Mold a moist or wet sample of soil into a ball and attempt to roll it into threads as thin as 1/8-inch in diameter. Cohesive material can be successfully rolled into threads without crumbling. For example, if at least a 2 inch (50 mm) length of 1/8-inch thread can be held on one end without tearing, the soil is cohesive.

(ii) Dry strength. If the soil is dry and crumbles on its own or with moderate pressure into individual grains or fine powder, it is granular (any combination of gravel, sand, or silt). If the soil is dry and falls into clumps which break up into smaller clumps, but the smaller clumps can only be broken up with difficulty, it may be clay in any combination with gravel, sand or silt. If the dry soil breaks into clumps which do not break up into small clumps and which can only be broken with difficulty, and there is no visual indication the soil is fissured, the soil may be considered unfissured.

(iii) Thumb penetration. The thumb penetration test can be used to estimate the unconfined compressive strength of cohesive soils. (This test is based on the thumb penetration test described in American Society for Testing and Materials (ASTM) Standard designation D2488-"Standard Recommended Practice for Description of Soils (Visual—Manual Procedure).") Type A soils with an unconfined compressive strength of 1.5 tsf can be readily indented by the thumb; however, they can be and penetrated by the thumb only with very great effort. Type C soils with an unconfined compressive strength of 0.5 tsf can be easily penetrated several inches by the thumb, and can be molded by light finger pressure. This test should be conducted on an undisturbed soil sample, such as a large clump of spoil, as soon as practicable after excavation to keep to a minimum the effects of exposure to drying influences. If the excavation is later exposed to wetting influences (rain, flooding), the classification of the soil must be changed accordingly.

(iv) Other strength tests. Estimates of unconfined compressive strength of soils can also be obtained by use of a pocket penetrometer or by using a hand-operated shear vane.

(v) Drying test. The basic purpose of the drying test is to differentiate between cohesive material with fissures, unfissured cohesive material, and granular material. The procedure for the drying test involves drying a sample of soil that is approximately 1 inch thick (2.54 cm) and 6 inches (15.24 cm) in diameter until it is thoroughly dry:

(A) If the sample develops cracks as it dries, significant fissures are indicated.

(B) Samples that dry without cracking are to be broken by hand. If considerable force is necessary to break a sample, the soil has significant cohesive material content. The soil can be classified as a unfissured cohesive material and the unconfined compressive strength should be determined.

(C) If a sample breaks easily by hand, it is either a fissured cohesive material or a granular material. To distinguish between the two, pulverize the dried clumps of the sample by hand or by stepping on them. If the clumps do not pulverize easily, the material is cohesive with fissures. If they pulverize easily into very small fragments, the material is granular.

[Statutory Authority: Chapter 49.17 RCW and RCW 49.17.040, [49.17].050 and [49.17].060. WSR 92-22-067 (Order 92-06), § 296-155-66401, filed 10/30/92, effective 12/8/92.]

WAC 296-155-66403 Appendix B—Sloping and benching. (1) Scope and application. This appendix contains specifications for sloping and benching when used as methods of protecting employees working in excavations from cave-ins. The requirements of this appendix apply when the design of sloping and benching protective systems is to be performed in accordance with the requirements set forth in WAC 296-155-657 (2)(b).

(2) Definitions.

(a) Actual slope. The slope to which an excavation face is excavated.

(b) Distress. Soil that is in a condition where a cave-in is imminent or is likely to occur. Distress is evidenced by such phenomena as the development of fissures in the face of or adjacent to an open excavation; the subsidence of the edge of an excavation; the slumping of material from the face or the bulging or heaving of material from the bottom of an excavation; the spalling of material from the face of an excavation; and ravelling, i.e., small amounts of material such as pebbles or little clumps of material suddenly separating from the face of an excavation and trickling or rolling down into the excavation.

(c) Maximum allowable slope. The steepest incline of an excavation face that is acceptable for the most favorable site conditions as protection against cave-ins, and is expressed as the ratio of horizontal distance to vertical rise (H:V).

(3) Requirements.

(a) Soil classification. Soil and rock deposits shall be classified in accordance with appendix A of this Part.

(b) Maximum allowable slope. The maximum allowable slope for a soil or rock deposit shall be determined from Table N-1 of this appendix.

(c) Actual slope.

(i) The actual slope shall not be steeper than the maximum allowable slope.

(ii) The actual slope shall be less steep than the maximum allowable slope, when there are signs of distress. If that situation occurs, the slope shall be cut back to an actual slope which is at least 1/2 horizontal to one vertical (1/2H:1V) less steep than the maximum allowable slope.

(iii) When surcharge loads from stored material or equipment, operating equipment, or traffic are present, a competent person shall determine the degree to which the actual slope must be reduced below the maximum allowable slope, and shall assure that such reduction is achieved. Surcharge loads from adjacent structures shall be evaluated in accordance with WAC 296-155-655(9).

(d) Configurations. Configurations of sloping and benching systems shall be in accordance with Figures N-1 through N-18.

TABLE N-1
MAXIMUM ALLOWABLE SLOPES

SOIL OR ROCK TYPE	MAXIMUM ALLOWABLE SLOPES (H_1V) (1) FOR EXCAVATION LESS THAN 20 FEET DEEP (2)
STABLE ROCK	VERTICAL (90°)
TYPE A	3/4: 1 (53°)
TYPE B	1: 1 (45°)
TYPE C	1 1/2: 1 (34°)

Notes: (1) Numbers shown in parentheses next to maximum allowable slopes are angles expressed in degrees from the horizontal. Angles have been rounded off.
(2) Sloping or benching for excavations greater than 20 feet deep shall be designed by a registered professional engineer.

Figure N-1
Slope Configurations for Type A Soil

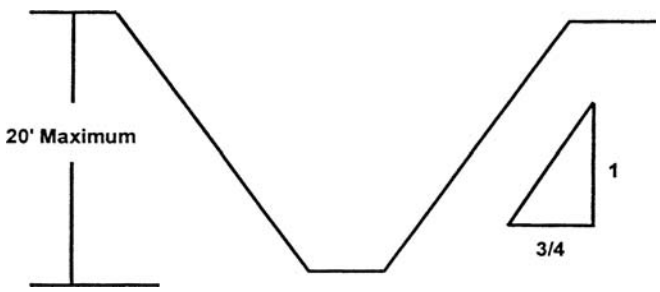

Simple Slope - General

All simple slope excavations 20 feet or less in depth shall have a maximum allowable slope of 3/4:1.

Figure N-2
Slope Configurations for Type A Soil

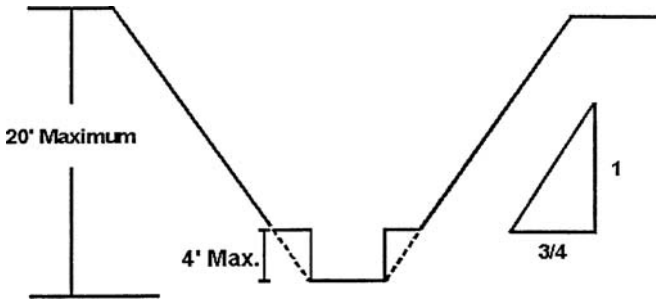

Simple Bench

All benched excavations 20 feet or less in depth shall have a maximum allowable slope of 3/4:1 and maximum bench dimensions of 4 feet.

Figure N-3
Slope Configurations for Type A Soil

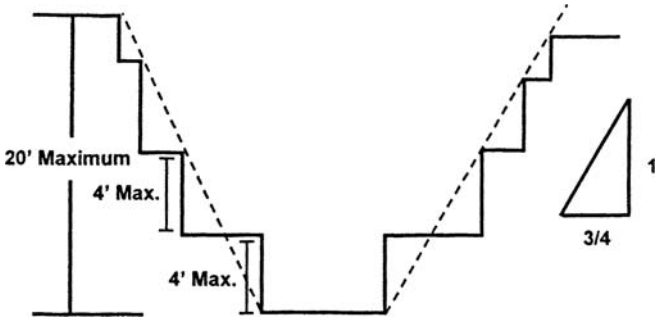

Multiple Bench

All benched excavations 20 feet or less in depth shall have a maximum allowable slope of 3/4:1 and maximum bench dimensions of 4 feet.

Figure N-4
Slope Configurations for Type A Soil

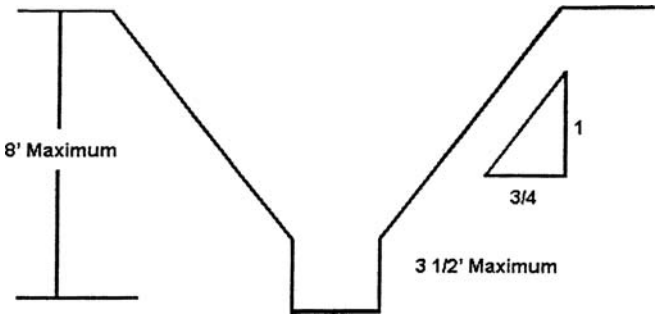

Unsupported Vertically Sided Lower Portion Maximum 8 Feet in Depth

All excavations 8 feet or less in depth which have unsupported vertically sided lower portions shall have a maximum vertical side of 3 1/2 feet.

Figure N-5
Slope Configurations for Type A Soil

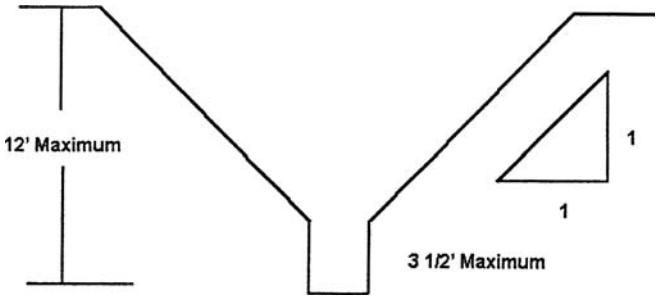

Unsupported Vertically Sided Lower Portion Maximum 12 Feet in Depth

All excavations more than 8 feet but not more than 12 feet in depth which have unsupported vertically sided lower portions shall have a maximum allowable slope of 1:1 and vertical side of 3 1/2 feet.

Figure N-6
Slope Configurations for Type A Soil
Support or Shield System

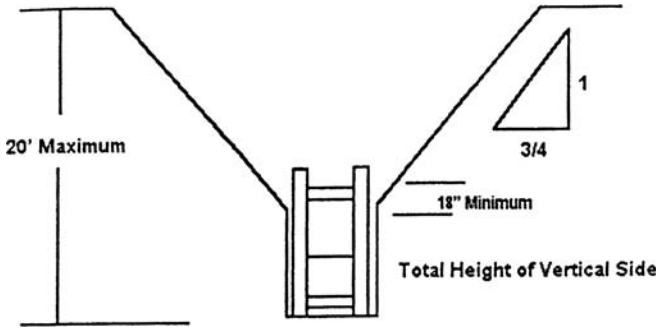

Unsupported Vertically Sided Lower Portion Maximum 20 Feet in Depth

All excavations 20 feet or less in depth which have vertically sided lower portions that are supported or shielded shall have a maximum allowable slope of 3/4:1. The support shield system must extend at least 18 inches above the top of the vertical side. All other simple slope, compound slope and vertically sided lower portion excavations shall be in accordance with options permitted under WAC 296-155-657(2).

Figure N-7
Slope Configurations for Type B Soil

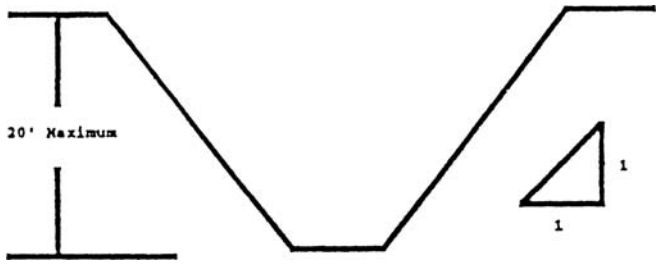

Simple Slope

All simple slope excavations 20 feet or less in depth shall have a maximum allowable slope of 1:1

Figure N-8
Slope Configurations for Type B Soil
This bench allowed in cohesive soil only.

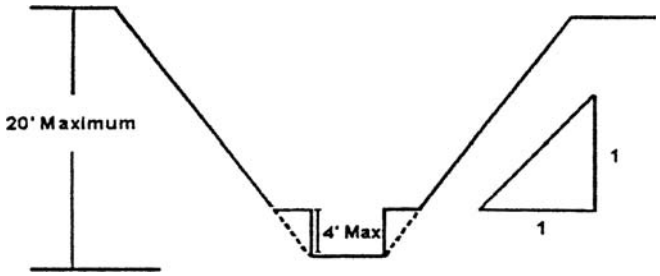

Single Bench

All excavations 20 feet or less in depth shall have a maximum allowable slope of 1:1 and maximum bench dimensions of 4 feet.

Figure N-9
Slope Configurations for Type B Soil
This bench allowed in cohesive soil only.

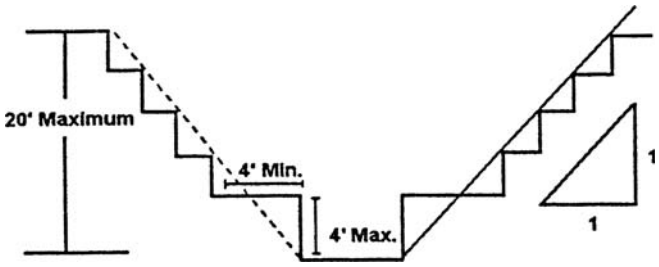

Multiple Bench

All excavations 20 feet or less in depth shall have a maximum allowable slope of 1:1 and maximum bench dimensions of 4 feet.

Figure N-10
Slope Configurations for Type B Soil
Support or Shield System

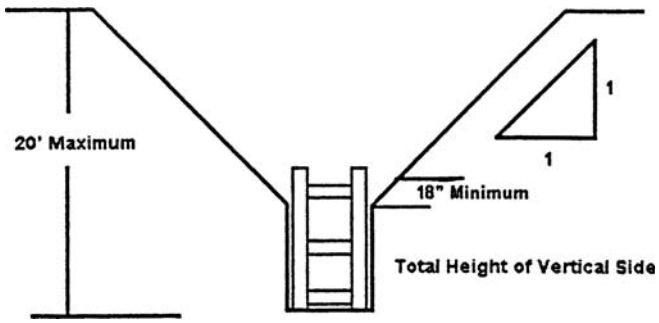

Vertically Sided Lower Portion

All excavations 20 feet or less in depth which have vertically sided lower portions shall be shielded or supported to a height at least 18 inches above the top of the vertical side. All such excavations shall have a maximum allowable slope of 1:1. All other simple slope, compounded slope and vertically sided lower portion excavations shall be in accordance with options permitted under WAC 296-155-657(2).

Figure N-11
Simple Configurations for Type C Soil

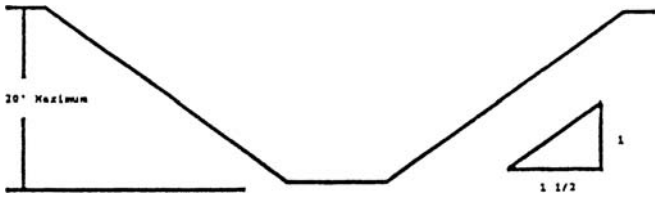

Simple Slope

All simple slope excavations 20 feet or less in depth shall have a maximum allowable slope of 1 1/2:1.

Figure N-12
Slope
Configurations for Type C Soil
Support or Shield System

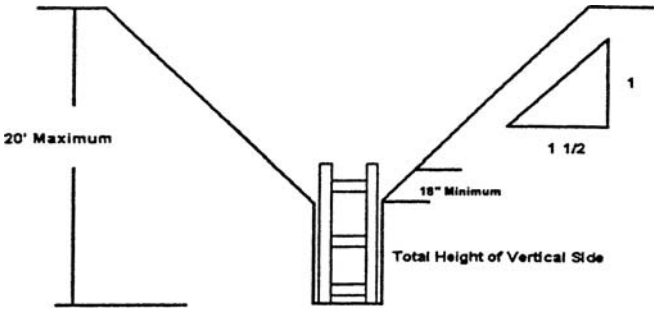

Vertically Sided Lower Portion

All excavations 20 feet or less in depth which have vertically sided lower portions shall be shielded or supported to a height at least 18 inches above the top of the vertical side. All such excavations shall have a maximum allowable slope of 1 1/2:1. All other simple slope, compound slope and vertically sided lower portion excavations shall be in accordance with options permitted under RCW WAC 296-155-657(2).

Figure N-13
EXCAVATIONS MADE IN LAYERED SOILS

All excavations 20 feet or less in depth made in layered soils shall have a maximum allowable slope for each layer as set forth below.

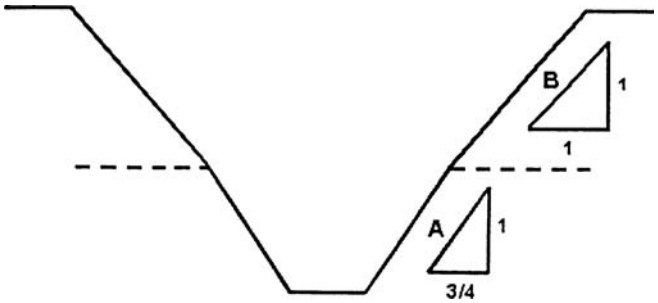

B OVER A

Figure N-14

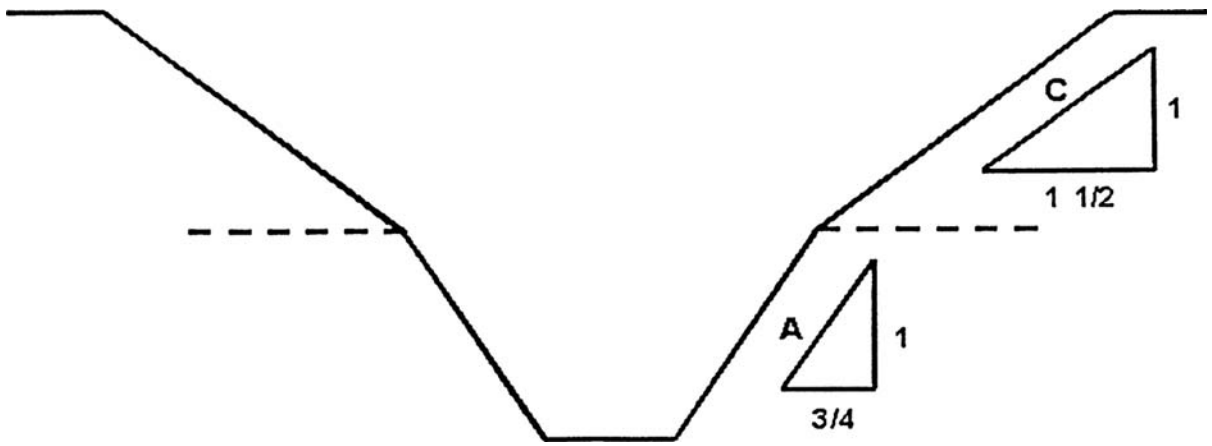

C OVER A

Figure N-15

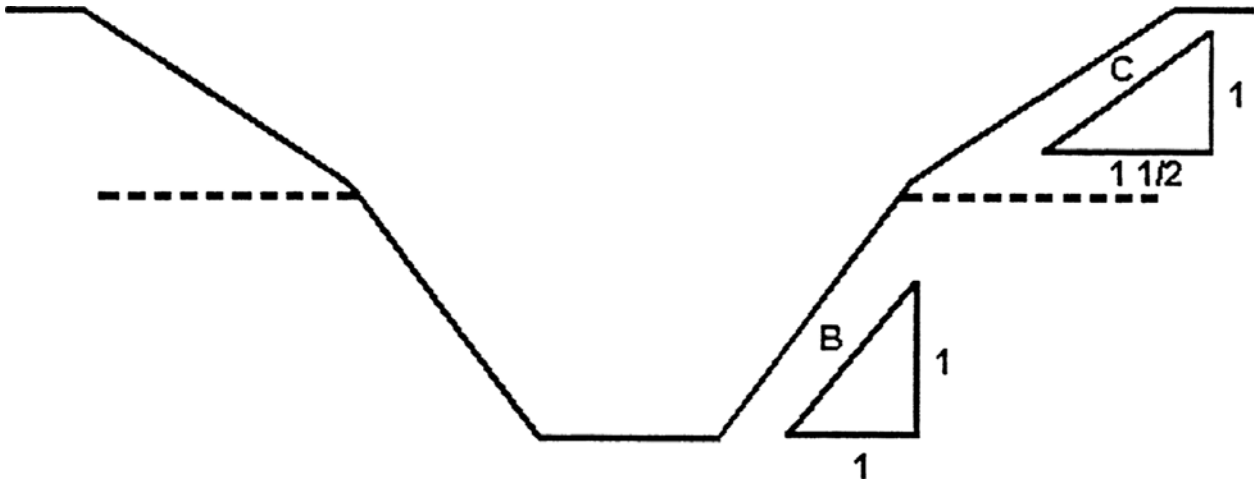

C OVER B

Figure N-16

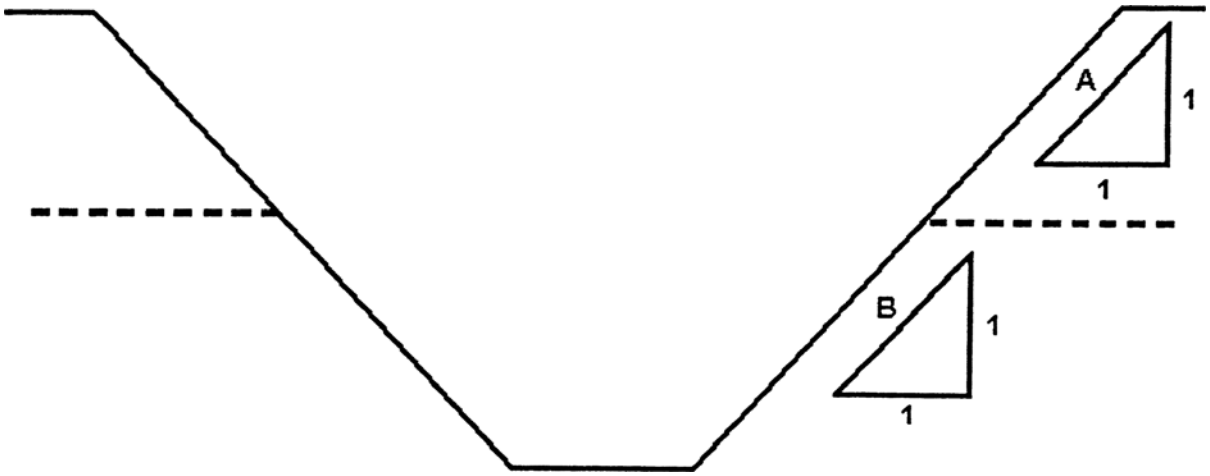

A OVER B

Figure N-17

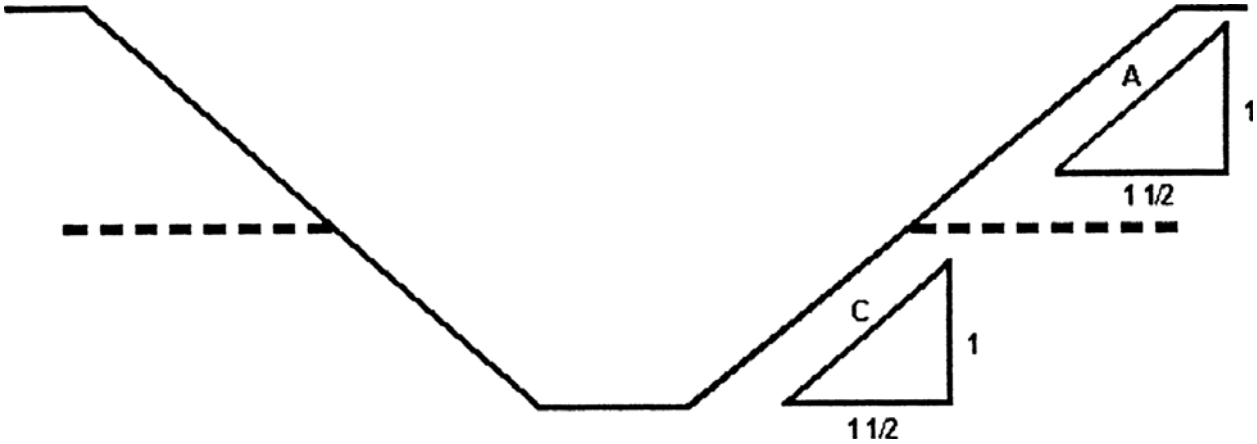

A OVER C

Figure N-18

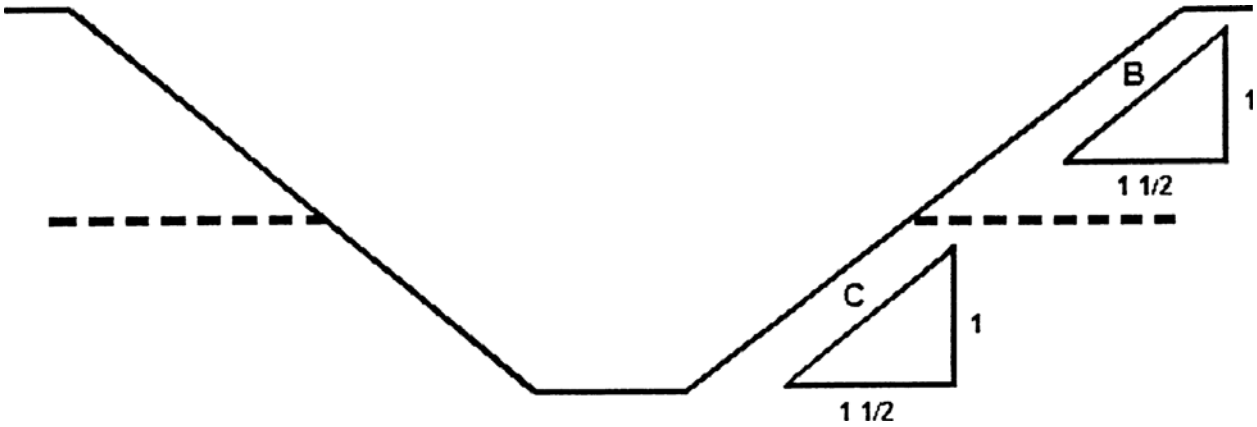

B OVER C

[Statutory Authority: RCW 49.17.010, [49.17].040 and [49.17].050. WSR 99-17-094, § 296-155-66403, filed 8/17/99, effective 12/1/99. Statutory Authority: Chapter 49.17 RCW and RCW 49.17.040, [49.17].050 and [49.17].060. WSR 92-22-067 (Order 92-06), § 296-155-66403, filed 10/30/92, effective 12/8/92.]

WAC 296-155-66405 Appendix C—Timber shoring for trenches. (1) Scope. This appendix contains information that can be used when timber shoring is provided as a method of protection from cave-ins in trenches that do not exceed 20 feet (6.1 m) in depth. This appendix must be used when design of timber shoring protective systems is to be performed in accordance with WAC 296-155-657 (3)(a). Other timber shoring configurations; other systems of support such as hydraulic and pneumatic systems; and other protective systems such as sloping, benching, shielding, and freezing systems must be designed in accordance with the requirements set forth in WAC 296-155-657 (2) and (3).

(2) Soil classification. In order to use the data presented in this appendix, the soil type or types in which the excavation is made must first be determined using the soil classification method set forth in appendix A of this part.

(3) Presentation of information. Information is presented in several forms as follows:

(a) Information is presented in tabular form in Tables N-2 through N-7 following subsection (7) of this appendix. Each table presents the minimum sizes of timber members to use in a shoring system, and each table contains data only for the particular soil type in which the excavation or portion of the excavation is made. The data are arranged to allow the user the flexibility to select from among several acceptable configurations of members based on varying the horizontal spacing of the crossbraces. Stable rock is exempt from shoring requirements and therefore, no data are presented for this condition.

(b) Information concerning the basis of the tabular data and the limitations of the data is presented in subsection (4) of this appendix, and on the tables themselves.

(c) Information explaining the use of the tabular data is presented in subsection (5) of this appendix.

(d) Information illustrating the use of the tabular data is presented in subsection (6) of this appendix.

(e) Miscellaneous notations regarding Tables N-2 through N-7 are presented in subsection (7) of this Appendix.

(4) Basis and limitations of the data.

(a) Dimensions of timber members.

(i) The sizes of the timber members listed in Tables N-2 through N-7 are taken from the National Bureau of Standards (NBS) report, "Recommended Technical Provisions for Construction Practice in Shoring and Sloping of Trenches and Excavations." In addition, where NBS did not recommend specific sizes of members, member sizes are based on an analysis of the sizes required for use by existing codes and on empirical practice.

(ii) The required dimensions of the members listed in Tables N-2, N-3, and N-4 refer to actual dimensions and not nominal dimensions of the timber. Employers wanting to use nominal size shoring are directed to Tables N-5, N-6, and N-7, or have this choice under WAC 296-155-657 (3)(c), and are referred to The Corps of Engineers, The Bureau of Reclamation or data from other acceptable sources.

(b) Limitation of application.

(i) It is not intended that the timber shoring specification apply to every situation that may be experienced in the field. These data were developed to apply to the situations that are most commonly experienced in current trenching practice. Shoring systems for use in situations that are not covered by the data in this appendix must be designed as specified in WAC 296-155-657(3).

(ii) When any of the following conditions are present, the members specified in the tables are not considered adequate. Either an alternate timber shoring system must be designed or another type of protective system designed in accordance with WAC 296-155-657.

(A) When loads imposed by structures or by stored material adjacent to the trench weigh in excess of the load imposed by a two-foot soil surcharge. The term "adjacent" as used here means the area within a horizontal distance from the edge of the trench equal to the depth of the trench.

(B) When vertical loads imposed on cross braces exceed a 240-pound gravity load distributed on a one-foot section of the center of the crossbrace.

(C) When surcharge loads are present from equipment weighing in excess of 20,000 pounds.

(D) When only the lower portion of a trench is shored and the remaining portion of the trench is sloped or benched unless: The sloped portion is sloped at an angle less steep than three horizontal to one vertical; or the members are selected from the tables for use at a depth which is determined from the top of the overall trench, and not from the toe of the sloped portion.

(5) Use of Tables. The members of the shoring system that are to be selected using this information are the cross braces, the uprights, and the wales, where wales are required. Minimum sizes of members are specified for use in different types of soil. There are six tables of information, two for each soil type. The soil type must first be determined in accordance with the soil classification system described in appendix A of this Part. Using the appropriate table, the selection of the size and spacing of the members is then made. The selection is based on the depth and width of the trench where the members are to be installed and, in most instances, the selection is also based on the horizontal spacing of the crossbraces. Instances where a choice of horizontal spacing of crossbracing is available, the horizontal spacing of the crossbraces must be chosen by the user before the size of any member can be determined. When the soil type, the width and depth of the trench, and the horizontal spacing of the crossbraces are known, the size and vertical spacing of the crossbraces, the size and vertical spacing of the wales, and the size and horizontal spacing of the uprights can be read from the appropriate table.

(6) Examples to illustrate the use of Tables N-2 through N-4.

(a) Example 1.

A trench dug in Type A soil is 13 feet deep and five feet wide.

From Table N-2, for acceptable arrangements of timber can be used.

Arrangement #1

Space 4x4 crossbraces at six feet horizontally and four feet vertically.

Wales are not required.

Space 3x8 uprights at six feet horizontally. This arrangement is commonly called "skip shoring."

Arrangement #2

Space 4x6 crossbraces at eight feet horizontally and four feet vertically.

Space 8x8 wales at four feet vertically.

Space 2x6 uprights at four feet horizontally.

Arrangement #3

Space 6x6 crossbraces at 10 feet horizontally and four feet vertically.

Space 8x10 wales at four feet vertically.

Space 2x6 uprights at five feet horizontally.

Arrangement #4

Space 6x6 crossbraces at 12 feet horizontally and four feet vertically.

Space 10x10 wales at four feet vertically.

Space 3x8 uprights at six feet horizontally.

(b) Example 2.

A trench dug in Type B soil in 13 feet deep and five feet wide.

From Table N-3 three acceptable arrangements of members are listed.

Arrangement #1

Space 6x6 crossbraces at six feet horizontally and five feet vertically.

Space 8x8 wales at five feet vertically.

Space 2x6 uprights at two feet horizontally.

Arrangement #2

Space 6x8 crossbraces at eight feet horizontally and five feet vertically.

Space 10x10 wales at five feet vertically.

Space 2x6 uprights at two feet horizontally.

Arrangement #3

Space 8x8 crossbraces at 10 feet horizontally and five feet vertically.

Space 10x12 wales at five feet vertically.

Space 2x6 uprights at two feet vertically.

(c) Example 3.

A trench dug Type C soil is 13 feet deep and five feet wide.

From Table N-4 two acceptable arrangements of members can be used.

Arrangement #1

Space 8x8 crossbraces at six feet horizontally and five feet vertically.

Space 10x12 wales at five feet vertically.

Position 2x6 uprights as closely together as possible.

If water must be retained use special tongue and groove uprights to form tight sheeting.

Arrangement #2

Space 8x10 crossbraces at eight feet horizontally and five feet vertically.

Space 12x12 wales at five feet vertically.

Position 2x6 uprights in a close sheeting configuration unless water pressure must be resisted. Tight sheeting must be used where water must be retained.

(d) Example 4.

A trench dug in Type C soil is 20 feet deep and 11 feet wide. The size and spacing of members for the section of trench that is over 15 feet in depth is determined using Table N-4. Only one arrangement of members is provided.

Space 8x10 crossbraces at six feet horizontally and five feet vertically.

Space 12x12 wales at five feet vertically.

Use 3x6 tight sheeting.

Use of Tables N-5, N-6, and N-7 would follow the same procedures.

(7) Notes for all tables.

(a) Member sizes at spacings other than indicated are to be determined as specified in WAC 296-155-657(3). "Design of Protective Systems."

(b) When conditions are saturated or submerged use Tight Sheeting. Tight Sheeting refers to the use of specially-edged timber planks (e.g., tongue and groove) at least three inches thick, steel sheet piling, or similar construction that when driven or placed in position provide a tight wall to resist the lateral pressure of water and to prevent the loss of backfill material. Close Sheeting refers to the placement of planks side-by-side allowing as little space as possible between them.

(c) All spacing indicated is measured center to center.

(d) Wales to be installed with greater dimension horizontal.

(e) If the vertical distance from the center of the lowest crossbrace to the bottom of the trench exceeds two and one-half feet, uprights shall be firmly embedded or a mudsill shall be used. Where uprights are embedded, the vertical distance from the center of the lowest crossbrace to the bottom of the trench shall not exceed 36 inches. When mudsills are used, the vertical distance shall not exceed 42 inches. Mudsills are wales that are installed at the toe of the trench side.

(f) Trench jacks may be used in lieu of or in combination with timber crossbraces.

(g) Placement of crossbraces. When the vertical spacing of crossbraces is four feet, place the top crossbrace no more than two feet below the top of the trench. When the vertical spacing of crossbraces is five feet, place the top crossbrace no more than 2.5 feet below the top of the trench.

TABLE N-2
TIMBER TRENCH SHORING — MINIMUM TIMBER REQUIREMENTS*
SOIL TYPE A P_a - 25 X H + 72 psf (2 ft. Surcharge)

DEPTH OF TRENCH (FEET)	SIZE (ACTUAL) AND SPACING OF MEMBERS **													
	CROSS BRACES							WALES		UPRIGHTS				
	HORIZ. SPACING (FEET)	WIDTH OF TRENCH (FEET)					VERT. SPACING (FEET)	SIZE (IN.)	VERT. SPACING (FEET)	MAXIMUM ALLOWABLE HORIZONTAL SPACING (FEET)				
		UP TO 4	UP TO 6	UP TO 9	UP TO 12	UP TO 15				CLOSE	4	5	6	8
4 TO 10	UP TO 6	4 X 4	4 X 4	4 X 6	6 X 6	6 X 6	4	Not Req'd	---				2 X 6	
	UP TO 8	4 X 4	4 X 4	4 X 6	6 X 6	6 X 6	4	Not Req'd	---					2 X 8
	UP TO 10	4 X 6	4 X 6	4 X 6	6 X 6	6 X 6	4	8 X 8	4			2 X 6		
	UP TO 12	4 X 6	4 X 6	6 X 6	6 X 6	6 X 6	4	8 X 8	4				2 X 6	
10 TO 15	UP TO 6	4 X 4	4 X 4	4 X 6	6 X 6	6 X 6	4	Not Req'd	---				3 X 8	
	UP TO 8	4 X 6	4 X 6	6 X 6	6 X 6	6 X 6	4	8 X 8	4		2 X 6			
	UP TO 10	6 X 6	6 X 5	6 X 6	6 X 8	6 X 8	4	8 X 10	4			2 X 6		
	UP TO 12	6 X 6	6 X 6	6 X 6	6 X 8	6 X 8	4	10 X 10	4				3 X 8	
15 TO 20	UP TO 6	6 X 6	6 X 6	6 X 6	6 X 8	6 X 8	4	6 X 8	4	3 X 6				
	UP TO 8	6 X 6	6 X 6	6 X 6	6 X 8	6 X 8	4	8 X 8	4	3 X 6				
	UP TO 10	8 X 8	8 X 8	8 X 8	8 X 8	8 X 10	4	8 X 10	4	3 X 6				
	UP TO 12	8 X 8	8 X 8	8 X 8	8 X 8	8 X 10	4	10 X 10	4	3 X 6				
OVER 20	SEE NOTE 1													

* Mixed oak or equivalent with a bending strength not less than 850 psi.

** Manufactured members of equivalent strength may be substituted for wood.

TABLE N-3
TIMBER TRENCH SHORING — MINIMUM TIMBER REQUIREMENTS*
SOIL TYPE B P_a - 45 X H + 72 psf (2 ft. Surcharge)

DEPTH OF TRENCH (FEET)	SIZE (ACTUAL) AND SPACING OF MEMBERS **													
	CROSS BRACES							WALES		UPRIGHTS				
	HORIZ. SPACING (FEET)	WIDTH OF TRENCH (FEET)					VERT. SPACING (FEET)	SIZE (IN.)	VERT. SPACING (FEET)	MAXIMUM ALLOWABLE HORIZONTAL SPACING (FEET)				
		UP TO 4	UP TO 6	UP TO 9	UP TO 12	UP TO 15				CLOSE	2	3		
4 TO 10	UP TO 6	4 X 6	4 X 6	6 X 6	6 X 6	6 X 6	5	6 X 8	5			2 X 6		
	UP TO 8	6 X 6	6 X 6	6 X 6	6 X 8	6 X 8	5	8 X 10	5			2 X 6		
	UP TO 10	6 X 6	6 X 6	6 X 6	6 X 8	6 X 8	5	10 X 10	5			2 X 6		
	See Note 1													
10 TO 15	UP TO 6	6 X 6	6 X 6	6 X 6	6 X 8	6 X 8	5	8 X 8	5		2 X 6			
	UP TO 8	6 X 8	6 X 8	6 X 8	8 X 8	8 X 8	5	10 X 10	5		2 X 6			
	UP TO 10	8 X 8	8 X 8	8 X 8	8 X 8	8 X 10	5	10 X 12	5		2 X 6			
	See Note 1													
15 TO 20	UP TO 6	6 X 8	6 X 8	6 X 8	8 X 8	8 X 8	5	8 X 10	5	3 X 6				
	UP TO 8	8 X 8	8 X 8	8 X 8	8 X 8	8 X 10	5	10 X 12	5	3 X 6				
	UP TO 10	8 X 10	8 X 10	8 X 10	8 X 10	10 X 10	5	12 X 12	5	3 X 6				
	See Note 1													
OVER 20	SEE NOTE 1													

* Mixed oak or equivalent with a bending strength not less than 850 psi.

** Manufactured members of equivalent strength may be substituted for wood.

TABLE N-4
TIMBER TRENCH SHORING — MINIMUM TIMBER REQUIREMENTS*
SOIL TYPE C P_a - 80 X H + 72 psf (2 ft. Surcharge)

DEPTH OF TRENCH (FEET)	SIZE (ACTUAL) AND SPACING OF MEMBERS **													
	CROSS BRACES							WALES		UPRIGHTS				
	HORIZ. SPACING (FEET)	WIDTH OF TRENCH (FEET)					VERT. SPACING (FEET)	SIZE (IN.)	VERT. SPACING (FEET)	MAXIMUM ALLOWABLE HORIZONTAL SPACING (FEET)				
		UP TO 4	UP TO 6	UP TO 9	UP TO 12	UP TO 15				CLOSE				
4 TO 10	UP TO 6	6 X 8	6 X 8	6 X 8	8 X 8	8 X 8	5	8 X 10	5	2 X 6				
	UP TO 8	8 X 8	8 X 8	8 X 8	8 X 8	8 X 10	5	10 X 12	5	2 X 6				
	UP TO 10	8 X 10	8 X 10	8 X 10	8 X 10	10 X 10	5	12 X 12	5	2 X 6				
	See Note 1													
10 TO 15	UP TO 6	8 X 8	8 X 8	8 X 8	8 X 8	8 X 10	5	10 X 12	5	2 X 6				
	UP TO 8	8 X 10	8 X 10	8 X 10	8 X 10	10 X 10	5	12 X 12	5	2 X 6				
	See Note 1													
	See Note 1													
15 TO 20	UP TO 6	8 X 10	8 X 10	8 X 10	8 X 10	10 X 10	5	12 X 12	5	3 X 6				
	See Note 1													
	See Note 1													
	See Note 1													
OVER 20	SEE NOTE 1													

* Mixed oak or equivalent with a bending strength not less than 850 psi.

** Manufactured members of equivalent strength may be substituted for wood.

TABLE N-5
TIMBER TRENCH SHORING — MINIMUM TIMBER REQUIREMENTS*
SOIL TYPE A P_a - 25 X H + 72 psf (2 ft. Surcharge)

DEPTH OF TRENCH (FEET)	SIZE (S4S) AND SPACING OF MEMBERS **													
	CROSS BRACES							WALES		UPRIGHTS				
	HORIZ. SPACING (FEET)	WIDTH OF TRENCH (FEET)					VERT. SPACING (FEET)	SIZE (IN.)	VERT. SPACING (FEET)	MAXIMUM ALLOWABLE HORIZONTAL SPACING (FEET)				
		UP TO 4	UP TO 6	UP TO 9	UP TO 12	UP TO 15				CLOSE	4	5	6	8
4 TO 10	UP TO 6	4 X 4	4 X 4	4 X 4	4 X 4	4 X 6	4	Not Req'd	Not Req'd				4 X 6	
	UP TO 8	4 X 4	4 X 4	4 X 4	4 X 6	4 X 6	4	Not Req'd	Not Req'd					4 X 8
	UP TO 10	4 X 6	4 X 6	4 X 6	6 X 6	6 X 6	4	8 X 8	4			4 X 6		
	UP TO 12	4 X 6	4 X 6	4 X 6	6 X 6	6 X 6	4	8 X 8	4				4 X 6	
10 TO 15	UP TO 6	4 X 4	4 X 4	4 X 4	6 X 6	6 X 6	4	Not Req'd	Not Req'd				4 X 10	
	UP TO 8	4 X 6	4 X 6	4 X 6	6 X 6	6 X 6	4	6 X 8	4		4 X 6			
	UP TO 10	6 X 6	6 X 6	6 X 6	6 X 6	6 X 6	4	8 X 8	4			4 X 8		
	UP TO 12	6 X 6	6 X 6	6 X 6	6 X 6	6 X 6	4	8 X 10	4		4 X 6		4 X 10	
15 TO 20	UP TO 6	6 X 6	6 X 6	6 X 6	6 X 6	6 X 6	4	6 X 8	4	3 X 6				
	UP TO 8	6 X 6	6 X 6	6 X 6	6 X 6	6 X 6	4	8 X 8	4	3 X 6	4 X 12			
	UP TO 10	6 X 6	6 X 6	6 X 6	6 X 6	6 X 8	4	8 X 10	4	3 X 6				
	UP TO 12	6 X 6	6 X 6	6 X 6	6 X 8	6 X 8	4	8 X 12	4	3 X 6	4 X 12			
OVER 20	SEE NOTE 1													

* Douglas fir or equivalent with a bending strength not less than 1500 psi.

** Manufactured members of equivalent strength may be substituted for wood.

TABLE N-6
TIMBER TRENCH SHORING — MINIMUM TIMBER REQUIREMENTS*
SOIL TYPE B P_a - 45 X H + 72 psf (2 ft. Surcharge)

DEPTH OF TRENCH (FEET)	SIZE (S4S) AND SPACING OF MEMBERS **													
	CROSS BRACES							WALES		UPRIGHTS				
	HORIZ. SPACING (FEET)	WIDTH OF TRENCH (FEET)					VERT. SPACING (FEET)	SIZE (IN.)	VERT. SPACING (FEET)	MAXIMUM ALLOWABLE HORIZONTAL SPACING (FEET)				
		UP TO 4	UP TO 6	UP TO 9	UP TO 12	UP TO 15				CLOSE	2	3	4	6
4 TO 10	UP TO 6	4 X 6	4 X 6	4 X 6	6 X 6	6 X 6	5	6 X 8	5			3 X 12 4 X 8		4 X 12
	UP TO 8	4 X 6	4 X 6	6 X 6	6 X 6	6 X 6	5	8 X 8	5		3 X 8		4 X 8	
	UP TO 10	4 X 6	4 X 6	6 X 6	6 X 6	6 X 8	5	8 X 10	5			4 X 8		
	See Note 1													
10 TO 15	UP TO 6	6 X 6	6 X 6	6 X 6	6 X 8	6 X 8	5	8 X 8	5	3 X 6	4 X 10			
	UP TO 8	6 X 6	6 X 8	6 X 8	8 X 8	8 X 8	5	10 X 10	5	3 X 6	4 X 10			
	UP TO 10	6 X 8	6 X 8	8 X 8	8 X 8	8 X 8	5	10 X 12	5	3 X 6	4 X 10			
	See Note 1													
15 TO 20	UP TO 6	6 X 8	6 X 8	6 X 8	6 X 8	8 X 8	5	8 X 10	5	4 X 6				
	UP TO 8	6 X 8	6 X 8	6 X 8	8 X 8	8 X 8	5	10 X 12	5	4 X 6				
	UP TO 10	8 X 8	8 X 8	8 X 8	8 X 8	8 X 8	5	12 X 12	5	4 X 6				
	See Note 1													
OVER 20	SEE NOTE 1													

* Douglas fir or equivalent with a bending strength not less than 1500 psi.

** Manufactured members of equivalent strength may be substituted for wood.

TABLE N-7
TIMBER TRENCH SHORING — MINIMUM TIMBER REQUIREMENTS*
SOIL TYPE C P_a - 80 X H + 72 psf (2 ft. Surcharge)

DEPTH OF TRENCH (FEET)	SIZE (S4S) AND SPACING OF MEMBERS **													
	CROSS BRACES							WALES		UPRIGHTS				
	HORIZ. SPACING (FEET)	WIDTH OF TRENCH (FEET)					VERT. SPACING (FEET)	SIZE (IN.)	VERT. SPACING (FEET)	MAXIMUM ALLOWABLE HORIZONTAL SPACING (FEET)				
		UP TO 4	UP TO 6	UP TO 9	UP TO 12	UP TO 15				CLOSE				
4 TO 10	UP TO 6	6 X 6	6 X 6	6 X 6	6 X 6	8 X 8	5	8 X 8	5	3 X 6				
	UP TO 8	6 X 6	6 X 6	6 X 6	8 X 8	8 X 8	5	10 X 10	5	3 X 6				
	UP TO 10	6 X 6	6 X 6	8 X 8	8 X 8	8 X 8	5	10 X 12	5	3 X 6				
	See Note 1													
10 TO 15	UP TO 6	6 X 8	6 X 8	6 X 8	8 X 8	8 X 8	5	10 X 10	5	4 X 6				
	UP TO 8	8 X 8	8 X 8	8 X 8	8 X 8	8 X 8	5	12 X 12	5	4 X 6				
	See Note 1													
	See Note 1													
15 TO 20	UP TO 6	8 X 8	8 X 8	8 X 8	8 X 10	8 X 10	5	10 X 12	5	4 X 6				
	See Note 1													
	See Note 1													
	See Note 1													
OVER 20	SEE NOTE 1													

* Douglas fir or equivalent with a bending strength not less than 1500 psi.

** Manufactured members of equivalent strength may be substituted for wood.

[Statutory Authority: RCW 49.17.010, [49.17].040, [49.17].050. WSR 02-12-098, § 296-155-66405, filed 6/5/02, effective 8/1/02. Statutory Authority: Chapter 49.17 RCW and RCW 49.17.040, [49.17].050 and [49.17].060. WSR 92-22-067 (Order 92-06), § 296-155-66405, filed 10/30/92, effective 12/8/92.]

WAC 296-155-66407 Appendix D—Aluminum hydraulic shoring for trenches. (1) Scope. This appendix contains information that can be used when aluminum hydraulic shoring is provided as a method of protection against cave-ins in trenches that do not exceed 20 feet (6.1m) in depth. This appendix must be used when design of the aluminum hydraulic protective system cannot be performed in accordance with WAC 296-155-657 (3)(b).

(2) Soil Classification. In order to use data presented in this appendix, the soil type or types in which the excavation is made must first be determined using the soil classification method set forth in appendix A of this Part.

(3) Presentation of information. Information is presented in several forms as follows:

(a) Information is presented in tabular form in Tables N-8 through N-11. Each table presents the maximum vertical and horizontal spacings that may be used with various aluminum member sizes and various hydraulic cylinder sizes. Each table contains data only for the particular soil type in which the excavation or portion of the excavation is made. Tables N-8 and N-9 are for vertical shores in Types A and B soil. Tables N-10 and N-11 are for horizontal waler systems in Types B and C soil.

(b) Information concerning the basis of the tabular data and the limitations of the data is presented in subsection (4) of this appendix.

(c) Information explaining the use of the tabular data is presented in subsection (5) of this appendix.

(d) Information illustrating the use of the tabular data is presented in subsection (6) of this appendix.

(e) Miscellaneous notations (footnotes) regarding Table N-8 through N-11 are presented in subsection (7) of this appendix.

(f) Figures, illustrating typical installations of hydraulic shoring, are included just prior to the Tables. The illustrations page is entitled "Aluminum Hydraulic Shoring: Typical Installations."

(4) Basis and limitations of the data.

(a) Vertical shore rails and horizontal wales are those that meet the Section Modulus requirements in Tables N-8 through N-10. Aluminum material is 6061-T6 or material of equivalent strength and properties.

(b) Hydraulic cylinders specifications.

(i) 2-inch cylinders shall be a minimum 2-inch inside diameter with a minimum safe working capacity of no less than 18,000 pounds axial compressive load at maximum extension. Maximum extension is to include full range of cylinder extensions as recommended by product manufacturer.

(ii) 3-inch cylinders shall be a minimum 3-inch inside diameter with a safe working capacity of not less than 30,000 pounds axial compressive load at extensions as recommended by product manufacturer.

(c) Limitation of application.

(i) It is not intended that the aluminum hydraulic specification apply to every situation that may be experienced in the field. These data were developed to apply to the situations that are most commonly experienced in current trenching practice. Shoring systems for use in situations that are not covered by the data in this appendix must be otherwise designed as specified in WAC 296-155-657(3).

(ii) When any of the following conditions are present; the members specified in the Tables are not considered adequate. In this case, an alternative aluminum hydraulic shoring system or other type of protective system must be designed in accordance with WAC 296-155-657.

(A) When vertical loads imposed on cross braces exceed a 100 Pound gravity load distributed on a one foot section of the center of the hydraulic cylinder.

(B) When surcharge loads are present from equipment weighing in excess of 20,000 pounds.

(C) When only the lower portion of a trench is shored and the remaining portion of the trench is sloped or benched unless: The slope portion is sloped at an angle less steep than three horizontal to one vertical; or the members are selected from the tables for use at a depth which is determined from the top of the overall trench, and not from the toe of the sloped portion.

(5) Use of Tables N-8 through N-11. The members of the shoring system that are to be selected using this information are the hydraulic cylinders, and either the vertical shores or the horizontal wales. When a waler system is used the vertical timber sheeting to be used is also selected from these tables. The Tables N-8 and N-9 for vertical shores are used in Type A and B soils that do not require sheeting. Type B soils that may require sheeting, and Type C soils that always require sheeting are found in the horizontal wale Tables N-10 and N-11. The soil type must first be determined in accordance with the soil classification system described in appendix A of this Part. Using the appropriate table, the selection of the size and spacing of the members is made. The selection is based on the depth and width of the trench where the members are to be installed. In these tables the vertical spacing is held constant at four feet on center. The tables show the maximum horizontal spacing of cylinders allowed for each size of wale in the waler system tables, and in the vertical shore tables, the hydraulic cylinder horizontal spacing is the same as the vertical shore spacing.

(6) Example to Illustrate the Use of the Tables:

(a) Example 1: A trench dug in Type A soil is 6 feet deep and 3 feet wide. From Table N-8: Find vertical shores and 2 inch diameter cylinders spaced 8 feet on center (o.c.) horizontally and 4 feet on center (o.c.) vertically. (See Figures N-23 & N-25 for typical installations.)

(b) Example 2: A trench is dug in Type B soil that does not require sheeting, 13 feet deep and 5 feet wide. From Table N-9: Find vertical shores and 2 inch diameter cylinders spaced 6.5 feet o.c. horizontally and 4 feet o.c. vertically. (See Figures N-23 & N-25 for typical installations.)

(c) A trench is dug in Type B soil that does not require sheeting, but does experience some minor raveling of the trench face. The trench is 16 feet deep and 9 feet wide. From Table N-9: Find vertical shores and 2 inch diameter cylinder (with special oversleeves as designated by subdivision (7)(b)) spaced 5.5 feet o.c. horizontally and 4 feet o.c. vertically, plywood (per subdivision (7)(g) to the N-8 through N-11 Tables) should be used behind the shores. (See Figures N-24 & N-25 for typical installations.)

(d) Example 4: A trench is dug in previously disturbed Type B soil, with characteristics of a Type C soil, and will require sheeting. The trench is 18 feet deep and 12 feet wide. 8 foot horizontal spacing between cylinders is desired for working space. From Table N-10: Find horizontal wale with a section modulus of 14.0 spaced at 4 feet o.c. vertically and 3 inch diameter cylinder spaced at 9 feet maximum o.c. horizontally, 3x12 timber sheeting is required at close spacing vertically. (See Figure N-26 for typical installation.)

(e) Example 5: A trench is dug in Type C soil, 9 feet deep and 4 feet wide. Horizontal cylinder spacing in excess of 6 feet is desired for working space. From Table N-11: Find horizontal wale with a section modulus of 7.0 and 2 inch diameter cylinders spaced at 6.5 feet o.c. horizontally. Or, find horizontal wale with a 14.0 section modulus and 3 inch diameter cylinder spaced at 10 feet o.c. horizontally. Both wales are spaced 4 feet o.c. vertically. 3x12 timber sheeting is required at close spacing vertically. (See Figure N-26 for typical installation.)

(7) Footnotes, and general notes, for Tables N-8 through N-11.

(a) For applications other than those listed in the tables, refer to WAC 296-155-657 (3)(b) for use of manufacturer's tabulated data. For trench depths in excess of 20 feet, refer to WAC 296-155-657 (3)(b) and (c).

(b) 2-inch diameter cylinders, at this width, shall have structural steel tube (3.5x3.5x0.1875) oversleeves, or structural oversleeves of manufacturer's specification, extending the full, collapsed length.

(c) Hydraulic cylinders capacities.

(i) 2-inch cylinders shall be a minimum 2-inch inside diameter with a safe working capacity of not less than 18,000 pounds axial compressive load at maximum extension. Maximum extension is to include full range of cylinder extensions as recommended by product manufacturer.

(ii) 3-inch cylinders shall be a minimum 3-inch inside diameter with a safe work capacity of not less than 30,000 pounds axial compressive load at maximum extension. Maximum extension is to include full range of cylinder extensions as recommended by product manufacturer.

(d) All spacing indicated is measured center to center.

(e) Vertical shoring rails shall have a minimum section modulus of 0.40 inch.

(f) When vertical shores are used, there must be a minimum of three shores spaced equally, horizontally, in a group.

(g) Plywood shall be 1.125 in. thick softwood or 0.75 inch thick, 14 ply, arctic white birch (Finland form).

Please note that plywood is not intended as a structural member, but only for prevention of local raveling (sloughing of the trench face) between shores.

(h) See appendix C for timber specifications.

(i) Wales are calculated for simple span conditions.

(j) See subsection (4) of this appendix, for basis and limitations of the data.

ALUMINUM HYDRAULIC SHORING
TYPICAL INSTALLATIONS

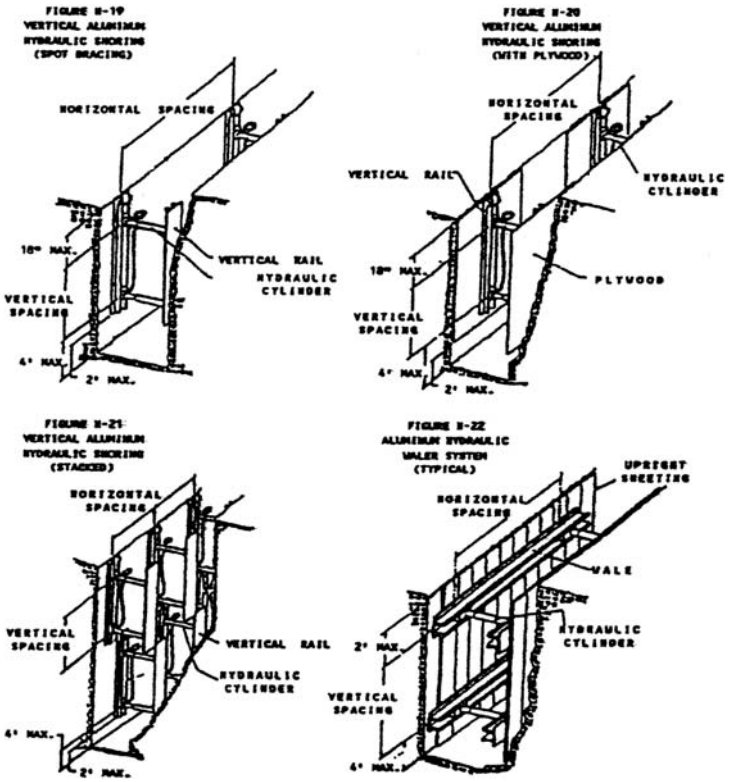

TABLE N-8
ALUMINUM HYDRAULIC SHORING
VERTICAL SHORES FOR SOIL *TYPE A*

Depth of Trench (Feet)	Hydraulic Cylinders				
	Maximum Horizontal Spacing (Feet)	Maximum Vertical Spacing (Feet)	Width of Trench (Feet)		
			Up to 8	Over 8 Up to 12	Over 12 Up to 15
Over 4 Up to 10	8	4	2 INCH DIAMETER	2 INCH DIAMETER NOTE (2)	3 INCH DIAMETER
Over 10 Up to 15	8				
Over 15 Up to 20	7				
Over 20	NOTE (1)				

Footnotes to tables, and general notes on hydraulic shoring, are found in Appendix D, WAC 296-155-66407(7)

Note (1): See Appendix D, WAC 296-155-66407 (7)(a)

Note (2): See Appendix D, WAC 296-155-66407 (7)(b)

TABLE N-9
ALUMINUM HYDRAULIC SHORING
VERTICAL SHORES FOR SOIL *TYPE B*

Depth of Trench (Feet)	Hydraulic Cylinders				
	Maximum Horizontal Spacing (Feet)	Maximum Vertical Spacing (Feet)	Width of Trench (Feet)		
			Up to 8	Over 8 Up to 12	Over 12 Up to 15
Over 4 Up to 10	8	4	2 INCH DIAMETER	2 INCH DIAMETER NOTE (2)	3 INCH DIAMETER
Over 10 Up to 15	6.5				
Over 15 Up to 20	5.5				
Over 20	NOTE (1)				

Footnotes to tables, and general notes on hydraulic shoring, are found in Appendix D, WAC 296-155-66407(7

Note (1): See Appendix D, WAC 296-155-66407 (7)(a)

Note (2): See Appendix D, WAC 296-155-66407 (7)(b)

TABLE N-10
ALUMINUM HYDRAULIC SHORING
WALER SYSTEMS FOR SOIL *TYPE B*

Depth of Trench (Feet)	Wales		Hydraulic Cylinders						Timber Uprights		
			Width of Trench (Feet)						Max. Horizontal Spacing (on Center)		
			Up to 8		Over 8 Up to 12		Over 12 Up to 15				
	Vertical Spacing (Feet)	Section* Modulus (In^3)	Horiz. Spacing	Cylinder Diameter	Horiz. Spacing	Cylinder Diameter	Horiz. Spacing	Cylinder Diameter	Solid Sheet	2 Feet	3 Feet
Over 4 Up to 10	4	3.5	8.0	2 IN	8.0	2 IN Note (3)	8.0	3 IN	—	—	3 X 12
		7.0	9.0	2 IN	9.0	2 IN Note (3)	9.0	3 IN			
		14.0	12.0	3 IN	12.0	3 IN	12.0	3 IN			
Over 10 Up to 15	4	3.5	6.0	2 IN	6.0	2 IN Note (3)	6.0	3 IN	—	3 X 12	—
		7.0	8.0	3 IN	8.0	3 IN	8.0	3 IN			
		14.0	10.0	3 IN	10.0	3 IN	10.0	3 IN			
Over 15 Up to 20	4	3.5	5.5	2 IN	5.5	2 IN Note (3)	5.5	3 IN	3 X 12	—	—
		7.0	6.0	3 IN	6.0	3 IN	6.0	3 IN			
		14.0	9.0	3 IN	9.0	3 IN	9.0	3 IN			
Over 20	NOTE (1)										

Footnotes to tables, and general notes on hydraulic shoring, are found in Appendix D, WAC 296-155-66407(7

Note (1): See Appendix D, WAC 296-155-67640 (7)(a)

Note (2): See Appendix D, WAC 296-155-66407 (7)(b)

*Consult product manufacturer and/or qualified engineer for Section Modulus of available wales.

TABLE N-11
ALUMINUM HYDRAULIC SHORING
WALER SYSTEMS FOR SOIL *TYPE C*

Depth of Trench (Feet)	Wales		Hydraulic Cylinders						Timber Uprights		
			Width of Trench (Feet)						Max. Horizontal Spacing (on center)		
			Up to 8		Over 8 Up to 12		Over 12 Up to 15				
	Vertical Spacing (Feet)	Section* Modulus (In³)	Horiz. Spacing	Cylinder Diameter	Horiz. Spacing	Cylinder Diameter	Horiz. Spacing	Cylinder Diameter	Solid Sheet	2 Feet	3 Feet
Over 4 Up to 10	4	3.5	6.0	2 IN	6.0	2 IN Note (2)	6.0	3 IN	3 X 12	—	—
		7.0	6.5	2 IN	6.5	2 IN Note (2)	6.5	3 IN			
		14.0	10.0	3 IN	10.0	3 IN	10.0	3 IN			
Over 10 Up to 15	4	3.5	4.0	2 IN	4.0	2 IN Note (2)	4.0	3 IN	3 X 12	—	—
		7.0	5.5	3 IN	5.5	3 IN	5.5	3 IN			
		14.0	8.0	3 IN	8.0	3 IN	8.0	3 IN			
Over 15 Up to 20	4	3.5	3.5	2 IN	3.5	2 IN Note (2)	3.5	3 IN	3 X 12	—	—
		7.0	5.0	3 IN	5.0	3 IN	5.0	3 IN			
		14.0	6.0	3 IN	6.0	3 IN	6.0	3 IN			
Over 20	NOTE (1)										

Footnotes to tables, and general notes on hydraulic shoring, are found in Appendix D, WAC 296-155-66407(7

Note (1): See Appendix D, WAC 296-155-66407 (7)(a)

Note (2): See Appendix D, WAC 296-155-66407 (7)(b)

*Consult product manufacturer and/or qualified engineer for Section Modulus of available wales.

[Statutory Authority: Chapter 49.17 RCW and RCW 49.17.040, [49.17].050 and [49.17].060. WSR 92-22-067 (Order 92-06), § 296-155-66407, filed 10/30/92, effective 12/8/92.]

WAC 296-155-66409 Appendix E—Alternatives to timber shoring.

Appendix E to part N - Alternatives to Timber Shoring

Figure N-23, Aluminum Hydraulic Shoring

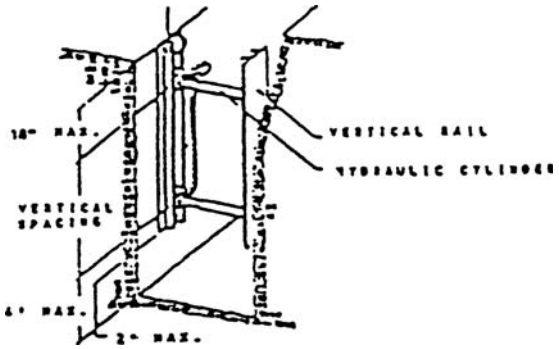

Figure N-24, Pneumatic/hydraulic Shoring

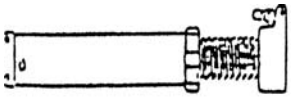

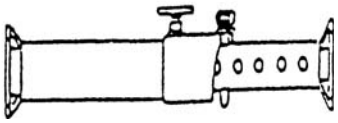

Figure N-25, Trench Jacks (Screw Jacks)

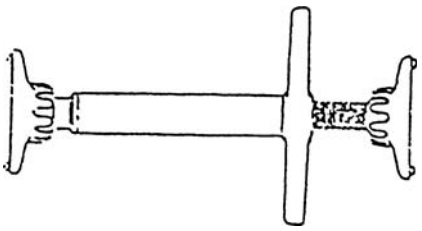

Figure N-26, Trench Shields

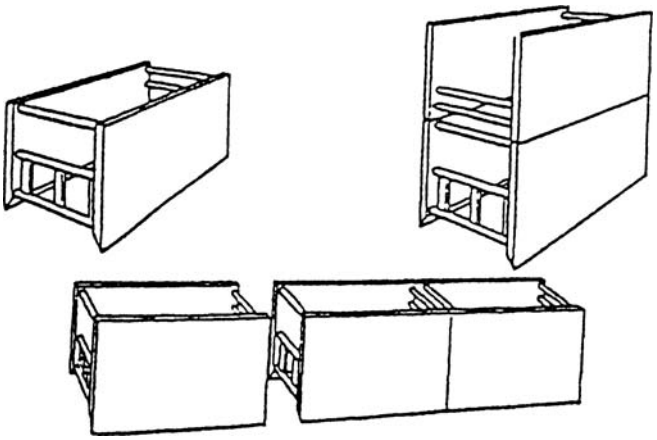

[Statutory Authority: Chapter 49.17 RCW and RCW 49.17.040, [49.17].050 and [49.17].060. WSR 92-22-067 (Order 92-06), § 296-155-66409, filed 10/30/92, effective 12/8/92.]

WAC 296-155-66411 Appendix F—Selection of protective systems. The following figures are a graphic summary of the requirements contained in Part N for excavations 20 feet or less in depth. Protective systems for use in excavations more than 20 feet in depth must be designed by a registered professional engineer in accordance with WAC 296-155-657 (2) and (3).

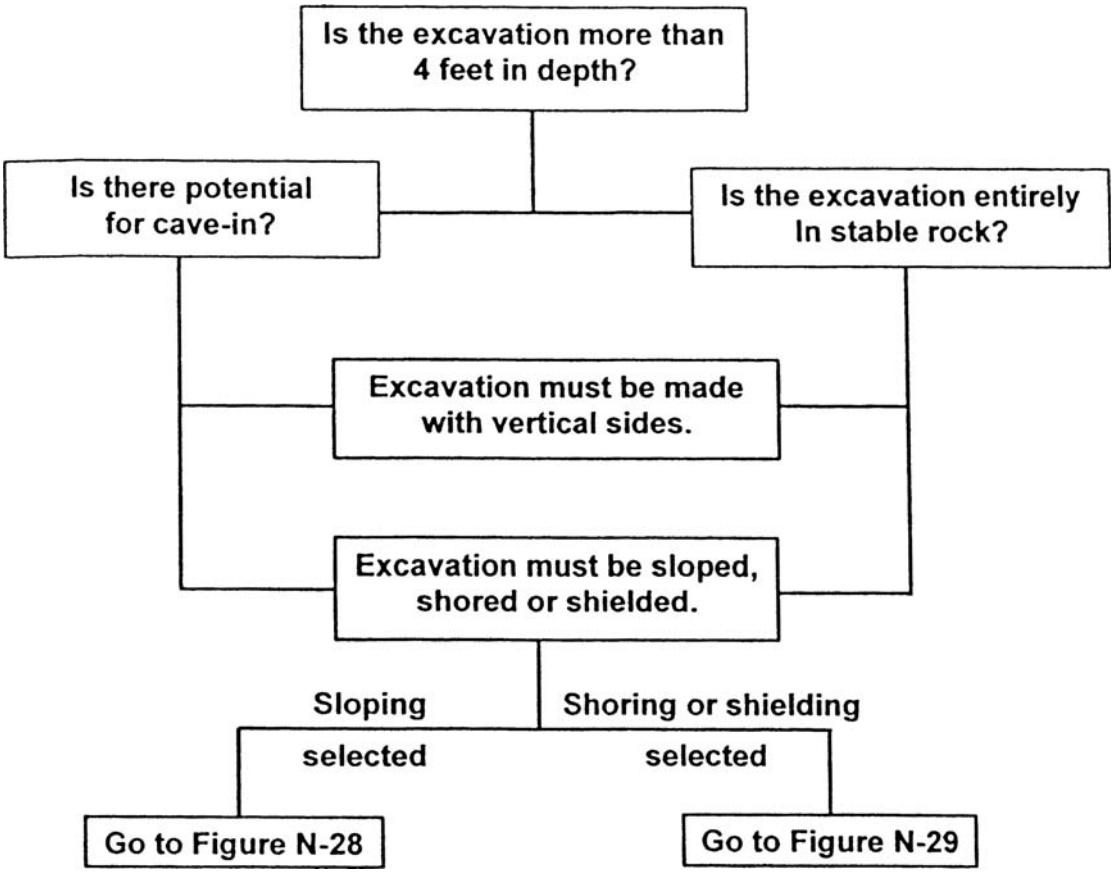

FIGURE N-27 - PRELIMINARY DECISIONS

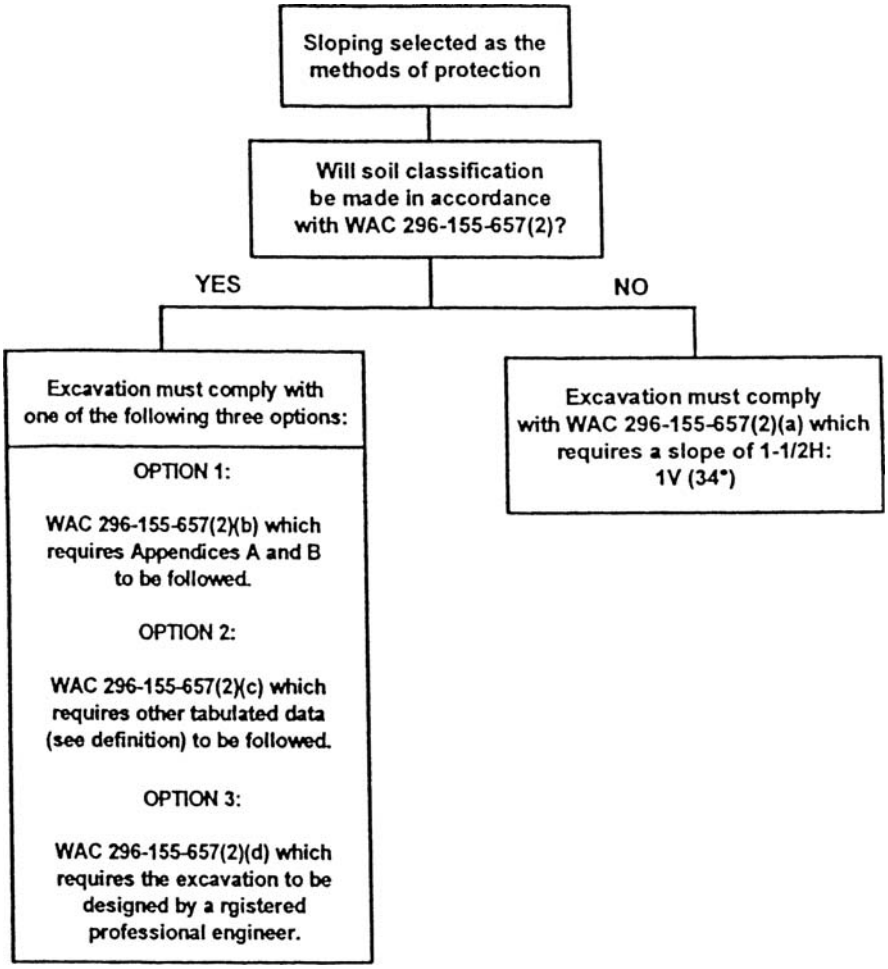

FIGURE N-28 - SLOPING OPTIONS

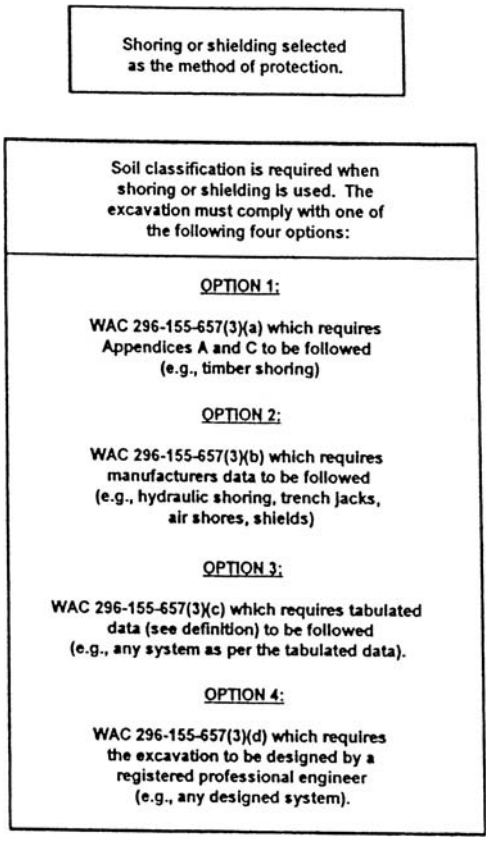

FIGURE N-29 - SHORING AND SHIELDING OPTIONS

[Statutory Authority: RCW 49.17.010, [49.17].040, [49.17].050. WSR 02-12-098, § 296-155-66411, filed 6/5/02, effective 8/1/02. Statutory Authority: Chapter 49.17 RCW and RCW 49.17.040, [49.17].050 and [49.17].060. WSR 92-22-067 (Order 92-06), § 296-155-66411, filed 10/30/92, effective 12/8/92.]

PART O

CONCRETE, CONCRETE FORMS, SHORING, AND MASONRY CONSTRUCTION

WAC 296-155-675 Scope, application, and definitions applicable to this part. (1) Scope and application. This part sets forth requirements to protect all construction employees from the hazards associated with concrete and masonry construction operations performed in workplaces covered under chapter 296-155 WAC.

(2) Definitions applicable to this part.

(a) "Bull float" means a tool used to spread out and smooth the concrete.

(b) "Formwork" means the total system of support for freshly placed or partially cured concrete, including the mold or sheeting (form) that is in contact with the concrete as well as all supporting members including shores, reshores, hardware, braces, and related hardware.

(c) "Jacking operation" means the task of lifting a slab (or group of slabs) vertically from one location to another (e.g., from the casting location to a temporary (parked) location, or from a temporary location to another temporary location, or to its final location in the structure), during the construction of a building/structure where the lift-slab process is being used.

(d) "Lift slab" means a method of concrete construction in which floor and roof slabs are cast on or at ground level and, using jacks, lifted into position.

(e) "Limited access zone" means an area alongside a masonry wall, which is under construction, and which is clearly demarcated to limit access by employees.

(f) "Precast concrete" means concrete members (such as walls, panels, slabs, columns, and beams) which have been formed, cast, and cured prior to final placement in a structure.

(g) "Reshoring" means the construction operation in which shoring equipment (also called reshores or reshoring equipment) is placed, as the original forms and shores are removed, in order to support partially cured concrete and construction loads.

(h) "Shore" means a supporting member that resists a compressive force imposed by a load.

(i) "Vertical slip forms" means forms which are jacked vertically during the placement of concrete.

(j) "Guy" means a line that steadies a high piece or structure by pulling against an off-center load.

[Statutory Authority: Chapter 49.17 RCW. WSR 94-15-096 (Order 94-07), § 296-155-675, filed 7/20/94, effective 9/20/94; WSR 91-11-070 (Order 91-01), § 296-155-675, filed 5/20/91, effective 6/20/91; WSR 90-03-029 (Order 89-20), § 296-155-675, filed 1/11/90, effective 2/26/90; WSR 89-11-035 (Order 89-03), § 296-155-675, filed 5/15/89, effective 6/30/89; Order 74-26, § 296-155-675, filed 5/7/74, effective 6/6/74.]

WAC 296-155-680 General provisions. (1) General. All equipment, material and construction techniques used in concrete construction and masonry work shall meet the applicable requirements for design, construction, inspection, testing, maintenance and operations as prescribed in ANSI A10.9-1997, Concrete and Masonry Work Safety Requirements.

(2) Construction loads. No construction loads shall be placed on a concrete structure or portion of a concrete structure unless the employer determines, based on information received from a person who is qualified in structural design, that the structure or portion of the structure is capable of supporting the loads.

(3) Vertical loads. Vertical loads consist of a dead load plus an allowance for live load. The weight of formwork together with the weight of freshly placed concrete is dead load. The live load consists of the weight of workers, equipment, runways and impact, and shall be computed in pounds per square foot (psf) of horizontal projection.

(4) Lateral loads. Braces and shores shall be designed to resist all foreseeable lateral loads such as wind, cable tensions, inclined supports, impact of placement, and starting and stopping of equipment. The assumed value of load due to wind, impact of concrete, and equipment acting in any direction at each floor line shall not be less than one hundred pounds per lineal foot of floor edge or two percent of total dead load of the floor, whichever is greater. Wall forms shall be designed for a minimum wind load of ten psf, and bracing for wall forms should be designed for a lateral load of at least one hundred pounds per lineal foot of wall, applied at the top. Walls of unusual height require special consideration.

(5) Special loads. Formwork shall be designed for all special conditions of construction likely to occur, such as unsymmetrical placement of concrete, impact of machine-delivered concrete, uplift, and concentrated loads.

(6) Form supports and wedges shall be checked during concrete placement to prevent distortion or failure.

(7) Reinforcing steel.

(a) All protruding reinforcing steel, onto and into which employees could fall, shall be guarded to eliminate the hazard of impalement.

(b) Wire mesh rolls: Wire mesh rolls shall be secured at each end to prevent dangerous recoiling action.

(c) Guying: Reinforcing steel for walls, piers, columns, and similar vertical structures shall be guyed or supported to prevent overturning and to prevent collapse.

(8) Post-tensioning operations.

(a) No employee (except those essential to the post-tensioning operations) shall be permitted to be behind the jack during tensioning operations.

(b) Signs and barriers shall be erected to limit employee access to the post-tensioning area during tensioning operations.

(c) Stressed members must be handled at pick points specifically designated on the manufacturer's drawings.

(d) Stressed members must be lifted with lifting devices recommended by the manufacturer or the engineer in charge.

(e) No one must be allowed under stressed members during lifting and erecting.

(9) Working under loads.

(a) No employee shall be permitted to work under concrete buckets while buckets are being elevated or lowered into position.

(b) To the extent practical, elevated concrete buckets shall be routed so that no employee, or the fewest number of employees, are exposed to the hazards associated with falling concrete buckets.

(10) Personal protective equipment.

(a) No employee shall be permitted to apply a cement, sand, and water mixture through a pneumatic hose unless the employee is wearing protective head and face equipment.

(b) No employee shall be permitted to place or tie reinforcing steel more than six feet (1.8 m) above any adjacent working surface unless the employee is protected by personal fall arrest systems, safety net systems, or positioning device systems meeting the criteria of chapter 296-155 WAC, Part C-1.

(c) Each employee on the face of formwork or reinforcing steel shall be protected from falling 6 feet (1.8 m) or more to lower levels by personal fall arrest systems, safety net systems, or positioning device systems meeting the criteria of chapter 296-155 WAC, Part C-1.

[Statutory Authority: RCW 49.17.010, 49.17.040, 49.17.050, 49.17.440, 49.17.060, and 29 C.F.R. 1926, Subpart CC. WSR 12-01-086, § 296-155-680, filed 12/20/11, effective 2/1/12. Statutory Authority: RCW 49.17.010, 49.17.040, 49.17.050, 49.17.060 and chapter 49.17 RCW. WSR 10-11-103, § 296-155-680, filed 5/18/10, effective 7/1/10. Statutory Authority: RCW 49.17.010, [49.17].040, and [49.17].050. WSR 00-14-058, § 296-155-680, filed 7/3/00, effective 10/1/00. Statutory Authority: Chapter 49.17 RCW. WSR 94-15-096 (Order 94-07), § 296-155-680, filed 7/20/94, effective 9/20/94; WSR 90-17-051 (Order 90-10), § 296-155-680, filed 8/13/90, effective 9/24/90; WSR 90-03-029 (Order 89-20), § 296-155-680, filed 1/11/90, effective 2/26/90; WSR 89-11-035 (Order 89-03), § 296-155-680, filed 5/15/89, effective 6/30/89. Statutory Authority: RCW 49.17.040 and 49.17.050. WSR 86-03-074 (Order 86-14), § 296-155-680, filed 1/21/86; Order 74-26, § 296-155-680, filed 5/7/74, effective 6/6/74.]

WAC 296-155-681 Safe walking surfaces on concrete structural members. Structural members with studs, dowels, or shear connectors installed on the top side shall not be used as a walkway and/or means of access unless such studs, dowels, or shear connectors are covered with suitable material and in such a manner as to provide a walking surface at least as stable and free of hazards as the top surface of the member would provide without attachments installed.

Note: For the purpose of this section, "stud" means all protruding metal attachments to structural members.

[Statutory Authority: Chapter 49.17 RCW. WSR 89-11-035 (Order 89-03), § 296-155-681, filed 5/15/89, effective 6/30/89.]

WAC 296-155-682 Requirements for equipment and tools. (1) Bulk cement storage. Bulk storage bins, containers, and silos shall be equipped with the following:

(a) Conical or tapered bottoms; and

(b) Mechanical or pneumatic means of starting the flow of material.

(2) No employee shall be permitted to enter storage facilities unless the ejection system has been shut down and locked out in accordance with WAC 296-155-429.

(3) Harnesses, lanyards, lifelines or droplines, independently attached or attended, shall be used as prescribed in chapter 296-155 WAC, Part C-1, Fall protection requirements for construction.

(4) Concrete mixers. Concrete mixers with one cubic yard (.8 m3) or larger loading skips shall be equipped with the following:

(a) A mechanical device to clear the skip of materials; and

(b) Guardrails installed on each side of the skip.

(5) Power concrete trowels. Powered and rotating type concrete troweling machines that are manually guided shall be equipped with a control switch that will automatically shut off the power whenever the hands of the operator are removed from the equipment handles.

(6) Concrete buggies. Concrete buggy handles shall not extend beyond the wheels on either side of the buggy.

Note: Installation of knuckle guards on buggy handles is recommended.

(7) Runways.

(a) Runways shall be constructed to carry the maximum contemplated load with a safety factor of four, have a smooth running surface, and be of sufficient width for two buggies to pass. Single runs to have a minimum width of forty-two inches with turnouts. Runways to have standard railings. Where motor driven concrete buggies are used, a minimum four-inches by four-inches wheel guard shall be securely fastened to outside edge of runways.

(b) All concrete buggy runways which are 12 inches or more above a work surface or floor, or ramps with more than 4 percent incline shall be considered "elevated" runways.

Exception: Small jobs utilizing only one concrete buggy, or larger jobs utilizing a "one-way traffic pattern" may be exempt from the requirements for "turnouts" or for "sufficient width for two buggies to pass."

Exemption: Runways less than 12 inches above the floor or ground which are utilized by hard-powered buggies only, may be exempt from the requirements for guardrails and wheelguards.

(8) Concrete pumps and placing booms.

(a) Definitions.

"Concrete delivery hose" means a flexible concrete delivery hose which has two end couplings.

"Concrete pump" means a construction machine that pumps concrete.

"Controls" means the devices used to operate a machine.

"Delivery systems" means the pipe, hoses and components, through which the concrete is pumped.

"Grooved end" means a pipe clamp pipe connection where a groove is machined or rolled directly into the outside of the pipe wall (for example: Victualic).

"Material pressure" means the pressure exerted on the concrete inside the delivery system.

"Placing boom and placing unit" means a manual or power driven, slewable working device which:

• Consists of one or more extendable or folding parts for supporting the concrete delivery system, and directs the discharge into the desired location; and

• May be mounted on trucks, trailers, or special vehicles.

"Qualified person" means someone who:

• Possesses a recognized degree or certificate of professional standing; or

• Has extensive knowledge, training, and experience; or

• Successfully demonstrated the ability to resolve problems relating to the work.

"Restraining devices" means a sling, cable, or equivalent device used to minimize excess movement of a delivery system in case of separation.

"Whip hoses" means a suspended hose that has only one coupling and is used to direct the delivery of concrete.

(b) Equipment requirements.

(i) Equipment identification tag.

The employer must ensure the following identification is furnished if originally identified by the manufacturer and on all pumps manufactured after January 1, 1998:

• The manufacturer's name;

• The year of manufacture;

• The model and serial number;

• The maximum material pressure;

• The maximum allowable pressure in the hydraulic system; and

• The maximum weight per foot of delivery system including concrete.

(ii) Manufacturer's manual.

The employer must have the manufacturer's operation/safety manual or equivalent available for each concrete pump or placing boom.

(iii) Unsafe condition of equipment.

If during an equipment inspection a condition is revealed that might endanger workers, the equipment must not be returned to service until the condition is corrected.

(iv) Controls.

Controls must have their function clearly marked.

(v) Hydraulic systems.

(A) Concrete pumps and placing booms hydraulic systems must have pressure relief valves to prevent cylinder and boom damage.

(B) Hydraulic systems must have hydraulic holding valves if hose or coupling failure could result in uncontrolled vertical movement.

(vi) Certification.

In the event of failure of a structural member, overloading, or contact with energized electric power lines and before return to service, the equipment must be certified safe by:

• The manufacturer; or

• An agent of the manufacturer; or

• A professional engineer.

(vii) Marking weight. A permanent, legible notice stating the total weight of the unit must be marked on:

• Trailer or skid mounted concrete pumps;

• Placing booms; and

• All major detachable components over five hundred pounds.

(viii) Lifting a pump.

A concrete pump must be lifted using the lift points specified by the manufacturer or a professional engineer.

(ix) Emergency shutoff.

A concrete pump must have a clearly labeled emergency stop switch that stops the pumping action.

(x) Inlet and outlet guarding.

(A) The waterbox must have a fixed guard to prevent unintentional access to the moving parts.

(B) The agitator must be guarded with a point of operation guard in accordance with chapter 296-806 WAC, Machine safety, and the guard must be:

• Hinged or bolted in place;

• At least three inches distance from the agitator;

• Be capable of supporting a load of two hundred fifty pounds.

(C) A person must not stand on the guard when the pump or agitator is running.

(xi) Outriggers.

(A) Outriggers must be used in accordance with the manufacturer's specifications.

(B) Concrete pump trucks manufactured after January 1, 1998, must have outriggers or jacks permanently marked to indicate the maximum loading they transmit to the ground.

(xii) Load on a placing boom.

(A) The manufacturer's or a licensed, registered, structural engineer's specifications for the placing boom must not be exceeded by:

• The weight of the load;

• The length and diameter of suspended hose;

• The diameter and weight of mounted pipe.

(B) A concrete placing boom must not be used to drag hoses or lift other loads.

(C) All engineering calculations regarding modifications must be:

• Documented;

• Recorded; and

• Available upon request.

(xiii) Pipe diameter thickness. The pipe wall thickness must be measured in accordance with the manufacturer's instruction, and:

• Be sufficient to maintain a burst pressure greater than the maximum pressure the pump can produce;

• The pipe sections must be replaced when measurements indicate wall thickness has been reduced to the limits specified by the manufacturer.

(xiv) Pipe clamps.

(A) Concrete must not be pumped through a delivery system with grooved ends, such as those for Victualic-type couplers.

(B) Pipe clamps must have a pressure rating at least equal to the pump pressure rating.

(C) Pipe clamps contact surfaces must be free of concrete and other foreign matter.

(D) If quick connect clamps are used, they must be pinned or secured to keep them from opening when used in a vertical application.

(xv) Delivery pipe.

(A) Delivery pipe between the concrete pump and the placing system must be supported and anchored to prevent movement and excessive loading on clamps.

(B) Double ended hoses must not be used as whip hoses.

(C) Attachments must not be placed on whip hoses (i.e., "S" hooks, valves, etc.).

Table 1, Nonmandatory
Recommended maximum yards per hour through hose

Hose Diameter	Hose Length (12' and less) Max. yards per hour	Hose Length (12' and longer) Max. yards per hour
2"	30	30
3"	90	50
4"	160	110
5"	See manufacturer specs	See manufacturer specs

• The above figures are based on a minimum of a 4" slump and a 5 sack mix.

• Variables in mix design can have an effect on these ratings.

• Aggregate should not exceed 1/3 the diameter of the delivery system.

(xvi) Restraining. A restraining device must:

• Be used on attachments suspended from the boom tips; and

• Have a load rating not less than one-fifth of its ultimate breaking strength.

(xvii) Equipment inspection.

(A) An inspection must be conducted annually for the first five years and semiannually thereafter and must include the following:

• Nondestructive testing of all sections of the boom by a method capable of ensuring the structural integrity of the boom;

• Be conducted by a qualified person or by a private agency.

(B) The inspection report must be documented and a copy maintained by the employer and in each unit inspected. It must contain the following:

• The identification, including the serial numbers and manufacturer's name, of the components and parts inspected and tested;

• A description of the test methods and results;

• The names and qualifications of the people performing the inspection;

• A listing of necessary repairs; and

• The signature of the manufacturer, an agent of the manufacturer, or a qualified person.

Note: See WAC 296-155-628 (8)(d) for the inspection worksheet criteria.

(xviii) Equipment repair.

(A) Replacement parts must meet or exceed the original manufacturer's specifications or be certified by a registered professional structural engineer.

(B) A properly certified welder must perform any welding on the boom, outrigger, or structural component.

(xix) Compressed air cleaning of the piping system. To clean the piping system:

(A) The pipe system must be securely anchored before it is cleaned out.

(B) The flexible discharge hose must be removed.

(C) Workers not essential to the cleaning process must leave the vicinity.

(D) The compressed air system must have a shutoff valve.

(E) Blow out caps must have a bleeder valve to relieve air pressure.

(F) A trap basket or containment device (i.e., concrete truck, concrete bucket) must be available and secured to receive the clean out device.

(G) Delivery pipes must be depressurized before clamps and fittings are released.

(c) Qualification and training requirements.

(i) Operator trainee—Qualification requirements. To be qualified to become a concrete pump operator, the trainee must meet the following requirements unless it can be shown that failure to meet the requirements will not affect the operation of the concrete pump boom.

(A) Vision requirements:

• At least 20/30 Snellen in one eye and 20/50 in the other. Corrective lenses may be used to fulfill this requirement;

• Ability to distinguish colors, regardless of position, if color differentiation is required;

• Normal depth perception and field of vision.

(B) Hearing requirements: Hearing adequate to meet operational demands. Corrective devices may be used to fulfill this requirement.

(ii) Operator trainee—Training requirements. Operator trainee training requirements include, but are not limited to, the following:

(A) Demonstrated their ability to read and comprehend the pump manufacturer's operation and safety manual.

(B) Be of legal age to perform the duties required.

(C) Received documented classroom training and testing (as applicable) on these recommended subjects:

• Driving, operating, cleaning and maintaining concrete pumps, placing booms, and related equipment;

• Jib/boom extensions;

• Boom length/angle;

• Manufacturer's variances;
• Radii;
• Range diagram, stability, tipping axis; and
• Structural/tipping determinations.

(D) Maintain and have available upon request a copy of all training materials and a record of training.

(E) Satisfactorily completed a written examination for the concrete pump boom for which they are becoming qualified. It will cover:
• Safety;
• Operational characteristics and limitations; and
• Controls.

(iii) Operator—Qualification requirements. Operators will be considered qualified when they have:

(A) Completed the operator trainee requirements listed in (c)(i) and (ii) of this subsection.

(B) Completed a program of training conducted by a qualified person, including practical experience under the direct supervision of a qualified person.

(C) Passed a practical operating examination of their ability to operate a specific model and type of equipment. Possess the knowledge and the ability to implement emergency procedures.

(D) Possess the knowledge regarding the restart procedure after emergency stop has been activated.

(E) Possess the proper class of driver's license to drive the concrete pump truck.

(F) Demonstrate the ability to comprehend and interpret all labels, safety decals, operator's manuals, and other information required to safely operate the concrete pump.

(G) Be familiar with the applicable safety requirements.

(H) Understand the responsibility for equipment maintenance.

(d) Concrete pump inspection worksheet criteria. Concrete pump trucks will be inspected using the following criteria: The manufacturer's required inspection criteria will be followed in all instances.

Note: DOT requirements for inspections - Ref. 49.C.F.R.396.11, Driver Vehicle Inspections and 396.13, Driver Pre-Trip Inspections; and WAC 296-155-610.

(i) Hydraulic systems.

(A) Oil level;

(B) Hoses;

(C) Fittings;

(D) Holding valves;

(E) Pressure settings;

(F) Hydraulic cylinders;

(G) Ensure that the emergency stop system is functioning properly;

(H) All controls clearly marked.

(ii) Electrical.

(A) All systems functioning properly.

(B) All remote control functions are operating properly. Ensure that the emergency stop system is functioning properly.

(C) All controls clearly marked.

(iii) Structural.

(A) Visual inspection for cracks, corrosion, and deformations of the concrete pump with placing boom structure, and all load carrying components such as outriggers, cross frames, torsion box beams, and delivery line support structures that may lead to nondestructive testing.

(B) Visual examination of all links, pivots, pins, and bolts.

(C) Vertical and horizontal movement at the turret, turntable, rotation gear lash, bearing tolerances, not to exceed manufacturer's specifications.

(iv) Piping systems.

(A) Wall thickness must not exceed original manufacturer's specifications.

(B) Mounting hardware for attaching delivery system.

(C) Correct clamps and safety pins.

(v) Safety decals.

All safety decals shall be in place as required by the manufacturer.

(9) Concrete buckets.

(a) Concrete buckets equipped with hydraulic or pneumatic gates shall have positive safety latches or similar safety devices installed to prevent premature or accidental dumping.

(b) Concrete buckets shall be designed to prevent concrete from hanging up on top and the sides.

(c) Riding of concrete buckets for any purpose shall be prohibited, and vibrator crews shall be kept out from under concrete buckets suspended from cranes or cableways.

(d) When discharging on a slope, the wheels of ready-mix trucks shall be blocked and the brakes set to prevent movement.

(10) Tremies. Sections of tremies and similar concrete conveyances shall be secured with wire rope (or equivalent materials in addition to the regular couplings or connections).

(11) Bull floats. Bull float handles, used where they might contact energized electrical conductors, shall be constructed of nonconductive material or insulated with a nonconductive sheath whose electrical and mechanical characteristics provide the equivalent protection of a handle constructed of nonconductive material.

(12) Masonry saws shall be constructed, guarded, and operated in accordance with WAC 296-155-367 (1) through (4).

(13) Lockout/tagout procedures. No employee shall be permitted to perform maintenance or repair activity on equipment (such as compressors, mixers, screens, or pumps used for concrete and masonry construction activities) where the inadvertent operation of the equipment could occur and cause injury, unless all potentially hazardous energy sources have been locked out and tagged in accordance with chapter 296-155 WAC, Part I.

[Statutory Authority: RCW 49.17.010, 49.17.040, 49.17.050, 49.17.060 and 29 C.F.R. 1926, Subpart M, Fall Protection. WSR 13-04-073, § 296-155-682, filed 2/4/13, effective 4/1/13. Statutory Authority: RCW 49.17.010, 49.17.040, 49.17.050, and 49.17.060. WSR 04-14-028, § 296-155-682, filed 6/29/04, effective 1/1/05. Statutory Authority: RCW 49.17.010, [49.17].040, [49.17].050 and chapter 49.17 RCW. WSR 00-21-102, § 296-155-682, filed 10/18/00, effective 2/1/01. Statutory Authority: Chapter 49.17 RCW. WSR 95-10-016, § 296-155-682, filed 4/25/95, effective 10/1/95; WSR 94-15-096 (Order 94-07), § 296-155-682, filed 7/20/94, effective 9/20/94; WSR 91-03-044 (Order 90-18), § 296-155-682, filed 1/10/91, effective 2/12/91; WSR 90-17-051 (Order 90-10), § 296-155-682, filed 8/13/90, effective 9/24/90; WSR 89-11-035 (Order 89-03), § 296-155-682, filed 5/15/89, effective 6/30/89.]

WAC 296-155-683 Concrete finishing. (1) Scaffolds for use of cement finishers shall comply with the requirements of chapter 296-874 WAC, Scaffolds.

(2) Where grinders, chippers, and other equipment is used which creates a thrust force while working on scaffolding, such scaffold shall be securely tied to a structure or held in with weighted drop lines.

(3) Grinding and dressing operations carried on within closed rooms, stairwells, elevator shafts, etc., shall be provided with forced air ventilation.

(4) Grinding machine operators shall wear respirators whenever machines are in operation or where dust hazard exists.

(5) Eye protection shall be worn by workers engaged in grinding, chipping, or sacking concrete as required by WAC 296-155-215.

[Statutory Authority: RCW 49.17.010, 49.17.040, 49.17.050, 49.17.060 and chapter 49.17 RCW. WSR 10-11-103, § 296-155-683, filed 5/18/10, effective 7/1/10. Statutory Authority: RCW 49.17.010, [49.17].040, [49.17].050 and [49.17].060. WSR 98-05-046, § 296-155-683, filed 2/13/98, effective 4/15/98. Statutory Authority: Chapter 49.17 RCW. WSR 89-11-035 (Order 89-03), § 296-155-683, filed 5/15/89, effective 6/30/89.]

WAC 296-155-684 Requirements for cast in place concrete. (1) General requirements for formwork and placing and removal of forms.

(a) Formwork shall be designed, fabricated, erected, supported, braced, and maintained so that it will be capable of supporting without failure all vertical and lateral loads that may reasonably be anticipated to be applied to the formwork. Formwork which is designed, fabricated, erected, supported, braced, and maintained in conformance with the Appendix to this section will be deemed to meet the requirements of this subdivision.

(b) Any form, regardless of size, shall be planned in every particular and designed and constructed with an adequate factor of safety. In addition to computable loading, additional form pressures may result from impact during concrete placement, sudden lowering of temperatures retarding the set and increasing the liquid head or static pressure, vibrations of the form or concrete, uneven stressing resulting from failure or weakening of form members, or impact from concrete buckets or placing equipment. As a result, an adequate factor of safety is required to offset these unpredictable conditions.

(c) The thoroughness of planning and design shall be governed by the size, complexity, and intended use of the form. Formwork which is complex in nature or which will be subjected to unusually high concrete pressures shall be designed or approved for use by an engineer or experienced form designer.

(d) When moved or raised by crane, cableway, A-frame, or similar mechanical device, forms must be securely attached to slings having a minimum safety factor of five. Use of No. 9 tie wire, fiber rope, and similar makeshift lashing is prohibited.

(e) Taglines must be used in moving panels or other large sections of forms by crane or hoist.

(f) All hoisting equipment, including hoisting cable used to raise and move forms must have a minimum safety factor incorporated in the manufacturer's design, and the manufacturer's recommended loading must not be exceeded. Field-fabricated or shop-fabricated hoisting equipment must be designed or approved by a registered professional engineer, incorporating a minimum safety factor of five in its design. Panels and built-up form sections must be equipped with metal hoisting brackets for attachment of slings.

(2) Drawings or plans, including all revisions, for the jack layout, formwork (including shoring equipment), working decks, and scaffolds, shall be available at the job site.

(3) Shoring and reshoring.

(a) General: Shoring installations constructed in accordance with this standard shall be designed in accordance with American National Standard Recommended Practice for Concrete Formwork, ANSI-(ACI 347-78), Formwork for Concrete ACI 318-83, or with the following publications of the Scaffolding & Shoring Institute: Recommended Standard Safety Code for Vertical Shoring, 1970; Single Post Shore Safety Rules, 1969; and Steel Frame Shoring Safety, Safety Rules, 1969.

(b) All shoring equipment shall be inspected prior to erection to determine that it is as specified in the shoring layout.

(c) A shoring layout shall be prepared or approved by a person qualified to analyze the loadings and stresses which are induced during the construction process.

(d) A copy of the shoring layout shall be available at the job site.

(e) The shoring layout shall include all details of the specification, including unusual conditions such as heavy beams, sloping areas, ramps, and cantilevered slabs, as well as plan and elevation views.

(f) Shoring equipment found to be damaged such that its strength is reduced to less than that required by WAC 296-155-684 (1)(a) shall not be used for shoring.

(g) Erected shoring equipment shall be inspected immediately prior to, during, and immediately after concrete placement.

(h) Upon inspection, shoring equipment that is found to be damaged or weakened shall be immediately removed and replaced.

(i) The sills for shoring shall be sound, rigid, and capable of carrying the maximum intended load without settlement or displacement.

(j) All base plates, shore heads, extension devices, and adjustment screws shall be in firm contact, and secured when necessary, with the foundation and the form.

(k) Eccentric loads on shore heads and similar members shall be prohibited unless these members have been designed for such loading.

(l) The minimum total design load for any shoring used in slab and beam structures shall be not less than one hundred pounds per square foot for the combined live and dead load regardless of slab thickness; however, the minimum allowance for live load and formwork shall be not less than twenty pounds per square foot in addition to the weight of the concrete. Additional allowance for live load shall be added for special conditions other than when placing concrete for standard-type slabs and beams. Shoring shall also be designed to resist all foreseeable lateral loads such as wind, cable tensions, inclined supports, impact of placement, and starting and stopping of equipment. The assumed value of load due to wind, impact of concrete, and equipment acting in any direc-

tion at each floor line shall not be less than one hundred pounds per lineal foot of floor edge or two percent of total dead load of the floor, whichever is greater. (See subsection (3)(b) of this section.)

(m) When motorized carts are used, the design load shall be increased twenty-five pounds per square foot.

(4) The design stresses for form lumber and timbers shall be within the tolerance of the grade, condition, and species of lumber used.

(5) The design stresses used for form lumber and timber shall be shown on all drawings, specifications, and shoring layouts.

(6) All load-carrying timber members of scaffold framing shall be a minimum of 1500 f (stress grade) construction grade lumber. All dimensions are nominal sizes except that where rough sizes are noted, only rough or undressed lumber of the size specified shall satisfy minimum requirements.

(7) When shoring from soil, an engineer or other qualified person shall determine that the soil is adequate to support the loads which are to be placed on it.

(8) Precautions shall be taken so that weather conditions do not change the load-carrying conditions of the soil below the design minimum.

(9) When shoring from fill or when excessive earth disturbance has occurred, an engineer or other qualified person shall supervise the compaction and reworking of the disturbed area and determine that it is capable of carrying the loads which are to be imposed upon it.

(10) Suitable sills shall be used on a pan or grid dome floor or any other floor system involving voids where vertical shoring equipment could concentrate an excessive load on a thin concrete section.

(11) When temporary storage of reinforcing rods, material, or equipment on top of formwork becomes necessary, these areas shall be sufficient to meet the loads.

(12) If any deviation in the shoring plan is necessary because of field conditions, the person who prepared the shoring layout shall be consulted for approval of the actual field setup before concrete is placed.

(13) The shoring setup shall be checked to insure that all details of the layout have been met.

(14) The completed shoring setup shall be a homogenous unit or units and shall have the specified bracing to give it lateral stability.

(15) The shoring setup shall be checked to make certain that bracing specified in the shoring layout for lateral stability is in place.

(16) All vertical shoring equipment shall be plumb. Maximum allowable deviation from the vertical is one-eighth inch in three feet. If this tolerance is exceeded, the shoring equipment shall not be used until readjusted within this limit.

(17) Upon inspection, shoring equipment that is found to be damaged or weakened shall be immediately removed and replaced.

(18) Shoring equipment shall not be released or removed until the approval of a qualified engineer has been received.

(19) Removal of shoring equipment shall be planned so that the equipment which is still in place is not overloaded.

(20) Slabs or beams which are to be reshored should be allowed to take their actual permanent deflection before final adjustment of reshoring equipment is made.

(21) While the reshoring is underway, no construction loads shall be permitted on the partially cured concrete.

(22) The allowable load on the supporting slab shall not be exceeded when reshoring.

(23) The reshoring shall be thoroughly checked to determine that it is properly placed and that it has the load capacity to support the areas that are being reshored.

[Statutory Authority: RCW 49.17.010, 49.17.040, 49.17.050, 49.17.440, 49.17.060, and 29 C.F.R. 1926, Subpart CC. WSR 12-01-086, § 296-155-684, filed 12/20/11, effective 2/1/12. Statutory Authority: Chapter 49.17 RCW. WSR 94-15-096 (Order 94-07), § 296-155-684, filed 7/20/94, effective 9/20/94; WSR 89-11-035 (Order 89-03), § 296-155-684, filed 5/15/89, effective 6/30/89.]

WAC 296-155-685 Tubular welded frame shoring. (1) Metal tubular frames used for shoring shall have allowable loads based on tests conducted according to the Recommended Procedure for Compression Testing of Scaffolds and Shores, Scaffolding & Shoring Institute, 1967.

(2) Design of shoring layouts shall be based on allowable loads which were obtained using the test procedures of subsection (1) of this section and on at least a two and one-half to one safety factor.

(3) All metal frame shoring equipment shall be inspected before erection.

(4) Metal frame shoring equipment and accessories shall not be used if heavily rusted, bent, dented, rewelded, or having broken weldments or other defects.

(5) All locking devices on frames and braces shall be in good working order, coupling pins shall align the frame or panel legs, pivoted cross braces shall have their center pivot in place, and all components shall be in a condition similar to that of original manufacture.

(6) When checking the erected shoring frames with the shoring layout, the spacing between towers and cross-brace spacing shall not exceed that shown on the layout, and all locking devices shall be in the closed position.

(7) Devices for attaching the external lateral stability bracing shall be securely fastened to the legs of the shoring frames.

(8) All baseplates, shore heads, extension devices, or adjustment screws shall be in firm contact with the footing sill and the form material, and shall be snug against the legs of the frames.

(9) Eccentric loads on shore heads and similar members shall be prohibited unless the shore heads have been designed for such loading.

(10) When formwork is installed at an angle, or sloping, or when the surface shored from is sloping, the shoring shall be designed for such loading.

(11) Adjustment screws shall not be adjusted to raise formwork after the concrete is in place.

[Statutory Authority: Chapter 49.17 RCW. WSR 89-11-035 (Order 89-03), § 296-155-685, filed 5/15/89, effective 6/30/89; Order 74-26, § 296-155-685, filed 5/7/74, effective 6/6/74.]

WAC 296-155-686 Tube and coupler shoring. (1) Tube and coupler towers used for shoring shall have allowable loads based on tests conducted according to the Recommended Procedure for Compression Testing of Scaffolds and Shores, Scaffolding & Shoring Institute, 1967.

(2) Design of shoring layouts shall be based on working loads which were obtained using the test procedures of subsection (1) of this section and on at least a two and one-half to one safety factor.

(3) All tube and coupler components shall be inspected before being used.

(4) Tubes of shoring structures shall not be used if heavily rusted, bent, dented, or having other defects.

(5) Couplers (clamps) shall not be used if deformed, broken, or having defective or missing threads on bolts, or other defects.

(6) The material used for the couplers (clamps) shall be of a structural type such as drop-forged steel, malleable iron, or structural grade aluminum. Gray cast iron shall not be used.

(7) When checking the erected shoring towers with the shoring layout, the spacing between posts shall not exceed that shown on the layout, and all interlocking of tubular members and tightness of couplers should be checked.

(8) All baseplates, shore heads, extension devices, or adjustment screws shall be in firm contact with the footing sill and the form material, and shall be snug against the posts.

(9) Eccentric loads on shore heads and similar members shall be prohibited unless the shore heads have been designed for such loading.

(10) Special precautions shall be taken when formwork is at angles, or sloping, or when the surface shored from is sloping.

(11) Adjustment screws shall not be adjusted to raise formwork after the concrete is in place.

[Statutory Authority: Chapter 49.17 RCW. WSR 89-11-035 (Order 89-03), § 296-155-686, filed 5/15/89, effective 6/30/89.]

WAC 296-155-687 Single post shores. (1) When checking erected single post shores with the shoring layout, the spacing between shores in either direction shall not exceed that shown on the layout, and all clamps, screws, pins, and all other components shall be in the closed or engaged position.

(2) For stability, single post shores shall be horizontally braced in both the longitudinal and transverse directions. Diagonal bracing shall also be installed. Such bracing shall be installed as the shores are being erected.

(3) Devices which attach to the external lateral stability bracing shall be securely fastened to the single post shores.

(4) All baseplates or shore heads of single post shores shall be in firm contact with the footing sill and the form material.

(5) Whenever single post shores are used in more than one tier, the layout shall be designed and inspected by a structural engineer.

(6) Eccentric loads on shore heads shall be prohibited unless the shore heads have been designed for such loading.

(7) When formwork is at an angle, or sloping, or when the surface shored from is sloping, the shoring shall be designed for such loading.

(8) Adjustment of single post shores to raise formwork shall not be made after concrete is in place.

(9) Respecting fabricated single post shores, the following shall apply:

(a) The clamp used for adjustable timber single post shores shall have working load ratings based on tests conducted according to the standard test procedures for fabricated single post shores in Recommended Procedure for Compression Testing of Scaffolds and Shores, Scaffolding & Shoring Institute, 1967, and on at least a three to one safety factor.

(b) Shoring layouts shall be made using working loads which were obtained using the test procedures of (a) of this subsection, and on at least a three to one safety factor.

(c) All fabricated single post shores shall be inspected before being used.

(d) Fabricated single post shores shall not be used if heavily rusted, bent, dented, rewelded, or having broken weldments or other defects. If they contain timber, they shall not be used if timber is split, cut, has sections removed, is rotted, or otherwise structurally damaged.

(e) All clamps, screws, pins, threads, and all other components shall be in a condition similar to that of original manufacture.

(10) Respecting adjustable timber single post shores, the following shall apply:

(a) The clamp used for adjustable timber single post shores shall have working load ratings based on tests conducted according to the standard test procedures for fabricated single post shores in Recommended Procedure for Compression Testing of Scaffolds and Shores, Scaffolding & Shoring Institute, 1967, and on at least a three to one safety factor.

(b) Timber used shall have the safety factor and allowable working load for each grade and species as recommended in the Tables for wooden columns in the Wood Structural Design Data Book, National Forest Products Association, 1970.

(c) The shoring layout shall be made using the allowable load obtained by using the test procedure for the clamp or Tables for timber referred to in (a) and (b) of this subsection.

(d) All timber and adjusting devices to be used for adjustable timber single post shores shall be inspected before erection.

(e) Timber shall not be used if it is split, cut, has sections removed, is rotted, or is otherwise structurally damaged.

(f) Adjusting devices shall not be used if heavily rusted, bent, dented, rewelded, or having broken weldments or other defects.

(g) All nails used to secure bracing on adjustable timber single post shores shall be driven home and the point of the nail bent over.

(11) Respecting timber single post shores, the following shall apply:

(a) Timber used as single post shores shall have the safety factor and allowable working load for each grade and species as recommended in the Tables for wooden columns in the Wood Structural Design Data Book, National Forest Products Association, 1970.

(b) The shoring layout shall be prepared by using working loads obtained by using the Tables referred to in (a) of this subsection.

(c) All timber to be used for single post shoring shall be inspected before erection.

(d) Timber shall not be used if it is split, cut, has sections removed, is rotted, or is otherwise structurally damaged.

(e) All nails used to secure bracing on timber single post shores shall be driven home and the point of the nail bent over.

(12) Tiered single post shores. Whenever single post shores are used one on top of another (tiered), the employer shall comply with the following specific requirements in addition to the general requirements for formwork:

(a) The design of the shoring shall be prepared by a qualified designer and the erected shoring shall be inspected by an engineer qualified in structural design.

(b) The single post shores shall be vertically aligned.

(c) The single post shores shall be spliced to prevent misalignment.

(d) The single post shores shall be adequately braced in two mutually perpendicular directions at the splice level. Each tier shall also be diagonally braced in the same two directions.

(e) Adjustment of single post shores to raise formwork shall not be made after the placement of concrete.

(f) Reshoring shall be erected, as the original forms and shores are removed, whenever the concrete is required to support loads in excess of its capacity.

[Statutory Authority: Chapter 49.17 RCW. WSR 89-11-035 (Order 89-03), § 296-155-687, filed 5/15/89, effective 6/30/89.]

WAC 296-155-688 Vertical slip forms. (1) Slip forms shall be designed and constructed, and the form movement carried out, under the immediate supervision of a person or persons experienced in slip form design and operation. Drawings prepared by a qualified engineer, showing the jack layout, formwork, working decks, and scaffolding, shall be available at the jobsite, and followed.

(2) The steel rods or pipe on which the jacks climb or by which the forms are lifted shall be designed for this purpose. Such rods must be adequately braced where not encased in concrete.

(3) Forms shall be designed to prevent excessive distortion of the structure during the jacking operation.

(4) All vertical slip forms shall be provided with scaffolding or work platforms completely encircling the area of placement.

(5) Jacks and vertical supports shall be positioned in such a manner that the loads do not exceed the rated capacity of the jacks.

(6) The jacks or other lifting devices shall be provided with mechanical dogs or other automatic holding devices to support the slip forms whenever failure of the power supply or lifting mechanism occurs.

(7) The form structure shall be maintained within all design tolerances specified for plumbness during the jacking operation.

(8) Lifting shall proceed steadily and uniformly and shall not exceed the predetermined safe rate of lift. A jacking system, which provides precise, simultaneous movement of the entire form in small preselected increments, is recommended for large structures.

(9) Workers placing reinforcing steel shall comply with the requirements of chapter 296-155 WAC, Part C-1 when working above the scaffold level.

(10) The total allowable load on slip form platforms shall be determined by the design engineer and enforced by the field supervisor.

(11) Lateral and diagonal bracing of the forms shall be provided to prevent excessive distortion of the structure during the sliding operation.

(12) While the slide is in operation, the form structure shall be maintained in line and plumb.

(13) A field supervisor experienced in slip form construction shall be present on the deck at all times.

[Statutory Authority: RCW 49.17.010, [49.17].040, [49.17].050 and [49.17].060. WSR 98-05-046, § 296-155-688, filed 2/13/98, effective 4/15/98. Statutory Authority: Chapter 49.17 RCW. WSR 91-03-044 (Order 90-18), § 296-155-688, filed 1/10/91, effective 2/12/91; WSR 89-11-035 (Order 89-03), § 296-155-688, filed 5/15/89, effective 6/30/89.]

WAC 296-155-689 Placing and removal of forms. (1) When moved or raised by crane, cableway, A-frame, or similar mechanical device, forms shall be securely attached to slings having a minimum safety factor of five. Use of No. 9 tie wire, fiber rope, and similar makeshift lashing shall be prohibited.

(2) Taglines shall be used in moving panels or other large sections of forms by crane or hoist.

(3) All hoisting equipment, including hoisting cable used to raise and move forms shall have a minimum safety factor incorporated in the manufacturer's design, and the manufacturer's recommended loading shall not be exceeded. Field-fabricated or shop-fabricated hoisting equipment shall be designed or approved by a registered professional engineer, incorporating a minimum safety factor of five in its design. Panels and built-up form sections shall be equipped with metal hoisting brackets for attachment of slings.

(4) Forms intended for use where there is a free fall of over ten feet shall be equipped with adequate scaffolding and guardrails, or employees working on the forms shall be protected from falls in accordance with chapter 296-155 WAC, Part C-1 during forming and stripping operations.

(5) Vertical forms being raised or removed in sections shall not be released until adequately braced or secured. Overhead forms shall not be released until adequately braced or secured.

(6) Workers or others at lower levels shall be protected from falling materials. Appropriate warning signs shall be erected along walkways.

(7) Forms shall not be removed until the concrete is cured. The concrete shall be adequately set in order to permit safe removal of the forms, shoring, and bracing. Engineer's specifications and local building codes shall be adhered to in determining the length of time forms should remain in place following concrete placement. In addition, tests shall be made on field-cured concrete specimens in order to insure that concrete has obtained sufficient strength to safely support the load prior to removal of forms.

[Statutory Authority: RCW 49.17.010, [49.17].040, [49.17].050 and [49.17].060. WSR 98-05-046, § 296-155-689, filed 2/13/98, effective 4/15/98. Statutory Authority: Chapter 49.17 RCW. WSR 91-03-044 (Order 90-18), § 296-155-689, filed 1/10/91, effective 2/12/91; WSR 89-11-035 (Order 89-03), § 296-155-689, filed 5/15/89, effective 6/30/89.]

WAC 296-155-690 Appendix to WAC 296-155-684 cast in place concrete. General requirements for formwork.

(This Appendix is nonmandatory.)

This Appendix serves as a nonmandatory guideline to assist employers in complying with the formwork requirements in WAC 296-155-684 (1)(a). Formwork which has been designed, fabricated, erected, braced, supported, and maintained in accordance with Sections 6 and 7 of the American National Standard for Construction and Demolition Operations-Concrete and Masonry Work, ANSI A10.9-1983, shall be deemed to be in compliance with the provision of WAC 296-155-684 (1)(a).

[Statutory Authority: Chapter 49.17 RCW. WSR 90-03-029 (Order 89-20), § 296-155-690, filed 1/11/90, effective 2/26/90; WSR 89-11-035 (Order 89-03), § 296-155-690, filed 5/15/89, effective 6/30/89. Statutory Authority: RCW 49.17.040 and 49.17.050. WSR 86-03-074 (Order 86-14), § 296-155-690, filed 1/21/86; Order 74-26, § 296-155-690, filed 5/7/74, effective 6/6/74.]

WAC 296-155-691 Precast concrete and tilt-up operations. (1) It shall be the responsibility of the contractor to use accessories which are designed to be compatible.

(2) The design capacity of all lifting devices and accessories shall be known. The devices and accessories with the appropriate capacity shall be used.

(3) Prior to pouring the panels of a tilt-up type construction job, a set of plans or job specifications, including lifting procedures, shall be drawn up.

(a) These plans shall be at the job site and made available upon request.

(b) Any changes made in the rigging procedure of a tilt-up panel or slab shall provide the same degree of safety as required by the original plans.

(c) The plans or specifications shall contain the following information:

(i) The type, size, and location of all lifting inserts.

(ii) The type, size, and location of all brace inserts or fittings for guy wires in each panel and floor or support.

(iii) The size of braces or guys to be used.

(iv) The compression strength which concrete panels must attain prior to being lifted.

(4) The following conditions shall be included in the erection process and shall be incorporated in the design plan:

(a) Braces and all associated components of the bracing system shall be designed to incorporate a safety factor of one and one-half to resist any normal stresses to which they may be subjected, including normal high wind velocity pressures for the area.

(b) Precast concrete wall units, structural framing, and tilt-up wall panels shall be adequately supported to prevent overturning and to prevent collapse until permanent connections are completed.

(c) Floor braces used to secure panel sections shall be placed at an angle of not less than forty-five degrees or more than sixty degrees from horizontal when physically possible to install in this manner.

(d) The bracing on all panel sections shall be installed in such a manner as to prevent the panel from accidentally rotating.

(e) Each panel section not secured by other means shall have a minimum of two braces. The braces shall be installed in such a manner as to evenly distribute the load or guy wires, when properly installed, may be used in lieu of stiff leg braces.

(f) If braces are attached to a panel or slab by bolts tightened into inserts installed in holes drilled in concrete, the type of inserts used and method of installation shall be such as to develop the required strength to be maintained for the bracing system.

(g) Inserts to be installed for lifting sections of tilt-up precast panels shall be designed mechanically to maintain a safety factor of three.

(h) Lifting inserts which are embedded or otherwise attached to precast concrete members, other than the tilt-up members, shall be capable of supporting at least four times the maximum intended load applied or transmitted to them.

(i) The compression strength of the concrete shall be such that when the proper type, size, and amount of inserts are installed a minimum safety factor of two will be maintained.

(j) Lifting hardware shall be capable of supporting at least five times the maximum intended load applied or transmitted to the lifting hardware.

(k) Lifting bolts or other lifting devices which have been bent, worn, or are defective shall be discarded.

(l) The upper and lower sections of telescoping type braces shall be secured by high tensile steel pins or bolts which provide adequate shear strength and which will positively secure against accidental removal.

(m) Manufactured products shall not be altered in a manner which would reduce the safe working load to less than its original value.

(n) Inserts shall be positioned so that bolts, or lifting devices, when inserted, will be perpendicular to the face on which they are placed.

(5) Design of the panels and layout of the pour shall be made in such a manner so that when picking, the top of the panel will be away from the crane. If this is not possible, the contractor shall consult with a representative of the department and the crane company involved to determine the procedure to be followed in lifting and placing in its permanent position safely. Panels shall be lifted and handled in such a manner that they will not strike the hoisting equipment, in case of failure.

(a) Physical stops shall be provided which will prevent the bottom edge of a panel being set from slipping off the edge of its supporting structure.

(b) Tilt-up panels shall not be set when there is a possibility that wind velocity would create a hazardous condition.

(c) A qualified signalperson shall be designated and shall consult with the crane operator on lifting procedures prior to making the pick. The signalperson shall be located in such a position during the pick of the panel that they can observe both the crane operator and the employees working in the immediate area.

(d) During the lifting process, workers shall keep clear of the under side of the panel.

(e) Persons not involved in the lifting process shall be kept clear of the hazardous area near where panels are being raised, moved or placed.

(f) If braces must be removed temporarily during construction, other effective means shall be provided to safely support the panel during the interim period.

(g) Each panel shall be properly braced or otherwise secured prior to removal of the hoisting equipment.

(h) Short panels or sections not otherwise supported by floor, footings, columns or other structure, shall be properly shored.

[Statutory Authority: Chapter 49.17 RCW. WSR 94-15-096 (Order 94-07), § 296-155-691, filed 7/20/94, effective 9/20/94; WSR 90-17-051 (Order 90-10), § 296-155-691, filed 8/13/90, effective 9/24/90; WSR 89-11-035 (Order 89-03), § 296-155-691, filed 5/15/89, effective 6/30/89.]

WAC 296-155-694 Requirements for lift-slab construction operations. (1) Lift-slab operations shall be designed and planned by a registered professional engineer who has experience in lift-slab construction. Such plans and designs shall be implemented by the employer and shall include detailed instructions and sketches indicating the prescribed method of erection. These plans and designs shall also include provisions for ensuring lateral stability of the building/structure during construction.

(2) Jacks/lifting units shall be marked to indicate their rated capacity as established by the manufacturer.

(3) Jacks/lifting units shall not be loaded beyond their rated capacity as established by the manufacturer.

(4) Jacking equipment shall be capable of supporting at least two and one-half times the load being lifted during jacking operations and the equipment shall not be overloaded. For the purpose of this provision, jacking equipment includes any load bearing component which is used to carry out the lifting operation(s). Such equipment includes, but is not limited to, the following: Threaded rods, lifting attachments, lifting nuts, hook-up collars, T-caps, shearheads, columns, and footings.

(5) Jacks/lifting units shall be designed and installed so that they will neither lift nor continue to lift when they are loaded in excess of their rated capacity.

(6) Jacks/lifting units shall have a safety device installed which will cause the jacks/lifting units to support the load in any position in the event any jack/lifting unit malfunctions or losses [loses] its lifting ability.

(7) Jacking operations shall be synchronized in such a manner to ensure even and uniform lifting of the slab. During lifting, all points at which the slab is supported shall be kept within 1/2 inch of that needed to maintain the slab in a level position.

(8) If leveling is automatically controlled, a device shall be installed that will stop the operation when the 1/2 inch tolerance set forth in subsection (7) of this section is exceeded or where there is a malfunction in the jacking (lifting) system.

(9) If leveling is maintained by manual controls, such controls shall be located in a central location and attended by a competent person while lifting is in progress. In addition to meeting the definition in WAC 296-155-012(4), the competent person must be experienced in the lifting operation and with the lifting equipment being used.

(10) The maximum number of manually controlled jacks/lifting units on one slab shall be limited to a number that will permit the operator to maintain the slab level within specified tolerances of subsection (7) of this section, but in no case shall that number exceed 14.

(11) No employee, except those essential to the jacking operation, shall be permitted in the building/structure while any jacking operation is taking place unless the building/structure has been reinforced sufficiently to ensure its integrity during erection. The phrase "reinforced sufficiently to ensure its integrity" used in this subsection means that a registered professional engineer, independent of the engineer who designed and planned the lifting operation, has determined from the plans that if there is a loss of support at any jack location, that loss will be confined to that location and the structure as a whole will remain stable.

(a) Under no circumstances, shall any employee who is not essential to the jacking operation be permitted immediately beneath a slab while it is being lifted.

(b) For the purpose of subsection (11) of this section, a jacking operation begins when a slab or group of slabs is lifted and ends when such slabs are secured (with either temporary connections or permanent connections).

(c) Employers who comply with Appendix A to WAC 296-155-694 shall be considered to be in compliance with the provisions of subsections (11) through (11)(c) of this section.

(12) When making temporary connections to support slabs, wedges shall be secured by tack welding, or an equivalent method of securing the wedges to prevent them from falling out of position. Lifting rods may not be released until the wedges at that column have been secured.

(13) All welding on temporary and permanent connections shall be performed by a certified welder, familiar with the welding requirements specified in the plans and specifications for the lift-slab operation.

(14) Load transfer from jack/lifting units to building columns shall not be executed unit the welds on the column shear plates (weld blocks) are cooled to air temperature.

(15) Jacks/lifting units shall be positively secured to building columns so that they do not become dislodged or dislocated.

(16) Equipment shall be designed and installed so that the lifting rods cannot slip out of position or the employer shall institute other measures, such as the use of locking or blocking devices, which will provide positive connection between the lifting rods and attachments and will prevent components from disengaging during lifting operations.

Appendix to WAC 296-155-694—Lift-slab operations

(This appendix is nonmandatory.)

In WAC 296-155-694(11), WISHA requires employees to be removed from the building/structure during jacking operations unless an independent registered professional engineer, other than the engineer who designed and planned the lifting operation, has determined that the building/structure has been sufficiently reinforced to insure the integrity of the building/structure. One method to comply with this provision is for the employer to ensure that continuous bottom steel is provided in every slab and in both directions through every wall or column head area. (Column head area means the distance between lines that are one and one half times the thickness of the slab or drop panel. These lines are located outside opposite faces of the outer edges of the shearhead sections—See Figure 1.) The amount of bottom steel shall be established by assuming loss of support at a given lifting jack and then determining the steel necessary to carry, by catenary action over the span between surrounding supports, the slab service dead load plus any service dead and live loads likely to be acting on the slab during jacking. In addition, the sur-

rounding supports must be capable of resisting any additional load transferred to them as a result of the loss of support at the lifting jack considered.

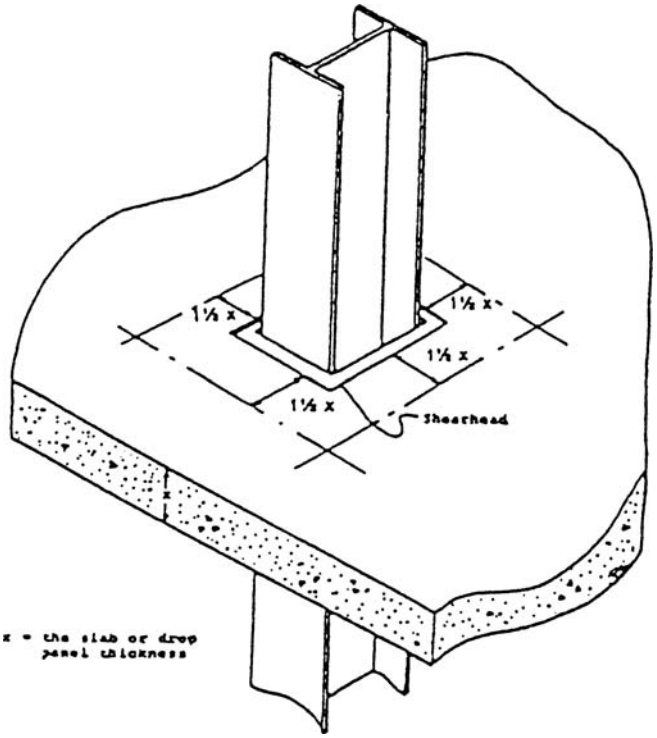

Figure 1—Column Head Area

[Statutory Authority: Chapter 49.17 RCW and RCW 49.17.040, [49.17].050 and [49.17].060. WSR 92-22-067 (Order 92-06), § 296-155-694, filed 10/30/92, effective 12/8/92. Statutory Authority: Chapter 49.17 RCW. WSR 91-11-070 (Order 91-01), § 296-155-694, filed 5/20/91, effective 6/20/91; WSR 90-03-029 (Order 89-20), § 296-155-694, filed 1/11/90, effective 2/26/90; WSR 89-11-035 (Order 89-03), § 296-155-694, filed 5/15/89, effective 6/30/89.]

WAC 296-155-695 Miscellaneous concrete construction. (1) General provisions.

(a) Deadheads used in post tensioning of tendons shall be the type that will increase the grip on the cable as the tension is increased.

(b) Proper means and equipment shall be used to prevent the over-tensioning of the tendons.

(c) Only qualified workers shall perform this type work.

(2) Prestressed and poststressed concrete operations.

(a) Anchor fitting. In utilizing anchor fittings for tensioned strands, the recommendations and instructions of the supplier concerning installation, maintenance, and replacement shall be followed.

(b) Tools and strand vices shall be kept clean and in good repair.

(c) Safety factor.

(i) Expendable strand deflection devices used to pretension concrete members shall have a minimum safety factor of two.

(ii) Reusable strand deflection devices shall have a minimum safety factor of three.

(d) Jacking operations.

(i) During jacking operations of any tensioning element or group of tensioning elements, the anchors shall be kept turned up close to the anchorplate.

(ii) No one shall be permitted to stand in line or directly over the jacking equipment during tensioning operations.

(iii) Employees shall not stand behind the jack during tensioning operations.

(e) Jacking and pulling equipment. Pulling headers, bolts, and hydraulic rams shall be frequently inspected for indication of fatigue, and the threads on bolts and nuts inspected for diminishing cross section.

(f) Storage. Stressed members shall be stored on a level base and adequately supported during storage and transportation to prevent tipping.

(g) Rigging.

(i) Stressed members shall be handled at pick points specifically designated on the manufacturer's drawings.

(ii) Stressed members shall be lifted with lifting devices recommended by the manufacturer or the engineer in charge.

(iii) No one shall be allowed under stressed members during lifting and erection.

[Statutory Authority: Chapter 49.17 RCW. WSR 89-11-035 (Order 89-03), § 296-155-695, filed 5/15/89, effective 6/30/89. Statutory Authority: RCW 49.17.040 and 49.17.050. WSR 86-03-074 (Order 86-14), § 296-155-695, filed 1/21/86; Order 74-26, § 296-155-695, filed 5/7/74, effective 6/6/74.]

WAC 296-155-697 Requirements for masonry construction. (1) A limited access zone shall be established whenever a masonry wall is being constructed. The limited access zone shall conform to the following:

(2) The limited access zone shall be established prior to the start of construction of the wall.

(3) The limited access zone shall be equal to the height of the wall to be constructed plus four feet, and shall run the entire length of the wall.

(4) The limited access zone shall be established on the side of the wall which will be unscaffolded.

(5) The limited access zone shall be restricted to entry by employees actively engaged in constructing the wall. No other employees shall be permitted to enter the zone.

(6) The limited access zone shall remain in place until the wall is adequately supported to prevent overturning and to prevent collapse unless the height of wall is over eight feet, in which case, the limited access zone shall remain in place until the requirements of subsection (7) of this section have been met.

(7) All masonry walls over eight feet in height shall be adequately braced to prevent overturning and to prevent collapse unless the wall is adequately supported so that it will not overturn or collapse. The bracing shall remain in place until permanent supporting elements of the structure are in place.

(8) Employees engaged in cutting or chipping shall wear suitable eye protection in accordance with WAC 296-155-215.

(9) Masonry saws shall be constructed, guarded and operated in accordance with WAC 296-155-367 (1) through (4).

(10) Persons charged with operation of derricks used for stone setting shall be qualified in that type of work.

(11) Stone shall be set directly on the wall by the derrick.

(12) Breast derricks when used in setting stone shall be secured against a slip or kick back and guyed with wire cables. Provide hold down line to prevent derrick from falling back.

(13) Stone cutters shall wear goggles while trimming stone or cutting holes.

(14) Pins shall be tested for security before stone is hoisted.

(15) Hoisting cables shall be protected from chafing and wearing over corners.

(16) Mason's mortar mixers shall have a bar-type grill installed over the mixer opening. The guard shall be installed with an automatic disconnect switch to stop the mixer tub rotation and prevent the mixer from starting whenever the guard is not in place.

[Statutory Authority: Chapter 49.17 RCW. WSR 90-17-051 (Order 90-10), § 296-155-697, filed 8/13/90, effective 9/24/90; WSR 90-03-029 (Order 89-20), § 296-155-697, filed 1/11/90, effective 2/26/90; WSR 89-11-035 (Order 89-03), § 296-155-697, filed 5/15/89, effective 6/30/89.]

WAC 296-155-699 Appendix A to Part O—References to Part O of chapter 296-155 WAC. (This Appendix is nonmandatory.)

The following nonmandatory references provide information which can be helpful in understanding and complying with the requirements contained in Part O.

• Accident Prevention Manual for Industrial Operations; Eighth Edition; National Safety Council.

• Building Code Requirements for Reinforced Concrete (ACI 318-83).

• Formwork for Concrete (ACI SP-4).

• Recommended Practice for Concrete Formwork (ACI 347-78).

• Safety Requirements for Concrete and Masonry Work (ANSI A10.9-1983).

• Standard Test Method for Compressive Strength of Cylindrical Concrete Specimens (ASTM C39-86).

• Standard Test Method for Making and Curing Concrete Test Specimens in the Field (ASTM C31-85).

• Standard Test Method for Penetration Resistance of Hardened Concrete (ASTM C803-82).

• Standard Test Method for Compressive Strength of Concrete Cylinders Cast In-Place in Cylindrical Molds (ASTM C873-85).

• Standard Method for Developing Early Age Compressive Test Values and Projecting Later Age Strengths (ASTM C918-80).

• Recommended Practice for Inspection and Testing Agencies for Concrete, Steel and Bituminous Materials as Used in Construction (ASTM E329-77).

• Method of Making and Curing Concrete Test Specimens in the Laboratory (ASTM C192-88).

• Methods of Obtaining and Testing Drilled Cores and Sawed Beams of Concrete (ASTM C42-87).

• Methods of Securing, Preparing and Testing Specimens from Hardened Lightweight Insulating Concrete for Compressive Strength (ASTM C513-86).

• Test Method for Comprehensive Strength of Lightweight Insulating Concrete (ASTM C495-86).

• Method of Making, Accelerating Curing, and Testing of Concrete Compression Test Specimens (ASTM C684-81).

• Test Method for Compressive Strength of Concrete Using Portions of Beams Broken in Flexure (ASTM C116-68 (1980)).

[Statutory Authority: Chapter 49.17 RCW. WSR 94-15-096 (Order 94-07), § 296-155-699, filed 7/20/94, effective 9/20/94; WSR 89-11-035 (Order 89-03), § 296-155-699, filed 5/15/89, effective 6/30/89.]

PART P

STEEL ERECTION

WAC 296-155-701 Scope. (1)(a) This part applies to employers involved in the construction, alteration and repair of single or multistory buildings, bridges, and a variety of other structures. This part applies to employers involved in steel erection unless specifically excluded.

(b) Examples of steel erection structures include, but are not limited to:

Aerialways;	Aerospace facilities and structures;
Air and cable supported structures;	Amphitheaters;
Amusement park structures and rides;	Aqueducts;
Artistic and monumental structures;	Atriums;
Auditoriums;	Balconies;
Billboards;	Bins;
Bridges;	Canopies;
Car dumpers;	Catwalks;
Chemical process structures;	Conveyor supports and related framing;
Conveyor systems;	Cranes and craneways;
Curtain walls;	Draft curtains;
Elevator fronts;	Energy exploration structures;
Energy production, transfer and storage structures and facilities;	Entrances;
Fire containment structures;	Fire escapes;
Furnaces;	Geodesic domes;
Hi-bay structures;	Hoppers;
Industrial structures;	Lift slab/tilt-up structures;
Light towers;	Malls;
Metal roofs;	Mills;
Monorails;	Ovens;
Overpasses;	Penthouses;
Platforms;	Power plants;
Racks and rack support structures and frames;	Radar and communication structures;
Rail, marine and other transportation structures;	Scoreboards;

Signage;	Single and multistory buildings;
Skylights;	Sound barriers;
Space frames;	Stackers/reclaimers;
Stacks;	Stadiums;
Stair towers;	Stairways;
Store fronts;	Systems-engineered metal buildings;
Trestles;	Underpasses;
Viaducts;	Water process and water containment structures; and
Window walls.	

(2)(a) Covered steel erection work includes the:

■ Hoisting, laying out, placing, connecting, welding, burning, guying, bracing, bolting, plumbing and rigging of structural steel, steel joists, and metal buildings; and

■ Installing metal decking, curtain walls, window walls, siding systems, miscellaneous metals, ornamental iron and similar materials.

(b) The following work is also covered by this part when done during, and are a part of, steel erection work:

Anchoring devices;	Building equipment;
Building specialties;	Cable stays;
Castings;	Cold formed steel framing;
Column covers;	Conveying systems;
Crane rails and accessories;	Detention or security equipment and doors, windows and hardware;
Doors; windows;	Elevator beams;
Enclosures and pockets;	Falsework for temporary supports of permanent steel members;
Fascias;	Fences and gates;
Ferrous metals and alloys;	Floor plates;
Gaskets;	Glass;
Gratings;	Grillage;
Handrails;	Hardware;
Hydraulic structures;	Joint fillers;
Ladders;	Louvers;
Metal decking and raceway systems and accessories;	Metal panels and panel wall systems;
Metal roofing and accessories;	Metal siding; bridge flooring;
Miscellaneous, architectural and ornamental metals and metal work;	Multipurpose supports;
Nonferrous metals and alloys;	Ornamental iron work, expansion control including bridge expansion joint assemblies;
Penthouse enclosures;	Perforated metals;
Permanent and temporary bents and towers;	Plastics and synthetic composite materials;
Railings;	Rigging, hoisting, laying out, placing, connecting, guying, bracing, dismantling, burning, welding, bolting, grinding, sealing, caulking, and all related activities for construction, alteration and/or repair of materials and assemblies such as structural steel;
Safety systems for steel erection;	Sealants and seals;
Sheet metal fabrications;	Shelf racks;
Skylights;	Slide bearings;
Soffit panels;	Stairs;
Steel and metal joists;	Stone and other nonprecast concrete architectural materials mounted on steel frames;
Structural cabling;	Structural metal framing and related bracing and assemblies; and
Trench covers.	

(3) Controlling contractor duties are specified in WAC 296-155-703 (1) and (3), 296-155-707 (2)(b), 296-155-714(2), and 296-155-716(5).

[Statutory Authority: RCW 49.17.010, [49.17].040, and [49.17].050. WSR 02-13-115, § 296-155-701, filed 6/19/02, effective 9/1/02.]

WAC 296-155-702 Definitions. Anchored bridging means that the steel joist bridging is connected to a bridging terminus point.

Bolted diagonal bridging means diagonal bridging that is bolted to a steel joist or joists.

Bridging clip means a device that is attached to the steel joist to allow the bolting of the bridging to the steel joist.

Bridging terminus point means a wall, a beam, tandem joists (with all bridging installed and a horizontal truss in the plane of the top chord) or other element at an end or intermediate point(s) of a line of bridging that provides an anchor point for the steel joist bridging.

Choker means a wire rope or synthetic fiber rigging assembly that is used to attach a load to a hoisting device.

Cold forming means the process of using press brakes, rolls, or other methods to shape steel into desired cross sections at room temperature.

Column means a load-carrying vertical member that is part of the primary skeletal framing system. Columns do not include posts.

Competent person (also defined in WAC 296-155-012) means one who can identify existing or predictable hazards in the surroundings or working conditions which are unsanitary, hazardous, or dangerous to employees, and who has authorization or authority by nature of their position to take prompt

corrective measures to eliminate them. The person must be knowledgeable of the requirements of this part.

Connector means someone who, working with hoisting equipment, is placing and connecting structural members and/or components.

Constructibility means the ability to erect structural steel members in accordance with this part without having to alter the overall structural design.

Construction load (for joist erection) means any load other than the weight of the employee(s), the joists and the bridging bundle.

Controlled load-lowering means lowering a load by means of a mechanical hoist drum device that allows a load to be lowered with maximum control using the gear train or hydraulic components of the hoist mechanism. Controlled load lowering requires the use of the hoist drive motor, rather than the load hoist brake, to lower the load.

Controlling contractor means a prime contractor, general contractor, construction manager or any other legal entity that has the overall responsibility for the construction of the project—its planning, quality and completion.

Critical lift means a lift that:

■ Exceeds seventy-five percent of the crane or derrick rated load chart capacity; or

■ Requires the use of more than one crane or derrick.

Derrick floor means an elevated floor of a building or structure that has been designated to receive hoisted pieces of steel prior to final placement.

Double connection means an attachment method where the connection point is intended for two pieces of steel that share common bolts on either side of a central piece.

Double connection seat means a structural attachment that, during the installation of a double connection, supports the first member while the second member is connected.

Employee (and other terms of like meaning, unless the context of the provision containing such a term indicates otherwise) means an employee of an employer who is employed in the business of his or her employer whether by way of manual labor or otherwise and every person in this state who is engaged in the employment of or who is working under an independent contract the essence of which is personal labor for an employer under this standard whether by way of manual labor or otherwise.

Employer means any person, firm, corporation, partnership, business trust, legal representative, or other business entity which engages in any business, industry, profession, or activity in this state and employs one or more employees or who contracts with one or more persons, the essence of which is the personal labor of such person or persons and includes the state, counties, cities, and all municipal corporations, public corporations, political subdivisions of the state, and charitable organizations: Provided, That any persons, partnership, or business entity not having employees, and who is covered by the Industrial Insurance Act must be considered both an employer and an employee.

Erection bridging means the bolted diagonal bridging that is required to be installed prior to releasing the hoisting cables from the steel joists.

Final interior perimeter means the perimeter of a large permanent open space within a building such as an atrium or courtyard. This does not include openings for stairways, elevator shafts, etc.

Floor hole (decking hole) means an opening measuring less than twelve inches but more than one inch in its least dimension in any floor, roof, or platform through which materials but not persons may fall, such as a belt hole, pipe opening, or slot opening.

Girt (in systems-engineered metal buildings) means a "Z" or "C" shaped member formed from sheet steel spanning between primary framing and supporting wall material.

Headache ball means a weighted hook that is used to attach loads to the hoist load line of the crane.

Hoisting equipment means lifting equipment designed to lift and position a load of known weight to a location at some known elevation and horizontal distance from the equipment's center of rotation. Hoisting equipment includes, but not limited to:

■ Cranes;

■ Derricks;

■ Tower cranes;

■ Barge-mounted derricks or cranes;

■ Gin poles; and

■ Gantry hoist systems.

Note: A come-a-long (a mechanical device, usually consisting of a chain or cable attached at each end, that is used to facilitate movement of materials through leverage) is not considered hoisting equipment.

Metal decking means a commercially manufactured, structural grade, cold rolled metal panel formed into a series of parallel ribs and includes metal floor and roof decks, standing seam metal roofs, other metal roof systems and other products such as bar gratings, checker plate, expanded metal panels, and similar products. After installation and proper fastening, these decking materials serve a combination of functions including: A structural element designed in combination with the structure to resist, distribute and transfer loads, stiffen the structure and provide a diaphragm action; a walking/working surface; a form for concrete slabs; a support for roofing systems; and a finished floor or roof.

Multiple lift rigging means a rigging assembly manufactured by wire rope rigging suppliers that facilitates the attachment of up to five independent loads to the hoist rigging of a crane.

Must means mandatory.

Permanent floor means a structurally completed floor at any level or elevation (including slab on grade).

Post means a structural member with a longitudinal axis that is essentially vertical, that:

• Weighs three hundred pounds or less and is axially loaded (a load presses down on the top end); or

• Is not axially loaded, but is laterally restrained by the above member. Posts typically support stair landings, wall framing, mezzanines and other substructures.

Project structural engineer of record means the registered, licensed professional responsible for the design of structural steel framing and whose seal appears on the structural contract documents.

Purlin (in systems-engineered metal buildings) means a "Z," "C," or "W" shaped member formed from sheet steel spanning between primary framing and supporting roof material.

Qualified person means one who, by possession of a recognized degree, certificate, or professional standing, or who by extensive knowledge, training, and experience, has successfully demonstrated the ability to solve or resolve problems relating to the subject matter, the work, or the project.

Safety deck attachment means an initial attachment that is used to secure an initially placed sheet of decking to keep proper alignment and bearing with structural support members.

Shear connector means headed steel studs, steel bars, steel lugs, and similar devices which are attached to a structural member for the purpose of achieving composite action with concrete.

Steel erection means the construction, alteration or repair of steel buildings, bridges and other structures, including the installation of metal decking and all planking used during the process of erection.

Steel joist means an open web, secondary load-carrying member of one hundred forty-four feet (43.9 m) or less, designed by the manufacturer, used for the support of floors and roofs. This does not include structural steel trusses or cold-formed joists.

Steel joist girder means an open web, primary load-carrying member, designed by the manufacturer, used for the support of floors and roofs. This does not include structural steel trusses.

Steel truss means an open web member designed of structural steel components by the project structural engineer of record. For the purposes of this subpart, a steel truss is considered equivalent to a solid web structural member.

Structural steel means a steel member, or a member made of a substitute material (such as, but not limited to, fiberglass, aluminum or composite members). These members include, but are not limited to, steel joists, joist girders, purlins, columns, beams, trusses, splices, seats, metal decking, girts, and all bridging, and cold formed metal framing which is integrated with the structural steel framing of a building.

Systems-engineered metal building means a metal, field-assembled building system consisting of framing, roof and wall coverings. Typically, many of these components are cold-formed shapes. These individual parts are fabricated in one or more manufacturing facilities and shipped to the job site for assembly into the final structure. The engineering design of the system is normally the responsibility of the systems-engineered metal building manufacturer.

Tank means a container for holding gases, liquids or solids.

You means the employer.

[Statutory Authority: RCW 49.17.010, [49.17].040, and [49.17].050. WSR 02-13-115, § 296-155-702, filed 6/19/02, effective 9/1/02.]

WAC 296-155-703 Site layout, site-specific erection plan and construction sequence. (1) Before steel erection work can start the controlling contractor must ensure the steel erector is provided written notifications that:

(a) The concrete in the footings, piers and walls and the mortar in the masonry piers and walls has attained either:

• Seventy-five percent of the intended minimum compressive design strength; or

• Sufficient strength to support the loads imposed during steel erection.

The basis of these measurements is the appropriate ASTM standard test method of field cured samples.

(b) Any repairs, replacements and modifications to the anchor bolts were done per WAC 296-155-707(2).

(2) The steel erector must receive written notice that the concrete in the footings, piers and walls or the mortar in the masonry piers and walls has attained, on the basis of an appropriate ASTM standard test method of field-cured samples, either seventy-five percent of the intended minimum compressive design strength or sufficient strength to support the loads imposed during steel erection.

(3) **Site layout.** The controlling contractor must ensure that the following is provided and maintained:

(a) Adequate access roads into and through the site for the safe delivery and movement of derricks, cranes, trucks, other necessary equipment, and the material to be erected and means and methods for pedestrian and vehicular control.

Exception: This requirement does not apply to roads outside the construction site.

(b) A firm, properly graded, drained area, readily accessible to the work with adequate space for the safe storage of materials and the safe operation of the erector's equipment.

(4) **Preplanning of overhead hoisting operations.** All hoisting operations in steel erection must be preplanned to ensure that the requirements of WAC 296-155-704(4) are met.

(5) **Site-specific erection plan.** Where employers elect, due to conditions specific to the site, to develop alternate means and methods that provide employee protection in accordance with WAC 296-155-704 (3)(e), 296-155-709 (1)(d) or (5)(d), a site-specific erection plan must be developed by a qualified person and be available at the worksite. Guidelines for establishing a site-specific erection plan are contained in Appendix A to this part.

(6) Steel erection must be done under the supervision of a competent person who is present at the worksite.

[Statutory Authority: RCW 49.17.010, [49.17].040, and [49.17].050. WSR 02-13-115, § 296-155-703, filed 6/19/02, effective 9/1/02.]

WAC 296-155-704 Hoisting and rigging. (1) All the applicable provisions of Part L of this chapter apply to hoisting and rigging while using a crane/derrick. All applicable provisions of Part F-1 of this chapter apply to material handling hoisting equipment when a crane/derrick is not being used.

(2) In addition, subsections (3) through (5) of this section apply regarding the hazards associated with hoisting and rigging.

(3) **General.**

(a) Crane preshift visual inspection.

(i) Cranes being used in steel erection activities must be visually inspected prior to each shift by a competent person. The inspection must include observation for deficiencies during operation and, as a minimum, must include:

• All control mechanisms for maladjustments;

• Control and drive mechanism for excessive wear of components and contamination by lubricants, water or other foreign matter;

• Safety devices, including boom angle indicators, boom stops, boom kick out devices, anti-two block devices, and load moment indicators where required;

• Air, hydraulic, and other pressurized lines for deterioration or leakage, particularly those which flex in normal operation;

• Hooks and latches for deformation, chemical damage, cracks, or wear;

• Wire rope reeving for compliance with hoisting equipment manufacturer's specifications;

• Electrical apparatus for malfunctioning, signs of excessive deterioration, dirt, or moisture accumulation;

• Hydraulic system for proper fluid level;

• Tires for proper inflation and condition;

• Ground conditions around the hoisting equipment for proper support, including ground settling under and around outriggers, ground water accumulation, or similar conditions;

• The hoisting equipment for level position; and

• The hoisting equipment for level position after each move and setup.

(ii) If any deficiency is identified, an immediate determination must be made by the competent person if the deficiency constitutes a hazard.

(iii) If the deficiency constitutes a hazard, the hoisting equipment must be removed from service until the deficiency has been corrected.

(iv) The operator is responsible for those operations under their direct control. Whenever there is any doubt as to safety, the operator must have the authority to stop and refuse to handle loads until safety has been assured.

(b) A qualified rigger (a rigger who is also a qualified person) must inspect the rigging prior to each shift.

(c) The headache ball, hook or load must not be used to transport personnel, except as provided in (d) of this subsection.

(d) Cranes or derricks may be used to hoist employees on a personnel platform when work under this part is being conducted if all the applicable provisions of Part L of this chapter are met.

(e) Safety latches on hooks must not be deactivated or made inoperable except:

(i) When a qualified rigger has determined that the hoisting and placing of purlins and single joists can be performed more safely by doing so; or

(ii) When equivalent protection is provided in a site-specific erection plan.

(4) **Working under loads.**

(a) Routes for suspended loads must be preplanned to ensure that no employee works directly below a suspended load except when:

(i) Engaged in the initial connection of the steel; or

(ii) Necessary for the hooking or unhooking of the load.

(b) Whenever workers are within the fall zone and hooking, unhooking, or guiding a load, or doing the initial connection of a load to a component or structure (WAC 296-155-53400 (43)(c)), the following criteria must be met:

(i) Materials being hoisted must be rigged to prevent unintentional displacement;

(ii) Hooks with self-closing safety latches or their equivalent must be used to prevent components from slipping out of the hook; and

(iii) All loads must be rigged by a qualified rigger.

(5) **Multiple lift rigging procedure.**

(a) A multiple lift must only be performed if the following criteria are met:

• A multiple lift rigging assembly is used;

• A multiple lift is only permitted when specifically within the manufacturer's specifications and limitations;

• A maximum of five members are hoisted per lift;

Exception: Bundles of decking must not be lifted using the multiple lift rigging procedure, even though they meet the definition of structural members in WAC 296-155-702.

• Only beams and similar structural members are lifted; and

• All employees engaged in the multiple lift have been trained in these procedures in accordance with WAC 296-155-717 (3)(a).

(b) Components of the multiple lift rigging assembly must be specifically designed and assembled with a maximum capacity for total assembly and for each individual attachment point. This capacity, certified by the manufacturer or a qualified rigger, must be based on the manufacturer's specifications with a five to one safety factor for all components.

(c) The total load must not exceed:

• The rated capacity of the hoisting equipment specified in the hoisting equipment load charts; and

• The rigging capacity specified in the rigging-rating chart.

(d) The multiple lift rigging assembly must be rigged with members:

• Attached at their center of gravity and maintained reasonably level;

• Rigged from top down; and

• Rigged at least seven feet (2.1 m) apart.

(e) The members on the multiple lift rigging assembly must be set from the bottom up.

(f) Controlled load lowering must be used whenever the load is over the connectors.

[Statutory Authority: RCW 49.17.010, 49.17.040, 49.17.050, 49.17.060 and chapter 49.17 RCW, and 29 C.F.R. 1926, Subpart CC. WSR 13-02-068, § 296-155-704, filed 12/31/12, effective 2/1/13. Statutory Authority: RCW 49.17.010, 49.17.040, 49.17.050, 49.17.440, 49.17.060, and 29 C.F.R. 1926, Subpart CC. WSR 12-01-086, § 296-155-704, filed 12/20/11, effective 2/1/12. Statutory Authority: RCW 49.17.010, 49.17.040, 49.17.050, 49.17.-060 and chapter 49.17 RCW. WSR 10-22-105, § 296-155-704, filed 11/2/10, effective 1/1/11. Statutory Authority: RCW 49.17.010, 49.17.040, 49.17.050, 49.17.060. WSR 06-05-027, § 296-155-704, filed 2/7/06, effective 4/1/06. Statutory Authority: RCW 49.17.010, [49.17].040, and [49.17].-050. WSR 02-13-115, § 296-155-704, filed 6/19/02, effective 9/1/02.]

WAC 296-155-706 Structural steel assembly. (1) Structural stability must be maintained at all times during the erection process.

Note: Federal Highway Administration (FHWA) regulations incorporate by reference a number of standards, policies, and standard specifications published by the American Association of State Highway and Transportation Officials (AASHTO) and other organizations. (See 23 C.F.R. 625.4.) Many of these incorporated provisions may be relevant to maintaining structural stability during the erection process. For instance, as of May 17, 2010, in many cases FHWA requires a registered engineer to prepare and seal working drawings for falsework used in highway bridge construction. (See *AASHTO Specifications for Highway Bridges, Div. II, Sec. 3.2.1, 15th edition, 1992,* which FHWA incorporates by reference in 23 C.F.R. 625.4.) FHWA also encourages compliance with AASHTO Specifications that the FHWA regulations do not currently incorporate by reference. (See http://www.fhwa.dot.gov/bridge/lrfd/index.htm.)

• Make sure that multistory structures have the following:

– Permanent floors installed as the erection of structural members progress;

– No more than eight stories between the erection floor and the upper-most permanent floor; and

– No more than four floors or forty-eight feet (14.6 m), whichever is less, of unfinished bolting or welding above the foundation or uppermost permanent secured floor.

Exception: The above applies except where the structural integrity is maintained as a result of design.

(2) **Walking/working surfaces.**

(a) Shear connectors and other similar devices.

(i) Shear connectors, reinforcing bars, deformed anchors or threaded studs must not be attached to the top flanges of beams, joists or beam attachments so they project vertically from or horizontally across the top flange of the member until after the metal decking, or other walking/working surface has been installed. This becomes a tripping hazard. Examples of shear connectors are headed steel studs, steel bars or steel lugs.

(ii) Installation of shear connectors on composite floors. When shear connectors are used in construction of composite floors, roofs and bridge decks, employees must lay out and install the shear connectors after the metal decking has been installed, using the metal decking as a working platform.

(b) Slip resistance of metal decking.

(c) Safe access must be provided to the working level. Employees must not slide down ropes, columns, or ladders.

(3) **Plumbing-up.**

(a) When deemed necessary by a competent person, plumbing-up equipment must be installed in conjunction with the steel erection process to ensure the stability of the structure.

(b) When used, plumbing-up equipment must be in place and properly installed before the structure is loaded with construction material such as loads of joists, bundles of decking or bundles of bridging.

(c) Plumbing-up equipment must be removed only with the approval of a competent person.

(4) **Metal decking.**

(a) Hoisting, landing and placing of metal decking bundles.

(i) Bundle packaging and strapping must not be used for hoisting unless specifically designed for that purpose.

(ii) If loose items such as dunnage, flashing, or other materials are placed on the top of metal decking bundles to be hoisted, such items must be secured to the bundles.

(iii) Bundles of metal decking on joists must be landed in accordance with WAC 296-155-709 (5)(d).

(iv) Metal decking bundles must be landed on framing members so that enough support is provided to allow the bundles to be unbanded without dislodging the bundles from the supports.

(v) At the end of the shift or when environmental or job site conditions require, metal decking must be secured against displacement.

(b) Roof and floor holes and openings. Metal decking at roof and floor holes and openings must be installed as follows:

(i) Framed metal deck openings must have structural members turned down to allow continuous deck installation except where not allowed by structural design constraints or constructibility.

(ii) Roof and floor holes and openings must be decked over. Where large size, configuration or other structural design does not allow openings to be decked over (such as elevator shafts, stair wells, etc.) employees must be protected in accordance with chapter 296-155 WAC, Part C-1, Fall protection requirements for construction.

(iii) Metal decking holes and openings must not be cut until immediately prior to being permanently filled with the equipment or structure needed or intended to fulfill its specific use and which meets the strength requirements of (c) of this subsection, or must be immediately covered.

(c) **Covering roof and floor openings.** Smoke dome or skylight fixtures that have been installed are not considered covers for the purpose of this section unless they meet the strength requirements of chapter 296-155 WAC, Part C-1, Fall protection requirements for construction.

(d) **Decking gaps around columns.** Wire mesh, exterior plywood, or equivalent, must be installed around columns where planks or metal decking do not fit tightly. The materials used must be of sufficient strength to provide fall protection for personnel and prevent objects from falling through.

(e) **Installation of metal decking.**

(i) Metal decking must be laid tightly and immediately secured upon placement to prevent accidental movement or displacement.

(ii) During initial placement, metal decking panels must be placed to ensure full support by structural members.

(f) **Derrick floors.**

(i) A derrick floor must be fully decked and or planked and the steel member connections completed to support the intended floor loading.

(ii) Temporary loads placed on a derrick floor must be distributed over the underlying support members so as to prevent local overloading of the deck material.

[Statutory Authority: RCW 49.17.010, 49.17.040, 49.17.050, 49.17.060 and 29 C.F.R. 1926, Subpart M, Fall Protection. WSR 13-04-073, § 296-155-706, filed 2/4/13, effective 4/1/13. Statutory Authority: RCW 49.17.010, 49.17.040, 49.17.050, 49.17.060 and chapter 49.17 RCW. WSR 10-22-105, § 296-155-706, filed 11/2/10, effective 1/1/11. Statutory Authority: RCW 49.17.010, 49.17.040, 49.17.050, 49.17.060. WSR 07-03-163, § 296-155-706, filed 1/24/07, effective 4/1/07. Statutory Authority: RCW 49.17.010, [49.17].040, and [49.17].050. WSR 02-13-115, § 296-155-706, filed 6/19/02, effective 9/1/02.]

WAC 296-155-707 Column anchorage. (1) **General requirements for erection stability.**

(a) All columns must be anchored by a minimum of four anchor rods (anchor bolts).

(b) Each column anchor rod (anchor bolt) assembly, including the column-to-base plate weld and the column foundation, must be designed to resist a minimum eccentric gravity load of three hundred pounds (136.2 kg) located eighteen inches (.46 m) from the extreme outer face of the column in each direction at the top of the column shaft.

(c) Columns must be set on level finished floors, pre-grouted leveling plates, leveling nuts, or shim packs which are adequate to transfer the construction loads.

(d) All columns must be evaluated by a competent person to determine whether guying or bracing is needed; if guying or bracing is needed, it must be installed.

(2) **Repair, replacement or field modification of anchor rods (anchor bolts).**

(a) Anchor rods (anchor bolts) must not be repaired, replaced or field-modified without the approval of the project structural engineer of record.

(b) Prior to the erection of a column, the controlling contractor must provide written notification to the steel erector if there has been any repair, replacement or modification of the anchor rods (anchor bolts) of that column.

[Statutory Authority: RCW 49.17.010, [49.17].040, and [49.17].050. WSR 02-13-115, § 296-155-707, filed 6/19/02, effective 9/1/02.]

WAC 296-155-708 Beams and columns. (1) **General.**

(a) During the final placing of solid web structural members, the load must not be released from the hoisting line until the members are secured with at least two bolts per connection. These bolts must be of the same size and strength as shown in the erection drawings, drawn up wrench-tight or the equivalent as specified by the project structural engineer of record.

Exception: See subsection (2) of this section.

(b) A competent person must determine if more than two bolts are necessary to ensure the stability of cantilevered members; if additional bolts are needed, they must be installed.

(2) **Diagonal bracing.** Solid web structural members used as diagonal bracing must be secured by at least one bolt per connection drawn up wrench-tight or the equivalent as specified by the project structural engineer of record.

(3)(a) **Double connections at columns and/or at beam webs over a column.** When two structural members on opposite sides of a column web, or a beam web over a column, are connected sharing common connection holes, at least one bolt with its wrench-tight nut must remain connected to the first member unless a shop-attached or field-attached seat or equivalent connection device is supplied with the member to secure the first member and prevent the column from being displaced (see Appendix E to this part for examples of equivalent connection devices).

(b) If a seat or equivalent device is used, the seat (or device) must be designed to support the load during the double connection process. It must be adequately bolted or welded to both a supporting member and the first member before the nuts on the shared bolts are removed to make the double connection.

(4) **Column splices.** Each column splice must be designed to resist a minimum eccentric gravity load of three hundred pounds (136.2 kg) located eighteen inches (.46 m) from the extreme outer face of the column in each direction at the top of the column shaft.

(5) **Perimeter columns.** Perimeter columns must not be erected unless:

(a) The perimeter columns extend a minimum of forty-eight inches (1.2 m) above the finished floor to permit installation of perimeter safety cables prior to erection of the next tier, except where constructibility does not allow (see Appendix D to this part);

(b) The perimeter columns have holes or other devices in or attached to perimeter columns at forty-two to forty-five inches (107-114 cm) above the finished floor and the midpoint between the finished floor and the top cable to permit installation of perimeter safety cables required by WAC 296-155-716 (1)(b), except where constructibility does not allow. (See Appendix D to this part.)

[Statutory Authority: RCW 49.17.010, [49.17].040, and [49.17].050. WSR 02-13-115, § 296-155-708, filed 6/19/02, effective 9/1/02.]

WAC 296-155-709 Open web steel joists. (1) **General.**

(a) Where steel joists are used and columns are not framed in at least two directions with solid web structural steel members, a steel joist must be field-bolted at the column to provide lateral stability to the column during erection.

Exception: See (b) of this subsection. For the installation of this joist:

(i) A vertical stabilizer plate must be provided on each column for steel joists. The plate must be a minimum of six inch by six inch (152 mm by 152 mm) and must extend at least three inches (76 mm) below the bottom chord of the joist with a 13/16-inch (21 mm) hole to provide an attachment point for guying or plumbing cables.

(ii) The bottom chords of steel joists at columns must be stabilized to prevent rotation during erection.

(iii) Hoisting cables must not be released until the seat at each end of the steel joist is field-bolted, and each end of the bottom chord is restrained by the column stabilizer plate.

(b) Where constructibility does not allow a steel joist to be installed at the column:

(i) An alternate means of stabilizing joists must be installed on both sides near the column and must:

- Provide stability equivalent to (a) of this subsection;
- Be designed by a qualified person;
- Be shop installed; and
- Be included in the erection drawings.

(ii) Hoisting cables must not be released until the seat at each end of the steel joist is field-bolted and the joist is stabilized.

(c) Where steel joists at or near columns span sixty feet (18.3 m) or less, the joist must be designed with sufficient strength to allow one employee to release the hoisting cable without the need for erection bridging.

(d) Where steel joists at or near columns span more than sixty feet (18.3 m), the joists must be set in tandem with all bridging installed unless an alternative method of erection, which provides equivalent stability to the steel joist, is

designed by a qualified person and is included in the site-specific erection plan.

(e) A steel joist or steel joist girder must not be placed on any support structure unless such structure is stabilized.

(f) When steel joist(s) are landed on a structure, they must be secured to prevent unintentional displacement prior to installation.

(g) No modification that affects the strength of a steel joist or steel joist girder must be made without the approval of the project structural engineer of record.

(h) Field-bolted joists.

(i) Except for steel joists that have been preassembled into panels, connections of individual steel joists to steel structures in bays of forty feet (12.2 m) or more must be fabricated to allow for field bolting during erection.

(ii) These connections must be field-bolted unless constructibility does not allow.

(i) Steel joists and steel joist girders must not be used as anchorage points for a fall arrest system unless written approval to do so is obtained from a qualified person.

(j) A bridging terminus point must be established before bridging is installed. (See Appendix E to this part.)

(2) **Attachment of steel joists and steel joist girders.**

(a) Each end of "K" series steel joists must be attached to the support structure with a minimum of two 1/8-inch (3 mm) fillet welds one inch (25 mm) long or with two 1/2-inch (13 mm) bolts, or the equivalent.

(b) Each end of "LH" and "DLH" series steel joists and steel joist girders must be attached to the support structure with a minimum of two 1/4-inch (6 mm) fillet welds two inches (51 mm) long, or with two 3/4-inch (19 mm) bolts, or the equivalent.

(c) Except as provided in (d) of this subsection, each steel joist must be attached to the support structure, at least at one end on both sides of the seat, immediately upon placement in the final erection position and before additional joists are placed.

(d) Panels that have been preassembled from steel joists with bridging must be attached to the structure at each corner before the hoisting cables are released.

(3) **Erection of steel joists.**

(a) Both sides of the seat of one end of each steel joist that requires bridging under Tables A and B must be attached to the support structure before hoisting cables are released.

(b) For joists over sixty feet, both ends of the joist must be attached as specified in subsections (2) and (4) of this section before the hoisting cables are released.

(c) On steel joists that do not require erection bridging under Tables A and B, only one employee must be allowed on the joist until all bridging is installed and anchored.

Table A—Erection of Bridging for Short Span Joists

Joist	Span		Joist	Span		Joist	Span
8L1	NM		22K10	40-0		14KCS1	NM
10K1	NM		22K11	40-0		14KCS2	NM
12K1	23-0		24K4	36-0		14KCS3	NM
12K3	NM		24K5	38-0		16KCS2	NM
12K5	NM		24K6	39-0		16KCS3	NM
14K1	27-0		24K7	43-0		16KCS4	NM
14K3	NM		24K8	43-0		16KCS5	NM
14K4	NM		24K9	44-0		18KCS2	35-0
14K6	NM		24K10	NM		18KCS3	NM
16K2	29-0		24K12	NM		18KCS4	NM
16K3	30-0		26K5	38-0		18KCS5	NM
16K4	32-0		26K6	39-0		20KCS2	36-0
16K5	32-0		26K7	43-0		20KCS3	39-0
16K6	NM		26K8	44-0		20KCS4	NM
16K7	NM		26K9	45-0		20KCS5	NM
16K9	NM		26K10	49-0		22KCS2	36-0
18K3	31-0		26K12	NM		22KCS3	40-0
18K4	32-0		28K6	40-0		22KCS4	NM
18K5	33-0		28K7	43-0		22KCS5	NM
18K6	35-0		28K8	44-0		24KCS2	39-0
18K7	NM		28K9	45-0		24KCS3	44-0
18K9	NM		28K10	49-0		24KCS4	NM
18K10	NM		28K12	53-0		24KCS5	NM
20K3	32-0		30K7	44-0		26KCS2	39-0
20K4	34-0		30K8	45-0		26KCS3	44-0
20K5	34-0		30K9	45-0		26KCS4	NM
20K6	36-0		30K10	50-0		26KCS5	NM
20K7	39-0		30K11	52-0		28KCS2	40-0
20K9	39-0		30K12	54-0		28KCS3	45-0
20K10	NM		10KCS1	NM		28KCS4	53-0
22K4	34-0		10KCS2	NM		28KCS5	53-0
22K5	35-0		10KCS3	NM		30KCS3	45-0
22K6	36-0		12KCS1	NM		30KCS4	54-0
22K7	40-0		12KCS2	NM		30KCS5	54-0
22K9	40-0		12KCS3	NM			

NM = Diagonal bolted bridging not mandatory for joists under 40 feet.

Table B—Erection Bridging for Long Span Joists

Joist	Span		Joist	Span
18LH02	33-0		28LH06	42-0
18LH03	NM		28LH07	NM
18LH04	NM		28LH08	NM
18LH05	NM		28LH09	NM
18LH06	NM		28LH10	NM
18LH07	NM		28LH11	NM
18LH08	NM		28LH12	NM
18LH09	NM		28LH13	NM
20LH02	33-0		32LH06	47-0 through 60-0
20LH03	38-0		32LH07	47-0 through 60-0
20LH04	NM		32LH08	55-0 through 60-0
20LH05	NM		32LH09	NM through 60-0
20LH06	NM		32LH10	NM through 60-0
20LH07	NM		32LH11	NM through 60-0
20LH08	NM		32LH12	NM through 60-0
20LH09	NM		32LH13	NM through 60-0
20LH10	NM		32LH14	NM through 60-0
24LH03	35-0		32LH15	NM through 60-0

Joist	Span		Joist	Span
24LH04	39-0		36LH07	47-0 through 60-0
24LH05	40-0		36LH08	47-0 through 60-0
24LH06	45-0		36LH09	57-0 through 60-0
24LH07	NM		36LH10	NM through 60-0
24LH08	NM		36LH11	NM through 60-0
24LH09	NM		36LH12	NM through 60-0
24LH10	NM		36LH13	NM through 60-0
24LH11	NM		36LH14	NM through 60-0
28LH05	42-0		36LH15	NM through 60-0

NM = Diagonal bolted bridging not mandatory for joists under 40 feet.

(d) Employees must not be allowed on steel joists where the span of the steel joist is equal to or greater than the span shown in Tables A and B except in accordance with WAC 296-155-709(4).

(e) When permanent bridging terminus points cannot be used during erection, additional temporary bridging terminus points are required to provide stability. (See Appendix E of this part.)

(4) **Erection bridging.**

(a) Where the span of the steel joist is equal to or greater than the span shown in Tables A and B, the following must apply:

(i) A row of bolted diagonal erection bridging must be installed near the midspan of the steel joist;

(ii) Hoisting cables must not be released until this bolted diagonal erection bridging is installed and anchored; and

(iii) No more than one employee must be allowed on these spans until all other bridging is installed and anchored.

(b) Where the span of the steel joist is over sixty feet (18.3 m) through one hundred feet (30.5 m), the following must apply:

(i) All rows of bridging must be bolted diagonal bridging;

(ii) Two rows of bolted diagonal erection bridging must be installed near the third points of the steel joist;

(iii) Hoisting cables must not be released until this bolted diagonal erection bridging is installed and anchored; and

(iv) No more than two employees must be allowed on these spans until all other bridging is installed and anchored.

(c) Where the span of the steel joist is over one hundred feet (30.5 m) through one hundred forty-four feet (43.9 m), the following must apply:

(i) All rows of bridging must be bolted diagonal bridging;

(ii) Hoisting cables must not be released until all bridging is installed and anchored; and

(iii) No more than two employees must be allowed on these spans until all bridging is installed and anchored.

(d) For steel members spanning over one hundred forty-four feet (43.9 m), the erection methods used must be in accordance with WAC 296-155-708.

(e) Where any steel joist specified in subsections (3)(b), (4)(a), (b), and (c) of this section is a bottom chord bearing joist, a row of bolted diagonal bridging must be provided near the support(s). This bridging must be installed and anchored before the hoisting cable(s) is released.

(f) When bolted diagonal erection bridging is required by this section, the following must apply:

(i) The bridging must be indicated on the erection drawing;

(ii) The erection drawing must be the exclusive indicator of the proper placement of this bridging;

(iii) Shop-installed bridging clips, or functional equivalents, must be used where the bridging bolts to the steel joists;

(iv) When two pieces of bridging are attached to the steel joist by a common bolt, the nut that secures the first piece of bridging must not be removed from the bolt for the attachment of the second; and

(v) Bridging attachments must not protrude above the top chord of the steel joist.

(5) **Landing and placing loads.**

(a) During the construction period, the employer placing a load on steel joists must ensure that the load is distributed so as not to exceed the carrying capacity of any steel joist.

(b) Except for (d) of this subsection, no construction loads are allowed on the steel joists until all bridging is installed and anchored and all joist-bearing ends are attached.

(c) The weight of a bundle of joist bridging must not exceed a total of one thousand pounds (454 kg). A bundle of joist bridging must be placed on a minimum of three steel joists that are secured at one end. The edge of the bridging bundle must be positioned within one foot (.30 m) of the secured end.

(d) No bundle of decking may be placed on steel joists until all bridging has been installed and anchored and all joist bearing ends attached, unless all of the following conditions are met:

(i) The employer has first determined from a qualified person and documented in a site-specific erection plan that the structure or portion of the structure is capable of supporting the load;

(ii) The bundle of decking is placed on a minimum of three steel joists;

(iii) The joists supporting the bundle of decking are attached at both ends;

(iv) At least one row of bridging is installed and anchored;

(v) The total weight of the bundle of decking does not exceed four thousand pounds (1816 kg); and

(vi) Placement of the bundle of decking must be in accordance with (e) of this subsection.

(e) The edge of the construction load must be placed within one foot (.30 m) of the bearing surface of the joist end.

[Statutory Authority: RCW 49.17.010, [49.17].040, and [49.17].050. WSR 02-13-115, § 296-155-709, filed 6/19/02, effective 9/1/02.]

WAC 296-155-711 Systems-engineered metal buildings. (1) All of the requirements of this part apply to the erection of systems-engineered metal buildings except WAC 296-155-707 (column anchorage) and WAC 296-155-709 (open web steel joists).

(2) Each structural column must be anchored by a minimum of four anchor rods (anchor bolts).

(3) Rigid frames must have fifty percent of their bolts or the number of bolts specified by the manufacturer (whichever is greater) installed and tightened on both sides of the web

adjacent to each flange before the hoisting equipment is released.

(4) Construction loads must not be placed on any structural steel framework unless such framework is safely bolted, welded or otherwise adequately secured.

(5) In girt and eave strut-to-frame connections, when girts or eave struts share common connection holes, at least one bolt with its wrench-tight nut must remain connected to the first member unless a manufacturer-supplied, field-attached seat or similar connection device is present to secure the first member so that the girt or eave strut is always secured against displacement.

(6) Both ends of all steel joists or cold-formed joists must be fully bolted and/or welded to the support structure before:

(a) Releasing the hoisting cables;

(b) Allowing an employee on the joists; or

(c) Allowing any construction loads on the joists.

(7) Purlins and girts must not be used as an anchorage point for a fall arrest system unless written approval is obtained from a qualified person.

(8) Purlins may only be used as a walking/working surface when installing safety systems, after all permanent bridging has been installed and fall protection is provided.

(9) Construction loads may be placed only within a zone that is within eight feet (2.5 m) of the center line of the primary support member.

[Statutory Authority: RCW 49.17.010, [49.17].040, and [49.17].050. WSR 02-13-115, § 296-155-711, filed 6/19/02, effective 9/1/02.]

WAC 296-155-714 Falling object protection. (1) Securing loose items aloft. All materials, equipment, and tools, which are not in use while aloft, must be secured against accidental displacement.

(2) Protection from falling objects other than materials being hoisted. The controlling contractor must bar other construction processes below steel erection unless overhead protection for the employees below is provided.

[Statutory Authority: RCW 49.17.010, [49.17].040, and [49.17].050. WSR 02-13-115, § 296-155-714, filed 6/19/02, effective 9/1/02.]

WAC 296-155-716 Fall protection. (1) **General requirements.**

(a) Fall protection will be in accordance with chapter 296-155 WAC, Part C-1, Fall protection requirements for construction.

(b) During steel erection activities, fall protection must be as required by chapter 296-155 WAC, Part C-1. Additionally, on multistory structures, perimeter safety cables must be installed at the final interior and exterior perimeters of the floors as soon as metal decking has been installed. See Appendix D.

(2) **Connectors.** Each connector must: Have completed connector training in accordance with WAC 296-155-717.

(3) **Custody of fall protection.** Fall protection provided by the steel erector must remain in the area where steel erection activity has been completed, to be used by other trades, only if the controlling contractor or its authorized representative:

(a) Has directed the steel erector to leave the fall protection in place; and

(b) Has inspected and accepted control and responsibility of the fall protection prior to authorizing persons other than steel erectors to work in the area.

[Statutory Authority: RCW 49.17.010, 49.17.040, 49.17.050, 49.17.060 and 29 C.F.R. 1926, Subpart M, Fall Protection. WSR 13-04-073, § 296-155-716, filed 2/4/13, effective 4/1/13. Statutory Authority: RCW 49.17.010, [49.17].040, and [49.17].050. WSR 02-13-115, § 296-155-716, filed 6/19/02, effective 9/1/02.]

WAC 296-155-717 Training. (1) **Training personnel.** Training required by this section must be provided by a qualified person(s).

(2) **Fall hazard training.** The employer shall train each employee exposed to a fall hazard in accordance with the requirements of this chapter. The employer shall institute a training program as required by chapter 296-155 WAC, Part C-1, and ensure employee participation in the program.

(3) **Special training programs.** In addition to the training required in subsection (2) of this section, the employer must provide special training to employees engaged in the following activities:

(a) Multiple lift rigging procedure. The employer must ensure that each employee who performs multiple lift rigging has been provided training in the following areas:

(i) The nature of the hazards associated with multiple lifts; and

(ii) The proper procedures and equipment to perform multiple lifts required by WAC 296-155-704(5).

(b) Connector procedures. The employer must ensure that each connector has been provided training in the following areas:

(i) The nature of the hazards associated with connecting (see Appendix D for nonmandatory training guidelines); and

(ii) The establishment, access, proper connecting techniques, double connections, and work practices, required by WAC 296-155-708(3) and Part C-1, chapter 296-155 WAC.

[Statutory Authority: RCW 49.17.010, 49.17.040, 49.17.050, 49.17.060. WSR 09-15-145, § 296-155-717, filed 7/21/09, effective 9/1/09. Statutory Authority: RCW 49.17.010, [49.17].040, and [49.17].050. WSR 02-13-115, § 296-155-717, filed 6/19/02, effective 9/1/02.]

PART Q

UNDERGROUND CONSTRUCTION

WAC 296-155-725 Definitions applicable to this part. (1) "Acceptable" means any device, equipment, or appliance that is either approved by MSHA and maintained in permissible condition, or is listed or labeled for the class and location under Part I of this chapter.

(2) "Bulkhead" means an airtight structure separating the working chamber from free air or from another chamber under a lesser pressure than the working pressure.

(3) "Caisson" means a wood, steel, concrete or reinforced concrete, air- and water-tight chamber in which it is possible for persons to work under air pressure greater than atmospheric pressure to excavate material below water level.

(4) "Cofferdam" means a watertight barricade or enclosure erected, sunk, driven or otherwise fabricated to permit the performance of work where hydrostatic pressure exists.

(5) "Decanting" means a method used for decompressing under emergency circumstances. In this procedure, the

employees are brought to atmospheric pressure with a very high gas tension in the tissues and then immediately recompressed in a second and separate chamber or lock.

(6) "Emergency locks" means a lock designed to hold and permit the quick passage of an entire shift of employees.

(7) "High air" means air pressure used to supply power to pneumatic tools and devices.

(8) "Low air" means air supplied to pressurize working chambers and locks.

(9) "Man lock" means a chamber through which persons pass from one air pressure environment into another.

(10) "Materials lock" means a chamber through which materials and equipment pass from one air pressure environment into another.

(11) "Medical lock" means a special chamber in which employees are treated for decompression illness. It may also be used in pre-employment physical examinations to determine the adaptability of the prospective employee to changes in pressure.

(12) "Rapid excavation machine" means tunnel boring machines, shields, roadheaders, or any other similar excavation machine.

(13) "Normal condition" means one during which exposure to compressed air is limited to a single continuous working period followed by a single decompression in any given 24-hour period; the total time of exposure to compressed air during the single continuous working period is not interrupted by exposure to normal atmospheric pressure, and a second exposure to compressed air does not occur until at least 12 consecutive hours of exposure to normal atmospheric pressure has elapsed since the employee has been under pressure.

(14) "Pressure" means a force acting on a unit area. Usually shown as pounds per square inch. (p.s.i.)

(15) "Absolute pressure" (p.s.i.a.) means the sum of the atmospheric pressure and gauge pressure (p.s.i.g.)

(16) "Atmospheric pressure" means the pressure of air at sea level, usually 14.7 p.s.i.a. (1 atmosphere), or 0 p.s.i.g.

(17) "Gauge pressure" (p.s.i.g.) means pressure measured by a gauge and indicating the pressure exceeding atmospheric.

(18) "Safety screen" means an air- and water-tight diaphragm placed across the upper part of a compressed air tunnel between the face and bulkhead, in order to prevent flooding the crown of the tunnel between the safety screen and the bulkhead, thus providing a safe means of refuge and exit from a flooding or flooded tunnel.

(19) "Special decompression chamber" means a chamber to provide greater comfort for employees when the total decompression time exceeds 75 minutes.

(20) "Working chamber" means the space or compartment under air pressure in which the work is being done.

(21) "C.F.R." means Code of Federal Regulations.

(22) "MSHA" means Mine Safety and Health Administration.

(23) "NIOSH" means National Institute for Occupational Safety and Health.

[Statutory Authority: Chapter 49.17 RCW. WSR 90-03-029 (Order 89-20), § 296-155-725, filed 1/11/90, effective 2/26/90. Statutory Authority: RCW 49.17.040 and 49.17.050. WSR 86-03-074 (Order 86-14), § 296-155-725, filed 1/21/86; Order 74-26, § 296-155-725, filed 5/7/74, effective 6/6/74.]

WAC 296-155-730 Tunnels and shafts. (1) Scope and application.

(a) This section applies to the construction of underground tunnels, shafts, chambers, and passageways. This section also applies to cut-and-cover excavations which are both physically connected to ongoing underground construction operations within the scope of this section, and covered in such a manner as to create conditions characteristic of underground construction.

(b) This section does not apply to excavation and trenching operations covered by Part N of this chapter, such as foundation operations for above-ground structures that are not physically connected to underground construction operations, and surface excavation.

(c) The employer shall comply with the requirements of this part and chapter in addition to applicable requirements of chapter 296-36 WAC, Safety standards—Compressed air work.

(2) Access and egress.

(a) Each operation shall have a check-in/check-out system that will provide positive identification of every employee underground. An accurate record of identification and location of the employees shall be kept on the surface. This procedure is not required when the construction of underground facilities designed for human occupancy has been sufficiently completed so that the permanent environmental controls are effective, and when the remaining construction activity will not cause any environmental hazard, or structural failure within the facilities.

(b) The employer shall provide and maintain safe means of access and egress to all work stations.

(c) The employer shall provide access and egress in such a manner that employees are protected from being struck by excavators, haulage machines, trains, and other mobile equipment.

(d) The employer shall control access to all openings to prevent unauthorized entry underground. Unused chutes, manways, or other openings shall be tightly covered, bulkheaded, or fenced off, and shall be posted with warning signs indicating "keep out" or similar language. Completed or unused sections of the underground facility shall be barricaded.

(3) Safety instruction. All employees shall be instructed in the recognition and avoidance of hazards associated with underground construction activities including, where appropriate, the following subjects:

(a) Air monitoring;

(b) Ventilation;

(c) Confined space entry procedures;

(d) Permit-required confined space entry procedures;

(e) Illumination;

(f) Communications;

(g) Flood control;

(h) Mechanical equipment;

(i) Personal protective equipment;

(j) Explosives;

(k) Fire prevention and protection; and

(l) Emergency procedures, including evacuation plans and check-in/check-out systems.

(4) Notification.

(a) Oncoming shifts shall be informed of any hazardous occurrences or conditions that have affected, or might affect employee safety, including liberation of gas, equipment failures, earth or rock slides, cave-ins, floodings, fire(s), or explosions.

(b) Information specified in (a) of this subsection shall be recorded in a shift journal which shall be current prior to the end of each shift, and shall be located aboveground.

(c) Oncoming supervisory personnel shall read the notification prior to going underground, and shall signify their understanding of the contents by affixing their respective initials to the log.

(d) The hazard notification log shall be retained on the site until the completion of the project.

(e) The employer shall establish and maintain direct communications for coordination of activities with other employers whose operations at the job site affect or may affect the safety of employees underground.

(5) Communications.

(a) When natural unassisted voice communication is ineffective, a power-assisted means of voice communication shall be used to provide communication between the work face, the bottom of the shaft, and the surface.

(b) Two effective means of communication, at least one of which shall be voice communication, shall be provided in all shafts which are being developed or used either for personnel access or for hoisting. Additional requirements for hoist operator communication are contained in subsection (22)(c)(xv) of this section.

(c) Powered communication systems shall operate on an independent power supply, and shall be installed so that the use of or disruption of any one phone or signal location will not disrupt the operation of the system from any other location.

(d) Communication systems shall be tested upon initial entry of each shift to the underground, and as often as necessary at later times, to ensure that they are in working order.

(e) Any employee working alone underground in a hazardous location, who is both out of the range of natural unassisted voice communication and not under observation by other persons, shall be provided with an effective means of obtaining assistance in an emergency.

(6) Emergency provisions. Hoisting capability. When a shaft is used as a means of egress, the employer shall make advance arrangements for power-assisted hoisting capability to be readily available in an emergency, unless the regular hoisting means can continue to function in the event of an electrical power failure at the job site. Such hoisting means shall be designed so that the load hoist drum is powered in both directions of rotation and so that the brake is automatically applied upon power release or failure.

(7) Self-rescuers. The employer must provide self-rescuers certified by the National Institute for Occupational Safety and Health under 42 C.F.R. part 84. The respirators must be immediately available to all employees at work stations in underground areas where employees might be trapped by smoke or gas. The selection, issuance, use, and care of respirators must be in accordance with the requirements of chapter 296-842 WAC.

(8) Designated person. At least one designated person shall be on duty aboveground whenever any employee is working underground. This designated person shall be responsible for securing immediate aid and keeping an accurate record of the number, identification, and location of employees who are underground in case of emergency. The designated person must not be so busy with other responsibilities that the personnel counting and identification function is encumbered.

(9) Emergency lighting. Each employee underground shall have an acceptable portable hand lamp or cap lamp in his or her work area for emergency use, unless natural light or an emergency lighting system provides adequate illumination for escape.

(10) Rescue teams.

(a) On job sites where 25 or more employees work underground at one time, the employer shall provide (or make arrangements in advance with locally available rescue services to provide) at least two 5-person rescue teams, one on the job site or within one-half hour travel time from the entry point, and the other within 2 hours travel time.

(b) On job sites where less than 25 employees work underground at one time, the employer shall provide (or make arrangements in advance with locally available rescue services to provide) at least one 5-person rescue team to be either on the job site or within one-half hour travel time from the entry point.

(c) Rescue team members shall be qualified in rescue procedures, the use and limitations of breathing apparatus, and the use of firefighting equipment. Qualifications shall be reviewed not less than annually.

(d) On job sites where flammable or noxious gases are encountered or anticipated in hazardous quantities, rescue team members shall practice donning and using pressure demand mode, self-contained breathing apparatuses monthly.

(e) The employer shall ensure that rescue teams are familiar with conditions at the job site.

(11) Hazardous classifications.

(a) Potentially gassy operations. Underground construction operations shall be classified as potentially gassy if either:

(i) Air monitoring discloses 10 percent or more of the lower explosive limit for methane or other flammable gases measured at 12 inches (304.8 mm)+/-0.25 inch (6.35 mm) from the roof, face, floor, or walls in any underground work area for more than a 24-hour period; or

(ii) The history of the geographical area or geological formation indicates that 10 percent or more of the lower explosive limit for methane or other flammable gases is likely to be encountered in such underground operations.

(b) Gassy operations. Underground construction operations shall be classified as gassy if:

(i) Air monitoring discloses 10 percent or more of the lower explosive limit for methane or other flammable gases measured at 12 inches (304.8 mm)+/-0.25 inch (6.35 mm) from the roof, face, floor, or walls in any underground work area for three consecutive days; or

(ii) There has been an ignition of methane or of other flammable gases emanating from the strata that indicates the presence of such gases; or

(iii) The underground construction operation is both connected to an underground work area which is currently classified as gassy and is also subject to a continuous course of air containing the flammable gas concentration.

(c) Declassification to potentially gassy operations. Underground construction gassy operations may be declassified to potentially gassy when air monitoring results remain under 10 percent of the lower explosive limit for methane or other flammable gases for three consecutive days.

(12) Gassy operations—Additional requirements. Only acceptable equipment, maintained in suitable condition, shall be used in gassy operations.

(a) Mobile diesel-powered equipment used in gassy operations shall be either approved in accordance with the requirements of 30 C.F.R. Part 36 (formerly Schedule 31) by MSHA, or shall be demonstrated by the employer to be fully equivalent to such MSHA-approved equipment, and shall be operated in accordance with that part.

(b) Each entrance to a gassy operation shall be prominently posted with signs notifying all entrants of the gassy classification.

(c) Smoking shall be prohibited in all gassy operations and the employer shall be responsible for collecting all personal sources of ignition, such as matches and lighters, from all persons entering a gassy operation.

(d) A fire watch as described in chapter 296-155 WAC, Part H, shall be maintained when hot work is performed.

(e) Once an operation has met the criteria in subsection (11)(a)(i) of this section, warranting classification as gassy, all operations in the affected area, except the following, shall be discontinued until the operation either is in compliance with all of the gassy operation requirements or has been declassified in accordance with (c) of this subsection:

(i) Operations related to the control of the gas concentration;

(ii) Installation of new equipment, or conversion of existing equipment, to comply with this subsection; and

(iii) Installation of above-ground controls for reversing the air flow.

(13) Air quality and monitoring.

(a) General. Air quality limits and control requirements specified in chapter 296-841 WAC shall apply except as modified by this subsection.

(b) The employer shall assign a competent person who shall perform all air monitoring required by this section.

(c) Where this section requires monitoring of airborne contaminants "as often as necessary," the competent person shall make a reasonable determination as to which substances to monitor and how frequently to monitor, considering at least the following factors:

(i) Location of job site: Proximity to fuel tanks, sewers, gas lines, old landfills, coal deposits, and swamps;

(ii) Geology: Geological studies of the job site, particularly involving the soil type and its permeability;

(iii) History: Presence of air contaminants in nearby job sites, changes in levels of substances monitored on the prior shift; and

(iv) Work practices and job site conditions: The use of diesel engines, use of explosives, use of fuel gas, volume and flow of ventilation, visible atmospheric conditions, decompression of the atmosphere, welding, cutting and hot work, and employees' physical reactions to working underground.

(d) The employer shall provide testing and monitoring instruments which are capable of achieving compliance with the provisions of this subsection, and:

(i) Shall maintain the testing and monitoring instruments in good condition;

(ii) Shall calibrate the instruments on a frequency not to exceed 6 months.

(e) Exposure to airborne contaminants shall not exceed the levels established by chapter 296-841 WAC.

(f) Respirators shall not be substituted for environmental control measures. However, where environmental controls have not yet been developed, or when necessary by the nature of the work involved (for example, welding, sand blasting, lead burning), an employee may work for short periods of time in concentrations of airborne contaminants which exceed the limit of permissible exposure referred to in (d) of this subsection, if the employee wears a respiratory protective device certified by MSHA-NIOSH for protection against the particular hazards involved, and the selection and use of respirators complies with the provisions of chapter 296-842 WAC.

(g) Employees shall be withdrawn from areas in which there is a concentration of an airborne contaminant which exceeds the permissible exposure limit listed for that contaminant, except as modified in (t)(i) and (ii) of this subsection.

(h) The atmosphere in all underground work areas shall be tested as often as necessary to assure that the atmosphere at normal atmospheric pressure contains at least 19.5 percent oxygen and no more than 22 percent oxygen.

(i) Tests for oxygen content shall be made before tests for air contaminants.

(j) Field-type oxygen analyzers, or other suitable devices, shall be used to test for oxygen deficiency.

(k) The atmosphere in all underground work areas shall be tested quantitatively for carbon monoxide, nitrogen dioxide, hydrogen sulfide, and other toxic gases, dust, vapors, mists, and fumes as often as necessary to ensure that the permissible exposure limits prescribed in chapter 296-62 WAC, Part H, are not exceeded.

(l) The atmosphere in all underground work areas shall be tested quantitatively for methane and other flammable gases as often as necessary to determine:

(i) Whether action is to be taken under (q), (r), and (s) of this subsection; and

(ii) Whether an operation is to be classified potentially gassy or gassy under subsection (11) of this section.

(m) If diesel-engine or gasoline-engine driven ventilating fans or compressors are used, an initial test shall be made of the inlet air of the fan or compressor, with the engines operating, to ensure that the air supply is not contaminated by engine exhaust.

(n) Testing shall be performed as often as necessary to ensure that the ventilation requirements of subsection (15) of this section are met.

(o) When rapid excavation machines are used, a continuous flammable gas monitor shall be operated at the face with the sensor(s) placed as high and close to the front of the machine's cutter head as practicable.

(p) Whenever air monitoring indicates the presence of 5 ppm or more of hydrogen sulfide, a test shall be conducted in the affected underground work area(s), at least at the beginning and midpoint of each shift, until the concentration of hydrogen sulfide has been less than 5 ppm for 3 consecutive days.

(i) Whenever hydrogen sulfide is detected in an amount exceeding 10 ppm, a continuous sampling and indicating hydrogen sulfide monitor shall be used to monitor the affected work area.

(ii) Employees shall be informed when a concentration of 10 ppm hydrogen sulfide is exceeded.

(iii) The continuous sampling and indicating hydrogen sulfide monitor shall be designed, installed, and maintained to provide a visual and aural alarm when the hydrogen sulfide concentration reaches 15 ppm to signal that additional measures, such as respirator use, increased ventilation, or evacuation, might be necessary to maintain hydrogen sulfide exposure below the permissible exposure limit.

(q) When the competent person determines, on the basis of air monitoring results or other information, that air contaminants may be present in sufficient quantity to be dangerous to life, the employer shall:

(i) Prominently post a notice at all entrances to the underground job site to inform all entrants of the hazardous condition; and

(ii) Immediately increase sampling frequency levels to insure workers are not exposed to identified contaminants in excess of the permissible exposure limit(s); and

(iii) Ensure that all necessary precautions are taken to comply with pertinent requirements of this section, and chapter 296-62 WAC.

(r) Whenever five percent or more of the lower explosive limit for methane or other flammable gases is detected in any underground work area(s) or in the air return, steps shall be taken to increase ventilation air volume or otherwise control the gas concentration, unless the employer is operating in accordance with the potentially gassy or gassy operation requirements. Such additional ventilation controls may be discontinued when gas concentrations are reduced below five percent of the lower explosive limit, but shall be reinstituted whenever the five percent level is exceeded.

(s) Whenever 10 percent or more of the lower explosive limit for methane or other flammable gases is detected in the vicinity of welding, cutting, or other hot work, such work shall be suspended until the concentration of such flammable gas is reduced to less than 10 percent of the lower explosive limit.

(t) Whenever 20 percent or more of the lower explosive limit for methane or other flammable gases is detected in any underground work area(s) or in the air return:

(i) All employees, except those necessary to eliminate the hazard, shall be immediately withdrawn to a safe location above ground; and

(ii) Employees who remain underground to correct or eliminate the hazard described in (t) above shall be equipped with approved, pressure demand mode, self-contained breathing apparatus, and shall have received adequate training in the proper use of that equipment.

(iii) Electrical power, except for acceptable pumping and ventilation equipment, shall be cut off to the area endangered by the flammable gas until the concentration of such gas is reduced to less than 20 percent of the lower explosive limit.

(14) Additional monitoring for potentially gassy and gassy operations. Operations which meet the criteria for potentially gassy and gassy operations set forth in subsection (13) of this section shall be subject to the additional monitoring requirements of this subsection.

(a) A test for oxygen content shall be conducted in the affected underground work areas and work areas immediately adjacent to such areas at least at the beginning and midpoint of each shift.

(b) When using rapid excavation machines, continuous automatic flammable gas monitoring equipment shall be used to monitor the air at the heading, on the rib, and in the return air duct. The continuous monitor shall signal the heading, and shut down electric power in the affected underground work area, except for acceptable pumping and ventilation equipment, when 20 percent or more of the lower explosive limit for methane or other flammable gases is encountered.

(i) A manual flammable gas monitor shall be used as needed, but at least at the beginning and midpoint of each shift, to ensure that the limits prescribed in subsections (11) and (13) of this section are not exceeded. In addition, a manual electrical shut down control shall be provided near the heading.

(ii) Local gas tests shall be made prior to and continuously during any welding, cutting, or other hot work.

(iii) In underground operations driven by drill-and-blast methods, the air in the affected area shall be tested for flammable gas prior to re-entry after blasting, and continuously when employees are working underground.

(c) Recordkeeping. A record of all air quality tests shall be maintained above ground at the worksite and be made available to the director or his/her representatives upon request. The record shall include the location, date, time, substance and amount monitored. Records of exposures to toxic substances shall be retained in accordance with Part B, chapter 296-62 WAC. All other air quality test records shall be retained until completion of the project.

(15) Ventilation.

(a)(i) Fresh air shall be supplied to all underground work areas in sufficient quantities to prevent dangerous or harmful accumulation of dust, fumes, mists, vapors, or gases.

(ii) Mechanical ventilation shall be provided in all underground work areas except when the employer can demonstrate that natural ventilation provides the necessary air quality through sufficient air volume and air flow.

(b) A minimum of 200 cubic feet (5.7 m^3) of fresh air per minute shall be supplied for each employee underground.

(c) The linear velocity of air flow in the tunnel bore, in shafts, and in all other underground work areas shall be at least 30 feet (9.15 m) per minute where blasting or rock drilling is conducted, or where other conditions likely to produce dust, fumes, mists, vapors, or gases in harmful or explosive quantities are present.

(d) The direction of mechanical air flow shall be reversible.

(e) Air that has passed through underground oil or fuel-storage areas shall not be used to ventilate working areas.

(f) Following blasting, ventilation systems shall exhaust smoke and fumes to the outside atmosphere before work is resumed in affected areas.

(g) Ventilation doors shall be designed and installed so that they remain closed when in use, regardless of the direction of the air flow.

(h) When ventilation has been reduced to the extent that hazardous levels of methane or flammable gas may have accumulated, a competent person shall test all affected areas after ventilation has been restored and shall determine whether the atmosphere is within flammable limits before any power, other than for acceptable equipment, is restored or work is resumed.

(i) Whenever the ventilation system has been shut down with all employees out of the underground area, only competent persons authorized to test for air contaminants shall be allowed underground until the ventilation has been restored and all affected areas have been tested for air contaminants and declared safe.

(j) When drilling rock or concrete, appropriate dust control measures shall be taken to maintain dust levels within limits set in chapter 296-155 WAC, Part B-1. Such measures may include, but are not limited to, wet drilling, the use of vacuum collectors, and water mix spray systems.

(k)(i) Internal combustion engines, except diesel-powered engines on mobile equipment, are prohibited underground.

(ii) Mobile diesel-powered equipment used underground in atmospheres other than gassy operations shall be either approved by MSHA in accordance with the provisions of 30 C.F.R. Part 32 (formerly Schedule 24), or shall be demonstrated by the employer to be fully equivalent to such MSHA-approved equipment, and shall be operated in accordance with that Part. (Each brake horsepower of a diesel engine requires at least 100 cubic feet (28.32 m^3) of air per minute for suitable operation in addition to the air requirements for personnel. Some engines may require a greater amount of air to ensure that the allowable levels of carbon monoxide, nitric oxide, and nitrogen dioxide are not exceeded.)

(iii) Application shall be made to the mining/explosives section, department of labor and industries, for permission to use specified diesel equipment in a specified underground area and shall include the following:

(A) The type of construction and complete identification data and specifications including analysis of the undiluted exhaust gases of the diesel equipment.

(B) The location where the diesel equipment is to be used.

(C) Before the diesel equipment is taken underground, written permission shall be obtained from the department of labor and industries or its duly authorized representative. A satisfactory test on surface, to show that the exhaust gases do not exceed the maximum percentage of carbon monoxide permitted, shall be required.

(D) Diesel equipment shall only be used underground where the ventilation is controlled by mechanical means and shall not be operated if the ventilating current is less than 100 CFM per horsepower based on the maximum brake horsepower of the engines.

(E) Air measurements shall be made at least once daily in the diesel engine working area and the measurements entered in the Underground Diesel Engine Record Book. Permissible maximum amounts of noxious gases are as follows:

At engine exhaust ports	Carbon Monoxide	.10%	1,000 ppm[3]
Next to equipment	Carbon Monoxide	.0035%	35 ppm
General atmosphere	Carbon Monoxide	.0035%	35 ppm
General atmosphere	Nitrogen Dioxide	.0001%	1 ppm
General atmosphere	Aldehydes	.0002%	2 ppm

[3]Parts of vapor or gas per million parts of contaminated air by volume at 25°C and 760 mm Hg. pressure.

(l) Potentially gassy or gassy operations shall have ventilation systems installed which shall:

(i) Be constructed of fire-resistant materials; and

(ii) Have acceptable electrical systems, including fan motors.

(m) Gassy operations shall be provided with controls located aboveground for reversing the air flow of ventilation systems.

(n) In potentially gassy or gassy operations, wherever mine-type ventilation systems using an offset main fan installed on the surface are used, they shall be equipped with explosion-doors or a weak-wall having an area at least equivalent to the cross-sectional area of the airway.

(16) Illumination.

(a) Sufficient lighting shall be provided, in accordance with the requirements of chapter 296-155 WAC, Part B-1, to permit safe operations at the face as well as in the general tunnel or shaft area and at the employees' workplace.

(b) Only acceptable portable lighting shall be used within 50 feet (15.24 m) of any underground heading during explosive handling.

(17) Fire prevention and control. Fire prevention and protection requirements applicable to underground construction operations are found in Part D of this chapter except as modified by the following additional standards.

(a) Open flames and fires are prohibited in all underground construction operations except as permitted for welding, cutting, and other hot work operations.

(i) Smoking may be allowed only in areas free of fire and explosion hazards.

(ii) Readily visible signs prohibiting smoking and open flames shall be posted in areas having fire or explosion hazards.

(iii) The carrying of matches, lighters, or other flame-producing smoking materials shall be prohibited in all underground operations where fire or explosion hazards exist.

(b) The employer may store underground no more than a 24-hour supply of diesel fuel for the underground equipment used at the worksite.

(c) The piping of diesel fuel from the surface to an underground location is permitted only if:

(i) Diesel fuel is contained at the surface in a tank whose maximum capacity is no more than the amount of fuel required to supply for a 24-hour period the equipment serviced by the underground fueling station; and

(ii) The surface tank is connected to the underground fueling station by an acceptable pipe or hose system that is

controlled at the surface by a valve, and at the shaft bottom by a hose nozzle; and

(iii) The pipe is empty at all times except when transferring diesel fuel from the surface tank to a piece of equipment in use underground; and

(iv) Hoisting operations in the shaft are suspended during refueling operations if the supply piping in the shaft is not protected from damage.

(d)(i) Gasoline shall not be carried, stored, or used underground.

(ii) Acetylene, liquefied petroleum gas, and methylacetylene propadiene stabilized gas may be used underground only for welding, cutting and other hot work, and only in accordance with Part H of this chapter and subsections (13), (15), (17), and (18) of this section.

(e) Oil, grease, and diesel fuel stored underground shall be kept in tightly sealed containers in fire-resistant areas at least 300 feet (91.44 m) from underground explosive magazines, and at least 100 feet (30.48 m) from shaft stations and steeply inclined passageways. Storage areas shall be positioned or diked so that the contents of ruptured or overturned containers will not flow from the storage area.

(f) Flammable or combustible materials shall not be stored above ground within 100 feet (30.48 m) of any access opening to any underground operation. Where this is not feasible because of space limitations at the job site, such materials may be located within the 100-foot limit, provided that:

(i) They are located as far as practicable from the opening; and

(ii) Either a fire-resistant barrier of not less than one-hour rating is placed between the stored material and the opening, or additional precautions are taken which will protect the materials from ignition sources.

(g) Fire-resistant hydraulic fluids shall be used in hydraulically actuated underground machinery and equipment unless such equipment is protected by a fire suppression system or by multipurpose fire extinguisher(s) rated at a sufficient capacity for the type and size of hydraulic equipment involved, but rated at least 4A:4OB:C.

(h)(i) Electrical installations in underground areas where oil, grease, or diesel fuel are stored shall be used only for lighting fixtures.

(ii) Lighting fixtures in storage areas, or within 25 feet (7.62 m) of underground areas where oil, grease, or diesel fuel are stored, shall be approved for Class I, Division 2 locations, in accordance with Part I of this chapter.

(i) Leaks and spills of flammable or combustible fluids shall be cleaned up immediately.

(j) A fire extinguisher of at least 4A:4OB:C rating or other equivalent extinguishing means shall be provided at the head pulley and at the tail pulley of underground belt conveyors, and at 300-foot intervals along the belt.

(k) Any structure located underground or within 100 feet (30.48 m) of an opening to the underground shall be constructed of material having a fire-resistance rating of at least one hour.

(18) Welding, cutting, and other hot work. In addition to the requirements of Part H of this chapter, the following requirements shall apply to underground welding, cutting, and other hot work.

(a) No more than the amount of fuel gas and oxygen cylinders necessary to perform welding, cutting, or other hot work during the next 24-hour period shall be permitted underground.

(b) Noncombustible barriers shall be installed below welding, cutting, or other hot work being done in or over a shaft or raise.

(19) Ground support.

(a) In tunnels (other than hard rock) timber sets, steel rings, steel frames, concrete liners, or other engineered tunnel support systems shall be used. Every tunnel support system shall be designed by a licensed professional engineer. Design specifications shall be available at the worksite.

(b) Portal areas. Portal openings and access areas shall be guarded by shoring, fencing, head walls, shotcreting, or other equivalent protection to ensure safe access of employees and equipment. Adjacent areas shall be scaled or otherwise secured to prevent loose soil, rock, or fractured materials from endangering the portal and access area.

(c) Subsidence areas. The employer shall ensure ground stability in hazardous subsidence areas by shoring, by filling in, or by erecting barricades and posting warning signs to prevent entry.

(d) Underground areas.

(i)(A) A competent person shall inspect the roof, face, and walls of the work area at the start of each shift and as often as necessary to determine ground stability.

(B) Competent persons conducting such inspections shall be protected from loose ground by location, ground support, or equivalent means.

(ii) Ground conditions along haulageways and travelways shall be inspected as frequently as necessary to ensure safe passage.

(iii) Loose ground that might be hazardous to employees shall be taken down, scaled, or supported.

(iv) Torque wrenches shall be used wherever bolts that depend on torsionally applied force are used for ground support.

(v) A competent person shall determine whether rock bolts meet the necessary torque, and shall determine the testing frequency in light of the bolt system, ground conditions, and the distance from vibration sources.

(vi) Suitable protection shall be provided for employees exposed to the hazard of loose ground while installing ground support systems.

(vii) Support sets shall be installed so that the bottoms have sufficient anchorage to prevent ground pressures from dislodging the support base of the sets. Lateral bracing (collar bracing, tie rods, or spreaders) shall be provided between immediately adjacent sets to ensure added stability.

(viii) Damaged or dislodged ground supports that create a hazardous condition shall be promptly repaired or replaced. When replacing supports, the new supports shall be installed before the damaged supports are removed.

(ix) A shield or other type of support shall be used to maintain a safe travelway for employees working in dead-end areas ahead of any support replacement operation.

(e) Shafts.

(i) Shafts and wells over 4 feet (1.219 m) in depth that employees must enter shall be supported by a steel casing, concrete pipe, timber, solid rock, or other suitable material.

(ii)(A) The full depth of the shaft shall be supported by casing or bracing except where the shaft penetrates into solid rock having characteristics that will not change as a result of exposure. Where the shaft passes through earth into solid rock, or through solid rock into earth, and where there is potential for shear, the casing or bracing shall extend at least 5 feet (1.53 m) into the solid rock. When the shaft terminates in solid rock, the casing or bracing shall extend to the end of the shaft or 5 feet (1.53 m) into the solid rock, whichever is less.

(B) The casing or bracing shall extend 42 inches (1.07 m) plus or minus 3 inches (8 cm) above ground level, except that the minimum casing height may be reduced to 12 inches (0.3 m), provided that a standard railing is installed; that the ground adjacent to the top of the shaft is sloped away from the shaft collar to prevent entry of liquids; and that effective barriers are used to prevent mobile equipment operating near the shaft from jumping over the 12-inch (0.3 m) barrier.

(iii) After blasting operations in shafts, a competent person shall determine if the walls, ladders, timbers, blocking, or wedges have loosened. If so, necessary repairs shall be made before employees other than those assigned to make the repairs are allowed in or below the affected areas.

(f) Blasting. This subsection applies in addition to the requirements for blasting and explosives operations, including handling of misfires, which are found in chapter 296-52 WAC.

(i) Blasting wires shall be kept clear of electrical lines, pipes, rails, and other conductive material, excluding earth, to prevent explosives initiation or employee exposure to electric current.

(ii) Following blasting, an employee shall not enter a work area until the air quality meets the requirements of subsection (13) of this section.

(g) Drilling.

(i) A competent person shall inspect all drilling and associated equipment prior to each use. Equipment defects affecting safety shall be corrected before the equipment is used.

(ii) The drilling area shall be inspected for hazards before the drilling operation is started.

(iii) Employees shall not be allowed on a drill mast while the drill bit is in operation or the drill machine is being moved.

(iv) When a drill machine is being moved from one drilling area to another, drill steel, tools, and other equipment shall be secured and the mast shall be placed in a safe position.

(v) Receptacles or racks shall be provided for storing drill steel located on jumbos.

(vi) Employees working below jumbo decks shall be warned whenever drilling is about to begin.

(vii) Drills on columns shall be anchored firmly before starting drilling, and shall be retightened as necessary thereafter.

(viii) The employer shall provide mechanical means on the top deck of a jumbo for lifting unwieldy or heavy material.

(ix) When jumbo decks are over 10 feet (3.05 m) in height, the employer shall install stairs wide enough for two persons.

(x) Jumbo decks more than 10 feet (3.05 m) in height shall be equipped with guardrails on all open sides, excluding access openings of platforms, unless an adjacent surface provides equivalent fall protection.

(xi) Only employees assisting the operator shall be allowed to ride on jumbos, unless the jumbo meets the requirements of subsection (20)(e) of this section.

Note: For additional requirements relating to portable fire extinguishers see WAC 296-800-300.

(xii) Jumbos shall be chocked to prevent movement while employees are working on them.

(xiii) Walking and working surfaces of jumbos shall be maintained to prevent the hazards of slipping, tripping, and falling.

(xiv) Jumbo decks and stair treads shall be designed to be slip-resistant and secured to prevent accidental displacement.

(xv) Scaling bars shall be available at scaling operations and shall be maintained in good condition at all times. Blunted or severely worn bars shall not be used.

(xvi) Before commencing the drill cycle, the face and lifters shall be examined for misfires (residual explosives) and, if found, they shall be removed before drilling commences at the face. Blasting holes shall not be drilled through blasted rock (muck) or water.

(xvii) Employees in a shaft shall be protected either by location or by suitable barrier(s) if powered mechanical loading equipment is used to remove muck containing unfired explosives.

(xviii) A caution sign reading "buried line," or similar wording shall be posted where air lines are buried or otherwise hidden by water or debris.

(20) Haulage.

(a) A competent person shall inspect haulage equipment before each shift.

(i) Equipment defects affecting safety and health shall be corrected before the equipment is used.

(ii) Powered mobile haulage equipment shall be provided with adequate brakes.

(iii) Power mobile haulage equipment, including trains, shall have audible warning devices to warn employees to stay clear. The operator shall sound the warning device before moving the equipment and whenever necessary during travel.

(iv) The operator shall assure that lights which are visible to employees at both ends of any mobile equipment, including a train, are turned on whenever the equipment is operating.

(v) In those cabs where glazing is used, the glass shall be safety glass, or its equivalent, and shall be maintained and cleaned so that vision is not obstructed.

(b) Antirollback devices or brakes shall be installed on inclined conveyor drive units to prevent conveyors from inadvertently running in reverse. Employees shall not be permitted to ride a power-driven chain, belt, or bucket conveyor unless the conveyor is specifically designed for the transportation of persons.

(c) Endless belt-type manlifts are prohibited in underground construction.

(d) General requirements also applicable to underground construction for use of conveyors in construction are found in chapter 296-155 WAC, Part R.

(e) No employee shall ride haulage equipment unless it is equipped with seating for each passenger and protects passengers from being struck, crushed, or caught between other equipment or surfaces. Members of train crews may ride on a locomotive if it is equipped with handholds and nonslip steps or footboards. Requirements applicable to underground construction for motor vehicle transportation of employees are found in chapter 296-155 WAC, Part M.

(f) Conveyor lockout.

(i) Conveyors shall be deenergized and locked out with a padlock, and tagged out with a "Do Not Operate" tag at any time repair, maintenance, or clean-up work is being performed on the conveyor.

(ii) Tags or push button stops are not acceptable.

(iii) Persons shall not be allowed to walk on conveyors except for emergency purposes and then only after the conveyor has been deenergized and locked out in accordance with (f) above, and persons can do so safely.

(g) Powered mobile haulage equipment, including trains, shall not be left unattended unless the master switch or motor is turned off; operating controls are in neutral or park position; and the brakes are set, or equivalent precautions are taken to prevent rolling.

(h) Whenever rails serve as a return for a trolley circuit, both rails shall be bonded at every joint and crossbonded every 200 feet (60.96 m).

(i) When dumping cars by hand, the car dumps shall have tiedown chains, bumper blocks, or other locking or holding devices to prevent the cars from overturning.

(j) Rocker-bottom or bottom-dump cars shall be equipped with positive locking devices to prevent unintended dumping.

(k) Equipment to be hauled shall be loaded and secured to prevent sliding or dislodgement.

(l)(i) Mobile equipment, including rail-mounted equipment, shall be stopped for manual connecting or service work, and;

(ii) Employees shall not reach between moving cars during coupling operations.

(iii) Couplings shall not be aligned, shifted, or cleaned on moving cars or locomotives.

(iv) Safety chains or other connections shall be used in addition to couplers to connect person cars or powder cars whenever the locomotive is uphill of the cars.

(v) When the grade exceeds one percent and there is a potential for runaway cars, safety chains or other connections shall be used in addition to couplers to connect haulage cars or, as an alternative, the locomotive must be downhill of the train.

(vi) Such safety chains or other connections shall be capable of maintaining connection between cars in the event of either coupler disconnect, failure or breakage.

(m) Parked rail equipment shall be chocked, blocked, or have brakes set to prevent inadvertent movement.

(n) Berms, bumper blocks, safety hooks, or equivalent means shall be provided to prevent overtravel and overturning of haulage equipment at dumping locations.

(o) Bumper blocks or equivalent stopping devices shall be provided at all track dead ends.

(p)(i) Only small handtools, lunch pails, or similar small items may be transported with employees in person cars, or on top of a locomotive.

(ii) When small hand tools or other small items are carried on top of a locomotive, the top shall be designed or modified to retain them while traveling.

(q)(i) Where switching facilities are available, occupied personnel cars shall be pulled, not pushed. If personnel cars must be pushed and visibility of the track ahead is hampered, then a qualified person shall be stationed in the lead car to give signals to the locomotive operator.

(ii) Crew trips shall consist of personnel loads only.

(21) Electrical safety. This subsection applies in addition to the general requirements for electrical safety which are found in Part I of this chapter.

(a) Electric power lines shall be insulated or located away from water lines, telephone lines, air lines, or other conductive materials so that a damaged circuit will not energize the other systems.

(b) Lighting circuits shall be located so that movement of personnel or equipment will not damage the circuits or disrupt service.

(c) Oil-filled transformers shall not be used underground unless they are located in a fire-resistant enclosure suitably vented to the outside and surrounded by a dike to retain the contents of the transformers in the event of rupture.

(22) Hoisting unique to underground construction except as modified by this section, the provisions of chapter 296-155 WAC, Part L apply. Requirements for personnel hoists, material hoists, and elevators are found in Part R of this chapter and in this subsection.

(a) General requirements for cranes and hoists.

(i) Materials, tools, and supplies being raised or lowered, whether within a cage or otherwise, shall be secured or stacked in a manner to prevent the load from shifting, snagging, or falling into the shaft.

(ii) A warning light suitably located to warn employees at the shaft bottom and subsurface shaft entrances shall flash whenever a load is above the shaft bottom or subsurface entrances, or the load is being moved in the shaft. This subsection does not apply to fully enclosed hoistways.

(iii) Whenever a hoistway is not fully enclosed and employees are at the shaft bottom, conveyances or equipment shall be stopped at least 15 feet (4.57 m) above the bottom of the shaft and held there until the signalperson at the bottom of the shaft directs the operator to continue lowering the load, except that the load may be lowered without stopping if the load or conveyance is within full view of a bottom signalperson who is in constant voice communication with the operator.

(iv)(A) Before maintenance, repairs, or other work is commenced in the shaft served by a cage, skip, or bucket, the operator and other employees in the area shall be informed and given suitable instructions.

(B) A sign warning that work is being done in the shaft shall be installed at the shaft collar, at the operator's station, and at each underground landing.

(v) Any connection between the hoisting rope and the cage or skip shall be compatible with the type of wire rope used for hoisting.

(vi) Spin-type connections, where used, shall be maintained in a clean condition and protected from foreign matter that could affect their operation.

(vii) Cage, skip, and load connections to the hoist rope shall be made so that the force of the hoist pull, vibration, misalignment, release of lift force, or impact will not disengage the connection. Only closed shackles shall be used for cage and skip rigging.

(viii) When using wire rope wedge sockets, means shall be provided to prevent wedge escapement and to ensure that the wedge is properly seated.

(b) Additional requirements for cranes. Cranes shall be equipped with a limit switch to prevent overtravel at the boom tip. Limit switches are to be used only to limit travel of loads when operational controls malfunction and shall not be used as a substitute for other operational controls.

(c) Additional requirements for hoists.

(i) Hoists shall be designed so that the load hoist drum is powered in both directions of rotation, and so that brakes are automatically applied upon power release or failure.

(ii) Control levers shall be of the "deadman type" which return automatically to their center (neutral) position upon release.

(iii) When a hoist is used for both personnel hoisting and material hoisting, load and speed ratings for personnel and for materials shall be assigned to the equipment.

(iv) Hoist machines with cast metal parts shall not be used.

(v) Material hoisting may be performed at speeds higher than the rated speed for personnel hoisting if the hoist and components have been designed for such higher speeds and if shaft conditions permit.

(vi) Employees shall not ride on top of any cage, skip, or bucket except when necessary to perform inspection or maintenance of the hoisting system, in which case they shall be protected by a body belt/harness system to prevent falling.

(vii) Personnel and materials (other than small tools and supplies secured in a manner that will not create a hazard to employees) shall not be hoisted together in the same conveyance. However, if the operator is protected from the shifting of materials, then the operator may ride with materials in cages or skips which are designed to be controlled by an operator within the cage or skip.

(viii) Line speed shall not exceed the design limitations of the systems.

(ix) Hoists shall be equipped with landing level indicators at the operator's station. Marking of the hoist rope does not satisfy this requirement.

(x) Whenever glazing is used in the hoist house, it shall be safety glass, or its equivalent, and be free of distortions and obstructions.

(xi) A fire extinguisher that is rated at least 2A:10B:C (multipurpose, dry chemical) shall be mounted in each hoist house.

(xii) Hoist controls shall be arranged so that the operator can perform all operating cycle functions and reach the emergency power cutoff without having to reach beyond the operator's normal operating position.

(xiii) Hoists shall be equipped with limit switches to prevent overtravel at the top and bottom of the hoistway.

(xiv) Limit switches are to be used only to limit travel of loads when operational controls malfunction and shall not be used as a substitute for other operational controls.

(xv) Hoist operators shall be provided with a closed-circuit voice communication system to each landing station, with speaker-microphones so located that the operator can communicate with individual landing stations during hoist use.

(xvi) When sinking shafts 75 feet (22.86 m) or less in depth, cages, skips, and buckets that may swing, bump, or snag against shaft sides or other structural protrusions shall be guided by fenders, rails, ropes, or a combination of those means.

(xvii) When sinking shafts more than 75 feet (22.86 m) in depth, all cages, skips, and buckets shall be rope or rail-guided to within a rail length from the sinking operation.

(xviii) Cages, skips, and buckets in all completed shafts, or in all shafts being used as completed shafts, shall be rope or rail-guided for the full length of their travel.

(xix) Wire rope used in load lines of material hoists shall be capable of supporting, without failure, at least five times the maximum intended load or the factor recommended by the rope manufacturer, whichever is greater. Refer to chapter 296-155 WAC, Part R, for design factors for wire rope used in personnel hoists. The design factors shall be calculated by dividing the breaking strength of wire rope, as reported in the manufacturer's rating tables, by the total static load, including the weight of the wire rope in the shaft when fully extended.

(xx) A competent person shall visually check all hoisting machinery, equipment, anchorages, and hoisting rope at the beginning of each shift and during hoist use, as necessary.

(xxi) Each safety device shall be checked by a competent person at least weekly during hoist use to ensure suitable operation and safe condition.

(xxii) In order to ensure suitable operation and safe condition of all functions and safety devices, each hoist assembly shall be inspected and load-tested to 100 percent of its rated capacity: At the time of installation; after any repairs or alterations affecting its structural integrity; after the operation of any safety device; and annually when in use. The employer shall prepare a certification record which includes the date each inspection and load-test was performed; the signature of the person who performed the inspection and test; and a serial number or other identifier for the hoist that was inspected and tested. The most recent certification record shall be maintained on file until completion of the project.

(xxiii) Before hoisting personnel or material, the operator shall perform a test run of any cage or skip whenever it has been out of service for one complete shift, and whenever the assembly or components have been repaired or adjusted.

(xiv) Unsafe conditions shall be corrected before using the equipment.

(d) Additional requirements for personnel hoists.

(i) Hoist drum systems shall be equipped with at least two means of stopping the load, each of which shall be capable of stopping and holding 150 percent of the hoist's rated line pull. A broken-rope safety, safety catch, or arrestment device is not a permissible means of stopping under this subsection.

(ii) The operator shall remain within sight and sound of the signals at the operator's station.

(iii) All sides of personnel cages shall be enclosed by one-half inch (12.70 mm) wire mesh (not less than No. 14 gauge or equivalent) to a height of not less than 6 feet (1.83 m). However, when the cage or skip is being used as a work platform, its sides may be reduced in height to 42 inches (1.07 m) when the conveyance is not in motion.

(iv) All personnel cages shall be provided with a positive locking door that does not open outward.

(v) All personnel cages shall be provided with a protective canopy. The canopy shall be made of steel plate, at least 3/16 -inch (4.763 mm) in thickness, or material of equivalent strength and impact resistance. The canopy shall be sloped to the outside, and so designed that a section may be readily pushed upward to afford emergency egress. The canopy shall cover the top in such a manner as to protect those inside from objects falling in the shaft.

(vi) Personnel platforms operating on guide rails or guide ropes shall be equipped with broken-rope safety devices, safety catches, or arrestment devices that will stop and hold 150 percent of the weight of the personnel platform and its maximum rated load.

(vii) During sinking operations in shafts where guides and safeties are not yet used, the travel speed of the personnel platform shall not exceed 200 feet (60.96 m) per minute. Governor controls set for 200 feet (60.96 m) per minute shall be installed in the control system and shall be used during personnel hoisting.

(viii) The personnel platform may travel over the controlled length of the hoistway at rated speeds up to 600 feet (182.88 m) per minute during sinking operations in shafts where guides and safeties are used.

(ix) The personnel platform may travel at rated speeds greater than 600 feet (182.88 m) per minute in complete shafts.

[Statutory Authority: RCW 49.17.010, 49.17.040, 49.17.050, 49.17.440, 49.17.060, and 29 C.F.R. 1926, Subpart CC. WSR 12-01-086, § 296-155-730, filed 12/20/11, effective 2/1/12. Statutory Authority: RCW 49.17.010, 49.17.040, 49.17.050, 49.17.060. WSR 05-03-093, § 296-155-730, filed 1/18/05, effective 3/1/05. Statutory Authority: RCW 49.17.010, [49.17].040, and [49.17].050. WSR 01-17-033, § 296-155-730, filed 8/8/01, effective 9/1/01; WSR 99-10-071, § 296-155-730, filed 5/4/99, effective 9/1/99. Statutory Authority: RCW 49.17.010, [49.17].040, [49.17].050 and [49.17].060. WSR 98-05-046, § 296-155-730, filed 2/13/98, effective 4/15/98. Statutory Authority: Chapter 49.17 RCW. WSR 95-04-007, § 296-155-730, filed 1/18/95, effective 3/1/95; WSR 94-15-096 (Order 94-07), § 296-155-730, filed 7/20/94, effective 9/20/94; WSR 91-11-070 (Order 91-01), § 296-155-730, filed 5/20/91, effective 6/20/91; WSR 90-03-029 (Order 89-20), § 296-155-730, filed 1/11/90, effective 2/26/90. Statutory Authority: RCW 49.17.040 and 49.17.050. WSR 86-03-074 (Order 86-14), § 296-155-730, filed 1/21/86; Order 76-29, § 296-155-730, filed 9/30/76; Order 74-26, § 296-155-730, filed 5/7/74, effective 6/6/74.]

WAC 296-155-735 Caissons. (1) Wherever, in caisson work in which compressed air is used, and the working chamber is less than 11 feet in length, and when such caissons are at any time suspended or hung while work is in progress so that the bottom of the excavation is more than 9 feet below the deck of the working chamber, a shield shall be erected therein for the protection of the employees.

(2) Shafts shall be subjected to a hydrostatic or airpressure test, at which pressure they shall be tight. The shaft shall be stamped on the outside shell about 12 inches from each flange to show the pressure to which they have been subjected.

(3) Whenever a shaft is used, it shall be provided, where space permits, with a safe, proper, and suitable staircase for its entire length, including landing platforms, not more than 20 feet apart. Where this is impracticable, suitable ladders shall be installed with landing platforms located about 20 feet apart to break the climb.

(4) All caissons, having a diameter or side greater than 10 feet shall be provided with a man lock and shaft for the exclusive use of employees.

(5) In addition to the gauge in the locks, an accurate gauge shall be maintained on the outer and inner side of each bulkhead. These gauges shall be accessible at all times and kept in accurate working order.

(6) In caisson operations where employees are exposed to compressed air working environments, the requirements contained in WAC 296-155-745 shall be complied with.

[Order 74-26, § 296-155-735, filed 5/7/74, effective 6/6/74.]

WAC 296-155-740 Cofferdams. (1) If overtopping of the cofferdam by high waters is possible, means shall be provided for controlled flooding of the work area.

(2) Warning signals for evacuation of employees in case of emergency shall be developed and posted.

(3) Cofferdam walkways, bridges, or ramps with at least two means of rapid exit, shall be provided with guardrails as specified in Part C-1 of this chapter.

(4) Manways and ladderways shall be installed separately from the hoistways and partitioned off to prevent hoisted materials from protruding into or falling into manways and/or ladderways.

(5) Pumping equipment shall be located on substantially constructed platforms and where installed in such a position that persons must work below, toe boards shall be installed on the platform.

(6) Cofferdams located close to navigable shipping channels shall be protected from vessels in transit, where possible.

[Statutory Authority: RCW 49.17.010, 49.17.040, 49.17.050, 49.17.060 and 29 C.F.R. 1926, Subpart M, Fall Protection. WSR 13-04-073, § 296-155-740, filed 2/4/13, effective 4/1/13. Statutory Authority: RCW 49.17.040, [49.17.]050 and [49.17.]060. WSR 96-24-051, § 296-155-740, filed 11/27/96, effective 2/1/97. Statutory Authority: Chapter 49.17 RCW. WSR 95-10-016, § 296-155-740, filed 4/25/95, effective 10/1/95; Order 74-26, § 296-155-740, filed 5/7/74, effective 6/6/74.]

WAC 296-155-745 Compressed air. (1) General provisions.

(a) There shall be present, at all times, at least one competent person designated by and representing the employer, who shall be familiar with this part in all respects and responsible for full compliance with these and other applicable parts.

(b) Every employee shall be instructed in the rules and regulations which concern their safety or the safety of others.

(2) Medical attendance, examination, and regulations.

(a) There shall be retained one or more licensed physicians familiar with and experienced in the physical requirements and the medical aspects of compressed air work and the treatment of decompression illness. They shall be available at all times while work is in progress in order to provide medical supervision of employees employed in compressed air work. They shall be physically qualified and be willing to enter a pressurized environment.

(b) No employee shall be permitted to enter a compressed air environment until they have been examined by the physician and reported to be physically qualified to engage in such work.

(c) In the event an employee is absent from work for 10 days, or is absent due to sickness or injury, they shall not resume work until they are reexamined by the physician, and their physical condition reported, as provided in this subsection, to be such as to permit them to work in compressed air.

(d) After an employee has been employed continuously in compressed air for a period designated by the physician, but not to exceed 1 year, the employee shall be reexamined by the physician to determine if they are still physically qualified to engage in compressed air work.

(e) Such physician shall at all times keep a complete and full record of examinations made by themselves. The physician shall also keep an accurate record of any decompression illness or other illness or injury incapacitating any employee for work, and of all loss of life that occurs in the operation of a tunnel, caisson, or other compartment in which compressed air is used.

(f) Records shall be available for the inspection by the director or his/her representatives, and a copy thereof shall be forwarded to the department within 48 hours following the occurrence of the accident, death, injury, or decompression illness. It shall state as fully as possible the cause of said death or decompression illness, and the place where the injured or sick employee was taken, and such other relative information as may be required by the director.

(g) A fully equipped first-aid station shall be provided at each tunnel project regardless of the number of persons employed. An ambulance or transportation suitable for a litter case shall be at each project.

(h) Where tunnels are being excavated from portals more than 5 road miles apart, a first-aid station and transportation facilities shall be provided at each portal.

(i) A medical lock shall be established and maintained in immediate working order whenever air pressure in the working chamber is increased above the normal atmosphere.

(j) The medical lock shall:

(i) Have at least 6 feet of clear headroom at the center, and be subdivided into not less than two compartments;

(ii) Be readily accessible to employees working under compressed air;

(iii) Be kept ready for immediate use for at least 5 hours subsequent to the emergence of any employee from the working chamber;

(iv) Be properly heated, lighted and ventilated;

(v) Be maintained in a sanitary condition;

(vi) Have a nonshatterable port through which the occupant(s) may be kept under constant observation;

(vii) Be designed for a working pressure of 75 p.s.i.g.;

(viii) Be equipped with internal controls which may be overridden by external controls;

(ix) Be provided with air pressure gauges to show the air pressure within each compartment to observers inside and outside the medical lock;

(x) Be equipped with a manual type sprinkler system that can be activated inside the lock or by the outside lock tender;

(xi) Be provided with oxygen lines and fittings leading into external tanks. The lines shall be fitted with check valves to prevent reverse flow. The oxygen system inside the chamber shall be of a closed circuit design and be so designed as to automatically shut off the oxygen supply whenever the fire system is activated.

(xii) Be in constant charge of an attendant under the direct control of the retained physician. The attendant shall be trained in the use of the lock and suitably instructed regarding steps to be taken in the treatment of employee exhibiting symptoms compatible with a diagnosis of decompression illness;

(xiii) Be adjacent to an adequate emergency medical facility;

(xiv) The medical facility shall be equipped with demand-type oxygen inhalation equipment approved by the U.S. Bureau of Mines or Mine Safety and Health Administration (MSHA) and the National Institute for Occupational Safety and Health (NIOSH);

(xv) Be capable of being maintained at a temperature, in use, not to exceed 90°F. nor be less than 70°F.; and

(xvi) Be provided with sources of air, free of oil and carbon monoxide, for normal and emergency use, which are capable of raising the air pressure in the lock from 0 to 75 p.s.i.g. in 5 minutes.

(k) Identification badges shall be furnished to all employees, indicating that the wearer is a compressed air worker. A permanent record shall be kept of all identification badges issued. The badge shall give the employee's name, address of the medical lock, the telephone number of the licensed physician for the compressed air project, and contain instructions that in case of emergency of unknown or doubtful cause or illness, the wearer shall be rushed to the medical lock. The badge shall be worn at all times—off the job, as well as on the job.

(3) Telephone and signal communication. Effective and reliable means of communication, such as bells, whistles, or telephones, shall be maintained at all times between all the following locations;

(a) The working chamber face;

(b) The working chamber side of the man lock near the door;

(c) The interior of the man lock;

(d) Lock attendant's station;

(e) The compressor plant;

(f) The first-aid station;

(g) The emergency lock (if one is required); and

(h) The special decompression chamber (if one is required).

(4) Signs and records.

(a) The time of decompression shall be posted in each man lock as follows:

TIME OF DECOMPRESSION FOR THIS LOCK

. . . . . pounds to . . . . . pounds in . . . . . minutes.

. . . . . pounds to . . . . . pounds in . . . . . minutes.

(Signed by) . . . . . .

(Superintendent)

This form shall be posted in the man lock at all times.

(b) Any code of signals used shall be conspicuously posted near workplace entrances and such other locations as may be necessary to bring them to the attention of all employees concerned.

(c) For each 8-hour shift, a record of employees employed under air pressure shall be kept by an employee who shall remain outside the lock near the entrance. This record shall show the period each employee spends in the air chamber and the time taken from decompression. A copy shall be submitted to the appointed physician after each shift.

(5) Compression.

(a) Every employee going under air pressure for the first time shall be instructed on how to avoid excessive discomfort.

(b) During the compression of employees, the pressure shall not be increased to more than 3 p.s.i.g. within the first minute. The pressure shall be held at 3 p.s.i.g. and again at 7 p.s.i.g. sufficiently long to determine if any employees are experiencing discomfort.

(c) After the first minute the pressure shall be raised uniformly and at a rate not to exceed 10 p.s.i. per minute.

(d) If any employee complains of discomfort, the pressure shall be held to determine if the symptoms are relieved. If, after 5 minutes the discomfort does not disappear, the lock attendant shall gradually reduce the pressure until the employee signals that the discomfort has ceased. If the employee does not indicate that the discomfort has disappeared, the lock attendant shall reduce the pressure to atmospheric and the employee shall be released from the lock.

(e) No employee shall be subjected to pressure exceeding 50 pounds per square inch except in an emergency.

(6) Decompression.

(a) Decompression to normal condition shall be in accordance with the decompression tables in Appendix A of this part.

(b) In the event it is necessary for an employee to be in compressed air more than once in a 24-hour period, the appointed physician shall be responsible for the establishment of methods and procedures of decompression applicable to repetitive exposures.

(c) If decanting is necessary, the appointed physician shall establish procedures before any employee is permitted to be decompressed by decanting methods. The period of time that the employees spend at atmospheric pressure between the decompression following the shift and recompression shall not exceed 5 minutes.

(7) Man locks and special decompression chambers.

(a) Man locks.

(i) Except in emergency, no employees employed in compressed air shall be permitted to pass from the working chamber to atmospheric pressure until after decompression, in accordance with the procedures in this part.

(ii) The lock attendant in charge of a man lock shall be under the direct supervision of the appointed physician. The lock attendant shall be stationed at the lock controls on the free air side during the period of compression and decompression and shall remain at the lock control station whenever there are persons in the working chamber or in the man lock.

(iii) Except where air pressure in the working chamber is below 12 p.s.i.g., each man lock shall be equipped with automatic controls which, through taped programs, cams, or similar apparatus, shall automatically regulate decompressions. It shall also be equipped with manual controls to permit the lock attendant to override the automatic mechanism in the event of an emergency, as provided in item (viii) of this subdivision.

(iv) A manual control, which can be used in the event of an emergency, shall be placed inside the man lock.

(v) A clock, thermometer, and continuous recording pressure gauge with a 4-hour graph shall be installed outside of each man lock and shall be changed prior to each shift's decompression. The chart shall be of sufficient size to register a legible record of variations in pressure within the man lock and shall be visible to the lock attendant. A copy of each graph shall be submitted to the appointed physician after each shift. In addition, a pressure gauge, clock, and thermometer shall also be installed in each man lock. Additional fittings shall be provided so that the test gauges may be attached whenever necessary

(vi) Except where air pressure is below 12 p.s.i.g. and there is no danger of rapid flooding, all caissons having a working area greater than 150 square feet, and each bulkhead in tunnels of 14 feet or more in diameter, or equivalent area, shall have at least two locks in perfect working condition, one of which shall be used exclusively as a man lock, the other, as a materials lock.

(vii) Where only a combination man-and-materials lock is required, this single lock shall be of sufficient capacity to hold the employees constituting two successive shifts.

(viii) Emergency locks shall be large enough to hold an entire heading shift and a limit maintained of 12 p.s.i.g. There shall be a chamber available for oxygen decompression therapy to 28 p.s.i.g.

(ix) The man lock shall be large enough so that those using it are not compelled to be in a cramped position and shall not have less than 5 feet clear head room at the center and a minimum of 30 cubic feet of air space per occupant.

(x) Locks on caissons shall be so located that the bottom door shall be not less than 3 feet above the water level surrounding the caisson on the outside. (The water level, where it is affected by tides, is construed to mean high tide.)

(xi) In addition to the pressure gauge in the locks, an accurate pressure gauge shall be maintained on the outer and inner side of each bulkhead. These gauges shall be accessible at all times and shall be kept in accurate working order.

(xii) Man locks shall have an observation port at least 4 inches in diameter located in such a position that all occupants of the man lock may be observed from the working chamber and from the free air side of the lock.

(xiii) Adequate ventilation in the lock shall be provided.

(xiv) Man locks shall be maintained at a minimum temperature of 70°F.

(xv) When locks are not in use and employees are in the working chamber, lock doors shall be kept open to the working chamber, where practicable.

(xvi) Provision shall be made to allow for rescue parties to enter the tunnel if the working force is disabled.

(xvii) A special decompression chamber of sufficient size to accommodate the entire force of employees being decompressed at the end of a shift shall be provided whenever the regularly established working period requires total time of decompression exceeding 75 minutes.

(b) Special decompression chamber.

(i) The headroom in the special decompression chamber shall be not less than a minimum 7 feet and the cubical content shall provide at least 50 cubic feet of airspace for each employee. For each occupant, there shall be provided 4 square feet of free walking area and 3 square feet of seating space, exclusive of area required for lavatory and toilet facilities. The rated capacity shall be based on the stated minimum space per employee and shall be posted at the chamber entrance. The posted capacity shall not be exceeded, except in case of emergency.

(ii) Each special decompression chamber shall be equipped with the following:

(A) A clock or clocks suitably placed so that the attendant and the chamber occupants can readily ascertain the time;

(B) Pressure gauges which will indicate to the attendants and to the chamber occupants the pressure in the chamber;

(C) Valves to enable the attendant to control the supply and discharge of compressed air into and from the chamber.

(D) Valves and pipes, in connection with the air supply and exhaust, arranged so that the chamber pressure can be controlled from within and without;

(E) Effective means of oral intercommunication between the attendant, occupants of the chamber, and the air compressor plant; and

(F) An observation port at the entrance to permit observation of the chamber occupants.

(iii) Seating facilities in special decompression chambers shall be so arranged as to permit a normal sitting posture without cramping. Seating space, not less than 18 inches by 24 inches wide, shall be provided per occupant.

(iv) Adequate toilet and washing facilities, in a screened or enclosed recess, shall be provided. Toilet bowls shall have a built-in protector on the rim so that an air space is created when the seat lid is closed.

(v) Fresh and pure drinking water shall be available. This may be accomplished by either piping water into the special decompression chamber and providing drinking fountains, or by providing individual canteens, or by some other sanitary means. Community drinking vessels are prohibited.

(vi) No refuse or discarded material of any kind shall be permitted to accumulate, and the chamber shall be kept clean.

(vii) Unless the special decompression chamber is serving as the man lock to atmospheric pressure, the special decompression chamber shall be situated, where practicable, adjacent to the man lock on the atmospheric pressure side of the bulkhead. A passageway shall be provided, connecting the special chamber with the man lock, to permit employees in the process of decompression to move from the man lock to the special chamber without a reduction in the ambient pressure from that designated for the next stage of decompression. The passageway shall be so arranged as to not interfere with the normal operation of the man lock, nor with the release of the occupants of the special chamber to atmospheric pressure upon the completion of the decompression procedure.

(8) Compressor plant and air supply.

(a) At all times there shall be a thoroughly experienced, competent, and reliable person on duty at the air control valves as a gauge tender who shall regulate the pressure in the working areas. During tunneling operations, one gauge tender may regulate the pressure in not more than two headings: Provided; That the gauges and controls are all in one location. In caisson work, there shall be a gauge tender for each caisson.

(b) The low air compressor plant shall be of sufficient capacity to not only permit the work to be done safely, but shall also provide a margin to meet emergencies and repairs.

(c) Low air compressor units shall have at least two independent and separate sources of power supply and each shall be capable of operating the entire low air plant and its accessory systems.

(d) The capacity, arrangement, and number of compressors shall be sufficient to maintain the necessary pressure without overloading the equipment and to assure maintenance of such pressure in the working chamber during periods of breakdown, repair, or emergency.

(e) Switching from one independent source of power supply to the other shall be done periodically to ensure that workability of the apparatus in an emergency.

(f) Duplicate low-pressure air feedlines and regulating valves shall be provided between the source of air supply and a point beyond the locks with one of the lines extending to within 100 feet of the working face.

(g) All high-pressure and low-pressure air supply lines shall be equipped with check valves.

(h) Low-pressure air shall be regulated automatically. In addition, manually operated valves shall be provided for emergency conditions.

(i) The air intakes for all air compressors shall be located at a place where fumes, exhaust gases, and other air contaminants will be at a minimum.

(j) Gauges indicating the pressure in the working chamber shall be installed in the compressor building, the lock attendant's station, and at the employer's field office.

(9) Ventilation and air quality.

(a) Exhaust valves and exhaust pipes shall be provided and operated so that the working chamber shall be well ventilated, and there shall be no pockets of dead air. Outlets may be required at intermediate points along the main low-pressure air supply line to the heading to eliminate such pockets of dead air. The quantity of ventilation air shall be not less than 30 cubic feet per minute.

(b) The air in the workplace shall be analyzed by the employer not less than once each shift, and records of such tests shall be kept on file at the place where the work is in progress. The test results shall be within the threshold limit values specified in part B of this chapter, for hazardous gases,

and within 10 percent of the lower explosive limit of flammable gases. If these limits are not met, immediate action to correct the situation shall be taken by the employer.

(c) The temperature of all working chambers which are subjected to air pressure shall, by means of after-coolers or other suitable devices, be maintained at a temperature not to exceed 85°F.

(d) Forced ventilation shall be provided during decompression. During the entire decompression period, forced ventilation through chemical or mechanical air purifying devices that will ensure a source of fresh air shall be provided.

(e) Whenever heat-producing machines (moles, shields) are used in compressed air tunnel operations, a positive means of removing the heat build-up at the heading shall be provided.

(10) Electricity.

(a) All lighting in compressed-air chambers shall be by electricity exclusively, and two independent electric-lighting systems with independent sources of supply shall be used. The emergency source shall be arranged to become automatically operative in the event of failure of the regularly used source.

(b) The minimum intensity of light on any walkway, ladder, stairway, or working level shall be not less than 10 foot-candles, and in all workplaces the lighting shall at all times be such as to enable employees to see clearly.

(c) All electrical equipment, and wiring for light and power circuits, shall comply with requirements of Part I, of this standard, for use in damp, hazardous, high temperature, and compressed air environments.

(d) External parts of lighting fixtures and all other electrical equipment, when within 8 feet of the floor, shall be constructed of noncombustible, nonabsorptive, insulating materials, except that metal may be used if it is effectively grounded.

(e) Portable lamps shall be equipped with noncombustible, nonabsorptive, insulating sockets, approved handles, basket guards, and approved cords.

(f) The use of worn or defective portable and pendant conductors is prohibited.

(11) Sanitation.

(a) Sanitary, heated, lighted, and ventilated dressing rooms and drying rooms shall be provided for all employees engaged in compressed air work. Such rooms shall contain suitable benches and lockers. Bathing accommodations (showers at the ratio of one to 10 employees per shift), equipped with running hot and cold water, and suitable and adequate toilet accommodations, shall be provided. One toilet for each 15 employees, or fractional part thereof, shall be provided.

(b) When the toilet bowl is shut by a cover, there should be an air space so that the bowl or bucket does not implode when pressure is increased.

(c) All parts of caissons and other working compartments shall be kept in a sanitary condition.

(12) Fire prevention and protection.

(a) Firefighting equipment shall be available at all times and shall be maintained in working condition.

(b) While welding or flame-cutting is being done in compressed air, a firewatch with a fire hose or approved extinguisher shall stand by until such operation is completed.

(c) Shafts and caissons containing flammable material of any kind, either above or below ground, shall be provided with a waterline and a fire hose connected thereto, so arranged that all points of the shaft or caisson are within reach of the hose stream.

(d) Fire hose shall be at least 1 1/2 inches in nominal diameter; the water pressure shall at all times be adequate for efficient operation of the type of nozzle used; and the water supply shall be such as to ensure an uninterrupted flow. Fire hose, when not in use, shall be located or guarded to prevent injury thereto.

(e) The power house, compressor house, and all buildings housing ventilating equipment, shall be provided with at least one hose connection in the waterline, with a fire hose connected thereto. A fire hose shall be maintained within reach of structures of wood over or near shafts.

(f) Tunnels shall be provided with a 2-inch minimum diameter waterline extending into the working chamber and to within 100 feet of the working face. Such line shall have hose outlets with 100 feet of fire hose attached and maintained as follows: One at the working face; one immediately inside of the bulkhead of the working chamber; and one immediately outside such bulkhead. In addition, hose outlets shall be provided at 200-foot intervals throughout the length of the tunnel, and 100 feet of fire hose shall be attached to the outlet nearest to any location where flammable material is being kept or stored or where any flame is being used.

(g) In addition to fire hose protection required by this part, on every floor of every building not under compressed air, but used in connection with the compressed air work, there shall be provided at least one approved fire extinguisher of the proper type for the hazards involved. At least two approved fire extinguishers shall be provided in the working chamber as follows: One at the working face and one immediately inside the bulkhead (pressure side). Extinguishers in the working chamber shall use water as the primary extinguishing agent and shall not use any extinguishing agent which could be harmful to the employees in the working chamber. The fire extinguisher shall be protected from damage.

(h) Highly combustible materials shall not be used or stored in the working chamber. Wood, paper, and similar combustible material shall not be used in the working chamber in quantities which could cause a fire hazard. The compressor building shall be constructed of noncombustible material.

(i) Man locks shall be equipped with a manual type fire extinguisher system that can be activated inside the man lock and also by the outside lock attendant. In addition, a fire hose and portable fire extinguisher shall be provided inside and outside the man lock. The portable fire extinguisher shall be the dry chemical type.

Note: For additional requirements relating to portable fire extinguishers see WAC 296-800-300.

(j) Equipment, fixtures, and furniture in man locks and special decompression chambers shall be constructed of non-

combustible materials. Bedding, etc., shall be chemically treated so as to be fire resistant.

(k) Head frames shall be constructed of structural steel or open frame-work fireproofed timber. Head houses and other temporary surface buildings or structures within 100 feet of the shaft, caisson, or tunnel opening shall be built of fire-resistant materials.

(l) No oil, gasoline, or other combustible materials shall be stored within 100 feet of any shaft, caisson, or tunnel opening, except that oils may be stored in suitable tanks in isolated fireproof buildings, provided such buildings are not less than 50 feet from any shaft, caisson, or tunnel opening, or any building directly connected thereto.

(m) Positive means shall be taken to prevent leaking flammable liquids from flowing into the areas specifically mentioned in the preceding subdivision.

(n) All explosives used in connection with compressed air work shall be selected, stored, transported, and used as specified in part T of this chapter.

(13) Bulkheads and safety screens.

(a) Intermediate bulkheads with locks, or intermediate safety screens or both, are required where there is danger of rapid flooding.

(b) In tunnels 16 feet or more in diameter, hanging walkways shall be provided from the face to the man lock as high in the tunnel as practicable, with at least 6 feet of head room. Walkways shall be constructed of noncombustible material. Standard railings shall be securely installed throughout the length of all walkways on open sides in accordance with Part C-1 of this chapter. Where walkways are ramped under safety screens, the walkway surface shall be skidproofed by cleats or by equivalent means.

(c) Bulkheads used to contain compressed air shall be tested, where practicable, to prove their ability to resist the highest air pressure which may be expected to be used.

[Statutory Authority: RCW 49.17.010, 49.17.040, 49.17.050, 49.17.060 and 29 C.F.R. 1926, Subpart M, Fall Protection. WSR 13-04-073, § 296-155-745, filed 2/4/13, effective 4/1/13. Statutory Authority: RCW 49.17.010, [49.17].040, and [49.17].050. WSR 01-17-033, § 296-155-745, filed 8/8/01, effective 9/1/01. Statutory Authority: RCW 49.17.040, [49.17.]050 and [49.17.]060. WSR 96-24-051, § 296-155-745, filed 11/27/96, effective 2/1/97. Statutory Authority: Chapter 49.17 RCW. WSR 95-10-016, § 296-155-745, filed 4/25/95, effective 10/1/95; WSR 94-15-096 (Order 94-07), § 296-155-745, filed 7/20/94, effective 9/20/94; WSR 88-23-054 (Order 88-25), § 296-155-745, filed 11/14/88; Order 74-26, § 296-155-745, filed 5/7/74, effective 6/6/74.]

WAC 296-155-74501 Appendix A—Decompression tables.

APPENDIX A—DECOMPRESSION TABLES

(1) **Explanation.** The decompression tables are computed for working chamber pressures from 0 to 14 pounds, and from 14 to 50 pounds per square inch gauge inclusive by 2-pound increments and for exposure times for each pressure extending from one-half to over 8 hours inclusive. Decompressions will be conducted by two or more stages with a maximum of four stages, the latter for a working chamber pressure of 40 pounds per square inch gauge or over.

Stage 1 consists of a reduction in ambient pressure ranging from 10 to a maximum of 16 pounds per square inch, but in no instance will the pressure be reduced below 4 pounds at the end of stage 1. This reduction in pressure in stage 1 will always take place at a rate not greater than 5 pounds per minute.

Further reduction in pressure will take place during stage 2 and subsequent stages as required at a slower rate, but in no event at a rate greater than 1 pound per minute.

Decompression Table No. 1 indicates in the body of the table the total decompression time in minutes for various combinations of working chamber pressure and exposure time.

Decompression Table No. 2 indicates for the same various combinations of working chamber pressure and exposure time the following:

(a) The number of stages required;

(b) The reduction in pressure and the terminal pressure for each required stage;

(c) The time in minutes through which the reduction in pressure is accomplished for each required stage;

(d) The pressure reduction rate in minutes per pound for each required stage;

Important note: The pressure reduction in each stage is accomplished at a uniform rate. Do not interpolate between values shown on the tables. Use the next higher value of working chamber pressure or exposure time should the actual working chamber pressure or the actual exposure time, respectively, fall between those for which calculated values are shown in the body of the tables.

Examples:

Example No. 1:

4 hours working period at 20 pounds gauge.

Decompression Table No. 1:

20 pounds for 4 hours, total decompression time.	43 minutes.

Decompression Table No. 2:

Stage 1: Reduce pressure from 20 pounds to 4 pounds at the uniform rate of 5 pounds per minute.	
Elapsed time stage 1: 16/5–	3 minutes.
Stage 2 (final stage): Reduce pressure at a uniform rate from 4 pounds to 0-pound gage over a period of 40 minutes.	
Rate—0.10 per pound per minute or 10 minutes per pound.	
Stage 2 (final) elapsed time.	40 minutes.
Total time	43 minutes.

Example No. 2:

5-hour working period at 24 pounds gage.

Decompression Table No. 1:

24 pounds for 5 hours, total decompression time.	117 minutes.

Decompression Table No. 2:

Stage 1: Reduce pressure from 24 pounds to 8 pounds at the uniform rate of 5 pounds per minute.

Elapsed time stage 1: 16/5 — 3 minutes.

Stage 2: Reduce pressure at a uniform rate from 8 pounds to 4 pounds over a period of 4 minutes. Rate, 1 pound per minute elapsed time, stage 2 . . . . . 4 minutes.

Transfer person to special decompression chamber maintaining the 4-pound pressure during the transfer operation.

Stage 3 (final stage): In the special decompression chamber, reduce the pressure at a uniform rate from 4 pounds to 0-pound gage over a period of 110 minutes. Rate, 0.037 pound per minute or 27.5 minutes per pound. Stage 3 (final) elapsed time . . . . . 110 minutes.

Total time . . . . . 117 minutes.

DECOMPRESSION TABLE NO. 1

TABLE DECOMPRESSION TIME

Work pressure	Working period hours										
p.s.i.g.	1/2	1	1 1/2	2	3	4	5	6	7	8	Over 8
0-12 . . .	3	3	3	3	3	3	3	3	3	3	3
14	6	6	6	6	6	6	6	6	16	16	33
16	7	7	7	7	7	7	17	33	48	48	62
18	7	7	7	8	11	17	48	63	63	73	87
20	7	7	8	15	15	43	63	73	83	103	113
22	9	9	16	24	38	68	93	103	113	128	133
24	11	12	23	27	52	92	117	122	127	137	151
26	13	14	29	34	69	104	126	141	142	142	163
28	15	23	31	41	98	127	143	153	153	165	183
30	17	28	38	62	105	143	165	168	178	188	204
32	19	35	43	85	126	163	178	193	203	213	226
34	21	39	58	98	151	178	195	218	223	233	248
36	24	44	63	113	170	198	223	233	243	253	273
38	28	49	73	128	178	203	223	238	253	263	278
40	31	49	84	143	183	213	233	248	258	278	288
42	37	56	102	144	189	215	245	260	263	268	293
44	43	64	118	154	199	234	254	264	269	269	293
46	44	74	139	171	214	244	269	274	289	299	318
48	51	89	144	189	229	269	299	309	319	319	…
50	58	94	164	209	249	279	309	329	…	…	…

DECOMPRESSION TABLE NO. 2

(Do not interpolate, use next higher value for conditions not computed.)

Working chamber pressure P.s.i.g.	Working period Hours	Stage No.	Decompression data: Pressure reduction P.s.i.g. From	To	Time in stage Minutes Min/Pound	Pressure reduction rate	Total time decompress Minutes
14	1/2	1	14	4	2	0.20	6
		2	4	0	4	1.00	6
	1	1	14	4	2	0.20	6
		2	4	0	4	1.00	6
	1 1/2	1	14	4	2	0.20	6
		2	4	0	4	1.00	6
	2	1	14	4	2	0.20	6
		2	4	0	4	1.00	6
	3	1	14	4	2	0.20	6
		2	4	0	4	1.00	6
	4	1	14	0	2	0.20	6
		2	4	0	4	1.00	6
	5	1	14	4	2	0.20	6
		2	4	0	4	1.00	6
	6	1	14	4	2	0.20	
		2	4	0	4	1.00	6
	7	1	14	4	2	0.20	
		2	4	0	14	3.50	16
	8	1	14	4	2	0.20	
		2	4	0	14	3.50	16
	Over 8 . . .	1	14	4	2	0.20	
		2	4	0	30	7.50	32
16	1/2	1	16	4	3	0.20	
		2	4	0	4	1.00	7
	1	1	16	4	3	0.20	7
		2	4	0	4	1.00	7
	1 1/2	1	16	4	3	0.20	
		2	4	0	4	1.00	7
	2	1	16	4	3	0.20	
		2	4	0	4	1.00	7
	3	1	16	4	3	0.20	
		2	4	0	4	1.00	7
	4	1	14	4	3	0.20	
		2	4	0	4	1.00	7
	5	1	14	4		0.20	7
		2	4	0	4	3.50	17
	6	1	14	4	3	0.20	
		2	4	0	30	7.50	33
	7	1	14	4	3	0.20	
		2	4	0	45	11.25	48
	8	1	14	4	3	0.20	
		2	4	0	45	11.25	48
	Over 8 . . .	1	14	4	3	0.20	
		2	4	0	60	15.00	63

Working chamber pressure P.s.i.g.	Working period Hours	Stage No.	Decompression data: Pressure reduction P.s.i.g. From	To	Time in stage Minutes Min/Pound	Pressure reduction rate	Total time decom-press Minutes
18	1/2	1	18	4	3	0.20	
		2	4	0	4	1.00	7
	1	1	18	4	3	0.20	
		2	4	0	4	1.00	7
	1 1/2	1	18	4	3	0.20	
		2	4	0	4	1.00	7
	2	1	18	4	3	0.20	
		2	4	0	5	1.25	8
	3	1	18	4	3	0.20	
		2	4	0	8	2.00	11
	4	1	18	4	3	0.20	
		2	4	0	14	3.50	17
	5	1	18	4	3	0.20	
		2	4	0	45	11.25	48
	6	1	18	4	3	0.20	
		2	4	0	60	15.00	63
	7	1	18	4	3	0.20	
		2	4	0	60	15.00	63
	8	1	18	4	3	0.20	
		2	4	0	70	17.50	73
	Over 8	1	18	4	3	0.20	
		2	4	0	84	21.00	87
20	1/2	1	20	4	3	0.20	
		2	4	0	4	1.00	7
	1	1	20	4	3	0.20	
		2	4	0	4	1.00	7
	1 1/2	1	20	4	3	0.20	
		2	4	0	5	1.25	8
	2	1	20	4	3	0.20	
		2	4	0	12	3.00	15
	3	1	20	4	3	0.20	
		2	4	0	12	3.00	15
	4	1	20	4	3	0.20	
		2	4	0	40	10.00	43
	5	1	20	4	3	0.20	
		2	4	0	60	15.00	63
	6	1	20	4	3	0.20	
		2	4	0	70	17.50	73
	7	1	20	4	3	0.20	
		2	4	0	80	20.00	83
	8	1	20	4	3	0.20	
		2	4	0	100	25.00	103
	Over 8	1	20	4	3	0.20	
		2	4	0	110	27.50	113
22	1/2	1	22	6	3	0.20	
		2	6	0	6	1.00	9
	1	1	22	6	3	0.20	
		2	6	0	6	1.00	9
	1 1/2	1	22	6	3	0.20	
		2	6	0	13	2.20	16
	2	1	22	6	3	0.20	
		2	6	0	21	3.50	24
	3	1	22	6	3	0.20	
		2	6	0	35	5.85	38
	4	1	22	6	3	0.20	
		2	6	0	65	10.83	68
	5	1	22	6	3	0.20	
		2	6	0	90	15.00	93
	6	1	22	6	3	0.20	
		2	6	0	100	16.67	103
	7	1	22	6	3	0.20	
		2	6	0	110	18.35	113
	8	1	22	6	3	0.20	
		2	6	0	125	20.80	128
	Over 8	1	22	6	3	0.20	
		2	6	0	130	21.70	133
24	1/2	1	24	8	3	0.20	
		2	8	4	4	1.00	
		3	4	0	4	1.00	11
	1	1	24	8	3	0.20	
		2	8	4	4	1.00	
		3	4	0	5	1.25	12
	1 1/2	1	24	8	3	0.20	
		2	8	4	4	1.00	
		3	4	0	16	4.00	23
	2	1	24	8	3	0.20	
		2	8	4	4	1.00	
		3	4	0	20	5.00	27
	3	1	24	8	3	0.20	
		2	8	4	4	1.00	
		3	4	0	45	11.25	52
	4	1	24	8	3	0.20	
		2	8	4	4	1.00	
		3	4	0	85	21.25	92
	5	1	24	8	3	0.20	
		2	8	4	4	1.00	
		3	4	0	110	27.50	117
	6	1	24	8	3	0.20	
		2	8	4	4	1.00	
		3	4	0	115	28.80	122
	7	1	24	8	3	0.20	
		2	8	4	4	1.00	
		3	4	0	120	30.00	127
	8	1	24	8	3	0.20	
		2	8	4	4	1.00	
		3	4	0	130	32.50	137

Working chamber pressure P.s.i.g.	Working period Hours	Stage No.	Decompression data: Pressure reduction P.s.i.g. From	To	Time in stage Minutes Min/Pound	Pressure reduction rate	Total time decom-press Minutes
	Over 8 . . .	1	24	8	3	0.20	
		2	8	4	8	2.00	
		3	4	0	140	35.00	151
26	1/2	1	26	10	3	0.20	
		2	10	4	6	1.00	
		3	4	0	4	1.00	13
	1	1	26	10	3	0.20	
		2	10	4	6	1.00	
		3	4	0	5	1.25	14
	1 1/2	1	26	10	3	0.20	
		2	10	4	6	1.00	
		3	4	0	20	5.00	29
	2	1	26	10	3	0.20	
		2	10	4	6	1.00	
		3	4	0	25	6.25	34
	3	1	26	10	3	0.20	
		2	10	4	6	1.00	
		3	4	0	60	15.00	69
	4	1	26	10	3	0.20	
		2	10	4	6	1.0	
		3	4	0	95	23.75	104
	5	1	26	10	3	0.20	
		2	10	4	8	1.33	
		3	4	0	115	28.80	126
	6	1	26	10	3	0.20	
		2	10	4	8	1.33	
		3	4	0	130	32.50	141
	7	1	26	10	3	0.20	
		2	10	4	9	1.50	
		3	4	0	130	32.50	142
	8	1	26	10	3	0.20	
		2	10	4	9	1.50	
		3	4	0	130	32.50	142
	Over 8 . . .	1	26	10	3	0.20	
		2	10	4	30	5.00	
		3	4	0	130	32.50	163
28	1/2	1	28	12	3	0.20	
		2	12	4	8	1.00	
		3	4	0	4	1.00	15
	1	1	28	12	3	0.20	
		2	12	4	8	1.00	
		3	4	0	12	3.00	23
	1 1/2	1	28	12	3	0.20	
		2	12	4	8	1.00	
		3	4	0	20	5.00	31
	2	1	28	12	3	0.20	
		2	12	4	8	1.00	
		3	4	0	30	7.50	41
	3	1	28	12	3	0.20	
		2	12	4	10	1.25	
		3	4	0	85	21.20	98
	4	1	28	12	3	0.20	
		2	12	4	14	1.75	
		3	4	0	110	27.50	127
	5	1	28	12	3	0.20	
		2	12	4	20	2.50	
		3	4	0	120	30.00	143
	6	1	28	12	3	0.20	
		2	12	4	20	2.50	
		3	4	0	130	32.50	153
	7	1	28	12	3	0.20	
		2	12	4	20	2.50	
		3	4	0	130	32.50	153
	8	1	28	12	3	0.20	
		2	12	4	32	4.00	
		3	4	0	130	32.50	165
	Over 8 . . .	1	28	12	3	0.20	
		2	12	4	50	6.25	
		3	4	0	130	32.50	183
30	1/2	1	30	14	3	0.20	
		2	14	4	10	1.00	
		3	4	0	4	1.00	17
	1	1	30	14	3	0.20	
		2	14	4	10	1.00	
		3	4	0	15	3.75	28
	1 1/2	1	30	14	3	0.20	
		2	14	4	10	1.00	
		3	4	0	25	6.25	38
	2	1	30	14	3	0.20	
		2	14	4	14	1.40	
		3	4	0	45	11.25	62
	3	1	30	14	3	0.20	
		2	14	4	17	1.70	
		3	4	0	85	21.20	105
	4	1	30	14	3	0.20	
		2	14	4	30	3.00	
		3	4	0	110	27.50	143
	5	1	30	14	3	0.20	
		2	14	4	35	3.50	
		3	4	0	130	32.50	165
	6	1	30	14	3	0.20	
		2	14	4	35	3.50	
		3	4	0	130	32.50	168
	7	1	30	14	3	0.20	
		2	14	4	45	4.50	
		3	4	0	130	32.50	178

Working chamber pressure P.s.i.g.	Working period Hours	Stage No.	Decompression data: Pressure reduction P.s.i.g. From	To	Time in stage Minutes Min/Pound	Pressure reduction rate	Total time decom-press Minutes
	8	1	30	14	3	0.20	
		2	14	4	55	5.50	
		3	4	0	130	32.50	188
	Over 8 . . .	1	30	14	3	0.20	
		2	14	4	71	7.10	
		3	4	0	130	32.50	204
32	1/2	1	32	16	3	0.20	
		2	16	4	12	1.00	
		3	4	0	4	1.00	19
	1	1	32	16	3	0.20	
		2	16	4	12	1.00	
		3	4	0	20	5.00	35
	1 1/2	1	32	16	3	0.20	
		2	16	4	15	1.25	
		3	4	0	25	6.25	43
	2	1	32	16	3	0.20	
		2	16	4	22	1.83	
		3	4	0	60	15.00	85
	3	1	32	16	3	0.20	
		2	16	4	28	2.33	
		3	4	0	95	23.75	126
	4	1	32	16	3	0.20	
		2	16	4	40	3.33	
		3	4	0	120	30.00	163
	5	1	32	16	3	0.20	
		2	16	4	45	3.75	
		3	4	0	130	32.50	178
	6	1	32	16	3	0.20	
		2	16	4	60	5.00	
		3	4	0	130	32.50	193
	7	1	32	16	3	0.20	
		2	16	4	70	5.83	
		3	4	0	130	32.50	203
	8	1	32	16	3	0.20	
		2	16	4	80	6.67	
		3	4	0	130	32.50	213
	Over 8 . . .	1	32	16	3	0.20	
		2	16	4	93	7.75	
		3	4	0	130	32.50	226
34	1/2	1	34	18	3	0.20	
		2	18	4	14	1.00	
		3	4	0	4	1.00	21
	1	1	34	18	3	0.20	
		2	18	4	14	1.00	
		3	4	0	22	5.50	39
	1 1/2	1	34	18	3	0.20	
		2	18	4	25	1.80	
		3	4	0	30	7.50	58
	2	1	34	18	3	0.20	
		2	18	4	35	2.50	
		3	4	0	60	15.00	98
	3	1	34	18	3	0.20	
		2	18	4	43	3.10	
		3	4	0	105	26.25	151
	4	1	34	18	3	0.20	
		2	18	4	55	3.93	
		3	4	0	120	30.00	178
	5	1	34	18	3	0.20	
		2	18	4	62	4.43	
		3	4	0	130	32.50	195
	6	1	34	18	3	0.20	
		2	18	4	85	6.07	
		3	4	0	130	32.50	218
	7	1	34	18	3	0.20	
		2	18	4	90	6.43	
		3	4	0	130	32.50	223
	8	1	34	18	3	0.20	
		2	18	4	100	7.15	
		3	4	0	130	32.50	233
	Over 8 . . .	1	34	18	3	0.20	
		2	18	4	115	8.23	
		3	4	0	130	32.50	248
36	1/2	1	36	20	3	0.20	
		2	20	4	16	1.00	
		3	4	0	5	1.25	24
	1	1	36	20	3	0.20	
		2	20	4	16	1.00	
		3	4	0	25	6.25	44
	1 1/2	1	36	20	3	0.20	
		2	20	4	30	1.88	
		3	4	0	30	7.50	63
	2	1	36	20	3	0.20	
		2	20	4	40	2.50	
		3	4	0	70	17.50	113
	3	1	36	20	3	0.20	
		2	20	4	52	3.25	
		3	4	0	115	28.75	170
	4	1	36	20	3	0.20	
		2	20	4	65	4.06	
		3	4	0	130	32.50	198
	5	1	36	20	3	0.20	
		2	20	4	90	5.63	
		3	4	0	130	32.50	223
	6	1	36	20	3	0.20	
		2	20	4	100	6.25	
		3	4	0	130	32.50	233

Working chamber pressure P.s.i.g.	Working period Hours	Stage No.	Decompression data: Pressure reduction P.s.i.g. From	To	Time in stage Minutes Min/Pound	Pressure reduction rate	Total time decom-press Minutes
	7	1	36	20	3	0.20	
		2	20	4	110	6.88	
		3	4	0	130	32.50	243
	8	1	36	20	3	0.20	
		2	20	4	120	7.50	
		3	4	0	130	32.50	253
	Over 8 . . .	1	36	20	3	0.20	
		2	20	4	140	8.75	
		3	4	0	130	32.50	273
38	1/2	1	38	22	3	0.20	
		2	22	6	16	1.00	
		3	6	0	9	1.50	28
	1	1	38	22	3	0.20	
		2	22	6	16	1.00	
		3	6	0	30	5.00	49
	1 1/2	1	38	22	3	0.20	
		2	22	6	20	1.25	
		3	6	0	50	8.34	73
	2	1	38	22	3	0.20	
		2	22	6	30	1.88	
		3	6	0	95	15.83	128
	3	1	38	22	3	0.20	
		2	22	6	35	2.19	
		3	6	0	140	23.35	178
	4	1	38	22	3	0.20	
		2	22	6	50	3.12	
		3	6	0	150	25.00	203
	5	1	38	22	3	0.20	
		2	22	6	55	3.44	
		3	6	0	165	27.50	223
	6	1	28	22	3	0.20	
		2	22	6	70	4.38	
		3	6	0	165	27.50	238
	7	1	38	22	3	0.20	
		2	22	6	85	5.32	
		3	6	0	165	27.50	253
	8	1	38	22	3	0.20	
		2	22	6	95	5.93	
		3	6	0	165	27.50	263
	Over 8 . . .	1	38	22	3	0.20	
		2	22	6	110	6.88	
		3	6	0	165	27.50	278
40	1/2	1	40	24	3	0.20	
		2	24	8	16	1.00	
		3	8	4	4	1.00	
		4	4	0	8	2.00	31
	1	1	40	24	3	0.20	
		2	24	8	16	1.00	
		3	8	4	5	1.25	
		4	4	0	25	6.25	49
	1 1/2	1	40	24	3	0.20	
		2	24	8	16	1.00	
		3	8	4	20	5.00	
		4	4	0	45	11.25	84
	2	1	40	24	3	0.20	
		2	24	8	25	1.56	
		3	8	4	20	5.00	
		4	4	0	95	23.75	143
	3	1	40	24	3	0.20	
		2	24	8	30	1.88	
		3	8	4	30	7.50	
		4	4	0	120	30.00	183
	4	1	40	24	3	0.20	
		2	24	8	45	2.81	
		3	8	4	35	8.75	
		4	4	0	130	32.50	213
	5	1	40	24	3	0.20	
		2	24	8	47	2.94	
		3	8	4	53	13.25	
		4	4	0	130	32.50	233
	6	1	40	24	3	0.20	
		2	24	8	55	3.44	
		3	8	4	60	15.00	
		4	4	0	130	32.50	248
	7	1	40	24	3	0.20	
		2	24	8	65	4.06	
		3	8	4	60	15.00	
		4	4	0	130	32.50	258
	8	1	40	24	3	0.20	
		2	24	8	75	4.70	
		3	8	4	60	15.00	
		4	4	0	130	32.50	268
	Over 8 . . .	1	40	24	3	0.20	
		2	24	8	95	5.93	
		3	8	4	60	15.00	
		4	4	0	130	32.50	288
42	1/2	1	42	26	3	0.20	
		2	26	10	16	1.00	
		3	10	4	6	1.00	
		4	4	0	12	3.00	37
	1	1	42	26	3	0.20	
		2	26	10	16	1.00	
		3	10	4	12	2.00	
		4	4	0	25	6.25	56
	1 1/2	1	42	26	3	0.20	
		2	26	10	16	1.00	

Working chamber pressure P.s.i.g.	Working period Hours	Stage No.	Decompression data: Pressure reduction P.s.i.g. From	To	Time in stage Minutes Min/Pound	Pressure reduction rate	Total time decom-press Minutes
		3	10	4	23	3.83	
		4	4	0	60	15.00	102
	2	1	42	26	3	0.20	
		2	26	10	16	1.00	
		3	10	4	30	5.00	
		4	4	0	95	23.75	144
	3	1	42	26	3	0.20	
		2	26	10	16	1.00	
		3	10	4	50	8.34	
		4	4	0	120	30.00	189
	4	1	42	26	3	0.20	
		2	26	10	17	1.06	
		3	10	4	65	10.83	
		4	4	0	130	32.50	215
	5	1	42	26	3	0.20	
		2	26	10	27	1.69	
		3	10	4	85	14.18	
		4	4	0	130	32.50	245
	6	1	42	26	3	0.20	
		2	26	10	27	1.69	
		3	10	4	100	16.67	
		4	4	0	130	32.50	260
	7	1	42	26	3	0.20	
		2	26	10	30	1.88	
		3	10	4	100	16.67	
		4	4	0	130	32.50	263
	8	1	42	26	3	0.20	
		2	26	10	35	2.19	
		3	10	4	100	16.67	
		4	4	0	130	32.50	268
	Over 8 . . .	1	42	26	3	0.20	
		2	26	10	60	3.75	
		3	10	4	100	16.67	
		4	4	0	130	32.50	293
44	1/2	1	44	28	3	0.20	
		2	28	12	16	1.00	
		3	12	4	8	1.00	
		4	4	0	16	4.00	43
	1	1	44	28	3	0.20	
		2	28	12	16	1.00	
		3	12	4	20	2.50	
		4	4	0	25	6.25	64
	1 1/2	1	44	28	3	0.20	
		2	28	12	16	1.00	
		3	12	4	27	3.38	
		4	4	0	72	18.00	118
	2	1	44	28	3	0.20	
		2	28	12	16	1.00	
		3	12	4	40	5.00	
		4	4	0	95	23.75	154
	3	1	44	28	3	0.20	
		2	28	12	16	1.00	
		3	12	4	60	7.50	
		4	4	0	120	30.00	199
	4	1	44	28	3	0.20	
		2	28	12	16	1.00	
		3	12	4	85	10.62	
		4	4	0	130	32.50	234
	5	1	44	28	3	0.20	
		2	28	12	16	1.00	
		3	12	4	105	13.13	
		4	4	0	130	32.50	254
	6	1	44	28	3	0.20	
		2	28	12	16	1.00	
		3	12	4	115	14.38	
		4	4	0	130	32.50	264
	7	1	44	28	3	0.20	
		2	28	12	16	1.00	
		3	12	4	120	15.00	
		4	4	0	130	32.50	269
	8	1	44	28	3	0.20	
		2	28	12	16	1.00	
		3	12	4	120	15.00	
		4	4	0	130	32.50	269
	Over 8 . . .	1	44	28	3	0.20	
		2	28	12	40	2.50	
		3	12	4	120	15.00	
		4	4	0	130	32.50	293
46	1/2	1	46	30	3	0.20	
		2	30	14	16	1.00	
		3	14	4	10	1.00	
		4	4	0	15	3.75	44
	1	1	46	30	3	0.20	
		2	30	14	16	1.00	
		3	14	4	25	2.50	
		4	4	0	30	7.50	74
	1 1/2	1	46	30	3	0.20	
		2	30	14	16	1.00	
		3	14	4	35	3.50	
		4	4	0	85	21.20	139
	2	1	46	30	3	0.20	
		2	30	14	16	1.00	
		3	14	4	47	4.70	
		4	4	0	105	26.25	171
	3	1	46	30	3	0.20	
		2	30	14	16	1.00	

Working chamber pressure P.s.i.g.	Working period Hours	Stage No.	Decompression data: Pressure reduction P.s.i.g. From	To	Time in stage Minutes Min/Pound	Pressure reduction rate	Total time decom-press Minutes
		3	14	4	65	6.50	
		4	4	0	130	32.50	214
	4	1	46	30	3	0.20	
		2	30	14	16	1.00	
		3	14	4	95	9.50	
		4	4	0	130	32.50	244
	5	1	46	30	3	0.20	
		2	30	14	16	1.00	
		3	14	4	120	12.00	
		4	4	0	130	32.50	269
	6	1	46	30	3	0.20	
		2	30	14	16	1.00	
		3	14	4	125	12.50	
		4	4	0	130	32.50	274
	7	1	46	30	3	0.20	
		2	30	14	16	1.00	
		3	14	4	140	14.00	
		4	4	0	130	32.50	289
	8	1	46	30	3	0.20	
		2	30	14	16	1.00	
		3	14	4	150	15.00	
		4	4	0	130	32.50	299
	Over 8 . . .	1	46	30	3	0.20	
		2	30	14	25	1.56	
		3	14	4	160	16.00	
		4	4	0	130	32.50	318
48	1/2	1	48	32	3	0.20	
		2	32	16	16	1.00	
		3	16	4	12	1.00	
		4	4	0	20	5.00	51
	1	1	48	32	3	0.20	
		2	32	16	16	1.00	
		3	16	4	35	2.92	
		4	4	0	35	8.75	89
	1 1/2	1	48	32	3	0.20	
		2	32	16	16	1.00	
		3	16	4	45	3.75	
		4	4	0	80	20.00	144
	2	1	48	32	3	0.20	
		2	32	16	16	1.00	
		3	16	4	60	5.00	
		4	4	0	110	27.50	189
	3	1	48	32	3	0.20	
		2	32	16	16	1.00	
		3	16	4	90	7.50	
		4	4	0	120	30.00	229
	4	1	48	32	3	0.20	
		2	32	16	16	1.00	
		3	16	4	120	10.00	
		4	4	0	130	32.50	269
	5	1	48	32	3	0.20	
		2	32	16	16	1.00	
		3	16	4	140	11.67	
		4	4	0	130	32.50	299
	6	1	48	32	3	0.20	
		2	32	16	16	1.00	
		3	16	4	160	13.33	
		4	4	0	130	32.50	309
	7	1	48	32	3	0.20	
		2	32	16	16	1.00	
		3	16	4	170	14.17	
		4	4	0	130	32.50	319
	8	1	48	32	3	0.20	
		2	32	16	16	1.00	
		3	16	4	170	14.17	
		4	4	0	130	32.50	319
50	1/2	1	50	34	3	0.20	
		2	34	18	16	1.00	
		3	18	4	14	1.00	
		4	4	0	25	6.25	58
	1	1	50	34	3	0.20	
		2	34	18	16	1.00	
		3	18	4	40	2.86	
		4	4	0	35	8.75	94
	1 1/2	1	50	34	3	0.20	
		2	34	18	16	1.00	
		3	18	4	55	3.93	
		4	4	0	90	22.50	164
	2	1	50	34	3	0.20	
		2	34	18	16	1.00	
		3	18	4	70	5.00	
		4	4	0	120	30.00	209
	3	1	50	34	3	0.20	
		2	34	18	16	1.00	
		3	18	4	100	7.15	
		4	4	0	130	32.50	249
	4	1	50	34	3	0.20	
		2	34	18	16	1.00	
		3	18	4	130	8.58	
		4	4	0	130	32.50	279
	5	1	50	34	3	0.20	
		2	34	18	16	1.00	
		3	18	4	160	11.42	
		4	4	0	130	32.50	309
	6	1	50	34	3	0.20	
		2	34	18	16	1.00	

Working chamber pressure P.s.i.g.	Working period Hours	Stage No.	Decompression data: Pressure reduction P.s.i.g. From	To	Time in stage Minutes Min/Pound	Pressure reduction rate	Total time decompress Minutes
		3	18	4	180	12.85	
		4	4	0	130	32.50	329

[Statutory Authority: Chapter 49.17 RCW. WSR 94-15-096 (Order 94-07), § 296-155-74501, filed 7/20/94, effective 9/20/94; Order 74-26, § 296-155-745 (part), Appendix A (codified as WAC 296-155-74501), filed 5/7/74, effective 6/6/74.]

PART R

MISCELLANEOUS CONSTRUCTION REQUIREMENTS

WAC 296-155-755 Roofing, insulating and waterproofing. (1) Roofers hoisting jack shall be constructed to withstand the contemplated load to be hoisted. The beam from counter balance point to heel of jack shall be at least 3/4 the length of the entire beam.

(2) Hoisting jack shall be counterweighted with a minimum of three times the contemplated maximum load to be lifted. Counterweight shall be securely fastened to heel of jack to prevent displacement, or the jack shall be fastened by means of lashing, bolting, or other means to prevent displacement.

(3) A steel collar or U-bolt and shackle on head of the hoisting jack shall be provided for attachment of pulley.

(4) Hoisting pulleys shall be of steel construction.

(5) Where materials are hoisted by hand the hoist line shall be not less than five-eighths manila rope, or the equivalent. Where machine hoist is used the hoist line shall be wire rope.

(6) Hoisting hooks shall be of cast or forged steel heavy enough to prevent straightening under a load.

(7) Workers shall not stand under load when material or hot asphalt is being hoisted.

(8) Hot asphalt shall be kept at a safe level in buckets for carrying and hoisting.

(9) Service buckets of hot asphalt shall not be carried up ladders by workers.

(10) Service buckets shall be standard safety bucket or flatbottom bucket with bails fastened to an offset ear firmly riveted to side of bucket. There shall be a handle riveted near bottom of bucket for tipping purposes.

(11) Ladders shall extend at least 3 feet above the platform or roof served and shall be secured at top and bottom to prevent slipping.

(12) Safeguards shall be erected to prevent loads and lines contacting power lines where not possible to work in clear of power lines.

(13) Asphalt chunks shall not be thrown into hot tar pot, but shall be placed so as to prevent splashing of hot material.

(14) There shall be means to smother fires at fired tar pots.

(15) Mop or spud bar handles over three feet long shall be of wood or other nonconductive material.

(16) Persons working at kettles or handling hot tar shall, wear gloves and have arms fully protected.

(17) Open tar heating pots shall be kept outside of buildings.

Note: Electric type tar heating equipment may be used inside of the working enclosure provided that exhaust fans in connection with tubing, either rigid or flexible, capable of carrying fumes created by the heating process to the outside air are installed and in constant use during heating operations. The equipment should be provided with hinged lid or baffle plate for the purpose of immediate smothering of a pot fire.

(18) While hot tar is being applied inside an enclosure, exhaust fans to supplement natural ventilation shall be installed to expedite removal of gaseous fumes from the building.

(19) Flame heated tar pots shall be prohibited on roofs of structures.

(20) Tar pots shall have an attendant at all times while in operation.

[Order 74-26, § 296-155-755, filed 5/7/74, effective 6/6/74.]

WAC 296-155-765 Rock crushing, gravel washing, and hot mix plants. (1) Stationary dragline machines shall have all moving parts which are exposed to contact guarded with standard safeguards.

(a) All running lines, straps, etc., shall be regularly inspected and shall be changed when 10% of the wires in a 3 foot length are broken.

(b) Spars shall be properly guyed with a minimum of 5 top guys and where spar is over 50 feet in height, 3 buckle guys shall be used.

(c) A pass line shall be rigged on the spar to provide safe means of reaching top of spar.

(d) The head block shall be equipped with a safety strap attached to shell of the block and onto a guy wire leading away from the working area.

(2) Truck dump bunkers shall have wheel bumper block installed when dumping material from trucks.

(3) Substantial walkways and working platforms, equipped with toe boards and handrails shall be installed at all plants. Standard stairways and ladders shall be placed to reach all parts requiring oiling and maintenance.

(4) Plant structures shall be constructed to carry the required load, without material or structural failure, for the prescribed life of the material used.

(5) Bunker unloading devices shall be arranged to be operative from outside the walls of bunkers.

(6) Crusher operators and other employees working where hazardous dust or nuisance dust exists shall use approved respirators and goggles.

(7) All dusty rock crushing houses or other dusty places of employment, shall be equipped with means for controlling the dust.

(8) Cone type crushers shall be equipped with approved guards over or around the feed end to prevent rock from flying from crusher while in operation.

(9) All aggregate elevators, bucket or other type, shall have guards or barricades installed under or around return strand and of sufficient strength to sustain weight of piled up broken elevator equipment.

(10) All plant controls shall be placed so as to be readily accessible.

(11) Overhead conveyors shall be constructed so as to restrain the spillage of material. Wherever the hazard of falling materials exists, overhead protection shall be provided over walkways and roadways.

(12) Electrical equipment shall be installed and maintained to comply with the National Electrical Code.

(13) Exhaust fumes from internal combustion engines shall be discharged away from or above the working station.

(14) Hot mix plants, steam boilers and pressure vessels shall conform to A.S.M.E. Boiler and Pressure Vessel Codes and applicable rules and regulations of the department.

(15) All hot pipes exposed to contact shall be covered or otherwise guarded against contact.

(16) All oil tanks above ground shall be properly bedded and grounded.

(17) Oil leakage on the ground shall be cleaned up or covered with absorbent material.

(18) Mixer operators shall use approved respirator and goggles except when operating from a remote location.

(19) Dust and fume collection systems shall be provided on all installations. Dust and fumes shall be discharged back into plant or carried to a suitable distance from the work area and precipitated.

[Statutory Authority: RCW 49.17.040 and 49.17.050. WSR 86-03-074 (Order 86-14), § 296-155-765, filed 1/21/86; Order 74-26, § 296-155-765, filed 5/7/74, effective 6/6/74.]

WAC 296-155-770 Moving of structures. (1) When structures are being raised, lowered, temporarily held in position or moved laterally, care shall be exercised to prevent the possibility of mishap.

(2) Weights to be moved shall be carefully computed and equipment furnished to provide a safety factor of five.

(3) Where excavations exist they shall be shored in compliance with Part N of this chapter.

(4) Cribbing and blocking shall be set on a level and firm foundation.

(5) Dollies and rollers shall be securely blocked except when structure is being moved by power equipment.

(6) Jacks shall comply with WAC 296-155-375 of this chapter.

(7) Provisions shall be made to maintain a minimum clearance of 10 feet from all electrical conductors with the following exceptions:

(a) When a representative of the owner of the electrical conductors is present and directs the handling of all said conductors.

(b) Where there shall be existing and/or erected mechanical barriers to prevent contact of structure or workers with said electrical conductors. Barriers shall be installed by or under the direction of the owners of the conductors.

(c) Where said electrical conductors have been de-energized and grounded by the owners of the conductors.

(d) By relocation of said electrical conductors by the owners of the conductors. The 10 foot requirement shall not be reduced by movement due to strains being imposed upon the conductors or the structures supporting the conductors or upon any fixtures or attachments thereon.

(8) When a structure is being lifted, shoring shall be provided at all times and be kept up to the object until the desired height is reached, and then it shall be blocked or cribbed immediately.

(9) Timbers must be in sound condition and of a size sufficient to maintain not more than one inch deflection for each 200 inches of unsupported span.

(10) The cross member used on the front dolly, or the fifth wheel on the truck, must be of construction and size to preclude any deflection. All floor joists of the building being moved must be firmly supported on either the running members or on the cross members, which in turn ride on or are firmly attached to the running members.

(11) When timbers are used as the cross member, a steel saddle or cradle shall be used which will distribute the load evenly over the cross members, which in turn ride on or are firmly attached to the running members.

(12) When timbers are used as the cross member, a steel saddle or cradle shall be used which will distribute the load evenly over the cross sectional area of said timber where the timber is supported over the dolly or fifth wheel. This saddle or cradle shall be equipped so as to be interchangeable on any standard fifth wheel when such operation is used. Cross members of any other material used on fifth wheel loading shall also be so equipped.

(13) When running members are secured to the lower side of the cross member supported by the fifth wheel or front dolly, the primary support shall be 3/4 inch steel bolts placed one on either side of each member and spaced from such members by 1/2 inch steel plate shaped to act as a template for placement on the top of the cross member and beneath the running member. 3/4 by 3" nuts shall be used to tighten the above described clamp in a secure fashion. A secondary binding of chain or cable with chain binder or jacks shall be used to securely fasten the running members to cross members.

Note: Chains or cables securely tightened can be used. A secondary chain or safety chain should also be used in the event that the main chain should snap.

(14) Safety chains shall be used between the running members and the towing truck to supplant the tow bar, and will be secured so as to preclude any possibility of the running timbers being pulled off the cross members on the truck or from the dollies.

(15) For the purpose of computing weights to determine the axle and tire loadings, the cubic volume of the building (length, width and height), including walls, floors and ceiling joists, shall be used, allowing five pounds per cubic foot. This method of computing weight shall be used to determine if larger equipment need be employed on any given move.

(16) When fastening structures to tractor, and runners are clamped to headers, steel chains or the equivalent shall be used. If steel chains are used, said chains shall be tightened by railroad jacks or the equivalent.

(17) All motor vehicles shall conform with motor vehicle laws of the state of Washington.

(18) A fifth wheel type suspension with two nonsteering dollies shall be acceptable for moving buildings which do not exceed 46 feet in length. Permission to move larger structures with this type of suspension shall be obtained from the department.

(19) Pushing from the rear shall be prohibited unless a system of signals is used to control the driver.

(20) Blocks capable of holding the unit being moved shall be carried, and in case of winching operations, shall be kept close to the downhill side of the wheel of each dolly to prevent a runaway should the cable slip.

[Order 74-26, § 296-155-770, filed 5/7/74, effective 6/6/74.]

WAC 296-155-77100 Hoists, elevators, excavators, and conveyors.

Accessory - A secondary part or assembly of parts which contributes to the overall function and usefulness of a machine.

Appointed - Assigned specific responsibilities by the employer or the employer's representative.

Authorized person - Means a person approved or assigned by the employer to perform a specific type of duty or duties or be at a specific location or locations at the workplace.

Auxiliary hoist - A secondary hoist rope system used either in conjunction with, or independently of, the main hoist system.

Axle - The shaft or spindle with which or about which a wheel rotates. On wheel-mounted cranes it refers to a type of axle assembly including housings, gearing, differential, bearings, and mounting appurtenances.

Brake - A device used for retarding or stopping motion.

Clutch - A means for engagement or disengagement of power.

Commercial truck vehicle - A commercial motor vehicle designed primarily for the transportation of property in connection with business and industry.

Designated - Selected or assigned by the employer or the employer's representative as being competent to perform specific duties.

Job site - Work area defined by the construction contract.

Limiting device - A mechanical device which is operated by some part of a power driven machine or equipment to control loads or motions of the machine or equipment.

Payload - That load or loads being transported by the commercial truck chassis from place to place.

Qualified person - A person who, by possession of a recognized degree or certificate of professional standing, or who, by extensive knowledge, training, and experience, has successfully demonstrated the ability to solve or resolve problems relating to the subject matter and work.

(1) General requirements.

(a) Rated load capacities, and recommended operating speeds, and special hazard warnings, or instruction, shall be conspicuously posted on all equipment. Instructions or warnings shall be visible to the operator while at the control station.

(b) The operator shall avoid carrying loads over people.

(c) Operators shall observe signals only from duly authorized persons. Under no circumstances shall a load be moved until the signal is received from authorized personnel.

(d) Belts, gears, shafts, pulleys, sprockets, spindles, drums, fly wheels, chains, or other reciprocating, rotating, or other moving parts or equipment shall be guarded if such parts are exposed to contact by employees, or otherwise create a hazard. Guarding shall meet the requirements of chapter 296-806 WAC, Machine safety.

(e) All exhaust pipes shall be guarded or insulated where contact by employees, in the performance of normal duties, is possible.

(f) Whenever internal combustion engine powered equipment exhaust is in enclosed spaces, tests shall be made and recorded to see that employees are not exposed to unsafe concentrations of toxic gases or oxygen deficient atmospheres. See chapter 296-62 WAC, General occupational health standards and chapter 296-841 WAC, identifying and controlling respiratory hazards.

(g) Fuel tank filler pipe shall be located in such a position, or protected in such a manner, as to not allow spill or overflow to run onto the engine, exhaust, or electrical equipment of any machine being fueled.

(i) An accessible fire extinguisher of 5BC rating, or higher, shall be available at all operator stations or cabs of equipment.

Note: For additional requirements relating to portable fire extinguishers see WAC 296-800-300.

(ii) All fuels shall be transported, stored, and handled to meet the rules of Part D of this chapter. When fuel is transported by vehicles on public highways, department of transportation rules concerning such vehicular transportation are considered applicable.

(h) Except where electrical distribution and transmission lines have been deenergized and visibly grounded at point of work or where insulating barriers, not a part of or an attachment to the equipment or machinery, have been erected to prevent physical contact with the lines, equipment or machines shall be operated proximate to power lines only in accordance with the following:

(i) For lines rated 50 kV or below, minimum clearance between the lines and any part of the equipment or load shall be ten feet.

(ii) For lines rated over 50 kV, minimum clearance between the lines and any part of the equipment or load shall be ten feet plus four tenths inch for each 1 kV over 50 kV, or twice the length of the line insulator, but never less than ten feet.

(iii) In transit with no load and boom lowered, the equipment clearance shall be a minimum of four feet for voltages less than 50 kV, and ten feet for voltages over 50 kV up to and including 345 kV, and sixteen feet for voltages up to and including 750 kV.

(iv) A person shall be designated to observe clearance of the equipment and give timely warning to insure that the required separation is maintained for all operators where it is difficult for the operator to maintain the desired clearance by visual means.

(v) Any overhead wire shall be considered to be an energized line unless and until the person owning such line or the electrical utility authorities indicate that it is not an energized line and it has been visibly grounded.

(vi) Prior to work near transmitter tower where an electrical charge can be induced in the equipment or materials being handled, the transmitter shall be deenergized or tests shall be made to determine if electrical charge is induced on the machine.

(i) Reserved.

(j) The following precautions shall be taken when necessary to dissipate induced voltage:

(i) The equipment shall be provided with an electrical ground directly to the upper rotating structure supporting the boom; and

(ii) Ground jumper cables shall be attached to materials being handled by boom equipment when electrical charge is induced while working near energized transmitters. Crews shall be provided with nonconductive poles having large alligator clips or other similar protection to attach the ground cable to the load.

(k) No modifications or additions which affect the capacity or safe operation of the equipment shall be made by the employer without the manufacturer's or a qualified engineer's written approval. If such modification or changes are made, the capacity, operation, and maintenance instruction plates, tags, or decals, shall be changed accordingly. In no case shall the original safety factor of the equipment be reduced.

(2) Excavation machines.

(a) In all power driven shovel operations the person in charge shall issue instructions necessary to prevent accidents, to detect and correct unsafe acts and dangerous conditions, and to enforce all safety rules and regulations. The person in charge shall also issue instructions on the proper method of using tools and handling material.

(b) Where the ground is soft or uneven, timbering and planking shall be used to provide firm foundation and distribute the load.

(c) In case of a breakdown, the shovel shall be moved away from the foot of the slope before repairs are made.

(d) All persons shall keep away from the range of the shovel's swing and shall not be permitted to stand back of the shovel or in line with the swing of the dipper during operation or moving of shovel.

(e) Unauthorized persons shall not be allowed on the shovel during operations, and the operator shall not converse with other persons while operating machine.

(f) The shovel dipper shall rest on the ground or on blocking during shut down periods.

(g) Shovels shall be inspected daily and all defects promptly repaired.

(h) Oiling and greasing shall be done under safe conditions with machine at rest, except when motion of machine is necessary.

(i) All steps, running boards, and boom ladder shall be of substantial construction and in good repair at all times.

(j) Operators shall not leave the cab while master clutch is engaged.

(k) Fire extinguishers shall be readily accessible and within reach of operator at all times.

(l) All shovel cabs shall be kept clean and free of excess oil and grease on floor and machinery. Oily and greasy rags shall be disposed of immediately after use and not allowed to accumulate.

(m) Tools shall not be left on the cab floor. Spare cans of oil or fuel, and spare parts, shall not be stored in cabs, except in approved racks provided for that purpose.

(n) Mats or planking shall be used in moving shovels over soft or uneven ground.

(o) Shovels setting on steep grades shall be securely blocked or secured with a tail hold.

(p) Smoking shall be prohibited while fueling or oiling machines.

(q) Gasoline powered motors shall be stopped during refueling.

(r) Handling of movable feed line (bologna) shall be accomplished with insulated hooks and lineman's rubber gloves.

(s) Where cables cross roads they shall be elevated or placed in a trench.

(t) On all power shovels, including back-hoe types, of one-half cubic yard capacity or over, two persons shall constitute the minimum working crew. It is mandatory that one be a qualified operator of the equipment in use. The job title of the other crew member may be oiler, rigger, signal person, or a laborer. The primary purpose of the second crew member is to signal the operator when the operator's vision is impaired or obscured and to be on-hand in case of an emergency.

(i) Second-crew persons shall be properly trained in their second-person required skills.

(ii) The second crew member shall be close enough to the machine in operation to be aware of any emergency, if one arises, and to assure the machine is operated with necessary and appropriate signals to the operator.

[Statutory Authority: RCW 49.17.010, 49.17.040, 49.17.050, 49.17.440, 49.17.060, and 29 C.F.R. 1926, Subpart CC. WSR 12-01-086, § 296-155-77100, filed 12/20/11, effective 2/1/12.]

WAC 296-155-77105 Material hoists, personnel hoists, and elevators. (1) General requirements.

(a) The employer shall comply with the manufacturer's specifications and limitations applicable to the operation of all hoists and elevators. Where the manufacturer's specifications are not available, the limitations assigned to the equipment shall be based on the determinations of a professional engineer competent in the field.

(b) The employer shall ensure that no person shall enter a hoistway, elevator shaft, or similar enclosure in which the hoisting apparatus or vehicle is installed and functioning unless the power source operating those systems is locked out in accordance with WAC 296-155-429.

(c) Rated load capacities, recommended operating speeds, and special hazard warning or instructions shall be posted on cars and platforms.

(d) Wire rope shall be removed from service when any of the following conditions exists:

(i) In hoisting ropes, six randomly distributed broken wires in one rope lay or three broken wires in one strand in one rope lay;

(ii) Abrasion, scrubbing, flattening, or peening, causing loss of more than one-third of the original diameter of the outside wires;

(iii) Evidence of any heat damage resulting from a torch or any damage caused by contact with electrical wires;

(iv) Reduction from nominal diameter of more than three sixty-fourths inch for diameters up to and including three-fourths inch; one-sixteenth inch for diameters seven-eighths to one and one-eighth inches; and three thirty-seconds inch for diameters one and one-fourth to one and one-half inch.

(e) Hoisting ropes shall be installed in accordance with the wire rope manufacturer's recommendations.

(f) The installation of live booms on hoists is prohibited.

(g) The use of endless belt-type man lifts on construction shall be prohibited.

(h) Employees shall not be permitted to ride on top of material hoists, personnel hoists or permanent elevators except for purposes of inspection, maintenance, elevator installation or dismantling work.

(2) Material hoists.

(a)(i) Operating rules shall be established and posted at the operator's station of the hoist. Such rules shall include signal system and allowable line speed for various loads. Rules and notices shall be posted on the car frame or crosshead in a conspicuous location, including the statement "No riders allowed."

(ii) No person shall be allowed to ride on material hoists except for the purposes of inspection and maintenance.

(b) All entrances of the hoistways shall be protected by substantial gates or bars which shall guard the full width of the landing entrance. All hoistway entrance bars and gates shall be painted with diagonal contrasting colors, such as black and yellow stripes.

(i) Bars shall be not less than two- by four-inch wooden bars or the equivalent, located two feet from the hoistway line. Bars shall be located not less than thirty-six inches nor more than forty-two inches above the floor.

(ii) Gates or bars protecting the entrances to hoistway shall be equipped with a latching device.

(c) Overhead protective covering of two-inch planking, three-quarter inch plywood or other solid material of equivalent strength shall be provided on the top of every material hoist cage or platform to prevent objects falling on the workers loading or unloading the hoist.

(i) The protective covering on the top of the cage or platform may be made in hinged sections that may be raised when hoisting long material.

(ii) When using a cage or platform for long material, the several pieces of the material shall be securely fastened together and made fast to the cage or platform, so that no part of the load can fall or project beyond the sides of the cage or platform.

(d) The operator's station of a hoisting machine shall be provided with overhead protection equivalent to tight planking not less than two inches thick. The support for the overhead protection shall be of equal strength.

(e) Hoist towers may be used with or without an enclosure on all sides. However, whichever alternative is chosen, the following applicable conditions shall be met:

(i) When a hoist tower is enclosed, it shall be enclosed on all sides for its entire height with a screen enclosure of one-half inch mesh, No. 18 U.S. gauge wire or equivalent, except for landing access.

(ii) When a hoist tower is not enclosed, the hoist platform or car shall be totally enclosed (caged) on all sides for the full height between the floor and the overhead protective covering with one-half inch mesh No. 14 U.S. gauge wire or equivalent. The hoist platform enclosure shall include the required gates for loading and unloading. A six-foot high enclosure shall be provided on the unused sides of the hoist tower at ground level.

(f) Car arresting devices shall be installed to function in case of rope failure.

(g) All material hoist towers shall be designed by a licensed professional engineer.

(h) All material hoists shall conform to the requirements of ANSI A10.5-1969, Safety Requirements for Material Hoists.

(3) Personnel hoists.

(a) Personnel hoists shall be provided for access and egress on all multistory buildings where vertical travel exceeds sixty feet from a ground level access point.

(b) Hoist towers outside the structure shall be enclosed for the full height on the side or sides used for entrance and exit to the structure. At the lowest landing, the enclosure on the sides not used for exit or entrance to the structure shall be enclosed to a height of at least ten feet. Other sides of the tower adjacent to floors or scaffold platforms shall be enclosed to a height of ten feet above the level of such floors or scaffolds.

(c) Towers inside of structures shall be enclosed on all four sides throughout the full height.

(d) Towers shall be anchored to the structure at intervals not exceeding thirty feet. In addition to tie-ins, a series of guys shall be installed. Where tie-ins are not practical the tower shall be anchored by means of guys made of wire rope at least one-half inch in diameter, securely fastened to anchorages to ensure stability.

(e) Hoistway doors or gates shall be not less than six feet six inches high and shall be provided with mechanical locks which cannot be operated from the landing side, and shall be accessible only to persons on the car.

(f) Cars shall be permanently enclosed on all sides and the top, except sides used for entrance and exit, which have car gates or doors.

(g) A door or gate shall be provided at each entrance to the car which shall protect the full width and height of the car entrance opening.

(h) Overhead protective covering of two inch planking, three-quarter inch plywood or other solid material of equivalent strength shall be provided on the top of every personnel hoist.

(i) Doors or gates shall be provided with electric contacts which do not allow movement of the hoist when door or gate is opened.

(j) A signal device shall be installed in the elevator car and only operated by an attendant who shall give the signals for operation, when transporting workers.

(k) An electrical push button signaling device or other approved signaling system shall be provided at each floor landing connected to an annunciator in the car. The signal code shall be posted adjacent to the signal device at each and every work level and at operator's work level. All wording shall be black on a white card, in large clear letters.

(l) The elevator machine and controls shall be housed in as a protection against accidents and the weather, and the door kept locked against unauthorized entrance when operator is not in attendance.

(m) Safeties shall be capable of stopping and holding the car and rated load when traveling at governor tripping speed.

(n) Cars shall be provided with a capacity and data plate secured in a conspicuous place on the car or crosshead.

(o) Internal combustion engines shall not be permitted for direct drive.

(p) Normal and final terminal stopping devices shall be provided.

(q) An emergency stop switch shall be provided in the car and marked "stop."

(r) Ropes:

(i) The minimum number of hoisting ropes used shall be three for traction hoists and two for drum-type hoists.

(ii) The minimum diameter of hoisting and counterweight wire ropes shall be one-half inch.

(iii) Safety factors:

Minimum Factors of Safety for Suspension Wire Ropes

Rope speed in feet per minute:	Minimum factor of safety:
50	7.60
75	7.75
100	7.95
125	8.10
150	8.25
175	8.40
200	8.60
225	8.75
250	8.90
300	9.20
350	9.50
400	9.75
450	10.00
500	10.25
550	10.45
600	10.70

(s) Following assembly and erection of hoists, and before being put in service, an inspection and test of all functions and safety devices shall be made under the supervision of a competent person. A similar inspection and test is required following major alteration of an existing installation. All hoists shall be inspected and tested at not more than three month intervals. Records shall be maintained and kept on file for the duration of the job.

(t) All personnel hoists used by employees shall be constructed of materials and components which meet the specifications for materials, construction, safety devices, assembly, and structural integrity as stated in the American National Standard A10.4-1963, Safety Requirements for Workmen's Hoists. The requirements of this subdivision do not apply to cantilever type personnel hoists.

(u) Wire rope shall be taken out of service when any of the following conditions exist:

(i) In running ropes, six randomly distributed broken wires in one lay or three broken wires in one strand in one lay;

(ii) Wear of one-third the original diameter of outside individual wires. Kinking, crushing, bird caging, or any other damage resulting in distortion of the rope structure;

(iii) Evidence of any heat damage from any cause;

(iv) Reductions from nominal diameter of more than three-sixty-fourths inch for diameters to and including three-fourths inch, one-sixteenth inch for diameter seven-eighths inch to one and one-eighth inches inclusive; three-thirty-seconds inch for diameters one and one-fourth to one and one-half inches inclusive;

(v) In standing ropes, more than two broken wires in one lay in sections beyond end connections or more than one broken wire at an end connection.

(A) Personnel hoists used in bridge tower construction shall be approved by a registered professional engineer and erected under the supervision of a qualified engineer competent in this field.

(B) When a hoist tower is not enclosed, the hoist platform or car shall be totally enclosed (caged) on all sides for the full height between the floor and the overhead protective covering with three-quarter inch mesh of No. 14 U.S. gauge wire or equivalent. The hoist platform enclosure shall include the required gates for loading and unloading.

(C) These hoists shall be inspected and maintained on a weekly basis. Whenever the hoisting equipment is exposed to winds exceeding thirty-five miles per hour it shall be inspected and put in operable condition before reuse.

(4) All elevators, manlifts, or other lifting devices must be installed and maintained in conformity with the requirements specified in the Washington state elevator laws and regulations adopted by the elevator section of the department of labor and industries.

Note: For additional information refer to chapter 296-96 WAC, Safety regulations and fees for all elevators, dumbwaiters, escalators and other conveyances.

[Statutory Authority: RCW 49.17.010, 49.17.040, 49.17.050, 49.17.440, 49.17.060, and 29 C.F.R. 1926, Subpart CC. WSR 12-01-086, § 296-155-77105, filed 12/20/11, effective 2/1/12.]

WAC 296-155-77110 Base-mounted drum hoists. (1) General requirements.

(a) Exposed moving parts such as gears, projecting screws, setscrews, chain, cables, chain sprockets, and reciprocating or rotating parts, which constitute a hazard, shall be guarded.

(b) All controls used during the normal operation cycle shall be located within easy reach of the operator's station.

(c) Electric motor operated hoists shall be provided with:

(i) A device to disconnect all motors from the line upon power failure and not permit any motor to be restarted until the controller handle is brought to the "off" position;

(ii) Where applicable, an overspeed preventive device;

(iii) A means whereby remotely operated hoists stop when any control is ineffective.

(d) All base-mounted drum hoists in use shall meet the applicable requirements for design, construction, installation, testing, inspection, maintenance, and operation, as prescribed by the manufacturer.

(2) Specific requirements. (Reserved.)

[Statutory Authority: RCW 49.17.010, 49.17.040, 49.17.050, 49.17.440, 49.17.060, and 29 C.F.R. 1926, Subpart CC. WSR 12-01-086, § 296-155-77110, filed 12/20/11, effective 2/1/12.]

WAC 296-155-77115 Overhead hoists. (1) General requirements.

(a) The safe working load of the overhead hoist, as determined by the manufacturer, shall be indicated on the hoist, and this safe working load shall not be exceeded.

(b) The supporting structure to which the hoist is attached shall have a safe working load equal to that of the hoist.

(c) The support shall be arranged so as to provide for free movement of the hoist and shall not restrict the hoist from lining itself up with the load.

(d) The hoist shall be installed only in locations that will permit the operator to stand clear of the load at all times.

(e) Air hoists shall be connected to an air supply of sufficient capacity and pressure to safely operate the hoist. All air hoses supplying air shall be positively connected to prevent their becoming disconnected during use.

(f) All overhead hoists in use shall meet the applicable requirements for construction, design, installation, testing, inspection, maintenance, and operation, as prescribed by the manufacturer.

(2) Specific requirements. (Reserved.)

[Statutory Authority: RCW 49.17.010, 49.17.040, 49.17.050, 49.17.440, 49.17.060, and 29 C.F.R. 1926, Subpart CC. WSR 12-01-086, § 296-155-77115, filed 12/20/11, effective 2/1/12.]

WAC 296-155-77120 Conveyors. (1) All conveyors in use shall meet the applicable requirements for design, construction, inspection, testing, maintenance, and operation, as prescribed in ANSI B20.1-1976, Safety Code for Conveyors, Cableways, and Related Equipment.

(2) Starting precautions.

(a) When the entire length of a conveyor is visible from the starting switch, the operator shall visually check to make certain that all persons are in the clear before starting the conveyor.

(b) When the entire length of the conveyor is not visible from the starting switch, a positive audible or visible warning system shall be installed and operated to warn persons that the conveyor will be started.

(c) All reasonable precautions shall be taken by the operator prior to starting a conveyor, to assure that no person is in a hazardous location where they may be injured when the conveyor is started.

(3) Riding and walking on conveyors.

(a) Riding on conveyor chains, belt, or bucket elevators shall be prohibited.

(b) Persons shall not be allowed to walk on conveyors except for emergency purposes and then only after the conveyor has been deenergized and the person can do so safely.

(c) Riding of conveyors shall only be permitted on the manlift steps and platforms with handholds attached and other safety factors as specified in chapter 296-96 WAC, Safety regulations and fees for all elevators, dumbwaiters, escalators, and other conveyances.

(4) Stop controls.

(a) Means for stopping the motor or engine of a conveyor shall be provided at the operator's station.

(b) If the operator's station is at a remote point, similar provisions for stopping the motor or engine shall be provided at the motor or engine location.

(5) Emergency controls. Emergency stop switches shall be arranged so that the conveyor cannot be started again until the actuating stop switch has been reset to running or "on" position.

(6) Screw type conveyors. Screw or auger type conveyors shall be guarded to prevent employee contact with turning flights.

(7) Overhead conveyors.

(a) Where a conveyor passes over work areas, aisles, or thoroughfares, guards shall be provided to protect persons required to work below the conveyors.

(b) Where a conveyor crosses over an aisle or passageway, it shall be conspicuously marked by suitable signs, as required by Part E of this chapter.

(c) When the return strand of a conveyor operates within seven feet of the floor there shall be a trough provided of sufficient strength to carry the weight resulting from a broken chain. If the strands are over a passageway, a means shall be provided to catch and support the ends of the chain in the event of a break.

(8) Emergency stop.

(a) Conveyors shall be provided with an emergency stopping device (panic-type) which can be reached from the conveyor.

(b) The emergency stopping device shall be located near the material entrance and shall stop the conveyor a sufficient distance away from the hazard to prevent injury.

(c) Where the conveyor leading into such equipment is under constant control of an operator who has full view of the material entrance who is located or restrained where they cannot possibly fall onto the conveyor an emergency stopping device is not mandatory.

(9) Conveyor lockout.

(a) Conveyors shall be locked out with a padlock at any time repair, maintenance, or clean-up work is being performed.

(b) Tags or push-button stops are not acceptable.

(10) Where conveyors are in excess of seven feet in height, means shall be provided to safely permit essential inspection and maintenance operations.

(11) Conveyor repair.

(a) Any part showing signs of significant wear shall be inspected carefully and replaced prior to reaching a condition where it may create a hazard.

(b) Replacement parts shall be equal to or exceed the manufacturer's specifications.

[Statutory Authority: RCW 49.17.010, 49.17.040, 49.17.050, 49.17.440, 49.17.060, and 29 C.F.R. 1926, Subpart CC. WSR 12-01-086, § 296-155-77120, filed 12/20/11, effective 2/1/12.]

WAC 296-155-77125 Aerial cableways. (1) Cableways shall be designed to withstand the maximum required load with a safety factor of five on all its parts.

(2) Safety stay lines shall be installed at anchor ends and equal in strength to the cableway.

(3) Where towers are required they shall be securely guyed or constructed to carry the maximum sustained load.

(4) Towers shall be provided with ladderways to facilitate safe access for repairs and inspections.

(5) Towers shall have sufficient elevation to provide substantial clearance for cableway and loads carried over all contemplated work.

(6) Running lines and sheaves, where accessible, shall be guarded.

(7) The carrier, carrier sheaves, bearings, bucket latch and all working parts shall be lubricated and visually inspected daily.

(8) All the wire ropes shall be kept lubricated with proper lubricant.

(9) Daily visual inspection shall be made of the button line, especially at the buttons where abrasion is caused by the carrier rebound. Runner and steel ferrule shock absorbers shall be placed at each end of buttons.

(10) All loading, unloading and working stations shall be adequately lighted for night operation. Clearance lights shall be installed on all high points under cableway.

[Statutory Authority: RCW 49.17.010, 49.17.040, 49.17.050, 49.17.440, 49.17.060, and 29 C.F.R. 1926, Subpart CC. WSR 12-01-086, § 296-155-77125, filed 12/20/11, effective 2/1/12.]

WAC 296-155-77130 Concrete bucket towers. (1) A concrete bucket tower located inside a structure, and which is three feet or less from any scaffold or the edge of the shaftway or floor opening in which it is installed, shall be enclosed on all sides with heavy wire netting formed of No. 16 U.S. gauge one and one-half inch mesh. Wood slats placed vertically and spaced not more than one and one-half inches apart may be used instead of the netting. The enclosure shall extend at least eight feet above such scaffold or floor.

(2) A concrete bucket tower located outside a structure shall be enclosed to a height of eight feet at lower landing with heavy wire netting formed of No. 16 U.S. gauge wire one and one-half inch mesh or other suitable material.

(3) Openings with platforms shall be formed at each floor level, and the runway leading to the tower shall be guarded with standard railings and toeboards.

(4) If the bucket is discharged into a chute, the chute shall be substantially constructed of wood or metal and extend from the tower to the point where the concrete is to be poured, or transferred to vehicles or hoppers, and the chute shall be substantially supported.

(5) The pit shall be drained and deep enough so that any spill from the bucket will fall below the blocking on which the bucket rests while being filled.

(6) Persons shall not be allowed to work in the pit without first resting the bucket on strong timbers supported on two sides of the tower.

(7) The bucket tower shall be securely guyed at two or more elevations as may be necessary.

(8) The guide rails shall be carefully aligned and kept in good condition to prevent the bucket being caught or clogged while being hoisted.

(9) The sheaves over which the cable passes shall be firmly secured to overhead sheave beams and supporting frame work and the sheaves shall be kept lubricated.

(10) The hoisting cable shall be frequently inspected and renewed when broken wires or other defects are discovered.

(11) A platform provided with standard railings and toeboards shall be constructed at the point where the concrete is dumped into the chute. A ladder shall be fastened to one side of the tower to enable a person to reach the platform safely.

(12) Workers shall be prohibited from riding in or on the bucket.

[Statutory Authority: RCW 49.17.010, 49.17.040, 49.17.050, 49.17.440, 49.17.060, and 29 C.F.R. 1926, Subpart CC. WSR 12-01-086, § 296-155-77130, filed 12/20/11, effective 2/1/12.]

WAC 296-155-77135 Hoisting engines. (1) All gearing on hoisting engines shall be enclosed. Steam piping subject to contact shall be insulated and if electrical equipment is used, it shall be grounded.

(2) Hoisting engines shall be of ample capacity and equipped with brakes capable of sustaining one hundred fifty percent of rated load for stopping and sustaining the maximum load in any position.

(3) Hoisting engines shall be protected against the weather and falling objects by a substantial cover.

(4) All hoisting equipment shall be frequently inspected, and brakes, gears and operating levers kept in working condition.

(5) Guards shall be provided to prevent persons coming in contact with hoisting cables.

(6) Brake drums shall be kept free of oil or grease.

(7) A positive operated pawl shall be used in addition to the brake to hold the load when it is suspended. Counter weight operated dogs are prohibited.

(8) Hoisting engines shall not be set up in the street when it can be avoided; but, if so located, they shall be completely housed.

(9) Only competent personnel shall operate material hoists.

(10) The operator shall not lift a load when a person is on the hoist, and all towers shall be posted to that effect, except as provided in other sections of this part.

(11) The operator shall be notified when any person goes up the tower ladder, or before any work is done on any part of the tower, overhead work, hoist or in the pit.

(12) The operator shall make daily inspections of all equipment before starting operations.

(13) When the hoisting engine is located close to the building operation, it shall be covered with a strong plank roof covering to protect the operator from falling objects.

(14) Exhaust steam pipes shall be discharged overhead so as not to obstruct the view of the operator or scald persons.

(15) In the operation of hoists, the operator shall always give a warning sign or signal before starting.

(16) When hoisting machinery is set on an elevated platform such platform shall be of substantial construction and standard guard rails and toeboards shall be provided along all open sides of the platform.

(17) Material hoists of more than one drum capacity shall be equipped with brake controls.

(18) A safety strap shall be provided on the foot block of all hoists.

(19) When electric motors are used for hoisting equipment, they shall be operated only by qualified personnel.

(a) Installations shall be made in accordance with provisions of local and national electrical safety codes, and shall be made by experienced workers only.

(b) Enclosed switches and fuses shall always be used.

(c) Switchboards shall be screened, and a sign placed warning unauthorized persons to keep clear.

[Statutory Authority: RCW 49.17.010, 49.17.040, 49.17.050, 49.17.440, 49.17.060, and 29 C.F.R. 1926, Subpart CC. WSR 12-01-086, § 296-155-77135, filed 12/20/11, effective 2/1/12.]

PART S

DEMOLITION

WAC 296-155-775 Preparatory operations. (1) Prior to permitting employees to start demolition operations, an engineering survey shall be made, by a competent person, of the structure to determine structural integrity and the possibility of unplanned collapse of any portion of the structure. Any adjacent structure where employees may be exposed shall also be similarly checked. The employer shall have in writing, evidence that such a survey has been performed.

(2) A copy of the survey report and of the plans and/or methods of operations shall be maintained at the job site for the duration of the demolition operation.

(3) Any device or equipment such as scaffolds, ladders, derricks, hoists, etc., used in connection with demolition work shall be constructed, installed, inspected, maintained and operated in accordance with the regulations governing the construction, installation, inspection, maintenance and operation of such device or equipment as specified in other parts of this chapter.

(4) Federal and state codes, safety standards, rules, regulations, and ordinances governing any and all phases of demolition work shall be observed at all times.

(5) Demolition of all buildings and structures shall be conducted under competent supervision, and safe working conditions shall be afforded the employees.

(6) When employees are required to work within a structure to be demolished which has been damaged by fire, flood, explosion, or other cause, the walls or floor shall be shored or braced.

(7) All electric, gas, water, steam, sewer, and other service lines shall be shut off, capped, or otherwise controlled, outside the building line before demolition work is started. In each case, any utility company which is involved shall be notified in advance.

(8) If it is necessary to maintain any power, water or other utilities during demolition, such lines shall be temporarily relocated, as necessary, and protected.

(9) It shall be determined whether asbestos, hazardous materials, hazardous chemicals, gases, explosives, flammable materials, or similarly dangerous substances are present at the work site. When the presence of any such substance is apparent or suspected, testing and removal or purging shall be performed and the hazard eliminated before demolition is started. Removal of such substances shall be in accordance with the requirements of chapters 296-62 and 296-65 WAC.

(10) Where a hazard exists from fragmentation of glass, such hazards shall be removed.

(11) Where a hazard exists to employees falling through wall openings, the opening shall be protected to a height of between thirty-six and forty-two inches.

(12) When debris is dropped without the use of chutes, the area onto which the material is dropped shall be completely enclosed with barricades not less than forty-two inches high and not less than twenty feet back from the projected edge of the opening above. Signs, warning of the hazard of falling materials, shall be posted at each level. Removal shall not be permitted in this lower area until debris handling ceases above.

(13) All floor openings, not used as material drops, shall be covered over with material substantial enough to support the weight of any load which may be imposed. Such material shall be properly secured to prevent its accidental movement.

(14) Except for the cutting of holes in floors for chutes, holes through which to drop materials, preparation of storage space, and similar necessary preparatory work, the demolition of exterior walls and floor construction shall begin at the top of the structure and proceed downward. Each story of exterior wall and floor construction shall be removed and dropped into the storage space before commencing the removal of exterior walls and floors in the story next below.

(15) Workers shall not be permitted to carry on a demolition operation which will expose persons working on a lower level to danger.

(16) Employee entrances to multistory structures being demolished shall be completely protected by sidewalk sheds or canopies, or both, providing protection from the face of the building for a minimum of eight feet. All such canopies shall be at least two feet wider than the building entrances or openings (one foot wider on each side thereof), and shall be capable of sustaining a load of one hundred fifty pounds per square foot.

(17) Protruding nails in boards, planks and timber shall be withdrawn, driven in or bent over as soon as the same is removed from the structure being demolished.

(18) Any material to be removed which will cause dust to be formed, shall be sprinkled with water to lay the dust incidental to its removal.

[Statutory Authority: Chapter 49.17 RCW. WSR 94-15-096 (Order 94-07), § 296-155-775, filed 7/20/94, effective 9/20/94; WSR 87-24-051 (Order 87-24), § 296-155-775, filed 11/30/87. Statutory Authority: RCW 49.17.050(2) and 49.17.040. WSR 87-10-008 (Order 87-06), § 296-155-775, filed 4/27/87. Statutory Authority: RCW 49.17.040 and 49.17.050. WSR 86-03-074 (Order 86-14), § 296-155-775, filed 1/21/86; Order 74-26, § 296-155-775, filed 5/7/74, effective 6/6/74.]

WAC 296-155-780 Stairs, passageways, and ladders. (1) Only those stairways, passageways, and ladders, designated as means of access to the structure of building, shall be used. Other access ways shall be entirely closed off at all times.

(2) All stairs, passageways, ladders and incidental equipment thereto, which are covered by this section, shall be periodically inspected and maintained in a clean safe condition.

(3) All ladders shall be secured in position.

(4) In a multistory building, when a stairwell is being used, it shall be properly illuminated by either natural or artificial means, and completely and substantially covered over at a point not less than two floors below the floor on which work is being performed. Access to the floor where the work

is in progress shall be through a properly lighted, protected, and separate passageway.

[Order 74-26, § 296-155-780, filed 5/7/74, effective 6/6/74.]

WAC 296-155-785 Chutes. (1) No material shall be dropped to any point lying outside the exterior walls of the structure unless the area is effectively protected.

(2) All materials chutes, or sections thereof, at an angle of more than 45° from the horizontal, shall be entirely enclosed, except for openings equipped with closures at or about floor level for the insertion of materials. The openings shall not exceed 48 inches in height measured along the wall of the chute. At all stories below the top floor, such openings shall be kept closed when not in use.

(3) A substantial gate shall be installed in each chute at or near the discharge end. A competent employee shall be assigned to control the operation of the gate, and the backing and loading of trucks.

(4) When operations are not in progress, the area surrounding the discharge end of a chute shall be securely closed off.

(5) Any chute opening, into which workers dump debris, shall be protected by a substantial guardrail between 36 and 42 inches above the floor or other surface on which the employees stand to dump the material. Any space between the chute and the edge of openings in the floors through which it passes shall be solidly covered over.

(6) Where the material is dumped from mechanical equipment or wheelbarrows, a securely attached toeboard or bumper, not less than 4 inches thick and 6 inches high, shall be provided at each chute opening.

(7) Chutes shall be designed and constructed of such strength as to eliminate failure due to impact of materials or debris loaded therein.

[Statutory Authority: Chapter 49.17 RCW. WSR 94-15-096 (Order 94-07), § 296-155-785, filed 7/20/94, effective 9/20/94; Order 74-26, § 296-155-785, filed 5/7/74, effective 6/6/74.]

WAC 296-155-790 Removal of materials through floor openings. Any openings cut in a floor for the disposal of materials shall be no larger in size than 25 percent of the aggregate of the total floor area, unless the lateral supports of the removed flooring remain in place. Floors weakened or otherwise made unsafe by demolition operations shall be shored to carry safely the intended imposed load from demolition operations.

[Order 74-26, § 296-155-790, filed 5/7/74, effective 6/6/74.]

WAC 296-155-795 Removal of walls, masonry sections, and chimneys. (1) Masonry walls, or other sections of masonry, shall not be permitted to fall upon the floors of the building in such masses as to exceed the safe carrying capacities of the floors.

(2) No wall section, which is more than one story in height, shall be permitted to stand alone without lateral bracing, unless such wall was originally designed and constructed to stand without such lateral support, and is in a condition safe enough to be self-supporting. All walls shall be left in a stable condition at the end of each shift.

(3) Employees shall not be permitted to work on the top of a wall when weather conditions constitute a hazard.

(4) Structural or load-supporting members on any floor shall not be cut or removed until all stories above such a floor have been demolished and removed. This provision shall not prohibit the cutting of floor beams for the disposal of materials or for the installation of equipment, provided that the requirements of WAC 296-155-790 and 296-155-800 are met.

(5) Floor openings within 10 feet of any wall being demolished shall be planked solid, except when employees are kept out of the area below.

(6) In buildings of "skeleton-steel" construction, the steel framing may be left in place during the demolition of masonry. Where this is done, all steel beams, girders, and similar structural supports shall be cleared of all loose material as the masonry demolition progresses downward.

(7) Walkways or ladders shall be provided to enable employees to safely reach or leave any scaffold or wall.

(8) Walls, which serve as retaining walls to support earth or adjoining structures, shall not be demolished until such earth has been properly braced or adjoining structures have been properly underpinned.

(9) Walls, which are to serve as retaining walls against which debris will be piled, shall not be so used unless capable of safely supporting the imposed load.

[Order 74-26, § 296-155-795, filed 5/7/74, effective 6/6/74.]

WAC 296-155-800 Manual removal of floors. (1) Openings cut in a floor shall extend the full span of the arch between supports.

(2) Before demolishing any floor arch, debris and other material shall be removed from such arch and other adjacent floor area. Planks not less than 2 inches by 10 inches in cross section, full size undressed, shall be provided for, and shall be used by employees to stand on while breaking down floor arches between beams. Such planks shall be so located as to provide a safe support for the workers should the arch between the beams collapse. The open space between planks shall not exceed 16 inches.

(3) Safe walkways, not less than 18 inches wide, formed of planks not less than 2 inches thick if wood, or of equivalent strength if metal, shall be provided and used by workers when necessary to enable them to reach any point without walking upon exposed beams.

(4) Stringers of ample strength shall be installed to support the flooring planks, and the ends of such stringers shall be supported by floor beams or girders, and not by floor arches alone.

(5) Planks shall be laid together over solid bearings with the ends overlapping at least 1 foot.

(6) When floor arches are being removed, employees shall not be allowed in the area directly underneath, and such an area shall be barricaded to prevent access to it.

(7) Demolition of floor arches shall not be started until they, and the surrounding floor area for a distance of 20 feet, have been cleared of debris and any other unnecessary materials.

[Statutory Authority: Chapter 49.17 RCW. WSR 94-15-096 (Order 94-07), § 296-155-800, filed 7/20/94, effective 9/20/94; Order 74-26, § 296-155-800, filed 5/7/74, effective 6/6/74.]

WAC 296-155-805 Removal of walls, floors, and material with equipment. (1) Mechanical equipment shall not be used on floors or working surfaces unless such floors or surfaces are of sufficient strength to support the imposed load.

(2) Floor openings shall have curbs or stop-logs to prevent equipment from running over the edge.

(3) Mechanical equipment used shall meet the requirements specified in parts M and R of this chapter, cranes must meet the requirements in Part L of this chapter.

[Statutory Authority: RCW 49.17.010, 49.17.040, 49.17.050, 49.17.440, 49.17.060, and 29 C.F.R. 1926, Subpart CC. WSR 12-01-086, § 296-155-805, filed 12/20/11, effective 2/1/12; Order 74-26, § 296-155-805, filed 5/7/74, effective 6/6/74.]

WAC 296-155-810 Catch platforms. (1) During the demolition of the exterior walls of a structure originally more than seventy feet high, catch platforms shall be erected along the exterior faces of such walls where necessary to prevent injury to persons working below.

(2) Such catch platforms shall be constructed and maintained not more than three stories below the story from which the exterior walls are being removed, until the demolition has progressed to within three stories of the ground level.

(3) Catch platforms shall not be less than five feet in width measured in a horizontal distance from the face of the structure and constructed of outriggers and planks. Planks shall be laid tight together and without openings between the planks and the wall.

Note: Catch platforms may be constructed of other approved materials of equal strength and security against falling material.

(4) Catch platforms shall be capable of sustaining a uniform live load of not less than one hundred and twenty-five pounds per square foot.

[Order 74-26, § 296-155-810, filed 5/7/74, effective 6/6/74.]

WAC 296-155-815 Storage. (1) The storage of waste material and debris on any floor shall not exceed the allowable floor loads.

(2) In buildings having wooden floor construction, the flooring boards may be removed from not more than one floor above grade to provide storage space for debris, provided falling material is not permitted to endanger the stability of the structure.

(3) When wood floor beams serve to brace interior walls or free-standing exterior walls, such beams shall be left in place until other equivalent support can be installed to replace them.

(4) Floor arches, to an elevation of not more than 25 feet above grade, may be removed to provide storage area for debris: Provided, That such removal does not endanger the stability of the structure.

(5) Storage space into which material is dumped shall be blocked off, except for openings necessary for the removal of material. Such openings shall be kept closed at all times when material is not being removed.

[Order 74-26, § 296-155-815, filed 5/7/74, effective 6/6/74.]

WAC 296-155-820 Removal of steel construction. (1) When floor arches have been removed, planking in accordance with WAC 296-155-800(2) shall be provided for the workers engaged in razing the steel framing.

(2) Cranes and derricks used shall meet the requirements specified in Part L of this chapter. Other hoisting equipment must meet the requirements in Part R of this chapter.

(3) Steel construction shall be dismantled column length by column length, and tier by tier (columns may be in two-story lengths).

(4) Any structural member being dismembered shall not be overstressed.

[Statutory Authority: RCW 49.17.010, 49.17.040, 49.17.050, 49.17.440, 49.17.060, and 29 C.F.R. 1926, Subpart CC. WSR 12-01-086, § 296-155-820, filed 12/20/11, effective 2/1/12; Order 74-26, § 296-155-820, filed 5/7/74, effective 6/6/74.]

WAC 296-155-825 Mechanical demolition. (1) No workers shall be permitted in any area, which can be adversely affected by demolition operations, when balling or clamming is being performed. Only those workers necessary for the performance of the operations shall be permitted in this area at any other time.

(2) The weight of the demolition ball shall not exceed 50 percent of the crane's rated load, based on the length of the boom and the maximum angle of operation at which the demolition ball will be used, or it shall not exceed 25 percent of the nominal breaking strength of the line by which it is suspended, whichever results in a lesser value.

(3) The crane boom and loadline shall be as short as possible.

(4) The ball shall be attached to the loadline with a swivel-type connection to prevent twisting of the loadline, and shall be attached by positive means in such manner that the weight cannot become accidentally disconnected.

(5) When pulling over walls or portions thereof, all steel members affected shall have been previously cut free.

(6) All roof cornices or other such ornamental stonework shall be removed prior to pulling walls over.

(7) During demolition, continuing inspections by a competent person shall be made as the work progresses to detect hazards resulting from weakened or deteriorated floors, or walls, or loosened material. No employee shall be permitted to work where such hazards exist until they are corrected by shoring, bracing, or other effective means.

[Order 74-26, § 296-155-825, filed 5/7/74, effective 6/6/74.]

WAC 296-155-830 Selective demolition by explosives. Selective demolition by explosives shall comply with chapter 296-52 WAC.

[Statutory Authority: RCW 49.17.040 and 49.17.050. WSR 86-03-074 (Order 86-14), § 296-155-830, filed 1/21/86; Order 74-26, § 296-155-830, filed 5/7/74, effective 6/6/74.]

PART U

POWER DISTRIBUTION AND TRANSMISSION LINES

Refer to chapter 296-45 WAC, "Safety standards for electrical workers."

PART V

ROLLOVER PROTECTIVE STRUCTURES AND OVERHEAD PROTECTION

WAC 296-155-950 Rollover protective structures (ROPS) for material handling equipment. (1) Coverage.

(a) This section applies to the following types of material handling equipment: To all rubber-tired, self-propelled scrapers, rubber-tired front-end loaders, rubber-tired dozers, wheel-type agricultural and industrial tractors, crawler tractors, crawler-type loaders, and motor graders, with or without attachments, that are used in construction work. This requirement does not apply to sideboom pipelaying tractors.

(b) The promulgation of specific standards for rollover protective structures for compactors and rubber-tired skid-steer equipment is reserved pending consideration of standards currently being developed.

(2) Equipment manufactured on or after September 1, 1972, Material handling machinery described in subsection (1) of this section and manufactured on or after September 1, 1972, shall be equipped with rollover protective structures which meet the minimum performance standards prescribed in WAC 296-155-955 and 296-155-960, as applicable.

(3) Equipment manufactured before September 1, 1972.

(a) All material handling equipment described in subsection (1) of this section and manufactured or placed in service (owned or operated by the employer) prior to September 1, 1972, shall be fitted with rollover protective structures.

Machines manufactured before July 1, 1969; Reserved pending further study, development, and review.

(b) Rollover protective structures and supporting attachment shall meet the minimum performance criteria detailed in WAC 296-155-955 and 296-155-960, as applicable or shall be designed, fabricated, and installed in a manner which will support, based on the ultimate strength of the metal, at least two times the weight of the prime mover applied at the point of impact.

(i) The design objective shall be to minimize the likelihood of a complete overturn and thereby minimize the possibility of the operator being crushed as a result of a rollover or upset.

(ii) The design shall provide a vertical clearance of at least 52 inches from the work deck to the ROPS at the point of ingress or egress.

(4) Remounting. ROPS removed for any reason, shall be remounted with equal quality, or better, bolts or welding as required for the original mounting.

(5) Labeling. Each ROPS shall have the following information permanently affixed to the structure:

(a) Manufacturer or fabricator's name and address;

(b) ROPS model number, if any;

(c) Machine make, model, or series number that the structure is designed to fit.

(6) Machines meeting certain existing governmental requirements. Any machine in use, equipped with rollover protective structures, shall be deemed in compliance with this section if it meets the rollover protective structures requirements of the U.S. Army Corps of Engineers, or the Bureau of Reclamation of the U.S. Department of the Interior in effect on April 5, 1972. The requirements in effect are:

(a) U.S. Army Corps of Engineers: General Safety Requirements, EM-385-1-1 (March 1967).

(b) Bureau of Reclamation, U.S. Department of the Interior: Safety and Health Regulations for Construction, Part II (September 1971).

(7) ROPS meeting the criteria set forth in SAE J1040 a and SAE J1040 b shall be regarded as substantially meeting the requirements of this section, even if they do not meet all the criteria set forth in earlier criteria documents on which the present standard is based.

[Statutory Authority: Chapter 49.17 RCW. WSR 91-03-044 (Order 90-18), § 296-155-950, filed 1/10/91, effective 2/12/91. Statutory Authority: RCW 49.17.040 and 49.17.050. WSR 86-03-074 (Order 86-14), § 296-155-950, filed 1/21/86; Order 76-29, § 296-155-950, filed 9/30/76; Order 74-26, § 296-155-950, filed 5/7/74, effective 6/6/74.]

WAC 296-155-955 Minimum performance criteria for rollover protective structures for designated scrapers, loaders, dozers, graders, and crawler tractors. (1) Definitions. For purposes of this section, "vehicle weight" means the manufacturer's maximum weight of the prime mover for rubber-tired self-propelled scrapers. For other types of equipment to which this section applies, "vehicle weight" means the manufacturer's maximum recommended weight of the vehicle plus the heaviest attachment.

(2) General.

(a) This section prescribes minimum performance criteria for rollover protective structures (ROPS) for rubber-tired self-propelled scrapers; rubber-tired front-end loaders and rubber-tired dozers; crawler tractors, and crawler-type loaders, and motor graders. The vehicle and ROPS as a system shall have the structural characteristics prescribed in subsection (7) of this section for each type of machine described in this subsection.

(b) Equipment listed in subsection (2)(a) of this section may be exempted from the requirements for fitment of ROPS where it can be shown, to the satisfaction of the department, that the equipment will only be used where no rollover hazard will exist.

(3) The static laboratory test prescribed herein will determine the adequacy of the structures used to protect the operator under the following conditions:

(a) For rubber-tired self-propelled scrapers, rubber-tired front-end loaders, and rubber-tired dozers: Operating between 0 and 10 miles per hour over hard clay where rollover would be limited to a maximum roll angle of 360° down a slope of 30° maximum.

(b) For motor graders: Operating between 0 and 10 miles per hour over hard clay where rollover would be limited to 360° down a slope of 30° maximum.

(c) For crawler tractors and crawler-type loaders: Operating between 0 and 10 miles per hour over hard clay where rollover would be limited to a maximum roll angle of 360° down a slope of 45°.

(4) Facilities and apparatus.

(a) The following material is necessary:

(i) Material, equipment, and tiedown means adequate to ensure that the ROPS and its vehicle frame absorb the applied energy.

(ii) Equipment necessary to measure and apply loads to the ROPS. Adequate means to measure deflection and lengths should also be provided.

(iii) Recommended, but not mandatory, types of test setups are illustrated in Figure V-1 for all types of equipment to which this section applies; and in Figure V-2 for rubber-tired self-propelled scrapers; Figure V-3 for rubber-tired front-end loaders, rubber-tired dozers, and motor graders; and Figure V-4 for crawler tractors and crawler-type loaders.

(b) Table V-1 contains a listing of the required apparatus for all types of equipment described in subsection (2)(a) of this section.

TABLE V-1

Means to measure	Accuracy
Deflection of ROPS, inches	± 5% of deflection measured.
Vehicle weight, pounds	± 5% of the weight measured.
Force applied to frame, pounds	± 5% of force measured.
Dimensions of critical zone, inches.	± 0.5 in.

(5) Vehicle condition. The ROPS to be tested must be attached to the vehicle structure in the same manner as it will be attached during vehicle use. A totally assembled vehicle is not required. However, the vehicle structure and frame which support the ROPS must represent the actual vehicle installation. All normally detachable windows, panels, or nonstructural fittings shall be removed so that they do not contribute to the strength of the ROPS.

(6) Test procedure. The test procedure shall include the following, in the sequence indicated:

(a) Energy absorbing capabilities of ROPS shall be verified when loaded laterally by incrementally applying a distributed load to the longitudinal outside top member of the ROPS, as shown in Figure V-1, V-2 or V-3 as applicable. The distributed load must be applied so as to result in approximately uniform deflection of the ROPS. The load increments should correspond with approximately 0.5 in. ROPS deflection increment in the direction of the load application, measured at the ROPS top edge. Should the operator's seat be off center, the load shall be applied on the off center side. For each applied load increment, the total load (lb.) versus corresponding deflection (in.) shall be plotted, and the area under the load-deflection curve shall be calculated. This area is equal to the energy (in.-lb.) absorbed by the ROPS. For a typical load-deflection curve and calculation method, see Figure V-5.

Incremental loading shall be continued until the ROPS has absorbed the amount of energy and the minimum applied load specified under subsection (7) of this section has been reached or surpassed.

(b) To cover the possibility of the vehicle coming to rest on its top, the support capability shall be verified by applying a distributed vertical load to the top of the ROPS so as to result in approximately uniform deflection (see Figure V-1). The load magnitude is specified in subsection (7)(b)(iii) of this section.

(c) The low temperature impact strength of the material used in the ROPS shall be verified by suitable material tests or material certification (see subsection (7)(b)(iv) of this section).

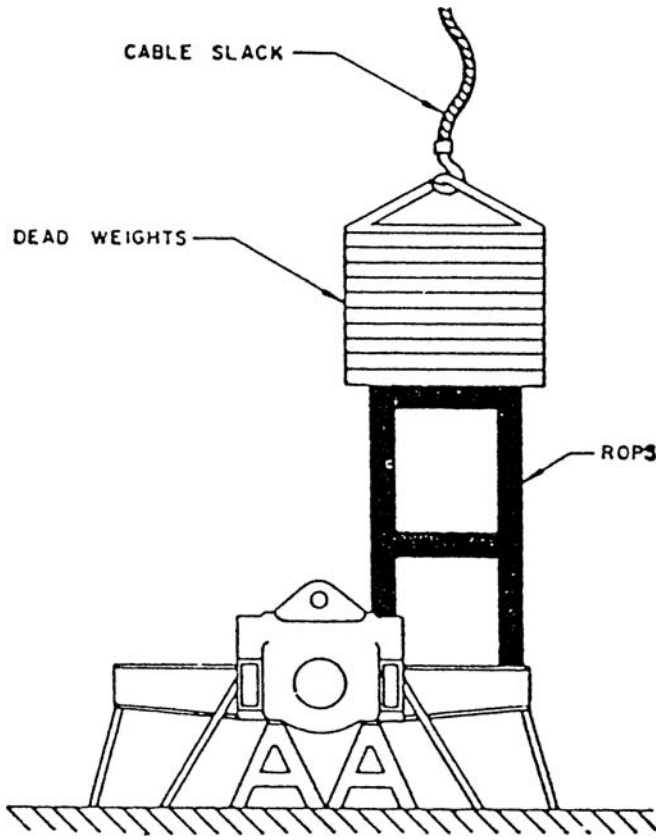

FIGURE V-1
Vertical loading setup for all types of equipment described in WAC 296-155-955(1).

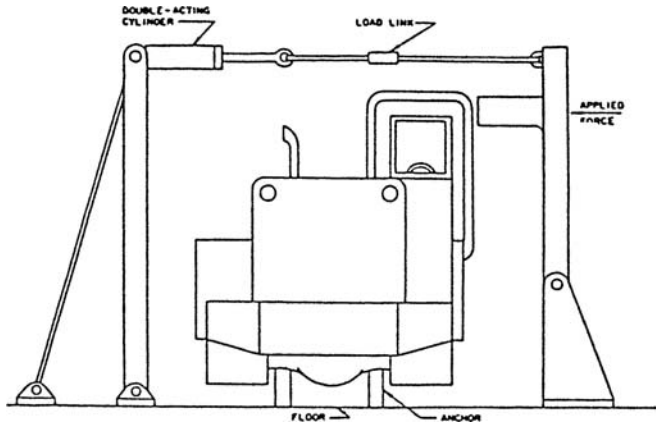

FIGURE V-2
Test setup for rubber-tired self-propelled scrapers.

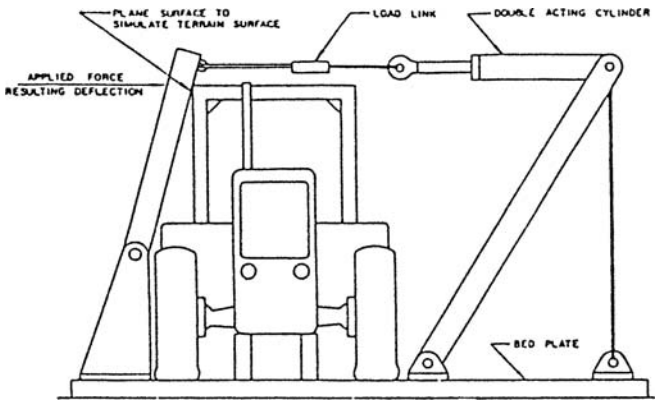

FIGURE V-3
Test setup for rubber-tired front-end loaders, rubber-tired dozers, and motor graders.

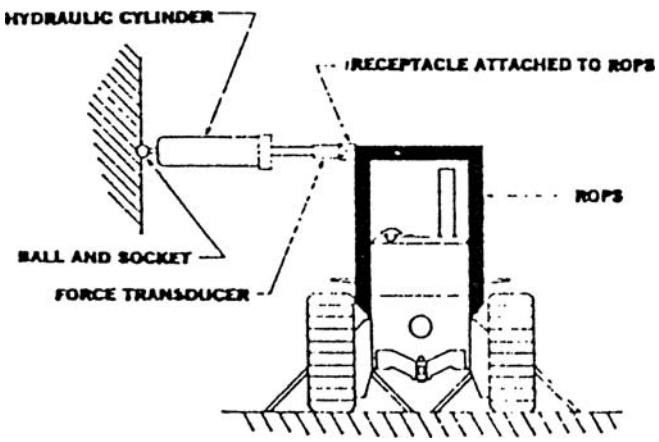

FIGURE V-4
Side-loading setup for crawler tractors and crawler loaders.

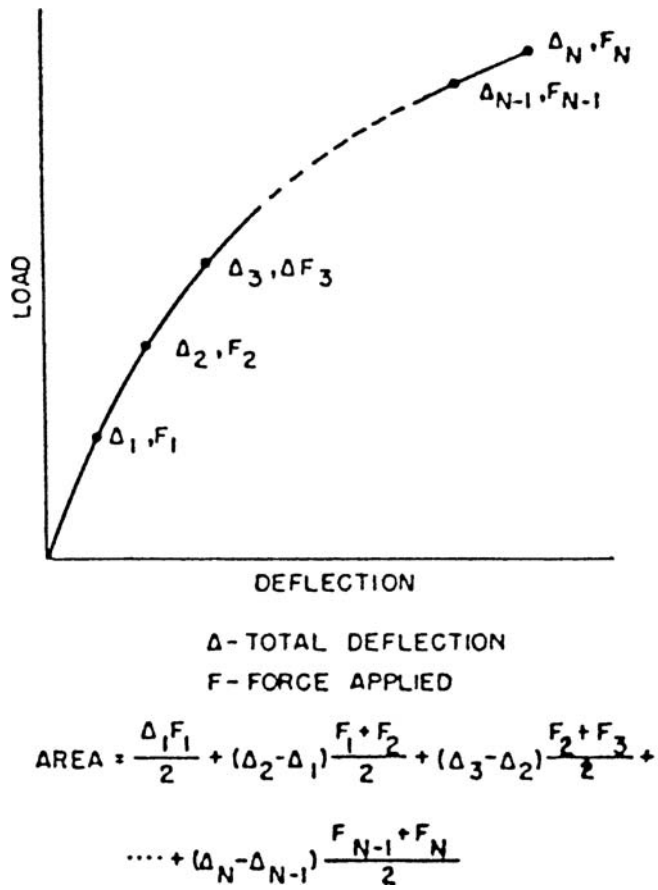

FIGURE V-5
Determination of energy area under force deflection curve for all types of ROPS equipment defined in WAC 296-155-955.

(7) Performance requirements.

(a) General performance requirements.

(i) No repairs or straightening of any member shall be carried out between each prescribed test.

(ii) During each test, no part of the ROPS shall enter the critical zone as detailed in SAE J397 (1969). Deformation of the ROPS shall not allow the plane of the ground to enter this zone.

(b) Specific performance requirements.

(i) The energy requirement for purposes of meeting the requirements of subsection (6)(a) of this section is to be determined by referring to the plot of the energy versus weight of vehicle (see Figure V-6 for rubber-tired self-propelled scrapers; Figure V-7 for rubber-tired front-end loaders and rubber-tired dozers; Figure V-8 for crawler tractors and crawler-type loaders; and Figure V-9 for motor graders. For purposes of this section, force and weight are measured as pounds; energy (U) is measured as inch-pounds).

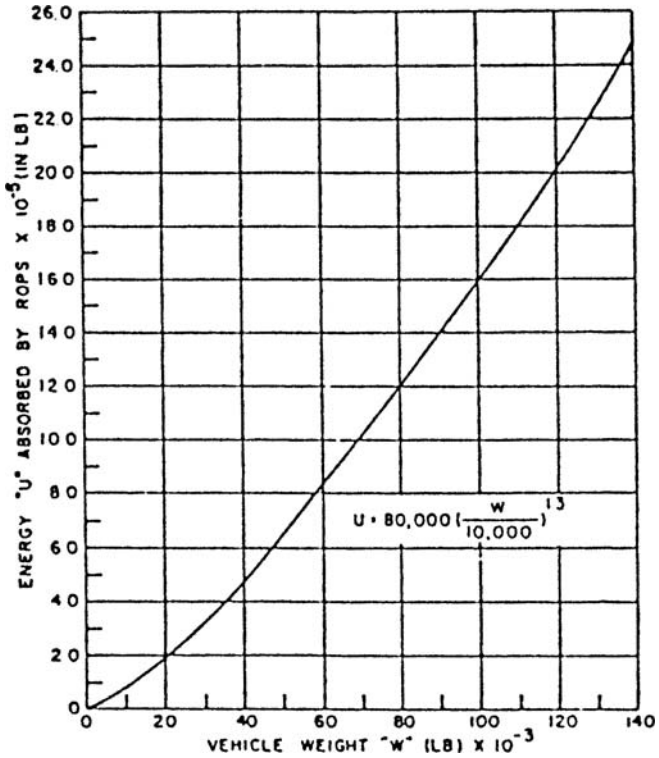

FIGURE V-6
Energy absorbed versus vehicle weight.

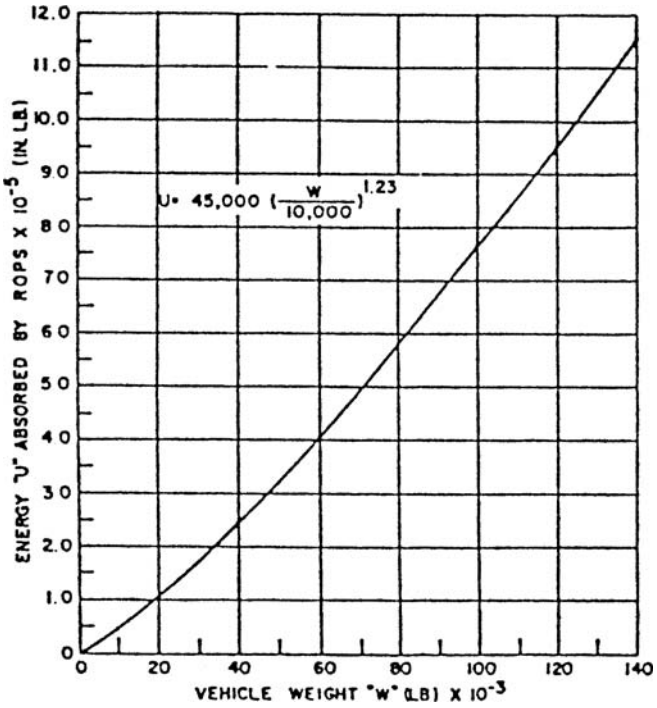

FIGURE V-8
Energy absorbed versus vehicle weight.

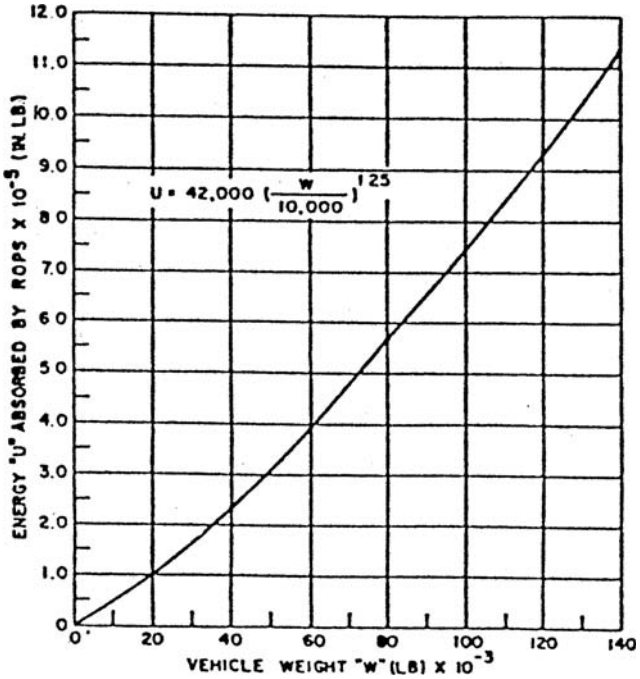

FIGURE V-7
Energy absorbed versus vehicle weight.

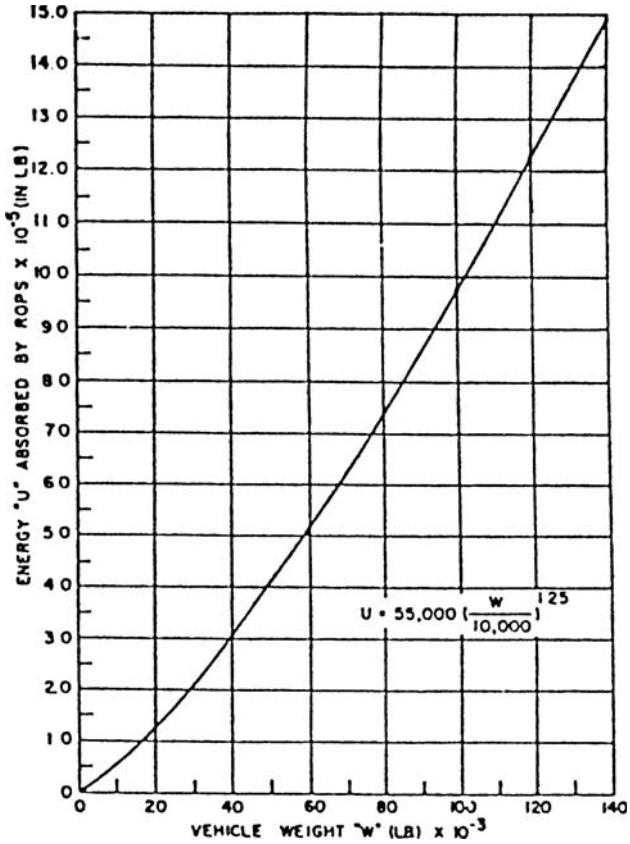

FIGURE V-9
Energy absorbed versus vehicle weight.

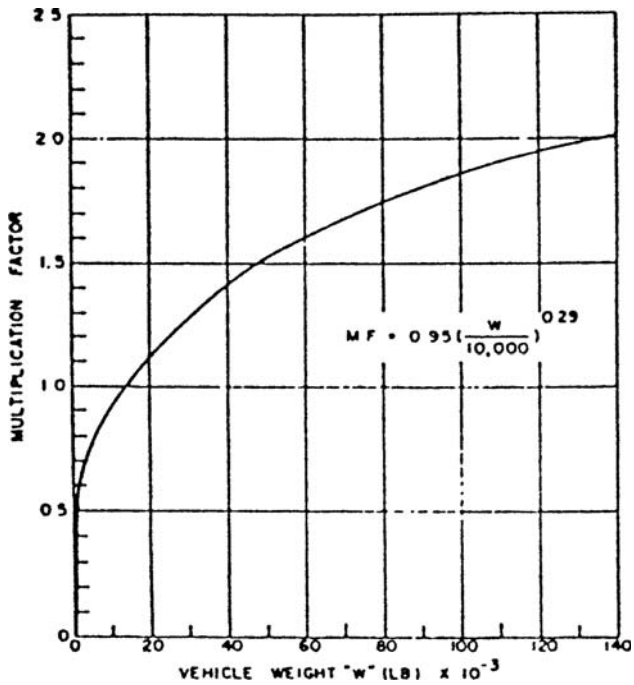

FIGURE V-10

Minimum horizontal load factor for self-propelled scrapers.

(ii) The applied load must attain at least a value which is determined by multiplying the vehicle weight by the corresponding factor shown in Figure V-10 for rubber-tired self-propelled scrapers; in Figure V-11 for rubber-tired front-end loaders and rubber-tired dozers; in Figure V-12 for crawler tractors and crawler-type loaders; and in Figure V-13 for motor graders.

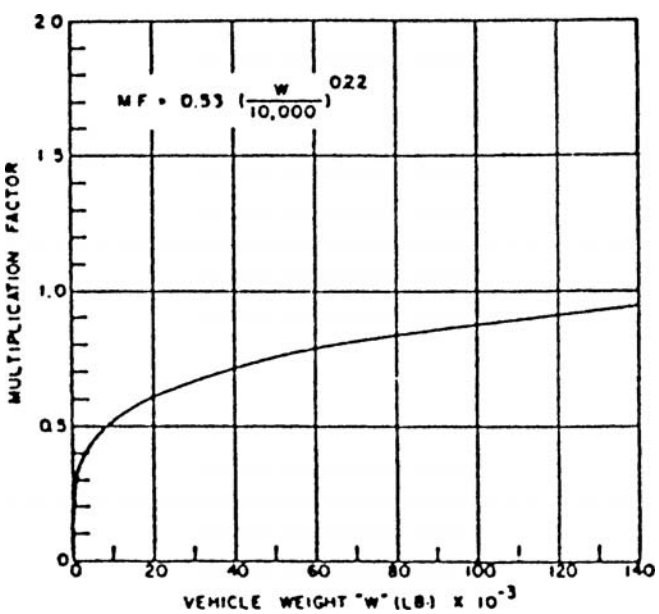

FIGURE V-11

Minimum horizontal load factor for rubber-tired loaders and dozers.

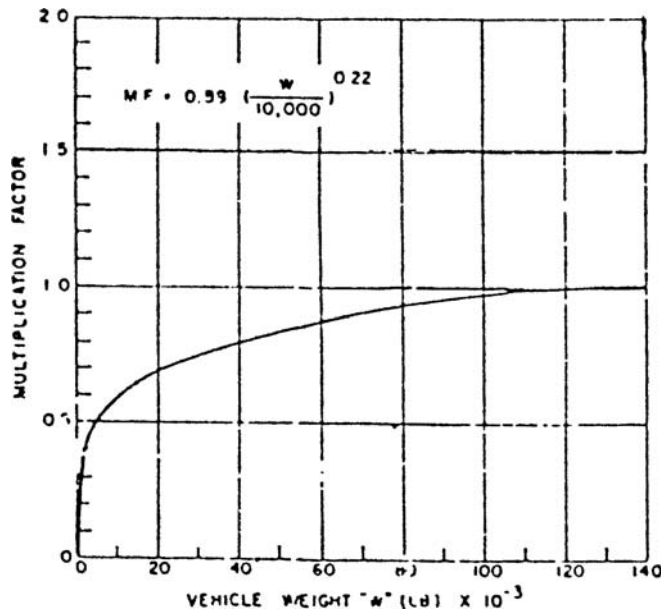

FIGURE V-12

Minimum horizontal load factor for crawler tractors and crawler-type loaders.

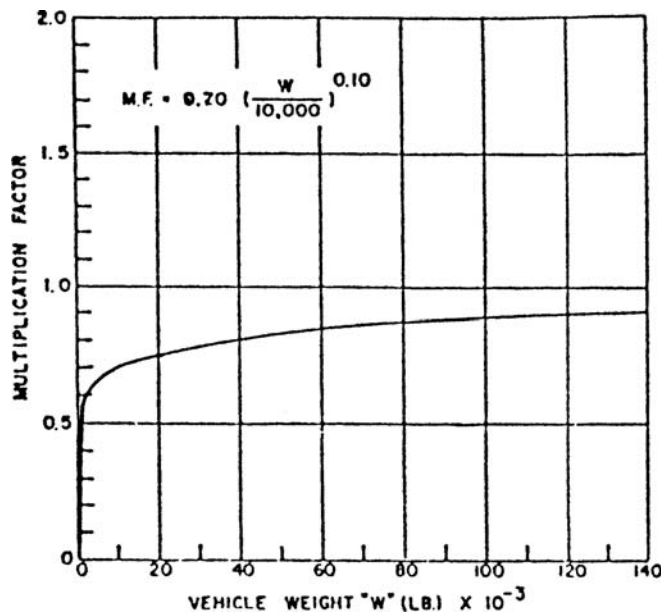

FIGURE V-13

Minimum horizontal load factor for motor graders.

(iv) Material used in the ROPS must have the capability of performing at zero degrees Fahrenheit, or exhibit Charpy V notch impact strength of 8 foot-pounds at minus 20° Fahrenheit. This is a standard Charpy specimen as described in American Society of Testing and Materials A 370, Methods and Definitions for Mechanical Testing of Steel Products. The purpose of this requirement is to reduce the tendency of brittle fracture associated with dynamic loading, low temperature operation, and stress raisers which cannot be entirely avoided on welded structures.

(8) Source of standard. This standard is derived from, and restates, the following Society of Automotive Engineers Recommended Practices: SAE J320a, Minimum Performance Criteria for Roll-Over Protective Structure for Rubber-Tired, Self-Propelled Scrapers; SAE J394, Minimum Performance Criteria for Roll-Over Protective Structure for Rubber-Tired Front-End Loaders and Rubber-Tired Dozers; SAE J395, Minimum Performance Criteria for Roll-Over Protective Structure for Crawler Tractors and Crawler-Type Loaders; and SAE J396, Minimum Performance Criteria for Roll-Over Protective Structure for Motor Graders. These recommended practices shall be resorted to in the event that questions of interpretation arise. The recommended practices appear in the 1971 SAE Handbook, which may be examined in each of the district offices of the department of labor and industries.

[Statutory Authority: Chapter 49.17 RCW. WSR 94-15-096 (Order 94-07), § 296-155-955, filed 7/20/94, effective 9/20/94; Order 74-26, § 296-155-955, filed 5/7/74, effective 6/6/74.]

WAC 296-155-960 Protective frame (ROPS) test procedures and performance requirements for wheel-type agricultural and industrial tractors used in construction. (1) Definitions applicable to this section.

(a) SAE J333a, Operator Protection for Wheel-Type Agricultural and Industrial Tractors (July 1970) defines "agricultural tractor" as a "wheel-type vehicle of more than 20 engine horsepower designed to furnish the power to pull, carry, propel, or drive implements that are designed for agricultural usage." Since this chapter applies only to construction work, the following definition of "agricultural tractor" is adopted for purposes of this part: "Agricultural tractor" means a wheel-type vehicle of more than 20 engine horsepower, used in construction work, which is designed to furnish the power to pull, propel, or drive implements.

(b) "Industrial tractor" means that class of wheeled type tractor of more than 20 engine horsepower (other than rubber-tired loaders and dozers described in WAC 296-155-955), used in operations such as landscaping, construction services, loading, digging, grounds keeping, and highway maintenance.

(c) The following symbols, terms, and explanations apply to this section:

E_{is} = Energy input to be absorbed during side loading. E_{is} = 723 + 0.4 W ft.-lb. (E'_{is} = 100 + 0.12 W', m.- kg).

E_{ir} = Energy input to be absorbed during rear loading. E_{ir} = 0.47 W ft.- lb. (E'_{ir} = 0.14 W', m.- kg).

W = Tractor weight as prescribed in WAC 296-155-960 (5)(a) and (5)(c) in lb. (W', kg).

L = Static load, lb. (kg.).

D = Deflection under L, in. (mm.).

L-D = Static load-deflection diagram.

L_m-D_m = Modified static load-deflection diagram (Figure V-20). To account for increase in strength due to increase in strain rate, raise L in plastic range to L x K.

K = Increase in yield strength induced by higher rate of loading (1.3 for hot rolled low carbon steel 1010-1030). Low carbon is preferable; however, if higher carbon or other material is used, K must be determined in the laboratory. Refer to Charles H. Norris, et al., Structural Design for Dynamic Loads (1959), p. 3.

L_{max} = Maximum observed static load.

Load limit = Point on L-D curve where observed static load is 0.8 L_{max} (refer to Figure V-19).

E_u = Strain energy absorbed by the frame, ft.-lb. (m. - kg) area under L_m-D_m curve.

FER = Factor of energy ratio, FER = E_u/E_{is}; also = E_u/E_{ir}.

P_b = Maximum observed force in mounting connection under static load, L, lb. (kg.).

FSB = Design margin for mounting connection FSB = (P_u/P_b)-1.

H = Vertical height of lift of 4,410 lb. (2,000 kg.) weight, in. (H', mm.). The weight shall be pulled back so that the height of its center of gravity above the point of impact is defined as follows: H = 4.92 + 0.00190 W or (H' = 125 = 0.107 W') (Figure V-14).

[

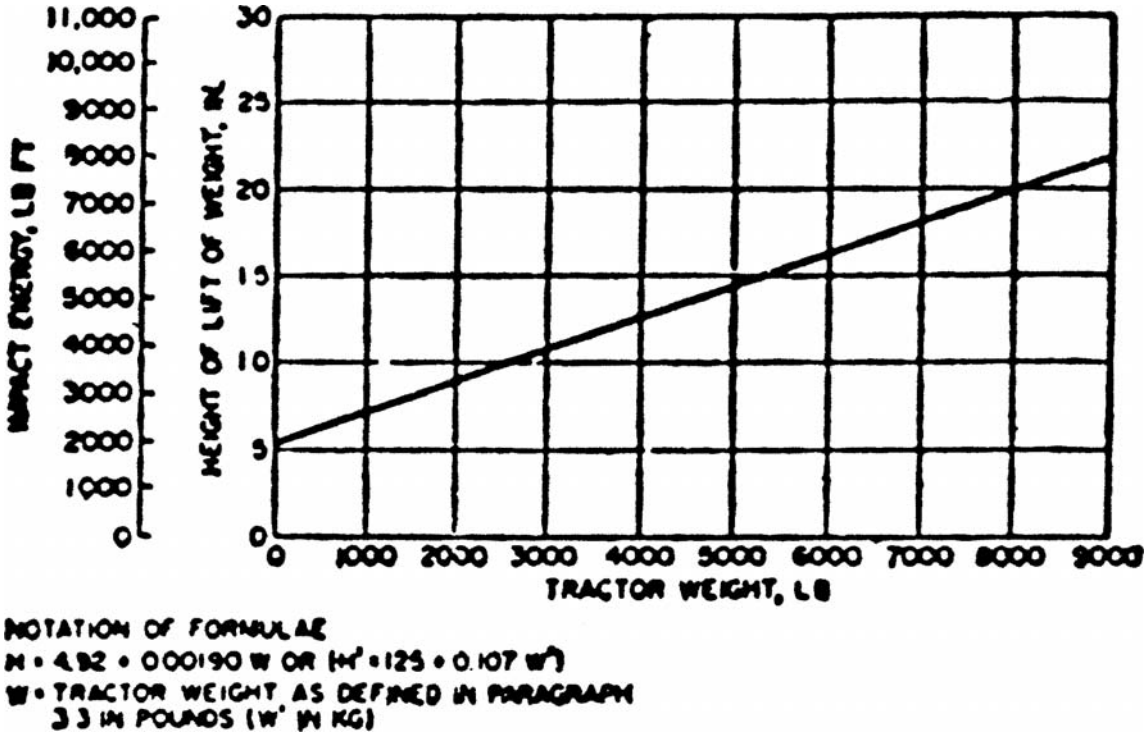

]

[

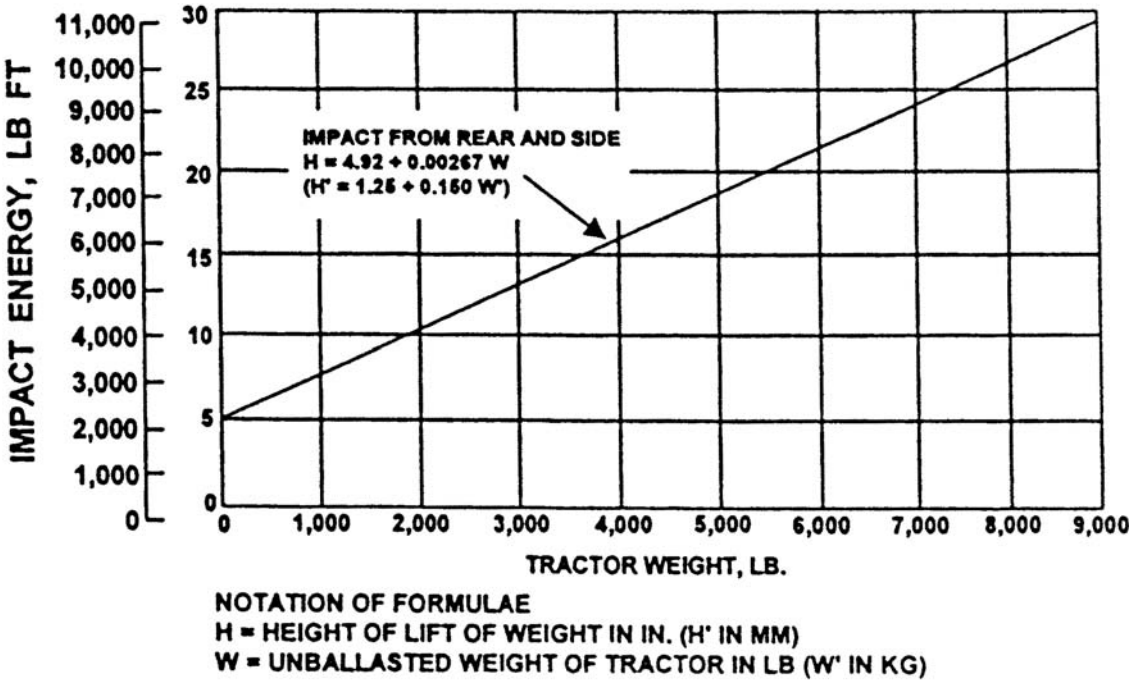

]

FIGURE V-14

Impact energy and corresponding lift height of 4,410 lb. (2,000 kg.) weight.

(d) Source of standard. The standard in this section is derived from, and restates, Society of Automotive Engineers Standard J334a (July 1970), Protective Frame Test Procedures and Performance Requirements. This standard must be used in the event that questions of interpretation arise. The standard appears in the 1971 SAE Handbook.

(2) General.

(a) The purpose of this section is to set forth requirements for frames for the protection of operators of wheel type agricultural and industrial tractors to minimize the possibility of operator injury resulting from accidental upsets during normal operation. With respect to agricultural and industrial tractors, the provisions of WAC 296-155-955 and 296-155-965 for rubber-tired dozers and rubber-tired loaders may be utilized in lieu of the requirements of this section.

(b) The protective frame which is the subject of this standard is a structure mounted to the tractor that extends above the operator's seat and conforms generally to Figure V-15.

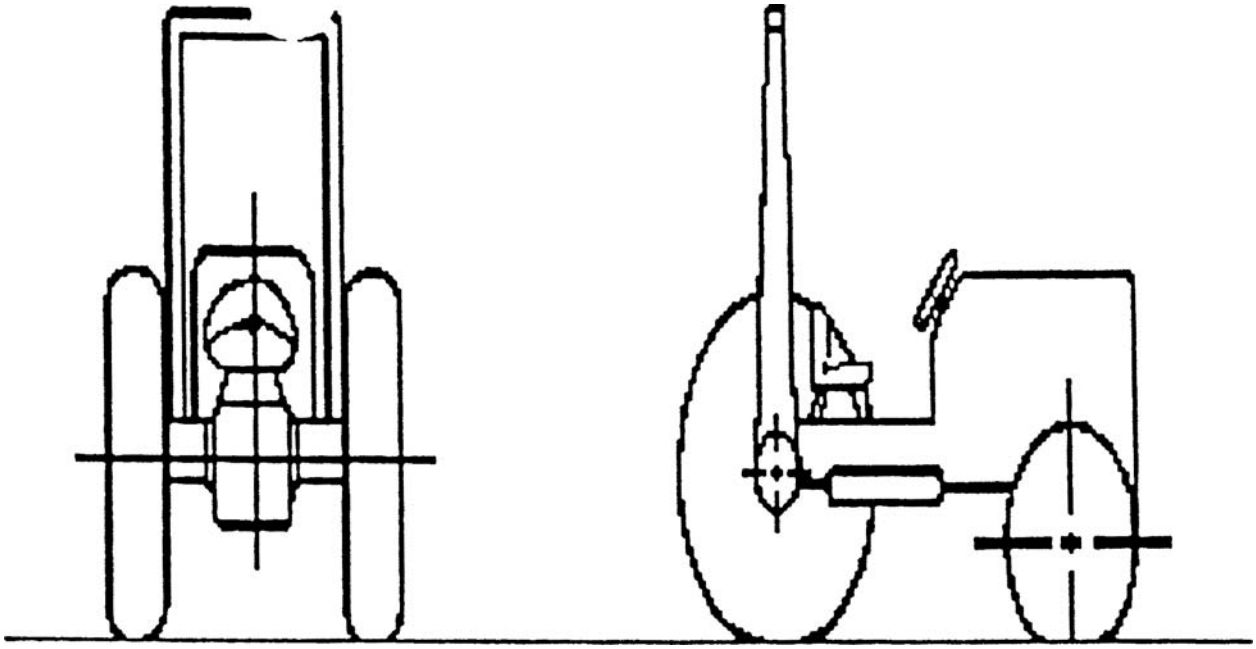

FIGURE V-15
Typical frame configuration.

(c) If an overhead weather shield is attached to the protective frame, it may be in place during tests: Provided, That it does not contribute to the strength of the protective frame. If such an overhead weather shield is attached, it must meet the requirements of subsection (10) of this section.

(d) For overhead protection requirements, see WAC 296-155-965.

(e) If protective enclosures are used on wheel-type agricultural and industrial tractors, they shall meet the requirements of Society of Automotive Engineers Standard J168 (July 1970), Protective Enclosures, Test Procedures, and performance requirements.

(3) Applicability. The requirements of this section apply to wheel-type agricultural tractors use in construction work and to wheel-type industrial tractors used in construction work. See subsection (1) of this section for definitions of agricultural tractors and industrial tractors.

(4) Performance requirements.

(a) Either a laboratory test or a field test is required in order to determine the performance requirements set forth in subsection (10) of this section.

(b) A laboratory test may be either static or dynamic. The laboratory test must be under conditions of repeatable and controlled loading in order to permit analysis of the protective frame.

(c) A field upset test, if used, shall be conducted under reasonably controlled conditions, both rearward and sideways, to verify the effectiveness of the protective frame under actual dynamic conditions.

(5) Test procedure—General.

(a) The tractor used shall be the tractor with the greatest weight on which the protective frame is to be used.

(b) A new protective frame and mounting connections of the same design shall be used for each test procedure.

(c) Instantaneous and permanent frame deformation shall be measured and recorded for each segment of the test.

(d) Dimensions relative to the seat shall be determined with the seat unloaded and adjusted to its highest and most rearward latched position provided for a seated operator.

(e) If the seat is offset, the frame loading shall be on the side with the least space between the centerline of the seat and the upright.

(f) The low temperature impact strength of the material used in the protective structure shall be verified by suitable material tests or material certifications in accordance with WAC 296-155-955 (7)(b)(iv).

(6) Test procedure for vehicle overturn.

(a) Vehicle weight. The weight of the tractor, for purposes of this section, includes the protective frame, all fuels, and other components required for normal use of the tractor.

Ballast must be added if necessary to achieve a minimum total weight of 130 lb. (59 kg.) per maximum power takeoff horsepower at rated engine speed. The weight of the front end must be at least 33 lb. (15 kg.) per maximum power takeoff horsepower. In case power takeoff horsepower is unavailable, 95 percent of net engine flywheel horsepower shall be used.

(b) Agricultural tractors shall be tested at the weight set forth in subdivision (a) of this subsection.

(c) Industrial tractors shall be tested with items of integral or mounted equipment and ballast that are sold as standard equipment or approved by the vehicle manufacturer for use with the vehicle where the protective frame is expected to provide protection for the operator with such equipment installed. The total vehicle weight and front end weight as tested shall not be less than the weights established in subdivision (a) of this subsection.

(d) The test shall be conducted on a dry, firm soil bank as illustrated in Figure V-16. The soil in the impact area shall have an average cone index in the 0.6 in. (153 mm.) layer not less than 150 according to American Society of Agricultural Engineers Recommendations ASAE R313, Soil Cone Penetrometer. The path of travel of the vehicle shall be 12° ± 2° to the top edge of the bank.

(e) The upper edge of the bank shall be equipped with an 18 in. (457 mm.) high ramp as described in Figure V-16 to assist in tipping the vehicle.

(f) The front and rear wheel tread settings, where adjustable, shall be at the position nearest to halfway between the minimum and maximum settings obtainable on the vehicle. Where only two settings are obtainable, the minimum setting shall be used.

(g) Vehicle overturn test—Sideways and rearward.

(i) The tractor shall be driven under its own power along the specified path of travel at a minimum speed of 10 m.p.h. (16 km./hr.) or maximum vehicle speed if under 10 m.p.h. (16 km./hr.) up the ramp as described in subdivision (e) of this subsection to induce sideways overturn.

(ii) Rear upset shall be induced by engine power with the tractor operating in gear to obtain 3-5 m.p.h. (4.8-8 km./hr.) at maximum governed engine r.p.m. preferably by driving forward directly up a minimum slope of two vertical to one horizontal. The engine clutch may be used to aid in inducing the upset.

[

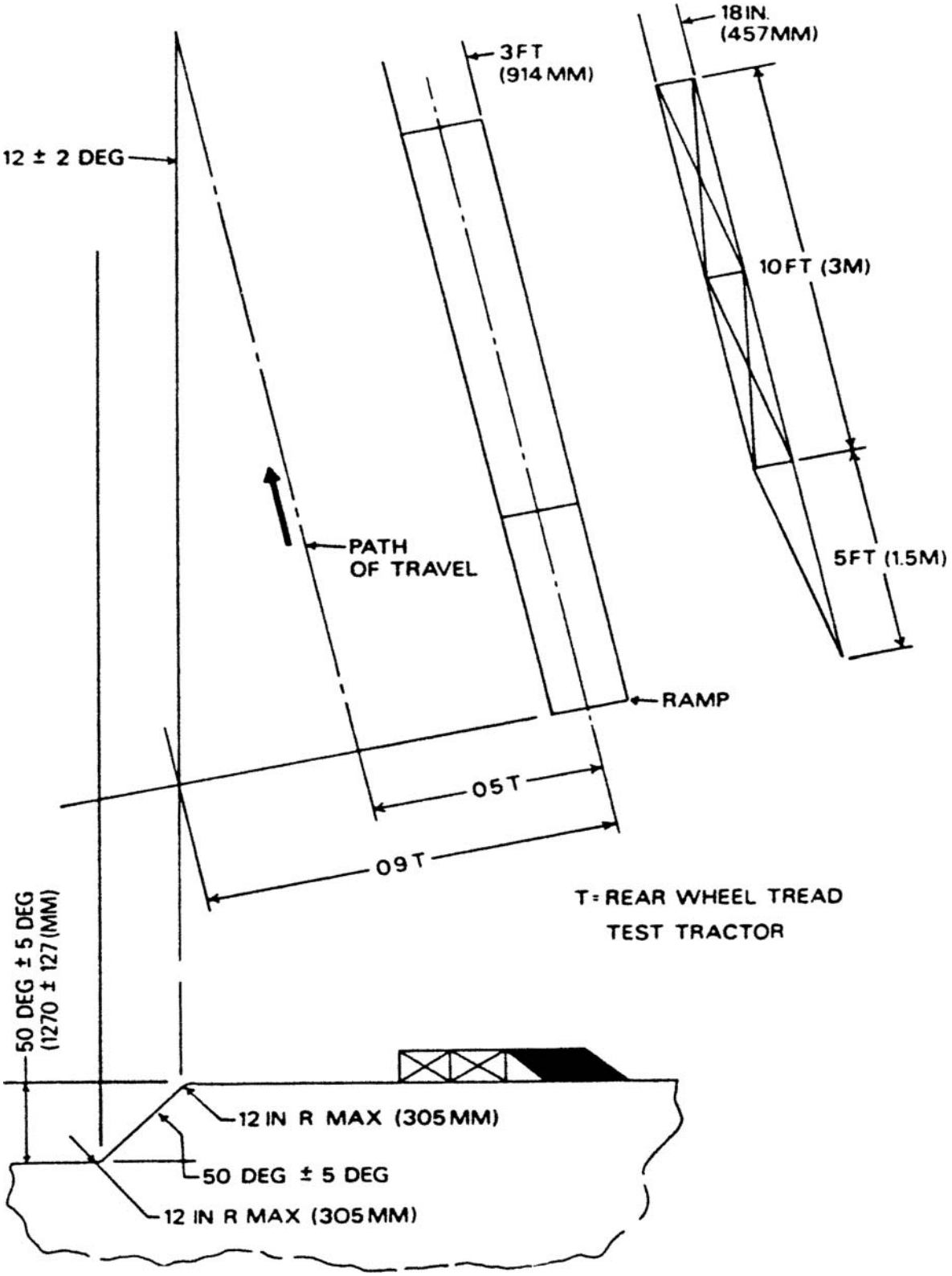
18 IN.
(457 MM)
3 FT
(914 MM)
12 ± 2 DEG
10 FT (3M)
PATH
OF TRAVEL
5 FT (1.5M)
RAMP
05 T
09 T
T = REAR WHEEL TREAD
TEST TRACTOR
50 DEG ± 5 DEG
(1270 ± 127 (MM)
12 IN R MAX (305 MM)
50 DEG ± 5 DEG
12 IN R MAX (305 MM)

]

[

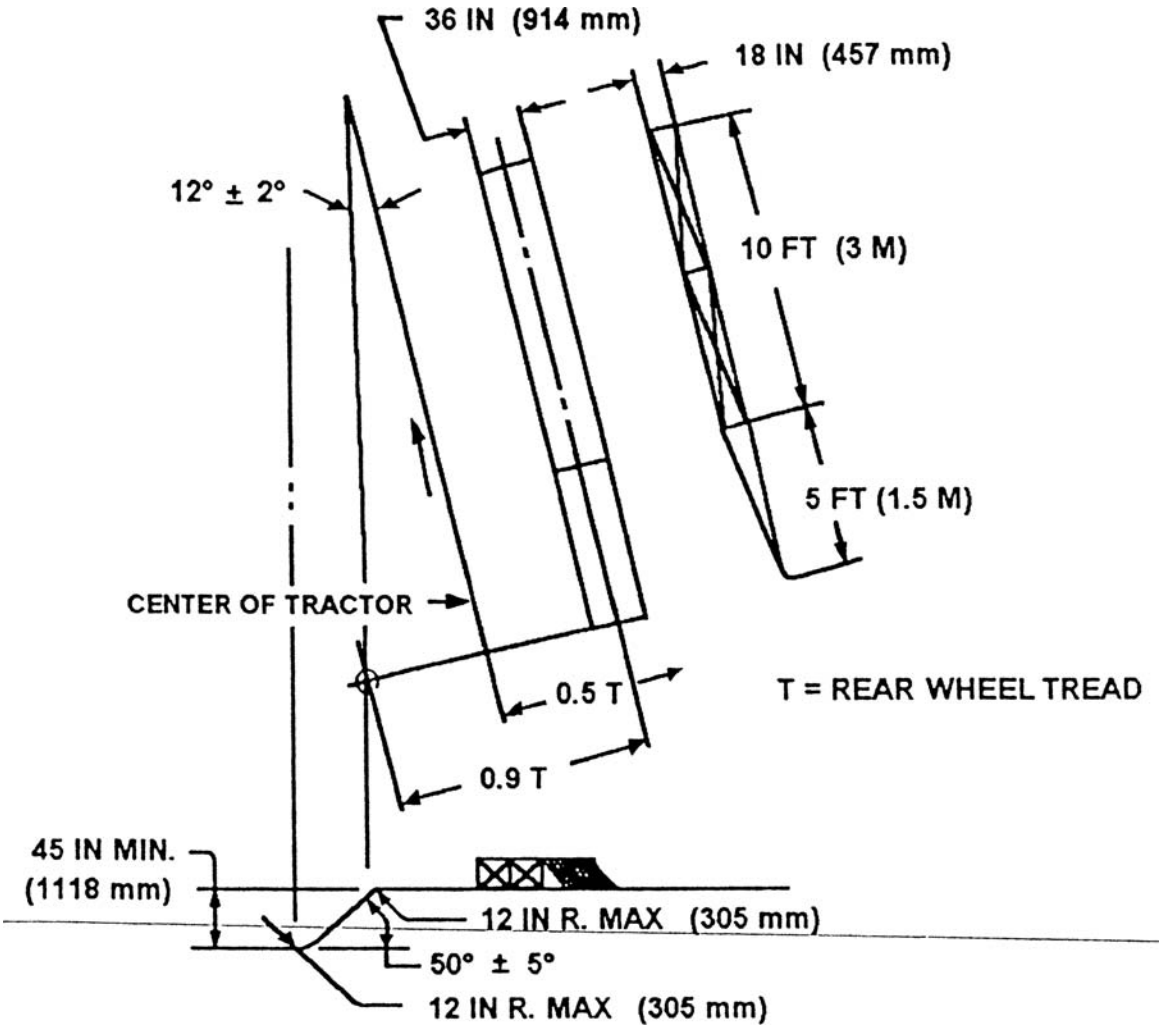

]

FIGURE V-16

(7) Other test procedures. When the field upset test is not used to determine ROPS performance, either the static test or the dynamic test, contained in subsection (8) or (9) of this section, shall be made.

(8) Static test.

(a) Test conditions.

(i) The laboratory mounting base shall include that part of the tractor chassis to which the protective frame is attached including the mounting parts.

(ii) The protective frame shall be instrumented with the necessary equipment to obtain the required load deflection data at the locations and directions specified in Figures V-17, V-18, and V-19.

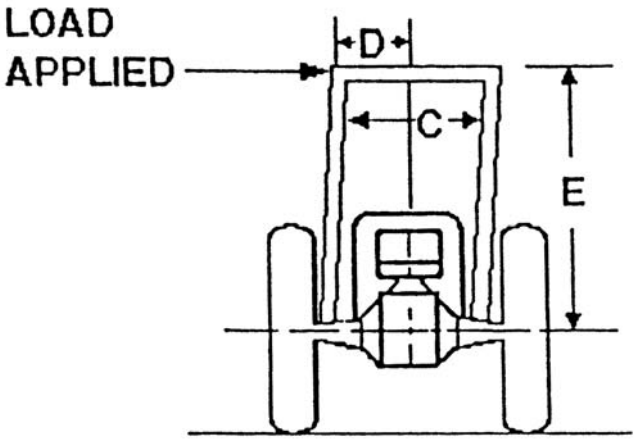

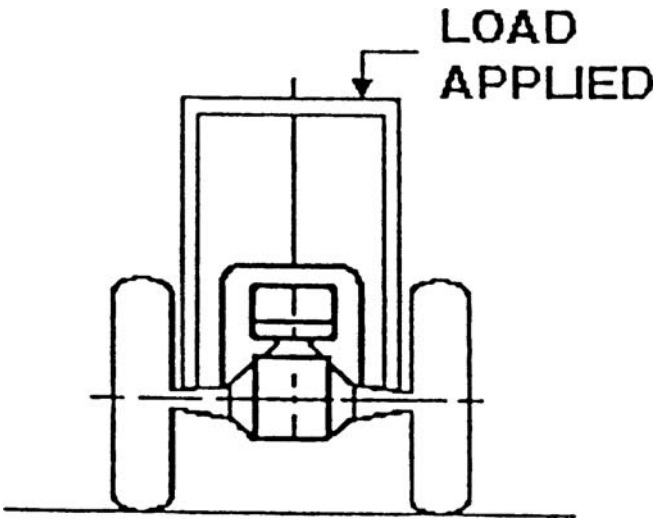

FIGURE V-17
Side load application.

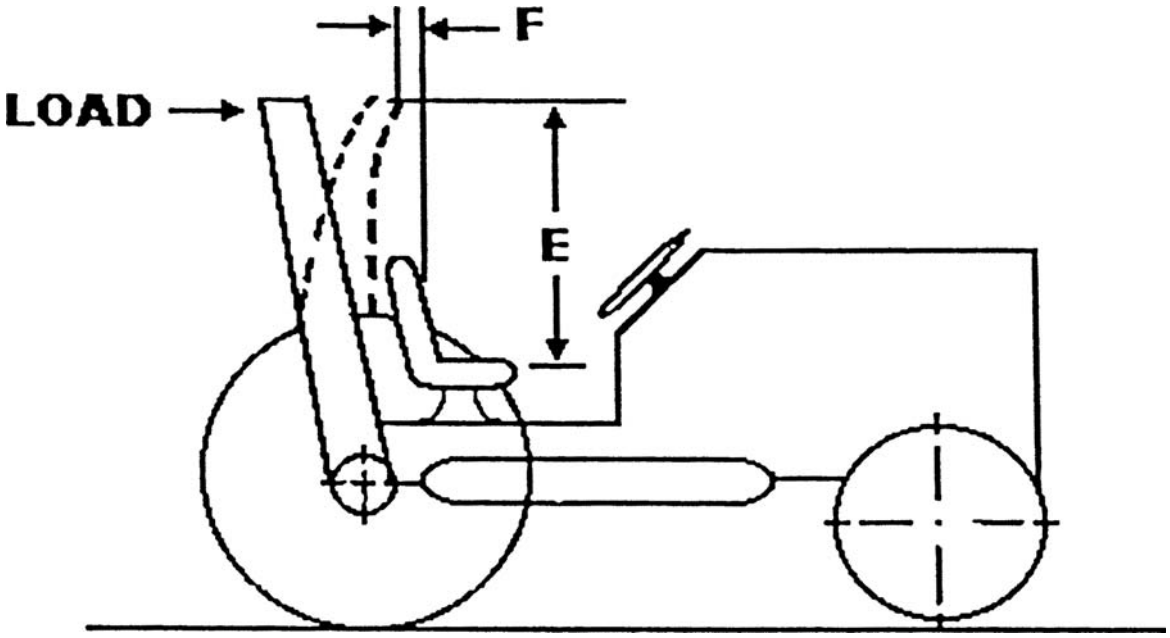

FIGURE V-18
Rear load application.

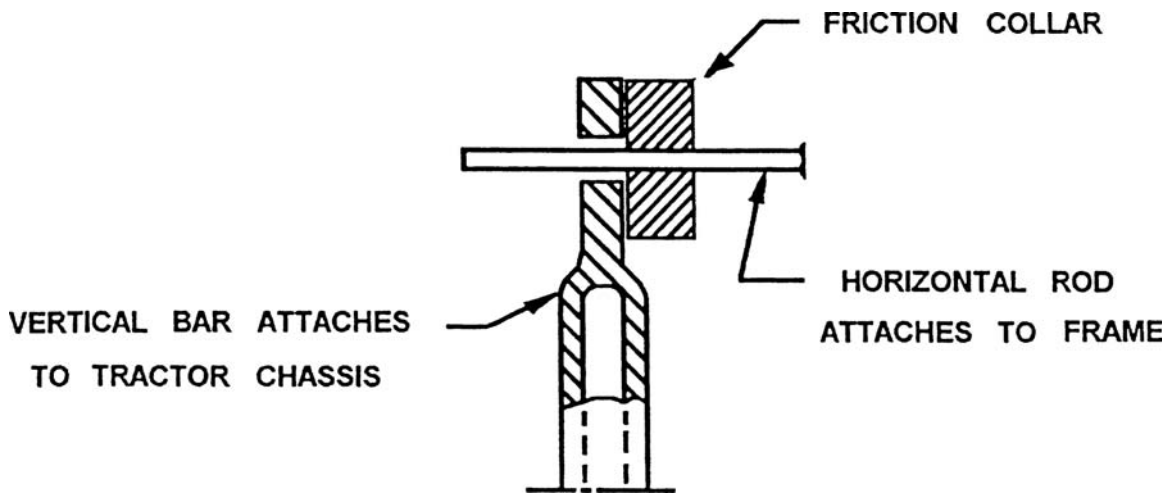

FIGURE V-19
Method of measuring instantaneous deflection.

(iii) The protective frame and mounting connections shall be instrumented with the necessary recording equipment to obtain the required load-deflection data to be used in calculating FSB (see subsection (1)(c) of this section). The gauges shall be placed on mounting connections before the installation load is applied.

(b) Test procedure.

(i) The side load application shall be at the upper extremity of the frame upright at a 90° angle to the centerline of the vehicle. The side load "L" shall be applied according to Figure V-17. "L" and "D" shall be recorded simultaneously. The test shall be stopped when:

(a) The strain energy absorbed by the frame is equal to the required input energy (E_{is}) or

(b) Deflection of the frame exceeds the allowable deflection, or

(c) The frame load limit occurs before the allowable deflection is reached in the side load.

(ii) The L-D diagram, as shown by means of a typical example in Figure V-20, shall be constructed, using the data obtained in accordance with item (i) of this subdivision.

(iii) The modified L_m-D_m diagram shall be constructed according to item (ii) of this subdivision and according to Figure V-21. The strain energy absorbed by the frame(E_u) shall than be determined.

(iv) E_{is}, FER and FSB shall be calculated.

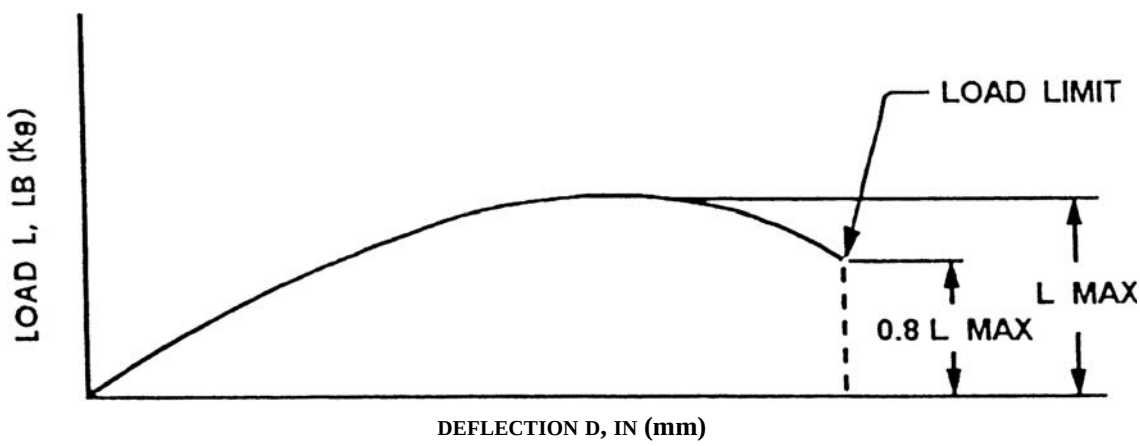

FIGURE V-20
Typical L-D diagram.

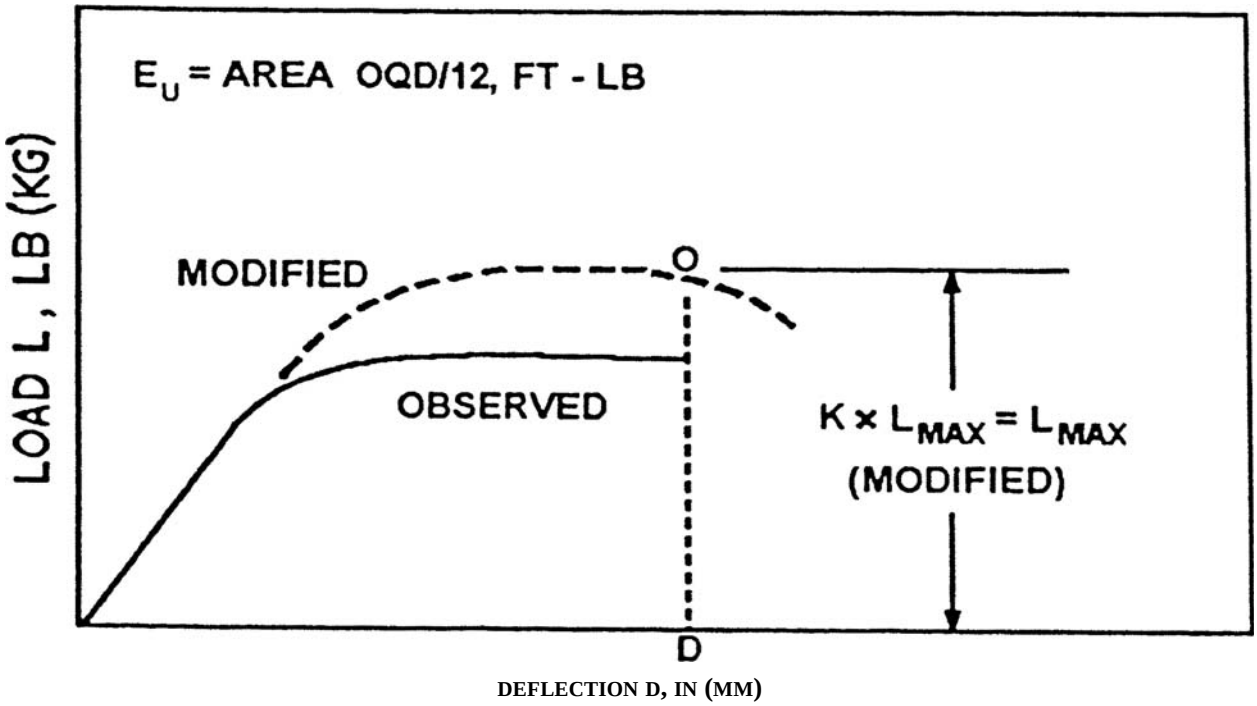

FIGURE V-21
Typical modified L_m-D_m diagram.

(v) The test procedure shall be repeated on the same frame utilizing L (rear input; see Figure V-19) and E_{ir}. Rear load application shall be uniformly distributed along a maximum projected dimension of 27 in. (686 mm.) and a maximum area of 160 sq. in. (1,032 sq. cm.) normal to the direction of load application. The load shall be applied to the upper extremity of the frame at the point which is midway between the centerline of the seat and the inside of the frame upright.

(9) Dynamic test.

(a) Test conditions.

(i) The protective frame and tractor shall meet the requirements of subsection (6)(b) or (c) of this section, as appropriate.

(ii) The dynamic loading shall be produced by use of a 4,410 lb. (2,000 kg.) weight acting as a pendulum. The impact face of the weight shall be 27 plus or minus 1 in. by 27 plus or minus 1 in. (686 + or - 25 mm.) and shall be constructed so that its center of gravity is within 1 in. (25.4 mm.) of its geometric center. The weight shall be suspended from a pivot point 18-22 ft. (5.5-6.7 m.) above the point of impact on the frame and shall be conveniently and safely adjustable for height. (See Figure V-22.)

[

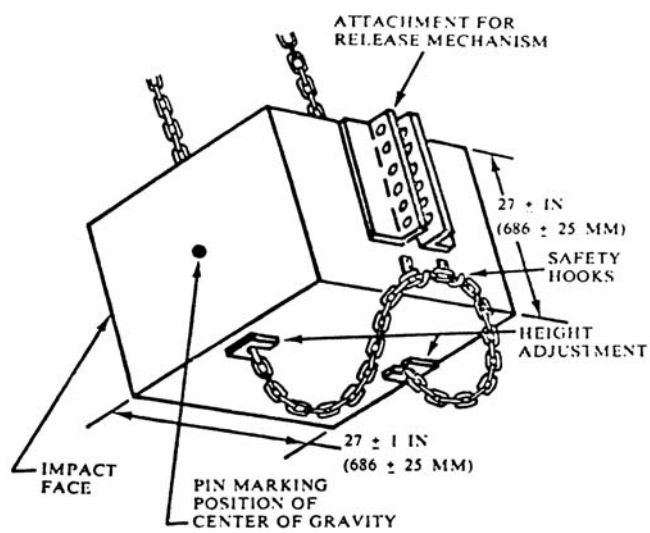

]

[

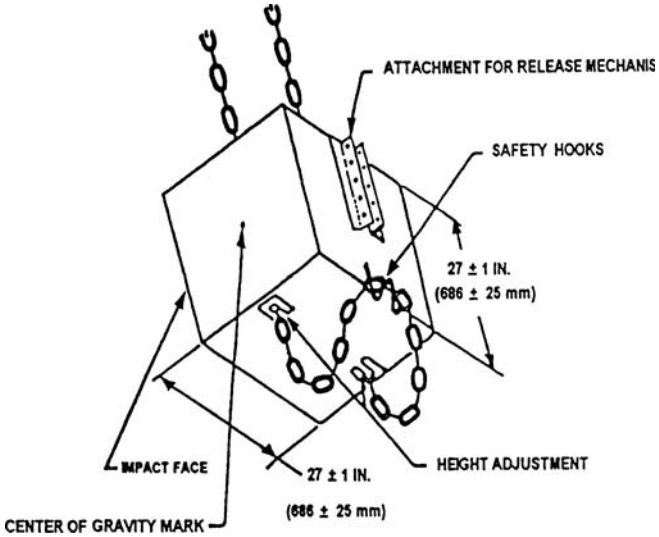

]

FIGURE V-22
Pendulum.

(iii) For each phase of testing, the tractor shall be restrained from moving when the dynamic load is applied. The restraining members shall be of 0.5-0.63 in. (12.5-16 mm.) steel cable and points of attaching restraining members shall be located an appropriate distance behind the rear axle and in front of the front axle to provide a 15°-30° angle between a restraining cable and the horizontal. The restraining member shall either be in the plane in which the center gravity of the pendulum will swing or more than one restraining cable shall give a resultant force in this plane. (See Figure V-23.)

[

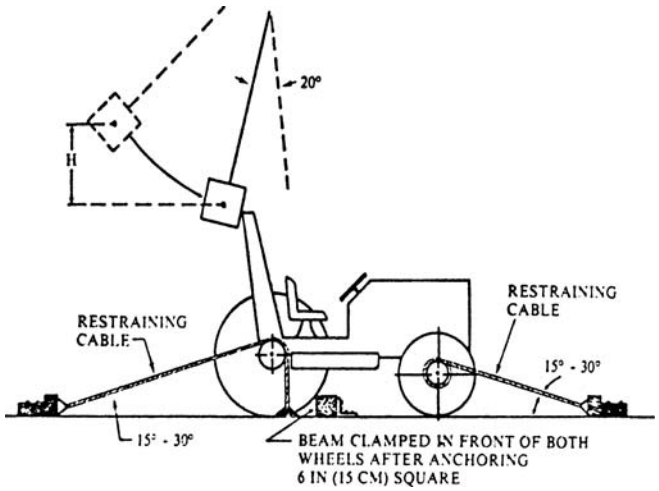

]

[

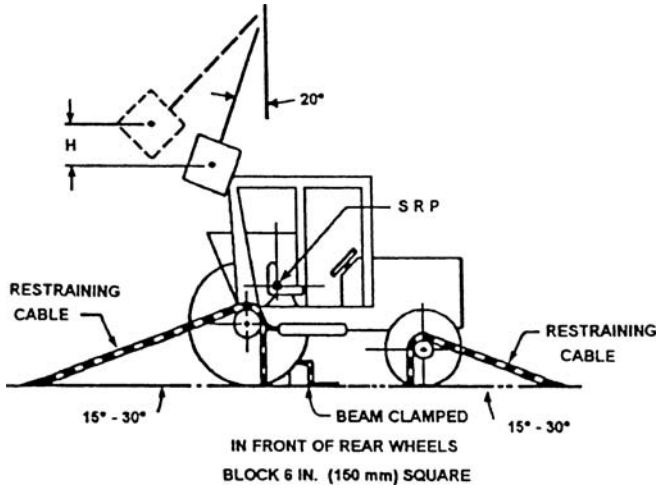

]

FIGURE V-23
Method of impact from rear.

(iv) The wheel tread setting shall comply with the requirements of subsection (6)(f) of this section. The tires shall have no liquid ballast and shall be inflated to the maximum operating pressure recommended by the tire manufacturer. With specified tire inflation, the restraining cables shall be tightened to provide tire deflection of 6-8 percent of nominal tire section width. After the vehicle is properly restrained, a wooden beam 6 x 6 in. (15 x 15 cm.) shall be driven tightly against the appropriate wheels and clamped. For the test to the side, an additional wooden beam shall be placed as a prop against the wheel nearest the operator's station and shall be secured to the floor so that it is held tightly against the wheel rim during impact. The length of this beam shall be chosen so that when it is positioned against the wheel rim it is at an angle of 25°-40° to the horizontal. It shall have a length 20-25 times its depth and a width two to three times its depth. (See Figures V-23 and V-24.)

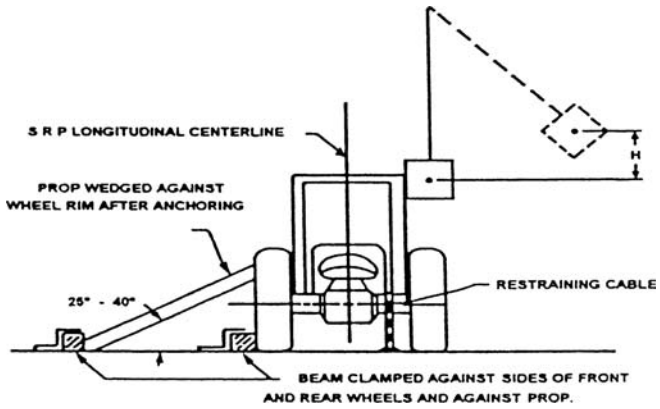

FIGURE V-24
Method of impact from side.

(v) Means shall be provided indicating the maximum instantaneous deflection along the line of impact. A simple friction device is illustrated in Figure V-24.

(vi) No repair or adjustments may be carried out during the test.

(vii) If any cables, props, or blocking shift or break during the test, the test shall be repeated.

(b) Test procedure.

(i) General. The frame shall be evaluated by imposing dynamic loading to rear followed by a load to the side on the same frame. The pendulum dropped from the height (see definition "H" in subsection (1)(c) of this section) imposes the dynamic load. The position of the pendulum shall be so selected that the initial point of impact on the frame shall be in line with the arc of travel of the center of gravity of the pendulum. A quick release mechanism should be used but, if used, shall not influence the attitude of the block.

(ii) Impact at rear. The tractor shall be properly restrained according to subdivisions (a)(iii) and (iv) of this section. The tractor shall be positioned with respect to the pivot point of the pendulum such that the pendulum is 20° from the vertical prior to impact, as shown in Figure V-23. The impact shall be applied to the upper extremity of the frame at the point which is midway between the centerline of the seat and the inside of the frame upright of a new frame.

(iii) Impact at side. The block and restraining shall conform to subdivisions (a)(iii) and (iv) of this subsection. The point of impact shall be that structural member of the protective frame likely to hit the ground first in a sideways accidental upset. The side impact shall be applied to the side opposite that used for rear impact.

(10) Performance requirements.

(a) General.

(i) The frame, overhead weather shield, fenders, or other parts in the operator area may be deformed but shall not shatter or leave sharp edges exposed to the operator, or violate dimensions as shown in Figures V-17 and V-18 as follows:

D = 2 in. (51 mm.) inside of frame upright to vertical centerline of seat.

E = 30 in. (762 mm.).

F = Not less than 0 in. and not more than 12 in. (305 mm.), measured at centerline front of seat backrest to crossbar along the line of load application as shown in Figure V-17.

G = 24 in. (610 mm.).

(ii) The material and design combination used in the protective structure must be such that the structure can meet all prescribed performance tests at zero degrees Fahrenheit in accordance with WAC 296-155-955 (7)(b)(iv).

(b) Vehicle overturn performance requirements. The requirements of this subsection (10) must be met in both side and rear overturns.

(c) Static test performance requirements. Design factors shall be incorporated in each design to withstand an overturn test as prescribed in this subsection (10). The structural requirements will be generally met if FER is greater than 1 and FSB is greater than K-1 in both side and rear loadings.

(d) Dynamic test performance requirements. Design factors shall be incorporated in each design to withstand the overturn test prescribed in this subsection (10). The structural requirements will be generally met if the dimensions in this subsection (10) are adhered to in both side and rear loads.

[Statutory Authority: RCW 49.17.010, [49.17].040, [49.17].050. WSR 02-12-098, § 296-155-960, filed 6/5/02, effective 8/1/02; Order 74-26, § 296-155-960, filed 5/7/74, effective 6/6/74.]

Reviser's note: RCW 34.05.395 requires the use of underlining and deletion marks to indicate amendments to existing rules, and deems ineffectual changes not filed by the agency in this manner. The bracketed material in the above section does not appear to conform to the statutory requirement.

WAC 296-155-965 Overhead protection for operators of agricultural and industrial tractors. (1) General.

(a) Purpose. When overhead protection is provided on wheel-type agricultural and industrial tractors, the overhead protection shall be designed and installed according to the requirements contained in this section. The provisions of WAC 296-155-955 for rubber-tired dozers and rubber-tired loaders may be used in lieu of the standards contained in this section. The purpose of the standard is to minimize the possibility of operator injury resulting from overhead hazards such as flying and falling objects, and at the same time to minimize the possibility of operator injury from the cover itself in the event of accidental upset.

(b) Applicability. This section applies to wheel-type agricultural tractors used in construction work and to wheel-type industrial tractors used in construction work. See WAC 296-155-960 (1) and (3). In the case of machines to which WAC 296-155-625 (relating to site clearing) also applies, the overhead protection may be either the type of protection provided in WAC 296-155-625 or the type of protection provided by this section.

(2) Overhead protection. When overhead protection is installed on wheel-type agricultural or industrial tractors used in construction work, it shall meet the requirements of this subsection. The overhead protection may be constructed of a solid material. If grid or mesh is used, the largest permissible opening shall be such that the maximum circle which can be inscribed between the elements of the grid or mesh is 1.5 in. (38 mm.) in diameter. The overhead protection shall not be installed in such a way as to become a hazard in the case of upset.

(3) Test procedures—General.

(a) The requirements of WAC 296-155-960 (5), (6) and (7) shall be met.

(b) Static and dynamic rear load application shall be uniformly distributed along a maximum projected dimension of 27 in. (686 mm.) and a maximum area of 160 in.^{2} (1,032 cm.^{2}) normal direction of load application. The load shall be applied to the upper extremity of the frame at the point which is midway between the centerline of the seat and the inside of the frame upright.

(c) The static and dynamic side load application shall be uniformly distributed along a maximum projected dimension of 27 in. (686 mm.) and a maximum area of 160 in.^{2} (1,032 cm.^{2}) normal to the direction of load application. The direction of load application is the same as in WAC 296-155-960 (8) and (9). To simulate the characteristics of the structure during an upset, the center of load application may be located

from a point 24 in. (610 mm.) (K) forward to 12 in. (305 mm.) (K) forward to 12 in. (305 mm.) (L) rearward of the front of the seat backrest to best utilize the structural strength. See Figure V-25.

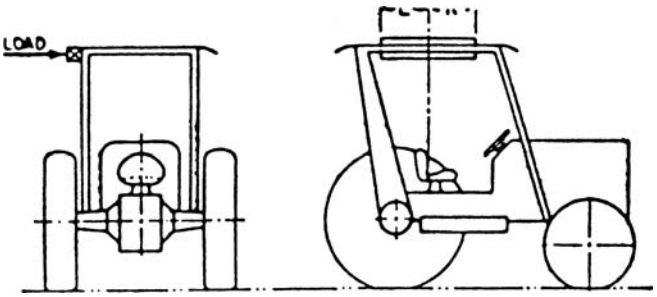

FIGURE V-25
Location for side load.

(4) Drop test procedures.

(a) The same frame shall be subjected to the drop test following either the static or dynamic test.

(b) A solid steel sphere or material of equivalent spherical dimension weighing 100 lb. (45.4 kg.) shall be dropped once from a height 10 ft. (3,048 mm.) above the overhead cover.

(c) The point of impact shall be on the overhead cover at a point within the zone of protection as shown in Figure V-26, which is furthest removed from major structural members.

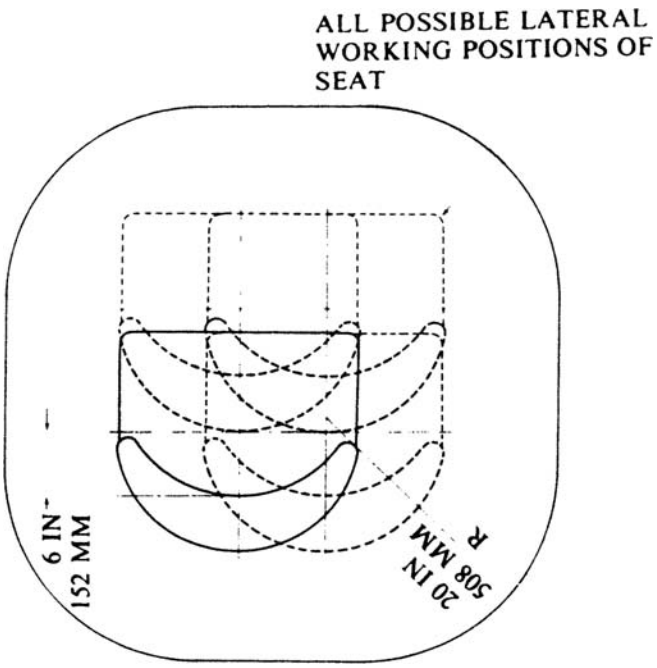

FIGURE V-26
Zone of protection for drop test.

(5) Crush test procedure.

(a) The same frame shall be subjected to the crush test following the drop test and static or dynamic test.

(b) The test load shall be applied as shown in Figure V-27 with the seat positioned as specified in WAC 296-155-960 (5)(d). Loading cylinders shall be pivotally mounted at both ends. Loads applied by each cylinder shall be equal within 2 percent, and the sum of the loads of the two cylinders shall be two times the tractor weight as set forth in WAC 296-155-960 (6)(a). The maximum width of the beam illustrated in Figure V-27 shall be 6 in. (152 mm.).

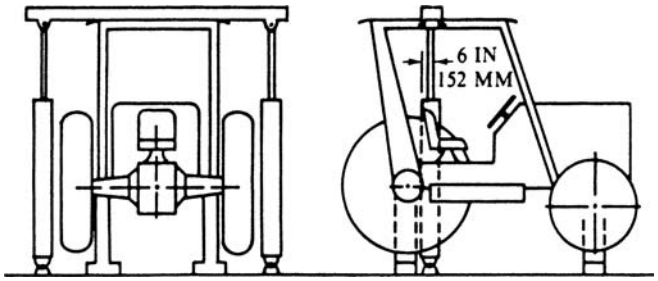

FIGURE V-27
Method of load application for crush test.

(6) Performance requirements.

(a) General. The performance requirements set forth in WAC 296-155-960 (10)(b), (c) and (d) shall be met.

(b) Drop test performance requirements.

(i) Instantaneous deformation due to impact of the sphere shall not enter the protected zone as illustrated in Figures V-25, V-26, and V-28.

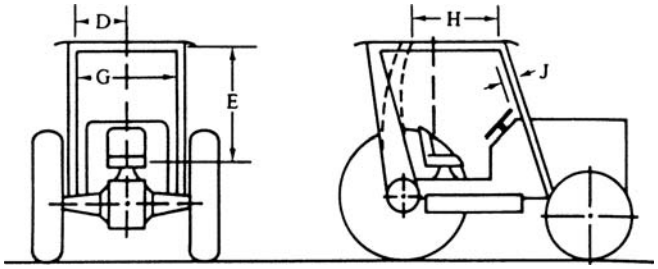

FIGURE V-28
Protected zone during crush and drop tests.

(ii) In addition to the dimensions set forth in WAC 296-155-960 (10)(a)(i) the following dimensions apply to Figure V-28:

H = 17.5 in. (444 mm.).

J = 2 in. (50.8 mm.) measured from the outer periphery of the steering wheel.

(c) Crush test performance requirements. The protected zone as described in Figure V-28 must not be violated.

(7) Source of standard. This standard is derived from, and restates, the portions of Society of Automotive Engineers Standard J167 which pertain to overhead protection requirements. The full title of the SAE standard is: Protective Frame with Overhead Protection—Test Procedures and performance requirements. The SAE standard shall be resorted to in the event that questions of interpretation arise. The SAE standard appears in the 1971 SAE Handbook.

[Order 74-26, § 296-155-965, filed 5/7/74, effective 6/6/74.]