Chapter 296-307 WAC
SAFETY STANDARDS FOR AGRICULTURE

WAC

FIELD OPERATIONS AND GENERAL REQUIREMENTS

Part A

General and Educational Requirements

296-307-003 How is this chapter divided?
296-307-006 What does this chapter cover?
296-307-009 What definitions apply to this chapter?
296-307-012 What does it mean when equipment is approved by a nonstate organization?
296-307-018 What are the employer's responsibilities?
296-307-021 What are the employee's responsibilities?
296-307-024 How does an employer apply for a variance?

Part B

Accident Prevention Program;

First-aid Requirements;

Safe Place Standard

296-307-030 What are the required elements of an accident prevention program?
296-307-033 How often must safety meetings be held?
296-307-036 What items go on the safety bulletin board?
296-307-039 First-aid rule summary.
296-307-03905 Make sure that first-aid trained personnel are available to provide quick and effective first aid.
296-307-03920 Make sure appropriate first-aid supplies are readily available.
296-307-03930 Make sure emergency washing facilities are functional and readily accessible.
296-307-03935 Inspect and activate your emergency washing facilities.
296-307-03940 Make sure supplemental flushing equipment provides sufficient water.
296-307-03945 Definitions.
296-307-045 What are the requirements of the safe place standard?

Part C

Hand Tools

296-307-050 What requirements apply to hand tools?

Part D

Ladders, Bulk Storage,

Pits, and Trenches

296-307-055 Ladders.
296-307-05501 How must ladders be cared for and maintained?
296-307-05503 How must an employer instruct employees to use ladders?
296-307-05505 How must orchard ladders be used?
296-307-05507 What other requirements apply to ladders?
296-307-060 What requirements apply to job-made ladders?
296-307-061 What requirements apply to working around bins, bunkers, hoppers, tanks, pits, and trenches?

Part E

Vehicles and Farm Field Equipment

296-307-065 How must slow-moving vehicles be marked?
296-307-070 Motor vehicles.
296-307-07001 How must motor vehicles be maintained?
296-307-07003 How must motor vehicles be operated?
296-307-07005 Who may operate motor vehicles?
296-307-07007 What requirements apply to motor vehicle brakes?
296-307-07009 How must motor vehicles be loaded and unloaded?
296-307-07011 What safety equipment must motor vehicles have?
296-307-07013 What rules apply to vehicles used to transport employees?
296-307-073 What requirements apply to changing and charging storage batteries?
296-307-076 How must farm field equipment be guarded?

Part F

Rollover Protective Structures (ROPS) for Tractors

296-307-080 Rollover protective structures (ROPS) for tractors.
296-307-08003 Which agricultural tractors are covered by this section?
296-307-08006 What definitions apply to rollover protective structures (ROPS) for agricultural tractors?
296-307-08009 What requirements apply to the testing and performance of ROPS used on agricultural tractors?
296-307-08012 What requirements apply to seatbelts used with ROPS on agricultural tractors?
296-307-08015 When are ROPS not required on agricultural tractors?
296-307-08018 What employee training requirements apply to ROPS used on agricultural tractors?
296-307-08021 What other requirements apply to ROPS used on agricultural tractors?
296-307-085 When must ROPS be provided for material handling equipment?
296-307-090 What requirements apply to overhead protection for operators of agricultural and industrial tractors?

Part G

Field Sanitation

296-307-095 Field sanitation.
296-307-09503 What does this section cover?
296-307-09506 What definitions apply to this section?
296-307-09509 What orientation must employers provide for field sanitation?
296-307-09512 What potable water sources must an employer provide?
296-307-09515 What handwashing facilities must an employer provide?
296-307-09518 What toilet facilities must an employer provide?

PART G-1

296-307-097 Outdoor heat exposure.
296-307-09710 Scope and purpose.
296-307-09720 Definitions.
296-307-09730 Employer and employee responsibility.
296-307-09740 Drinking water.
296-307-09750 Responding to signs and symptoms of heat-related illness.
296-307-09760 Information and training.

Part H

Personal Protective Equipment

296-307-100 Personal protective equipment.
296-307-10005 Who must provide personal protective equipment?
296-307-10010 What requirements apply to eye protection?
296-307-10015 How must personal protective equipment be used?
296-307-10020 What must an employer do to prevent heat-related illness?
296-307-10025 What instruction on personal protective equipment must an employer give to employees?

Part I

Pesticides

(Worker Protection Standard)

296-307-107 Federal worker protection standards—Washington state department of agriculture.
296-307-110 Scope and purpose—Worker protection standards—40 C.F.R., § 170.1.
296-307-11005 Definitions—Worker protection standards—40 C.F.R., § 170.3.
296-307-11010 General duties and prohibited actions—Worker protection standards—40 C.F.R., § 170.7.
296-307-11015 Violations of this part—Worker protection standards—40 C.F.R., § 170.9.

Standard for Workers

296-307-120 Applicability of this section—Standards for workers—40 C.F.R., § 170.102.

296-307-12005 Exceptions—Standards for workers—40 C.F.R., § 170.103.
296-307-12010 Exemptions—Standards for workers—40 C.F.R., § 170.104.
296-307-12015 Restrictions associated with pesticide applications—Standards for workers—40 C.F.R., § 170.110.
296-307-12020 Entry restrictions—Standards for workers—40 C.F.R., § 170.112.
296-307-12025 Notice of applications—Standards for workers—40 C.F.R., § 170.120.
296-307-12030 Providing specific information about applications—Standards for workers—40 C.F.R., § 170.122.
296-307-12035 Notice of applications to handler employers—Standards for workers—40 C.F.R., § 170.124.
296-307-12040 Pesticide safety training—Standards for workers—40 C.F.R., § 170.130.
296-307-12045 Posted pesticide safety information—Standards for workers—40 C.F.R., § 170.135.
296-307-12050 Decontamination—Standards for workers—40 C.F.R., § 170.150.
296-307-12055 Emergency assistance—Standards for workers—40 C.F.R., § 170.160.

Standard for Pesticide Handlers

296-307-130 Applicability of this section—Standards for pesticide handlers—40 C.F.R., § 170.202.
296-307-13005 Exemptions—Standards for handlers—40 C.F.R., § 170.204.
296-307-13010 Restrictions during applications—Standards for pesticide handlers—40 C.F.R., § 170.210.
296-307-13015 Providing specific information about applications—Standards for pesticide handlers—40 C.F.R., § 170.222.
296-307-13020 Notice of applications to agricultural employers—Standards for pesticide handlers—40 C.F.R., § 170.224.
296-307-13025 Pesticide safety training—Standards for pesticide handlers—40 C.F.R., § 170.230.
296-307-13030 Knowledge of labeling and site-specific information—Standards for pesticide handlers—40 C.F.R., § 170.232.
296-307-13035 Safe operation of equipment—Standards for pesticide handlers—40 C.F.R., § 170.234.
296-307-13040 Posted pesticide safety information—Standards for pesticide handlers—40 C.F.R., § 170.235.
296-307-13045 Personal protective equipment—Standards for pesticide handlers—40 C.F.R., § 170.240.
296-307-13050 Decontamination—Standards for pesticide handlers—40 C.F.R., § 170.250.
296-307-13055 Emergency assistance—Standards for pesticide handlers—40 C.F.R., § 170.260.

Part J

Pesticides Recordkeeping

296-307-145 Pesticides recordkeeping.
296-307-14505 What records must an employer keep for pesticide applications?
296-307-14510 Sample pesticide storage record.

Part J-1

Cholinesterase Monitoring

296-307-148 Scope and summary.
296-307-14805 Maintain handling records for covered pesticides.
296-307-14810 Implement a medical monitoring program.
296-307-14815 Identify a physician or other licensed health care professional.
296-307-14820 Make cholinesterase testing available.
296-307-14825 Respond to depressed cholinesterase levels.
296-307-14830 Provide medical removal protection benefits.
296-307-14835 Maintain records.
296-307-14840 Provide training.
296-307-14845 Implementation plan.

Part K

Working Near Overhead Lines

296-307-150 Employees working near overhead lines.
296-307-15003 What does this section cover?
296-307-15006 What clearance and safeguards are required to protect employees working near overhead lines?
296-307-15009 What signs must an employer post to warn employees working near overhead lines?
296-307-15012 When must an employer notify the utility of employees working near overhead lines?

Part L

Temporary Worker Housing

296-307-161 Temporary worker housing and cherry harvest camps.
296-307-16101 Purpose and applicability.
296-307-16103 Definitions.
296-307-16104 Technical assistance—Notice of violation.
296-307-16115 Maximum capacity for TWH occupants.
296-307-16120 Variance and procedure.
296-307-16125 Temporary worker housing sites and cherry harvest campsites.
296-307-16127 TWH management plan.
296-307-16130 Water supply.
296-307-16135 Sewage disposal.
296-307-16140 Electricity and lighting.
296-307-16145 Building requirements and maintenance.
296-307-16147 Tents.
296-307-16149 Carbon monoxide alarms, smoke detectors, and fire extinguishers.
296-307-16150 Laundry facilities.
296-307-16155 Handwashing and bathing facilities.
296-307-16160 Toilet facilities.
296-307-16165 Cooking and food-handling facilities.
296-307-16170 Cots, beds, bedding, and personal storage.
296-307-16175 First aid and safety.
296-307-16180 Refuse disposal.
296-307-16185 Insect and rodent control.
296-307-16190 Disease prevention and control.

INDOOR OPERATIONS

Part M

Guarding Tools and Equipment;

Farm Shops; Materials Handling

296-307-18005 How must fan blades be guarded?
296-307-18010 How must constant-running drives be guarded?
296-307-18015 What training must an employer provide for employees who use agricultural equipment?
296-307-18020 What requirements apply to machine controls?
296-307-18025 How must steam pipes be guarded?
296-307-185 Guarding powered saws.
296-307-18503 What general requirements apply to powered saws?
296-307-18506 How must band saws be guarded?
296-307-18509 How must radial arm saws be guarded?
296-307-18512 How must table saws be guarded?
296-307-18515 How must circular fuel-wood saws be guarded?
296-307-190 Guarding bench grinders, abrasive wheels, and portable grinders.
296-307-19003 What definitions apply to this section?
296-307-19006 What rules apply to guarding abrasive wheels?
296-307-19009 What are the use, mounting, and guarding rules for abrasive wheels?
296-307-19012 What requirements apply to flanges?
296-307-19015 How must vertical portable grinders be guarded?
296-307-19018 How must other portable grinders be guarded?
296-307-195 What rules apply to grounding and "dead man" controls for hand-held portable power tools?
296-307-200 Compressed air.
296-307-20005 May compressed air be used for cleaning?
296-307-20010 What requirements apply to compressed air tools?
296-307-205 Guarding portable powered tools.
296-307-20505 What requirements apply to guarding portable powered tools?
296-307-20510 What requirements apply to switches and controls on portable powered tools?
296-307-20515 What requirements apply to pneumatic powered tools and hose?
296-307-220 Power lawnmowers.
296-307-22003 What definitions apply to this section?
296-307-22006 What are the general guarding requirements for power lawnmowers?
296-307-22009 What rules apply to walk-behind and riding rotary mowers?
296-307-22012 What rules apply to walk-behind rotary mowers?
296-307-22015 What rules apply to riding rotary mowers?
296-307-225 Jacks.
296-307-22503 What definitions apply to this section?
296-307-22506 How shall the rated load be marked on a jack?
296-307-22509 What rules apply to the operation and maintenance of jacks?

296-307-230 What are the general requirements for materials handling and storage?
296-307-232 What requirements apply to conveyors?

Part N

Sanitation for Indoor Workplaces

296-307-240 Sanitation for fixed, indoor workplaces.
296-307-24001 Must an employer comply with state health regulations?
296-307-24003 What does this section cover?
296-307-24006 What definitions apply to this section?
296-307-24009 What housekeeping requirements apply to fixed, indoor workplaces?
296-307-24012 How must the potable water supply be maintained?
296-307-24015 How must the nonpotable water supply be maintained?
296-307-24018 What toilet facilities must an employer provide?
296-307-24021 What washing facilities must an employer provide?
296-307-24024 What requirements apply to lavatories?
296-307-24027 When must an employer provide change rooms?
296-307-24030 What requirements apply to consumption of food and beverages in the workplace?
296-307-24033 How must waste be stored and removed?
296-307-24036 When must an employer have a vermin control program?

Part O

Walking Working Surfaces; Fixed Industrial Stairs; Aerial Manlifts

296-307-250 Walking working surfaces, elevated walkways, and platforms.
296-307-25003 What definitions apply to this section?
296-307-25006 When may railings be omitted?
296-307-25009 What protection must an employer provide for floor openings?
296-307-25012 What protection must an employer provide for wall openings and holes?
296-307-25015 What protection must an employer provide for open-sided floors, platforms, and runways?
296-307-25018 What requirements apply to stairway railings and guards?
296-307-25021 How must a standard railing be constructed?
296-307-25024 How must a stair railing be constructed?
296-307-25027 What are the requirements for railing dimensions?
296-307-25030 What requirements apply to toeboards?
296-307-25033 How must handrails and railings be constructed?
296-307-25036 What materials may be used for floor opening covers?
296-307-25039 How must skylight screens be constructed and mounted?
296-307-25042 What protection must an employer provide for wall openings?
296-307-260 Fixed industrial stairs.
296-307-26003 What does this section cover?
296-307-26006 What definitions apply to this section?
296-307-26009 Where are fixed stairs required?
296-307-26012 Where are spiral stairs prohibited?
296-307-26015 How strong must fixed stairs be?
296-307-26018 How wide must fixed stairs be?
296-307-26021 What angles may stairways be installed at?
296-307-26024 What requirements apply to stair treads?
296-307-26027 What requirements apply to the length of stairways?
296-307-26030 What requirements apply to railings and handrails on fixed stairs?
296-307-26033 What requirements apply to alternating tread-type stairs?
296-307-26036 What other requirements apply to fixed stairs?
296-307-270 Aerial manlift equipment.
296-307-27005 What requirements apply to aerial manlift equipment?
296-307-27010 What requirements apply to using aerial manlift equipment?

Part P

Guarding Power

Transmission Machinery

296-307-280 Guarding power transmission machinery.
296-307-28002 What power transmission belts are covered by this section?
296-307-28004 What does "guarded by location" mean?
296-307-28006 What general requirements apply to machine guarding?
296-307-28014 What requirements apply to prime-mover guards?
296-307-28016 What requirements apply to guarding shafting?
296-307-28018 What requirements apply to guarding pulleys?
296-307-28020 What requirements apply to guarding horizontal belt, rope, and chain drives?
296-307-28022 What requirements apply to guarding overhead horizontal belt, rope, and chain drives?
296-307-28024 What requirements apply to guarding vertical and inclined belts?
296-307-28026 What requirements apply to guarding cone-pulley belts?
296-307-28028 What requirements apply to guarding belt tighteners?
296-307-28030 What requirements apply to guarding gears, sprockets, and chains?
296-307-28032 What requirements apply to guarding friction drives?
296-307-28034 What requirements apply to guarding keys, set screws, and other projections?
296-307-28036 What requirements apply to guarding collars and couplings?
296-307-28038 Must self-lubricating bearings be used?
296-307-28040 What requirements apply to guarding clutches, cutoff couplings, and clutch pulleys?
296-307-28042 What requirements apply to guarding belt shifters, clutches, shippers, poles, perches, and fasteners?
296-307-28044 What materials must be used for standard guards?
296-307-28046 How must standard guards be manufactured?
296-307-28048 What requirements apply to disk, shield, and U-guards?
296-307-28050 What materials must be used for guards?
296-307-28052 When may wood guards be used?
296-307-28054 What materials may be used for guarding horizontal overhead belts?
296-307-28056 What clearance must be maintained between guards and power transmission machinery?
296-307-28058 How must overhead rope and chain-drive guards be constructed?
296-307-28060 What materials must be used for guardrails and toeboards?
296-307-28062 How must shafting be maintained?
296-307-28064 How must pulleys be maintained?
296-307-28066 How must belts be maintained?
296-307-28068 How must other equipment be maintained?
296-307-290 Auger conveying equipment.
296-307-29005 What requirements apply to auger conveying equipment?
296-307-29010 What other requirements apply to auger conveying equipment manufactured after October 25, 1976?
296-307-300 Guarding farmstead equipment.
296-307-30003 What does this section cover?
296-307-30006 How must power takeoff shafts of farmstead equipment be guarded?
296-307-30009 How must other power transmission components of farmstead equipment be guarded?
296-307-30012 How must functional components of farmstead equipment be guarded?
296-307-30015 When may guards be removed on farmstead equipment?
296-307-30018 What requirements apply to electrical control for maintaining and servicing farmstead equipment?
296-307-30021 What additional guarding requirements apply to farmstead equipment?

Part Q

Control of Hazardous

Energy (Lockout-tagout)

296-307-320 Control of hazardous energy (lockout-tagout).
296-307-32001 What does this section cover?
296-307-32003 When does this section not apply?
296-307-32005 What definitions apply to this section?
296-307-32007 What are the required elements of an energy control program?
296-307-32009 How does an employer determine when to use lockout vs. tagout?
296-307-32011 What requirements must be met to substitute tagout for lockout?
296-307-32013 What are the required elements of energy control procedures?
296-307-32015 What requirements apply to lockout and tagout devices and materials?
296-307-32017 How often must the energy control procedure be inspected?
296-307-32019 What general requirements apply to energy control program training and communication?
296-307-32021 What additional requirements apply to tagout training and communication?
296-307-32023 What requirements apply to employee retraining?
296-307-32025 What training records must an employer keep?
296-307-32027 Who may perform lockout or tagout?
296-307-32029 Who must be notified of lockout and tagout?
296-307-32031 What order of events must lockout or tagout procedures follow?

296-307-32033 What order of events must be followed to remove lockout or tagout devices?
296-307-32035 What requirements apply to testing and positioning machines and equipment?
296-307-32037 What requirements apply to outside servicing contractors?
296-307-32039 What requirements apply to group lockout or tagout?
296-307-32041 What requirements apply to lockout/tagout during shift changes?

Part R

Safety Color Coding; Accident Prevention Signs and Tags

296-307-330 Safety color coding; accident prevention signs and tags.
296-307-33001 What definitions apply to this section?
296-307-33003 What does red identify in safety color coding?
296-307-33005 What does yellow identify in safety color coding?
296-307-33007 When should signs and tags use "danger" versus "caution"?
296-307-33009 What are the design and color specifications for accident prevention signs?
296-307-33011 What are the proper uses of accident prevention tags?

Part S

Fire Protection and Ignition Sources; Exit Routes

296-307-340 Portable fire extinguishers.
296-307-34003 What does this section cover?
296-307-34006 Who is exempt from the requirements of this section?
296-307-34009 What general requirements apply to portable fire extinguishers?
296-307-34012 How should portable fire extinguishers be selected and distributed?
296-307-34015 What are the requirements for inspection, maintenance and testing of portable fire extinguishers?
296-307-34018 What requirements apply to hydrostatic testing?
296-307-34021 What are the training requirements for portable fire extinguishers?
296-307-345 Employee alarm systems.
296-307-34503 What does this section cover?
296-307-34506 What general requirements apply to employee alarm systems?
296-307-34509 What are the installation and restoration requirements for employee alarm systems?
296-307-34512 How must employee alarm systems be maintained and tested?
296-307-34515 Where must manually operated devices be located?
296-307-350 Exit routes.
296-307-35003 What does this section cover?
296-307-35006 What definitions apply to this section?
296-307-35009 What are the design requirements for exit routes?
296-307-35012 What are the operation and maintenance requirements for exit routes?
296-307-35015 What are the requirements for an emergency action plan?
296-307-35018 What are the requirements for a fire prevention plan?

Part T

Electrical

296-307-360 Electrical.
296-307-36005 What does this part cover?
296-307-36010 What definitions apply to this part?
296-307-362 General electrical requirements.
296-307-36203 What electrical equipment must be approved?
296-307-36206 How must electrical equipment safety be determined?
296-307-36209 What requirements apply to guarding live parts?
296-307-36212 What workspace must be provided?
296-307-36215 What general requirements apply to splices?
296-307-36218 What protection must be provided against combustible materials?
296-307-36221 How must electrical equipment be marked?
296-307-36224 How must disconnecting means be marked?
296-307-36227 What access and working space must be provided for electrical equipment of 600 volts, nominal, or less?
296-307-36230 What access and working space must be provided for electrical equipment over 600 volts, nominal?
296-307-364 Electrical installation and maintenance.
296-307-36403 How must flexible cords and cables be installed and maintained?
296-307-36406 How must attachment plugs and receptacles be installed and maintained?
296-307-36409 What must employees do when equipment causes electrical shock?
296-307-36412 What grounding and bonding requirements apply to equipment installation and maintenance?
296-307-36415 What requirements apply to disconnecting means?
296-307-36418 What requirements apply to identification and load rating of electrical equipment?
296-307-36421 How must equipment be installed in wet locations?
296-307-366 Wiring design and protection.
296-307-36603 How must grounded and grounding conductors be used and identified?
296-307-36606 What ampere rating must outlet devices have?
296-307-36609 What requirements apply to conductors?
296-307-36612 What design and protection requirements apply to service-entrances?
296-307-36615 What overcurrent protection must be provided?
296-307-36618 What premises wiring systems must be grounded?
296-307-36621 Must the conductor be grounded for AC premises wiring?
296-307-36624 What general requirements apply to grounding conductors?
296-307-36627 Must the path to ground be continuous?
296-307-36630 What supports, enclosures, and equipment must be grounded?
296-307-36633 How must fixed equipment be grounded?
296-307-36636 How must high voltage systems be grounded?
296-307-368 Wiring methods, components, and equipment for general use.
296-307-36803 Does this section apply to factory-assembled equipment?
296-307-36806 What wiring methods must be used for temporary wiring?
296-307-36809 When may cable trays be used?
296-307-36812 What requirements apply to open wiring on insulators?
296-307-36815 What wiring requirements apply to cabinets, boxes, and fittings?
296-307-36818 What requirements apply to switches?
296-307-36821 Where must switchboards and panelboards be located?
296-307-36824 When must conductors be insulated?
296-307-36827 When may flexible cords and cables be used?
296-307-36830 How must flexible cords and cables be identified, spliced, and terminated?
296-307-36833 What requirements apply to multiconductor portable cable?
296-307-36836 When may fixture wires be used?
296-307-36839 What requirements apply to wiring for lighting fixtures, lampholders, lamps, and receptacles?
296-307-36842 What requirements apply to wiring for receptacles, cord connectors, and attachment plugs (caps)?
296-307-36845 What requirements apply to wiring for appliances?
296-307-36848 What requirements apply to wiring for motors, motor circuits, and controllers?
296-307-36851 What requirements apply to wiring for transformers?
296-307-36854 What requirements apply to wiring for capacitors?
296-307-36857 How must storage batteries be ventilated?
296-307-36860 What other miscellaneous requirements apply to wiring methods?
296-307-370 Special purpose equipment and installations.
296-307-37003 What requirements apply to cranes, hoists, and runways?
296-307-37006 What requirements apply to elevators, dumbwaiters, escalators, and moving walks?
296-307-37009 What requirements apply to the disconnecting means for electric welders?
296-307-37012 What requirements apply to electrically driven or controlled irrigation machines?
296-307-372 Hazardous (classified) locations.
296-307-37203 What does this section cover?
296-307-37206 What classifications apply to this section?
296-307-37209 What equipment, wiring methods, and installations may be used in hazardous locations?
296-307-37212 How must conduit be installed in hazardous locations?
296-307-37215 Which equipment may be used in Division 1 and 2 locations?
296-307-37218 What requirements apply to motors and generators used in hazardous locations?
296-307-374 Special systems.
296-307-37403 What requirements apply to systems over 600 volts, nominal?
296-307-37406 What requirements apply to emergency power systems?
296-307-37409 How are Class 1, Class 2, and Class 3 remote control, signaling, and power-limited circuits classified?
296-307-37412 What requirements apply to fire protective signaling systems?
296-307-376 Working on or near exposed energized parts.
296-307-37603 What does this section cover?

296-307-37606 Who may work on energized parts?
296-307-37609 What requirements apply to working near low voltage lines?
296-307-37612 What requirements apply to qualified persons working near overhead lines?
296-307-37615 What requirements apply to vehicles and mechanical equipment near overhead lines?
296-307-37618 What lighting must be provided for employees working near exposed energized parts?
296-307-37621 What requirements apply to working near exposed energized parts in confined spaces?
296-307-37624 What housekeeping requirements apply to working near exposed energized parts?
296-307-37627 Who may defeat an electrical safety interlock?
296-307-378 Safety-related work practices.
296-307-37801 What does this section cover?
296-307-37803 How must employees be trained on safety practices?
296-307-37805 How must safety-related work practices be chosen and used?
296-307-37807 What work practices must be followed for work on exposed deenergized parts?
296-307-37809 Must an employer have a written copy of lockout-tagout procedures?
296-307-37811 What work practices must be followed for deenergizing equipment?
296-307-37813 How must locks and tags be applied?
296-307-37815 What work practices must be followed to verify deenergization?
296-307-37817 What work practices must be followed when reenergizing equipment?
296-307-37819 What safety-related work practices relate to portable electric equipment?
296-307-37821 What safety-related work practices relate to electric power and lighting circuits?
296-307-37823 What safety-related work practices relate to test instruments and equipment?
296-307-37825 What safety-related work practices relate to flammable materials?
296-307-380 Electrical protective equipment.
296-307-38003 How must protective equipment be used?
296-307-38006 What requirements apply to general protective equipment and tools?
296-307-38009 What manufacturing and marking requirements apply to electrical protective devices?
296-307-38012 What electrical requirements apply to electrical protective devices?
296-307-38015 What workmanship and finish requirements apply to electrical protective devices?
296-307-38018 How must electrical protective devices be maintained and used?

SPECIALIZED OPERATIONS

Part U-1

Hazardous Materials—**Anhydrous Ammonia**

296-307-400 Anhydrous ammonia.
296-307-40001 What does this section cover?
296-307-40003 What definitions apply to this section?
296-307-40005 What general requirements apply to the storage and handling of anhydrous ammonia?
296-307-40007 What requirements apply to systems mounted on farm wagons (implements of husbandry) for the transportation of ammonia?
296-307-40009 What requirements apply to systems mounted on farm wagons (implements of husbandry) for the application of ammonia?
296-307-40011 What requirements must approved anhydrous ammonia equipment meet?
296-307-40013 What requirements apply to the construction, original test, and requalification of nonrefrigerated containers?
296-307-40015 How must nonrefrigerated containers and systems (other than DOT containers) be marked?
296-307-40017 Where may anhydrous ammonia containers be located?
296-307-40019 What requirements apply to container accessories?
296-307-40021 What requirements apply to piping, tubing, and fittings?
296-307-40023 What specifications must hoses meet?
296-307-40025 What requirements apply to safety-relief devices?
296-307-40027 What emergency precautions are required when handling anhydrous ammonia?
296-307-40029 What requirements apply to filling densities?
296-307-40031 What requirements apply to the transfer of liquids?
296-307-40033 What requirements apply to tank car unloading points and operations?
296-307-40035 What requirements apply to the liquid-level gauging device?
296-307-40037 How should aboveground uninsulated containers be maintained?
296-307-40039 What requirements apply to electrical equipment and wiring?

Part U-2

Hazardous Materials—**Liquified Petroleum Gas**

296-307-410 Storage and handling of liquefied petroleum gases.
296-307-41001 What does this part cover?
296-307-41003 Which LP-gas installations are not covered by this part?
296-307-41005 What definitions apply to this part?
296-307-41007 When must LP-gas be odorized?
296-307-41009 Must LP-gas containers and equipment be approved?
296-307-41011 What construction and test requirements must containers meet?
296-307-41013 How must containers be welded?
296-307-41015 How must containers be marked?
296-307-41017 Where must containers be located?
296-307-41019 What requirements apply to valves and accessories?
296-307-41021 What requirements apply to piping, tubing, and fittings?
296-307-41023 What specifications must hoses meet?
296-307-41025 What requirements apply to safety devices?
296-307-41027 How must indirect fired vaporizers be constructed and installed?
296-307-41029 How must atmospheric vaporizers be constructed and installed?
296-307-41031 How must direct gas-fired vaporizers be constructed and installed?
296-307-41033 How must direct gas-fired tank heaters be constructed and installed?
296-307-41035 How must dehydrators be constructed and installed?
296-307-41037 What are the maximum filling densities?
296-307-41039 What requirements apply to LP-gas in buildings?
296-307-41041 What requirements apply to transfer of liquids?
296-307-41043 Must workers be trained?
296-307-41045 What fire protection must be provided for LP-gas installations?
296-307-41047 What electrical requirements apply to LP-gas installations?
296-307-41049 What requirements apply to liquid-level gauging devices?
296-307-41051 What requirements apply to appliances?
296-307-415 Cylinder systems.
296-307-41501 What does this section cover?
296-307-41503 What is a "cylinder system"?
296-307-41505 How must containers be marked for cylinder systems?
296-307-41507 What additional requirements apply to cylinder systems installed outdoors?
296-307-41509 What additional requirements apply to cylinder system installed indoors?
296-307-41511 What requirements apply to valves and accessories?
296-307-41513 What requirements apply to safety devices for cylinder systems?
296-307-41515 What other requirements apply to cylinder systems?
296-307-420 Systems using non-DOT containers.
296-307-42001 What does this section cover?
296-307-42003 How must non-DOT containers be designed and classified?
296-307-42005 What requirements apply to valves and accessories, filler pipes, and discharge pipes for non-DOT containers?
296-307-42007 What additional requirements apply to safety devices for non-DOT containers?
296-307-42009 When may non-DOT containers be reinstalled?
296-307-42011 What is the maximum capacity allowed for non-DOT containers?
296-307-42013 How must non-DOT containers be installed?
296-307-42015 How must non-DOT containers be protected?
296-307-42017 What requirements apply to non-DOT containers in industrial plants?
296-307-42019 What requirements apply to container-charging plants?
296-307-42021 What fire protection must be provided for non-DOT containers?
296-307-42023 What other requirements apply to non-DOT containers?
296-307-425 LP-gas as a motor fuel.
296-307-42501 What does this section cover?
296-307-42503 What general requirements apply to LP-gas used as a motor fuel?
296-307-42505 How must fuel containers be designed and classified?
296-307-42507 How must fuel containers be installed?
296-307-42509 What requirements apply to valves and accessories?

296-307-42511 What requirements apply to piping, tubing, and fittings?
296-307-42513 What requirements apply to safety devices?
296-307-42515 What requirements apply to vaporizers?
296-307-42517 What requirements apply to gas regulating and mixing equipment?
296-307-42519 What is the maximum container capacity allowed?
296-307-42521 What requirements apply to stationary engines used indoors?
296-307-42523 What requirements apply to portable engines used indoors?
296-307-42525 What requirements apply to industrial trucks used indoors?
296-307-42527 How must LP-gas-fueled vehicles be garaged?
296-307-430 Storage of containers awaiting use or resale.
296-307-43001 What does this section cover?
296-307-43003 What general requirements apply to storage of containers?
296-307-43005 How must containers be stored within buildings frequented by the public?
296-307-43007 How must containers be stored in buildings not frequented by the public?
296-307-43009 How must containers be stored within special buildings or rooms?
296-307-43011 How must containers be stored outdoors?
296-307-43013 What fire protection must be provided for stored containers?
296-307-435 LP-gas system installations on commercial vehicles.
296-307-43501 What does this section cover?
296-307-43503 How must containers be constructed?
296-307-43505 What is the maximum capacity allowed for LP-gas installations on commercial vehicles?
296-307-43507 Where must systems be located?
296-307-43509 What requirements apply to valves and accessories?
296-307-43511 What requirements apply to safety devices?
296-307-43513 What types of systems may be used on commercial vehicles?
296-307-43515 What requirements apply to enclosures and mounting?
296-307-43517 What requirements apply to piping, tubing, and fittings?
296-307-43519 What requirements apply to appliances?
296-307-43521 What general precautions must be followed for LP-gas system installations on commercial vehicles?
296-307-43523 How must containers be charged?
296-307-43525 What fire protection must be provided for mobile cook units?
296-307-440 LP-gas service stations.
296-307-44001 What does this section cover?
296-307-44003 How must storage containers be designed and classified?
296-307-44005 What requirements apply to valves and accessories?
296-307-44007 What requirements apply to safety devices?
296-307-44009 What is the maximum capacity allowed for containers?
296-307-44011 How must storage containers be installed?
296-307-44013 What equipment must be protected against tampering?
296-307-44015 What requirements apply to the transport truck unloading point?
296-307-44017 What requirements apply to piping, valves, and fittings?
296-307-44019 What requirements apply to pumps and accessory equipment?
296-307-44021 What requirements apply to LP-gas dispensing devices?
296-307-44023 Is smoking allowed at LP-gas service stations?
296-307-44025 What fire protection must be provided at LP-gas service stations?

Part U-3

Other Hazardous Materials

Dipping and Coating Operations (Dip Tanks)

296-307-445 Scope.
296-307-450 General requirements.

Construction

296-307-45005 Construct safe dip tanks.

Ventilation

296-307-45010 Provide proper ventilation for the vapor area.
296-307-45015 Take additional precautions if you recirculate ventilation system exhaust air into the workplace.
296-307-45020 Take additional precautions when using an exhaust hood.

Inspection

296-307-45025 Periodically inspect your dip tanks and associated equipment and correct any deficiencies.

First Aid

296-307-45030 Make sure employees working near dip tanks know appropriate first-aid procedures.

Cleaning

296-307-45035 Prepare dip tanks before cleaning.

Welding

296-307-45045 Protect employees during welding, burning, or other work using open flames.

Liquids Harmful to Skin

296-307-45050 Protect employees that use liquids that may burn, irritate, or otherwise harm the skin.
296-307-455 Additional requirements for dip tanks using flammable or combustible liquids.

Construction

296-307-45505 Include additional safeguards when constructing dip tanks.
296-307-45510 Provide overflow pipes.
296-307-45515 Provide bottom drains.

Fire Protection

296-307-45520 Provide fire protection in the vapor area.
296-307-45525 Provide additional fire protection for large dip tanks.

Electrical Wiring and Equipment and Sources of Ignition

296-307-45535 Prevent static electricity sparks or arcs when adding liquids to a dip tank.
296-307-45540 Control ignition sources.
296-307-45545 Provide safe electrical wiring and equipment where the liquid can drip or splash.

Housekeeping

296-307-45550 Keep the area around dip tanks clear of combustible material and properly dispose of waste.

Heating Liquid

296-307-45555 Make sure heating the liquid in your dip tanks does not cause a fire.

Heat Drying

296-307-45560 Make sure a heating system used for drying objects does not cause a fire.

Conveyors

296-307-45565 Make sure conveyor systems are safe.
296-307-460 Additional requirements for dip tanks used for specific processes.

Hardening or Tempering

296-307-46005 Meet specific requirements if you use a hardening or tempering tank.

Vapor Degreasing

296-307-46025 Provide additional safeguards for vapor degreasing tanks.

Spray Cleaning or Degreasing

296-307-46030 Control liquid spray over an open surface cleaning or degreasing tank.
296-307-465 Definitions.

Part V

Welding

296-307-475 Welding, cutting, and brazing.
296-307-47501 What definitions apply to this part?
296-307-480 Installation and operation of oxygen fuel gas systems for welding and cutting.
296-307-48001 What general requirements apply to oxygen fuel gas systems?
296-307-48003 What requirements apply to portable cylinders?
296-307-48005 What general requirements apply to storing compressed gas cylinders?
296-307-48007 How must fuel-gas cylinders be stored?
296-307-48009 How must oxygen cylinders be stored?
296-307-48011 What general operating procedures apply to working with cylinders and containers?

296-307-48013 What requirements apply to safety devices on cylinders?
296-307-48015 How must cylinders be transported?
296-307-48017 How must cylinders be handled?
296-307-48019 What requirements apply to cylinder valves?
296-307-48021 What requirements apply to cylinder regulators?
296-307-48023 What requirements apply to fuel-gas manifolds?
296-307-48025 What requirements apply to high pressure oxygen manifolds?
296-307-48027 What requirements apply to low pressure oxygen manifolds?
296-307-48029 What requirements apply to manifolding portable outlet headers?
296-307-48031 What operating procedures apply to cylinder manifolds?
296-307-48033 How must service piping systems be designed?
296-307-48035 What requirements apply to piping joints?
296-307-48037 How must service piping systems be installed?
296-307-48039 How must service piping systems be painted and marked?
296-307-48041 How must service piping systems be tested?
296-307-48043 How must equipment be installed?
296-307-48045 How must service piping systems be protected?
296-307-48047 What requirements apply to piping protective equipment?
296-307-48049 What requirements apply to station outlet protective equipment?
296-307-48051 What requirements apply to hose and hose connections?
296-307-48053 What requirements apply to pressure-reducing regulators?
296-307-485 Installation and operation of resistance welding equipment.
296-307-48501 What general requirements apply to resistance welding equipment?
296-307-48503 What requirements apply to portable welding machines?
296-307-48505 What requirements apply to flash welding equipment?
296-307-48507 Who must perform a job hazard analysis?
296-307-48509 What maintenance requirements apply to resistance welding equipment?
296-307-490 Application, installation, and operation of arc welding and cutting equipment.
296-307-49001 What environmental conditions must be taken into account when selecting arc welding equipment?
296-307-49003 What voltages must arc welding equipment use?
296-307-49005 How must arc welding equipment be designed?
296-307-49007 How must arc welding equipment be installed?
296-307-49009 How must arc welding equipment be grounded?
296-307-49011 What requirements apply to supply connections and conductors?
296-307-49013 How must arc welding equipment be operated?
296-307-49015 How must arc welding equipment be maintained?
296-307-495 Fire prevention and protection.
296-307-49501 What basic fire prevention precautions must be taken?
296-307-49503 What special fire prevention precautions must be taken?
296-307-49505 What precautions must be taken when welding or cutting containers?
296-307-49507 What precautions must be taken when welding in confined spaces?
296-307-500 Protection of employees.
296-307-50001 How must eye protection be selected?
296-307-50003 What specifications must eye protection meet?
296-307-50005 What protective clothing must welders wear?
296-307-50007 What other requirements apply to employee protection?
296-307-50009 What employee protection must be provided in confined spaces?
296-307-50011 What general requirements apply to welding ventilation?
296-307-50013 What ventilation must be provided for general welding and cutting?
296-307-50015 What requirements apply to local exhaust hoods and booths?
296-307-50017 What ventilation must be provided in confined spaces?
296-307-50019 What requirements apply to welding fluorine compounds?
296-307-50021 What requirements apply to welding zinc?
296-307-50023 What requirements apply to welding lead?
296-307-50025 What requirements apply to welding beryllium?
296-307-50027 What requirements apply to welding cadmium?
296-307-50029 What requirements apply to welding mercury?

Part W

Powered Industrial Trucks (Forklifts)

296-307-520 Powered industrial trucks (forklifts).
296-307-52001 What does this section cover?
296-307-52003 What is a "powered industrial truck"?
296-307-52005 What manufacturer's requirements apply to powered industrial trucks?
296-307-52007 What are the classifications of powered industrial trucks?
296-307-52009 What must a user consider before choosing a powered industrial truck?
296-307-52011 What requirements determine which trucks to use in specific hazardous environments?
296-307-52013 In what environments may converted trucks be used?
296-307-52015 What requirements apply to overhead safety guards?
296-307-52017 What requirements apply to load backrests?
296-307-52019 What requirements apply to fuel handling and storage?
296-307-52021 What requirements apply to lighting for operating areas?
296-307-52023 What level of carbon monoxide gas is allowed?
296-307-52025 What requirements apply to dockboards (bridge plates)?
296-307-52027 What rules apply to loading trucks, trailers, and railroad cars with powered industrial trucks?
296-307-52029 What are the operator training requirements for powered industrial trucks?
296-307-52030 Is there any additional (nonmandatory) information that may assist me with powered industrial truck operator training?
296-307-52031 What requirements apply to operating powered industrial trucks?
296-307-52033 When may trucks be used to open or close freight car doors?
296-307-52035 What requirements apply to lifting employees on the forks of trucks?
296-307-52037 What requirements apply to using platforms for hoisting employees?
296-307-52039 What requirements apply to traveling in a powered industrial truck?
296-307-52041 What requirements apply to traveling speeds of powered industrial trucks?
296-307-52043 What requirements apply to loading powered industrial trucks?
296-307-52045 What requirements apply to servicing powered industrial trucks?
296-307-52047 What requirements apply to maintaining powered industrial trucks?

Part X

Rim Wheel Servicing

296-307-530 Rim wheel servicing.
296-307-53001 What does this section cover?
296-307-53003 What definitions apply to rim wheel servicing?
296-307-53005 What training must an employer provide for employees who service rim wheels?
296-307-53007 What requirements apply to restraining devices?
296-307-53009 What other equipment must an employer provide for rim wheel servicing?
296-307-53011 What requirements apply to wheel component assembly?
296-307-53013 What are the safe operating procedures for servicing multipiece rim wheels?
296-307-53015 What are the safe operating procedures for servicing single-piece rim wheels?
296-307-53017 How can an employer order the OSHA charts?

Part Y

Occupational Health Standards

Part Y-1

Employer Chemical Hazard Communication

296-307-550 Employer chemical hazard communication—Introduction.
296-307-55005 Develop, implement, maintain, and make available a written Chemical Hazard Communication Program.
296-307-55010 Identify and list all the hazardous chemicals present in your workplace.
296-307-55015 Obtain and maintain material safety data sheets (MSDSs) for each hazardous chemical used.
296-307-55020 Make sure material safety data sheets are readily accessible to your employees.
296-307-55025 Label containers holding hazardous chemicals.
296-307-55030 Inform and train your employees about hazardous chemicals in your workplace.
296-307-55035 Follow these rules for laboratories using hazardous chemicals.
296-307-55040 Follow these rules for handling chemicals in factory-sealed containers.

296-307-55045 Translate certain chemical hazard communication documents upon request.
296-307-55050 Attempt to obtain a material safety data sheet (MSDS) upon request.
296-307-55055 Items or chemicals exempt from the rule, and exemptions from labeling.
296-307-55060 Definitions.

Part Y-2

Material Safety Data Sheets and Label Preparation

296-307-560 Scope.
296-307-56005 Hazard evaluation.
296-307-56010 Conduct complete hazard evaluations.
296-307-56015 Provide access to hazard evaluation procedures.
296-307-56020 Material safety data sheets.
296-307-56025 Develop or obtain material safety data sheets (MSDSs).
296-307-56030 Provide MSDSs for products shipped, transferred or sold over-the-counter.
296-307-56035 Follow-up if an MSDS is not provided.
296-307-56040 Labeling.
296-307-56045 Label containers of hazardous chemicals.
296-307-56050 Definitions.
296-307-570 Lighting rule.
296-307-57005 Provide and maintain adequate lighting.
296-307-590 Environmental tobacco smoke in the office—Summary.
296-307-59005 Prohibit tobacco smoke in your office work environment.

Part Y-3

Lighting

Part Y-4

Environmental Tobacco Smoke in the Office

Part Y-5

Respirators

296-307-594 Scope.
296-307-596 Respirator program administrator.
296-307-59605 Designate a program administrator.
296-307-598 Voluntary respirator use requirements.
296-307-59805 Make sure voluntary use of respirators is safe.
296-307-59810 Keep voluntary use program records.
296-307-600 Written respirator program and recordkeeping.
296-307-60005 Develop and maintain a written program.
296-307-60010 Keep respirator program records.
296-307-602 Respirator selection.
296-307-60205 Select and provide appropriate respirators.
296-307-604 Medical evaluations.
296-307-60405 Provide medical evaluations.
296-307-606 Fit testing.
296-307-60605 Conduct fit testing.
296-307-608 Training.
296-307-60805 Provide effective training.
296-307-610 Maintenance.
296-307-61005 Maintain respirators in a clean and reliable condition.
296-307-61010 Store respirators properly.
296-307-61015 Inspect and repair respirators.
296-307-612 Safe use and removal of respirators.
296-307-61205 Prevent sealing problems with tight-fitting respirators.
296-307-61210 Make sure employees leave the use area before removing respirators.
296-307-614 Standby requirements for immediately dangerous to life or health (IDLH) conditions.
296-307-61405 Provide standby assistance in immediately dangerous to life or health (IDLH) conditions.
296-307-616 Air quality for self-contained breathing apparatus (SCBA) and air-line respirators.
296-307-61605 Make sure breathing air and oxygen meet established specifications.
296-307-61610 Prevent conditions that could create a hazardous breathing air supply.
296-307-61615 Make sure compressors do not create a hazardous breathing air supply.
296-307-618 Labeling of air-purifying respirator filters, cartridges, and canisters.
296-307-61805 Keep labels readable on respirator filters, cartridges, and canisters during use.
296-307-620 Required procedures for respiratory protection program.
296-307-62005 Use this medical questionnaire for medical evaluations.
296-307-62010 Follow these fit-testing procedures for tight-fitting respirators.
296-307-62015 Follow procedures established for cleaning and disinfecting respirators.
296-307-62020 Follow procedures established for seal checking respirators.
296-307-622 Definitions.

Part Y-6

Respiratory Hazards

296-307-624 Scope.
296-307-626 Evaluate and control employee exposures.
296-307-62605 Identify and evaluate respiratory hazards.
296-307-62610 Control employee exposures.
296-307-62615 Use respirators.
296-307-62620 Notify employees.
296-307-62625 Permissible exposure limits of air contaminants.
296-307-628 Definitions.

Part Y-7

Hearing Loss Prevention (Noise)

296-307-630 Scope.

Hearing Loss Prevention Program

296-307-632 Summary.
296-307-63205 Conduct employee noise exposure monitoring.
296-307-63210 Control employee noise exposures that equal or exceed 90 dBA TWA_8.
296-307-63215 Make sure employees use hearing protection when their noise exposure equals or exceeds 85 dBA TWA_8.
296-307-63220 Make sure exposed employees receive training about noise and hearing protection.
296-307-63225 Make sure warning signs are posted for areas where noise levels equal or exceed 115 dBA.
296-307-63230 Arrange for oversight of audiometric testing.
296-307-63235 Identify and correct deficiencies in your hearing loss prevention program.
296-307-63240 Document your hearing loss prevention activities.

Noise Measurement and Computation

296-307-634 Summary.
296-307-63405 Make sure that noise-measuring equipment meets recognized standards.
296-307-63410 Measure employee noise exposure.
296-307-63415 Use these equations when estimating full-day noise exposure from sound level measurements.

Audiometric Testing

296-307-636 Summary.
296-307-63605 Provide audiometric testing at no cost to employees.
296-307-63610 Establish a baseline audiogram for each exposed employee.
296-307-63615 Conduct annual audiograms.
296-307-63620 Review audiograms that indicate a standard threshold shift.
296-307-63625 Keep the baseline audiogram without revision, unless annual audiograms indicate a persistent threshold shift or a significant improvement in hearing.
296-307-63630 Make sure a record is kept of audiometric tests.
296-307-63635 Make sure audiometric testing equipment meets these requirements.

Options to Audiometric Testing

296-307-638 Summary.
296-307-63805 Conduct hearing protection audits at least quarterly.
296-307-63810 Make sure staff conducting audits are properly trained.
296-307-63815 Assess the hearing protection used by each employee during audits.
296-307-63820 Document your hearing protection audits.

Third-party Audiometric Tests

296-307-63825 Make sure third-party hearing loss prevention programs meet the following requirements.
296-307-640 Noise definitions.

Part Y-8

Confined Spaces

296-307-642 Scope.
296-307-644 Summary.
296-307-64402 Identify permit-required confined spaces.
296-307-64404 Inform employees and control entry to permit-required confined spaces.

296-307-64406 Follow these requirements when you contract with another employer to enter your confined space.

Permit-required Confined Space Program

296-307-646 Summary.
296-307-64602 Develop a written permit-required confined space program.
296-307-64604 Meet these additional requirements if your employees enter another employer's confined space.

Employee Training

296-307-648 Summary.
296-307-64802 Provide employee training.
296-307-64804 Certify employee proficiency.

Permit Entry Procedures

296-307-650 Summary.
296-307-65002 Implement procedures for entry permits.
296-307-65004 Use an entry permit that contains all required information.
296-307-65006 Keep and review your entry permits.
296-307-65008 Prevent unauthorized entry.
296-307-65010 Provide, maintain, and use proper equipment.
296-307-65012 Evaluate and control hazards for safe entry.
296-307-65014 Make sure you have adequate rescue and emergency services available.
296-307-65016 Use nonentry rescue systems or methods whenever possible.
296-307-65018 Make sure entry supervisors perform their responsibilities and duties.
296-307-65020 Provide an attendant outside the permit-required confined space.
296-307-65022 Make sure entrants know the hazardous conditions and their duties.
296-307-65024 Implement procedures for ending entry.
296-307-652 Alternate entry procedures.
296-307-65202 Make sure the following conditions are met if using alternate entry procedures.
296-307-65204 Follow these alternate entry procedures for permit-required confined spaces.
296-307-654 Nonpermit confined spaces requirements.
296-307-65402 Follow these requirements when classifying a confined space as a nonpermit confined space.
296-307-65404 Reevaluate nonpermit confined spaces if hazards develop.
296-307-656 Definitions.

Part Y-10

Emergency Response

296-307-704 Scope.
296-307-70410 Planning.
296-307-70415 Training.
296-307-70420 Medical surveillance.
296-307-70425 Keep records.
296-307-70430 Incident requirements.
296-307-70435 Implement and maintain an incident command system (ICS).
296-307-70440 Prepare skilled support personnel.
296-307-70445 Make sure the incident commander oversees activities during the response.
296-307-70450 Use the buddy system in danger areas.
296-307-70455 Provide rescue and medical assistance.
296-307-70460 Personal protective equipment.
296-307-70465 Control hazards created by personal protective equipment (PPE).
296-307-70470 Use personal protective equipment (PPE) properly.
296-307-70475 Postemergency response.
296-307-70480 Definitions.

DISPOSITION OF SECTIONS FORMERLY CODIFIED IN THIS CHAPTER

296-307-015 What must an employer do if a serious injury occurs? [Statutory Authority: RCW 49.17.040. WSR 98-24-096, § 296-307-015, filed 12/1/98, effective 3/1/99. WSR 97-09-013, recodified as § 296-307-015, filed 4/7/97, effective 4/7/97. Statutory Authority: RCW 49.17.040, [49.17.]050 and [49.17.]060. WSR 96-22-048, § 296-306A-015, filed 10/31/96, effective 12/1/96.] Repealed by WSR 15-11-066, filed 5/19/15, effective 7/1/15. Statutory Authority: RCW 49.17.010, 49.17.040, and 49.17.050.

296-307-03910 Make sure first-aid training contains required subjects. [Statutory Authority: RCW 49.17.010, [49.17].040, and [49.17].050. WSR 01-17-033, § 296-307-03910, filed 8/8/01, effective 9/1/01.] Repealed by WSR 04-07-160, filed 3/23/04, effective 5/1/04. Statutory Authority: RCW 49.17.010, 49.17.040, 49.17.050, and 49.17.060.

296-307-03915 Document your first-aid training. [Statutory Authority: RCW 49.17.010, [49.17].040, and [49.17].050. WSR 01-17-033, § 296-307-03915, filed 8/8/01, effective 9/1/01.] Repealed by WSR 04-07-160, filed 3/23/04, effective 5/1/04. Statutory Authority: RCW 49.17.010, 49.17.040, 49.17.050, and 49.17.060.

296-307-03925 Provide a first-aid station when required. [Statutory Authority: RCW 49.17.010, [49.17].040, and [49.17].050. WSR 01-17-033, § 296-307-03925, filed 8/8/01, effective 9/1/01.] Repealed by WSR 04-07-160, filed 3/23/04, effective 5/1/04. Statutory Authority: RCW 49.17.010, 49.17.040, 49.17.050, and 49.17.060.

296-307-042 Must an employer provide first-aid kits? [WSR 97-09-013, recodified as § 296-307-042, filed 4/7/97, effective 4/7/97. Statutory Authority: RCW 49.17.040, [49.17.]-050 and [49.17.]060. WSR 96-22-048, § 296-306A-042, filed 10/31/96, effective 12/1/96.] Repealed by WSR 01-17-033, filed 8/8/01, effective 9/1/01. Statutory Authority: RCW 49.17.010, [49.17].040, and [49.17].-050.

296-307-14520 What are the department's recommendations for cholinesterase monitoring? (Nonmandatory) [WSR 97-09-013, recodified as § 296-307-14520, filed 4/7/97, effective 4/7/97. Statutory Authority: RCW 49.17.040, [49.17.]050 and [49.17.]060. WSR 96-22-048, § 296-306A-14520, filed 10/31/96, effective 12/1/96.] Repealed by WSR 03-24-105, filed 12/3/03, effective 2/1/04. Statutory Authority: RCW 49.17.010, 49.17.-040, 49.17.050, and 49.17.060.

296-307-160 Temporary labor camps. [WSR 97-09-013, recodified as § 296-307-160, filed 4/7/97, effective 4/7/97. Statutory Authority: RCW 49.17.040, [49.17.]050 and [49.17.]-060. WSR 96-22-048, § 296-306A-160, filed 10/31/96, effective 12/1/96.] Repealed by WSR 00-06-081, filed 3/1/00, effective 3/1/00. Statutory Authority: RCW 49.17.010, [49.17].040, and [49.17].050 and 1999 c 374.

296-307-16001 What requirements apply to camp sites? [Statutory Authority: RCW 49.17.040. WSR 98-24-096, § 296-307-16001, filed 12/1/98, effective 3/1/99. WSR 97-09-013, recodified as § 296-307-16001, filed 4/7/97, effective 4/7/97. Statutory Authority: RCW 49.17.040, [49.17.]050 and [49.17.]060. WSR 96-22-048, § 296-306A-16001, filed 10/31/96, effective 12/1/96.] Repealed by WSR 00-06-081, filed 3/1/00, effective 3/1/00. Statutory Authority: RCW 49.17.010, [49.17].-040, and [49.17].050 and 1999 c 374.

296-307-16003 How must camp shelters be constructed? [Statutory Authority: RCW 49.17.040. WSR 98-24-096, § 296-307-16003, filed 12/1/98, effective 3/1/99. WSR 97-09-013, recodified as § 296-307-16003, filed 4/7/97, effective 4/7/97. Statutory Authority: RCW 49.17.040, [49.17.]050 and [49.17.]060. WSR 97-08-051A, § 296-306A-16003, filed 3/31/97, effective 5/1/97; WSR 96-22-048, § 296-306A-16003, filed 10/31/96, effective 12/1/96.] Repealed by WSR 00-06-081, filed 3/1/00, effective 3/1/00. Statutory Authority: RCW 49.17.010, [49.17].040, and [49.17].050 and 1999 c 374.

296-307-16004 What electricity must be provided for temporary labor camps? [Statutory Authority: RCW 49.17.040. WSR 98-24-096, § 296-307-16004, filed 12/1/98, effective 3/1/99.] Repealed by WSR 00-06-081, filed 3/1/00, effective 3/1/00. Statutory Authority: RCW 49.17.010, [49.17].040, and [49.17].050 and 1999 c 374.

296-307-16005 What requirements apply to the water supply? [WSR 97-09-013, recodified as § 296-307-16005, filed 4/7/97, effective 4/7/97. Statutory Authority: RCW 49.17.040, [49.17.]050 and [49.17.]060. WSR 96-22-048, § 296-306A-16005, filed 10/31/96, effective 12/1/96.] Repealed by WSR 00-06-081, filed 3/1/00, effective 3/1/00. Statutory Authority: RCW 49.17.010, [49.17].-040, and [49.17].050 and 1999 c 374.

296-307-16007 Must an employer provide toilet facilities for the camp? [WSR 97-09-013, recodified as § 296-307-16007, filed 4/7/97, effective 4/7/97. Statutory Authority: RCW 49.17.040, [49.17.]050 and [49.17.]060. WSR 96-22-048, § 296-306A-16007, filed 10/31/96, effective 12/1/96.] Repealed by WSR 00-06-081, filed 3/1/00,

effective 3/1/00. Statutory Authority: RCW 49.17.010, [49.17].040, and [49.17].050 and 1999 c 374.

296-307-16009 Must sewer lines connect to public sewers? [WSR 97-09-013, recodified as § 296-307-16009, filed 4/7/97, effective 4/7/97. Statutory Authority: RCW 49.17.040, [49.17.]050 and [49.17.]060. WSR 96-22-048, § 296-306A-16009, filed 10/31/96, effective 12/1/96.] Repealed by WSR 00-06-081, filed 3/1/00, effective 3/1/00. Statutory Authority: RCW 49.17.010, [49.17].-040, and [49.17].050 and 1999 c 374.

296-307-16011 What facilities must an employer provide for laundry, handwashing, and bathing? [WSR 97-09-013, recodified as § 296-307-16011, filed 4/7/97, effective 4/7/97. Statutory Authority: RCW 49.17.040, [49.17.]050 and [49.17.]060. WSR 96-22-048, § 296-306A-16011, filed 10/31/96, effective 12/1/96.] Repealed by WSR 00-06-081, filed 3/1/00, effective 3/1/00. Statutory Authority: RCW 49.17.010, [49.17].040, and [49.17].050 and 1999 c 374.

296-307-16013 What lighting must an employer provide in camp buildings? [Statutory Authority: RCW 49.17.040. WSR 98-24-096, § 296-307-16013, filed 12/1/98, effective 3/1/99. WSR 97-09-013, recodified as § 296-307-16013, filed 4/7/97, effective 4/7/97. Statutory Authority: RCW 49.17.040, [49.17.]050 and [49.17.]060. WSR 97-08-051A, § 296-306A-16013, filed 3/31/97, effective 5/1/97; WSR 96-22-048, § 296-306A-16013, filed 10/31/96, effective 12/1/96.] Repealed by WSR 00-06-081, filed 3/1/00, effective 3/1/00. Statutory Authority: RCW 49.17.010, [49.17].040, and [49.17].050 and 1999 c 374.

296-307-16015 What requirements apply to refuse disposal? [WSR 97-09-013, recodified as § 296-307-16015, filed 4/7/97, effective 4/7/97. Statutory Authority: RCW 49.17.040, [49.17.]050 and [49.17.]060. WSR 96-22-048, § 296-306A-16015, filed 10/31/96, effective 12/1/96.] Repealed by WSR 00-06-081, filed 3/1/00, effective 3/1/00. Statutory Authority: RCW 49.17.010, [49.17].-040, and [49.17].050 and 1999 c 374.

296-307-16017 What cooking and food-handling facilities must be provided in temporary labor camps? [Statutory Authority: RCW 49.17.040. WSR 98-24-096, § 296-307-16017, filed 12/1/98, effective 3/1/99. WSR 97-09-013, recodified as § 296-307-16017, filed 4/7/97, effective 4/7/97. Statutory Authority: RCW 49.17.040, [49.17.]050 and [49.17.]060. WSR 96-22-048, § 296-306A-16017, filed 10/31/96, effective 12/1/96.] Repealed by WSR 00-06-081, filed 3/1/00, effective 3/1/00. Statutory Authority: RCW 49.17.010, [49.17].040, and [49.17].050 and 1999 c 374.

296-307-16019 Must an employer provide insect and rodent control? [WSR 97-09-013, recodified as § 296-307-16019, filed 4/7/97, effective 4/7/97. Statutory Authority: RCW 49.17.040, [49.17.]050 and [49.17.]060. WSR 96-22-048, § 296-306A-16019, filed 10/31/96, effective 12/1/96.] Repealed by WSR 00-06-081, filed 3/1/00, effective 3/1/00. Statutory Authority: RCW 49.17.010, [49.17].040, and [49.17].050 and 1999 c 374.

296-307-16021 What first-aid facilities must be available in the camp? [WSR 97-09-013, recodified as § 296-307-16021, filed 4/7/97, effective 4/7/97. Statutory Authority: RCW 49.17.040, [49.17.]050 and [49.17.]060. WSR 96-22-048, § 296-306A-16021, filed 10/31/96, effective 12/1/96.] Repealed by WSR 00-06-081, filed 3/1/00, effective 3/1/00. Statutory Authority: RCW 49.17.010, [49.17].040, and [49.17].050 and 1999 c 374.

296-307-16023 When must an employer report communicable diseases in a camp? [WSR 97-09-013, recodified as § 296-307-16023, filed 4/7/97, effective 4/7/97. Statutory Authority: RCW 49.17.040, [49.17.]050 and [49.17.]060. WSR 96-22-048, § 296-306A-16023, filed 10/31/96, effective 12/1/96.] Repealed by WSR 00-06-081, filed 3/1/00, effective 3/1/00. Statutory Authority: RCW 49.17.010, [49.17].040, and [49.17].050 and 1999 c 374.

296-307-16105 Operating license. [Statutory Authority: RCW 49.17.-010, [49.17].040, and [49.17].050 and 1999 c 374. WSR 00-06-081, § 296-307-16105, filed 3/1/00, effective 3/1/00.] Repealed by WSR 15-13-092, filed 6/15/15, effective 1/1/16. Statutory Authority: RCW 49.17.010, 49.17.040, 49.17.050, and 49.17.060.

296-307-16110 Requirements for self-survey program. [Statutory Authority: RCW 49.17.010, [49.17].040, and [49.17].050 and 1999 c 374. WSR 00-06-081, § 296-307-16110, filed 3/1/00, effective 3/1/00.] Repealed by WSR 15-13-092, filed 6/15/15, effective 1/1/16. Statutory Authority: RCW 49.17.010, 49.17.040, 49.17.050, and 49.17.060.

296-307-163 Cherry harvest camps. [Statutory Authority: RCW 49.17.010, [49.17].040, and [49.17].050 and 1999 c 374. WSR 00-06-081, § 296-307-163, filed 3/1/00, effective 3/1/00.] Repealed by WSR 15-13-092, filed 6/15/15, effective 1/1/16. Statutory Authority: RCW 49.17.010, 49.17.040, 49.17.050, and 49.17.060.

296-307-16301 Purpose and applicability. [Statutory Authority: RCW 49.17.010, [49.17].040, and [49.17].050 and 1999 c 374. WSR 00-06-081, § 296-307-16301, filed 3/1/00, effective 3/1/00.] Repealed by WSR 15-13-092, filed 6/15/15, effective 1/1/16. Statutory Authority: RCW 49.17.010, 49.17.040, 49.17.050, and 49.17.060.

296-307-16303 Definitions. [Statutory Authority: RCW 49.17.010, [49.17].040, [49.17].050, and [49.17].060. WSR 02-23-072, § 296-307-16303, filed 11/19/02, effective 1/1/03. Statutory Authority: RCW 49.17.010, [49.17].040, and [49.17].050 and 1999 c 374. WSR 00-06-081, § 296-307-16303, filed 3/1/00, effective 3/1/00.] Repealed by WSR 15-13-092, filed 6/15/15, effective 1/1/16. Statutory Authority: RCW 49.17.010, 49.17.040, 49.17.050, and 49.17.060.

296-307-16305 Technical assistance. [Statutory Authority: RCW 49.17.010, [49.17].040, and [49.17].050 and 1999 c 374. WSR 00-06-081, § 296-307-16305, filed 3/1/00, effective 3/1/00.] Repealed by WSR 15-13-092, filed 6/15/15, effective 1/1/16. Statutory Authority: RCW 49.17.010, 49.17.040, 49.17.050, and 49.17.060.

296-307-16310 Operating license. [Statutory Authority: RCW 49.17.-010, [49.17].040, [49.17].050, and [49.17].060. WSR 02-23-072, § 296-307-16310, filed 11/19/02, effective 1/1/03. Statutory Authority: RCW 49.17.010, [49.17].-040, and [49.17].050 and 1999 c 374. WSR 00-06-081, § 296-307-16310, filed 3/1/00, effective 3/1/00.] Repealed by WSR 15-13-092, filed 6/15/15, effective 1/1/16. Statutory Authority: RCW 49.17.010, 49.17.-040, 49.17.050, and 49.17.060.

296-307-16315 Maximum camp occupancy. [Statutory Authority: RCW 49.17.010, [49.17].040, and [49.17].050 and 1999 c 374. WSR 00-06-081, § 296-307-16315, filed 3/1/00, effective 3/1/00.] Repealed by WSR 15-13-092, filed 6/15/15, effective 1/1/16. Statutory Authority: RCW 49.17.010, 49.17.040, 49.17.050, and 49.17.060.

296-307-16320 Variance and procedure. [Statutory Authority: RCW 49.17.010, [49.17].040, and [49.17].050 and 1999 c 374. WSR 00-06-081, § 296-307-16320, filed 3/1/00, effective 3/1/00.] Repealed by WSR 15-13-092, filed 6/15/15, effective 1/1/16. Statutory Authority: RCW 49.17.010, 49.17.040, 49.17.050, and 49.17.060.

296-307-16325 Cherry harvest campsites. [Statutory Authority: RCW 49.17.010, [49.17].040, and [49.17].050 and 1999 c 374. WSR 00-06-081, § 296-307-16325, filed 3/1/00, effective 3/1/00.] Repealed by WSR 15-13-092, filed 6/15/15, effective 1/1/16. Statutory Authority: RCW 49.17.010, 49.17.040, 49.17.050, and 49.17.060.

296-307-16330 Water supply. [Statutory Authority: RCW 49.17.010, [49.17].040, and [49.17].050 and 1999 c 374. WSR 00-06-081, § 296-307-16330, filed 3/1/00, effective 3/1/00.] Repealed by WSR 15-13-092, filed 6/15/15, effective 1/1/16. Statutory Authority: RCW 49.17.010, 49.17.040, 49.17.050, and 49.17.060.

296-307-16335 Sewage disposal. [Statutory Authority: RCW 49.17.-010, [49.17].040, and [49.17].050 and 1999 c 374. WSR 00-06-081, § 296-307-16335, filed 3/1/00, effective 3/1/00.] Repealed by WSR 15-13-092, filed 6/15/15, effective 1/1/16. Statutory Authority: RCW 49.17.010, 49.17.040, 49.17.050, and 49.17.060.

296-307-16340 Electricity and lighting. [Statutory Authority: RCW 49.17.010, 49.17.040, 49.17.050, 49.17.060. WSR 05-01-166, § 296-307-16340, filed 12/21/04, effective 4/2/05. Statutory Authority: RCW 49.17.010, [49.17].040, and [49.17].050 and 1999 c 374. WSR 00-06-081, § 296-307-16340, filed 3/1/00, effective 3/1/00.] Repealed by WSR 15-13-092, filed 6/15/15, effective 1/1/16. Statutory Authority: RCW 49.17.010, 49.17.040, 49.17.050, and 49.17.060.

296-307-16345 Tents. [Statutory Authority: RCW 49.17.010, [49.17].-040, and [49.17].050 and 1999 c 374. WSR 00-06-081, § 296-307-16345, filed 3/1/00, effective 3/1/00.] Repealed by WSR 15-13-092, filed 6/15/15, effective 1/1/16. Statutory Authority: RCW 49.17.010, 49.17.-040, 49.17.050, and 49.17.060.

296-307-16350 Recreational vehicles. [Statutory Authority: RCW 49.17.010, [49.17].040, and [49.17].050 and 1999 c 374. WSR 00-06-081, § 296-307-16350, filed 3/1/00, effective 3/1/00.] Repealed by WSR 15-13-092, filed 6/15/15, effective 1/1/16. Statutory Authority: RCW 49.17.010, 49.17.040, 49.17.050, and 49.17.060.

296-307-16355 Laundry facilities. [Statutory Authority: RCW 49.17.010, [49.17].040, and [49.17].050 and 1999 c 374. WSR 00-06-081, § 296-307-16355, filed 3/1/00, effective 3/1/00.] Repealed by WSR 15-13-092, filed 6/15/15, effective 1/1/16. Statutory Authority: RCW 49.17.010, 49.17.040, 49.17.050, and 49.17.060.

296-307-16360 Handwashing and bathing facilities. [Statutory Authority: RCW 49.17.010, [49.17].040, and [49.17].050 and 1999 c 374. WSR 00-06-081, § 296-307-16360, filed 3/1/00, effective 3/1/00.] Repealed by WSR 15-13-092, filed 6/15/15, effective 1/1/16. Statutory Authority: RCW 49.17.010, 49.17.040, 49.17.050, and 49.17.060.

296-307-16365 Toilet facilities. [Statutory Authority: RCW 49.17.010, [49.17].040, and [49.17].050 and 1999 c 374. WSR 00-06-081, § 296-307-16365, filed 3/1/00, effective 3/1/00.] Repealed by WSR 15-13-092, filed 6/15/15, effective 1/1/16. Statutory Authority: RCW 49.17.010, 49.17.040, 49.17.050, and 49.17.060.

296-307-16370 Cooking and food-handling facilities. [Statutory Authority: RCW 49.17.010, [49.17].040, and [49.17].050 and 1999 c 374. WSR 00-06-081, § 296-307-16370, filed 3/1/00, effective 3/1/00.] Repealed by WSR 15-13-092, filed 6/15/15, effective 1/1/16. Statutory Authority: RCW 49.17.010, 49.17.040, 49.17.050, and 49.17.060.

296-307-16375 Cots, beds, bedding, and personal storage. [Statutory Authority: RCW 49.17.010, [49.17].040, and [49.17].050 and 1999 c 374. WSR 00-06-081, § 296-307-16375, filed 3/1/00, effective 3/1/00.] Repealed by WSR 15-13-092, filed 6/15/15, effective 1/1/16. Statutory Authority: RCW 49.17.010, 49.17.040, 49.17.050, and 49.17.060.

296-307-16380 First aid and safety. [Statutory Authority: RCW 49.17.010, [49.17].040, and [49.17].050 and 1999 c 374. WSR 00-06-081, § 296-307-16380, filed 3/1/00, effective 3/1/00.] Repealed by WSR 15-13-092, filed 6/15/15, effective 1/1/16. Statutory Authority: RCW 49.17.010, 49.17.040, 49.17.050, and 49.17.060.

296-307-16385 Refuse disposal. [Statutory Authority: RCW 49.17.010, [49.17].040, and [49.17].050 and 1999 c 374. WSR 00-06-081, § 296-307-16385, filed 3/1/00, effective 3/1/00.] Repealed by WSR 15-13-092, filed 6/15/15, effective 1/1/16. Statutory Authority: RCW 49.17.010, 49.17.040, 49.17.050, and 49.17.060.

296-307-16390 Insect and rodent control. [Statutory Authority: RCW 49.17.010, [49.17].040, and [49.17].050 and 1999 c 374. WSR 00-06-081, § 296-307-16390, filed 3/1/00, effective 3/1/00.] Repealed by WSR 15-13-092, filed 6/15/15, effective 1/1/16. Statutory Authority: RCW 49.17.010, 49.17.040, 49.17.050, and 49.17.060.

296-307-16395 Disease prevention and control. [Statutory Authority: RCW 49.17.010, [49.17].040, and [49.17].050 and 1999 c 374. WSR 00-06-081, § 296-307-16395, filed 3/1/00, effective 3/1/00.] Repealed by WSR 15-13-092, filed 6/15/15, effective 1/1/16. Statutory Authority: RCW 49.17.010, 49.17.040, 49.17.050, and 49.17.060.

296-307-28008 What training must an employer provide for employees who use agricultural equipment? [WSR 97-09-013, recodified as § 296-307-28008, filed 4/7/97, effective 4/7/97. Statutory Authority: RCW 49.17.040, [49.17.]050 and [49.17.]060. WSR 96-22-048, § 296-306A-28008, filed 10/31/96, effective 12/1/96.] Repealed by WSR 98-24-096, filed 12/1/98, effective 3/1/99. Statutory Authority: RCW 49.17.040.

296-307-28010 What requirements apply to machine controls? [WSR 97-09-013, recodified as § 296-307-28010, filed 4/7/97, effective 4/7/97. Statutory Authority: RCW 49.17.040, [49.17.]050 and [49.17.]060. WSR 96-22-048, § 296-306A-28010, filed 10/31/96, effective 12/1/96.] Repealed by WSR 98-24-096, filed 12/1/98, effective 3/1/99. Statutory Authority: RCW 49.17.040.

296-307-28012 What requirements apply to guarding steam pipes? [WSR 97-09-013, recodified as § 296-307-28012, filed 4/7/97, effective 4/7/97. Statutory Authority: RCW 49.17.040, [49.17.]050 and [49.17.]060. WSR 96-22-048, § 296-306A-28012, filed 10/31/96, effective 12/1/96.] Repealed by WSR 98-24-096, filed 12/1/98, effective 3/1/99. Statutory Authority: RCW 49.17.040.

296-307-45001 What general requirements apply to hazardous materials and flammable and combustible liquids? [Statutory Authority: RCW 49.17.040. WSR 98-24-096, § 296-307-45001, filed 12/1/98, effective 3/1/99. WSR 97-09-013, recodified as § 296-307-45001, filed 4/7/97, effective 4/7/97. Statutory Authority: RCW 49.17.040, [49.17.]050 and [49.17.]060. WSR 96-22-048, § 296-306A-45001, filed 10/31/96, effective 12/1/96.] Repealed by WSR 03-10-068, filed 5/6/03, effective 8/1/03. Statutory Authority: RCW 49.17.010, 49.17.040, 49.17.050, and 49.17.060. Later promulgation, see WAC 296-307-445 through 296-307-465.

296-307-45003 What requirements apply to dip tanks containing flammable or combustible liquids? [Statutory Authority: RCW 49.17.040. WSR 98-24-096, § 296-307-45003, filed 12/1/98, effective 3/1/99. WSR 97-09-013, recodified as § 296-307-45003, filed 4/7/97, effective 4/7/97. Statutory Authority: RCW 49.17.040, [49.17.]050 and [49.17.]060. WSR 96-22-048, § 296-306A-45003, filed 10/31/96, effective 12/1/96.] Repealed by WSR 03-10-068, filed 5/6/03, effective 8/1/03. Statutory Authority: RCW 49.17.010, 49.17.040, 49.17.050, and 49.17.060. Later promulgation, see WAC 296-307-445 through 296-307-465.

296-307-45007 What requirements must ventilation systems meet? [WSR 97-09-013, recodified as § 296-307-45007, filed 4/7/97, effective 4/7/97. Statutory Authority: RCW 49.17.040, [49.17.]050 and [49.17.]060. WSR 96-22-048, § 296-306A-45007, filed 10/31/96, effective 12/1/96.] Repealed by WSR 03-10-068, filed 5/6/03, effective 8/1/03. Statutory Authority: RCW 49.17.010, 49.17.040, 49.17.050, and 49.17.060. Later promulgation, see WAC 296-307-445 through 296-307-465.

296-307-45009 What general requirements apply to the construction of dip tanks? [Statutory Authority: RCW 49.17.040. WSR 98-24-096, § 296-307-45009, filed 12/1/98, effective 3/1/99. WSR 97-09-013, recodified as § 296-307-45009, filed 4/7/97, effective 4/7/97. Statutory Authority: RCW 49.17.040, [49.17.]050 and [49.17.]060. WSR 96-22-048, § 296-306A-45009, filed 10/31/96, effective 12/1/96.] Repealed by WSR 03-10-068, filed 5/6/03, effective 8/1/03. Statutory Authority: RCW 49.17.010, 49.17.040, 49.17.050, and 49.17.060. Later promulgation, see WAC 296-307-445 through 296-307-465.

296-307-45011 How must overflow pipes for dip tanks be constructed? [WSR 97-09-013, recodified as § 296-307-45011, filed 4/7/97, effective 4/7/97. Statutory Authority: RCW 49.17.040, [49.17.]050 and [49.17.]060. WSR 96-22-048, § 296-306A-45011, filed 10/31/96, effective 12/1/96.] Repealed by WSR 03-10-068, filed 5/6/03, effective 8/1/03. Statutory Authority: RCW 49.17.010, 49.17.040, 49.17.050, and 49.17.060. Later promulgation, see WAC 296-307-445 through 296-307-465.

296-307-45013 How must the bottom drains of dip tanks be constructed? [WSR 97-09-013, recodified as § 296-307-45013, filed 4/7/97, effective 4/7/97. Statutory Authority: RCW 49.17.040, [49.17.]050 and [49.17.]060. WSR 96-22-048, § 296-306A-45013, filed 10/31/96, effective 12/1/96.] Repealed by WSR 03-10-068, filed 5/6/03, effective 8/1/03. Statutory Authority: RCW 49.17.010, 49.17.040, 49.17.050, and 49.17.060. Later promulgation, see WAC 296-307-445 through 296-307-465.

296-307-45017 What measures must an employer take to prevent hazards from electrical and other ignition sources? [Statutory Authority: RCW 49.17.040. WSR 98-24-096, § 296-307-45017, filed 12/1/98, effective 3/1/99. WSR 97-09-013, recodified as § 296-307-45017, filed 4/7/97, effective 4/7/97. Statutory Authority: RCW 49.17.040, [49.17.]050 and [49.17.]060. WSR 96-22-048, § 296-306A-45017, filed 10/31/96, effective 12/1/96.] Repealed by WSR 03-10-068, filed 5/6/03, effective 8/1/03. Statutory Authority: RCW 49.17.010, 49.17.040, 49.17.050, and 49.17.060. Later promulgation, see WAC 296-307-445 through 296-307-465.

296-307-45019 How must dip tanks be operated and maintained? [WSR 97-09-013, recodified as § 296-307-45019, filed 4/7/97, effective 4/7/97. Statutory Authority: RCW 49.17.040, [49.17.]050 and [49.17.]060. WSR 96-22-048, § 296-306A-45019, filed 10/31/96, effective 12/1/96.] Repealed by WSR 03-10-068, filed 5/6/03, effective 8/1/03. Statutory Authority: RCW 49.17.010, 49.17.040, 49.17.050, and 49.17.060. Later promulgation, see WAC 296-307-445 through 296-307-465.

296-307-45021 What requirements must fire extinguishing systems meet? [Statutory Authority: RCW 49.17.040. WSR 98-24-096, § 296-307-45021, filed 12/1/98, effective

3/1/99. WSR 97-09-013, recodified as § 296-307-45021, filed 4/7/97, effective 4/7/97. Statutory Authority: RCW 49.17.040, [49.17.]050 and [49.17.]060. WSR 96-22-048, § 296-306A-45021, filed 10/31/96, effective 12/1/96.] Repealed by WSR 03-10-068, filed 5/6/03, effective 8/1/03. Statutory Authority: RCW 49.17.010, 49.17.040, 49.17.050, and 49.17.060. Later promulgation, see WAC 296-307-445 through 296-307-465.

296-307-45023 What requirements apply to hardening and tempering tanks? [Statutory Authority: RCW 49.17.040. WSR 98-24-096, § 296-307-45023, filed 12/1/98, effective 3/1/99. WSR 97-09-013, recodified as § 296-307-45023, filed 4/7/97, effective 4/7/97. Statutory Authority: RCW 49.17.040, [49.17.]050 and [49.17.]060. WSR 96-22-048, § 296-306A-45023, filed 10/31/96, effective 12/1/96.] Repealed by WSR 03-10-068, filed 5/6/03, effective 8/1/03. Statutory Authority: RCW 49.17.010, 49.17.040, 49.17.050, and 49.17.060. Later promulgation, see WAC 296-307-445 through 296-307-465.

296-307-45027 What requirements apply to electrostatic apparatus? [Statutory Authority: RCW 49.17.040. WSR 98-24-096, § 296-307-45027, filed 12/1/98, effective 3/1/99. WSR 97-09-013, recodified as § 296-307-45027, filed 4/7/97, effective 4/7/97. Statutory Authority: RCW 49.17.040, [49.17.]050 and [49.17.]060. WSR 96-22-048, § 296-306A-45027, filed 10/31/96, effective 12/1/96.] Repealed by WSR 03-10-068, filed 5/6/03, effective 8/1/03. Statutory Authority: RCW 49.17.010, 49.17.040, 49.17.050, and 49.17.060. Later promulgation, see WAC 296-307-445 through 296-307-465.

296-307-45029 What requirements apply to roll coating applications? [WSR 97-09-013, recodified as § 296-307-45029, filed 4/7/97, effective 4/7/97. Statutory Authority: RCW 49.17.040, [49.17.]050 and [49.17.]060. WSR 96-22-048, § 296-306A-45029, filed 10/31/96, effective 12/1/96.] Repealed by WSR 03-10-068, filed 5/6/03, effective 8/1/03. Statutory Authority: RCW 49.17.010, 49.17.040, 49.17.050, and 49.17.060. Later promulgation, see WAC 296-307-445 through 296-307-465.

296-307-452 Scope. [Statutory Authority: RCW 49.17.010, [49.17].040, and [49.17].050. WSR 02-11-141, § 296-307-452, filed 5/22/02, effective 10/1/02.] Repealed by WSR 05-01-166, filed 12/21/04, effective 4/2/05. Statutory Authority: RCW 49.17.010, 49.17.040, 49.17.050, 49.17.060. Later promulgation, see chapter 296-307 WAC, Part Y-10.

296-307-45210 Planning. [Statutory Authority: RCW 49.17.010, [49.17].040, and [49.17].050. WSR 02-11-141, § 296-307-45210, filed 5/22/02, effective 10/1/02.] Repealed by WSR 05-01-166, filed 12/21/04, effective 4/2/05. Statutory Authority: RCW 49.17.010, 49.17.040, 49.17.050, 49.17.060. Later promulgation, see chapter 296-307 WAC, Part Y-10.

296-307-45220 Training. [Statutory Authority: RCW 49.17.010, [49.17].040, and [49.17].050. WSR 02-11-141, § 296-307-45220, filed 5/22/02, effective 10/1/02.] Repealed by WSR 05-01-166, filed 12/21/04, effective 4/2/05. Statutory Authority: RCW 49.17.010, 49.17.040, 49.17.050, 49.17.060. Later promulgation, see chapter 296-307 WAC, Part Y-10.

296-307-45230 Medical surveillance. [Statutory Authority: RCW 49.17.010, [49.17].040, and [49.17].050. WSR 02-11-141, § 296-307-45230, filed 5/22/02, effective 10/1/02.] Repealed by WSR 05-01-166, filed 12/21/04, effective 4/2/05. Statutory Authority: RCW 49.17.010, 49.17.040, 49.17.050, 49.17.060. Later promulgation, see chapter 296-307 WAC, Part Y-10.

296-307-45240 Keep records. [Statutory Authority: RCW 49.17.010, [49.17].040, and [49.17].050. WSR 02-11-141, § 296-307-45240, filed 5/22/02, effective 10/1/02.] Repealed by WSR 05-01-166, filed 12/21/04, effective 4/2/05. Statutory Authority: RCW 49.17.010, 49.17.040, 49.17.050, 49.17.060. Later promulgation, see chapter 296-307 WAC, Part Y-10.

296-307-45400 Incident requirements. [Statutory Authority: RCW 49.17.010, [49.17].040, and [49.17].050. WSR 02-11-141, § 296-307-45400, filed 5/22/02, effective 10/1/02.] Repealed by WSR 05-01-166, filed 12/21/04, effective 4/2/05. Statutory Authority: RCW 49.17.010, 49.17.040, 49.17.050, 49.17.060. Later promulgation, see chapter 296-307 WAC, Part Y-10.

296-307-45410 Implement and maintain an incident command system (ICS). [Statutory Authority: RCW 49.17.010, [49.17].040, and [49.17].050. WSR 02-11-141, § 296-307-45410, filed 5/22/02, effective 10/1/02.] Repealed by WSR 05-01-166, filed 12/21/04, effective 4/2/05. Statutory Authority: RCW 49.17.010, 49.17.040, 49.17.050, 49.17.060. Later promulgation, see chapter 296-307 WAC, Part Y-10.

296-307-45420 Prepare skilled support personnel. [Statutory Authority: RCW 49.17.010, [49.17].040, and [49.17].050. WSR 02-11-141, § 296-307-45420, filed 5/22/02, effective 10/1/02.] Repealed by WSR 05-01-166, filed 12/21/04, effective 4/2/05. Statutory Authority: RCW 49.17.010, 49.17.040, 49.17.050, 49.17.060. Later promulgation, see chapter 296-307 WAC, Part Y-10.

296-307-45430 Make sure the incident commander oversees activities during the response. [Statutory Authority: RCW 49.17.010, [49.17].040, and [49.17].050. WSR 02-11-141, § 296-307-45430, filed 5/22/02, effective 10/1/02.] Repealed by WSR 05-01-166, filed 12/21/04, effective 4/2/05. Statutory Authority: RCW 49.17.010, 49.17.040, 49.17.050, 49.17.060. Later promulgation, see chapter 296-307 WAC, Part Y-10.

296-307-45440 Use the buddy system in danger areas. [Statutory Authority: RCW 49.17.010, [49.17].040, and [49.17].050. WSR 02-11-141, § 296-307-45440, filed 5/22/02, effective 10/1/02.] Repealed by WSR 05-01-166, filed 12/21/04, effective 4/2/05. Statutory Authority: RCW 49.17.010, 49.17.040, 49.17.050, 49.17.060. Later promulgation, see chapter 296-307 WAC, Part Y-10.

296-307-45450 Provide rescue and medical assistance. [Statutory Authority: RCW 49.17.010, [49.17].040, and [49.17].050. WSR 02-11-141, § 296-307-45450, filed 5/22/02, effective 10/1/02.] Repealed by WSR 05-01-166, filed 12/21/04, effective 4/2/05. Statutory Authority: RCW 49.17.010, 49.17.040, 49.17.050, 49.17.060. Later promulgation, see chapter 296-307 WAC, Part Y-10.

296-307-45600 Personal protective equipment. [Statutory Authority: RCW 49.17.010, [49.17].040, and [49.17].050. WSR 02-11-141, § 296-307-45600, filed 5/22/02, effective 10/1/02.] Repealed by WSR 05-01-166, filed 12/21/04, effective 4/2/05. Statutory Authority: RCW 49.17.010, 49.17.040, 49.17.050, 49.17.060. Later promulgation, see chapter 296-307 WAC, Part Y-10.

296-307-45610 Control hazards created by personal protective equipment (PPE). [Statutory Authority: RCW 49.17.010, [49.17].040, and [49.17].050. WSR 02-11-141, § 296-307-45610, filed 5/22/02, effective 10/1/02.] Repealed by WSR 05-01-166, filed 12/21/04, effective 4/2/05. Statutory Authority: RCW 49.17.010, 49.17.040, 49.17.050, 49.17.060. Later promulgation, see chapter 296-307 WAC, Part Y-10.

296-307-45620 Use personal protective equipment (PPE) properly. [Statutory Authority: RCW 49.17.010, [49.17].040, and [49.17].050. WSR 02-11-141, § 296-307-45620, filed 5/22/02, effective 10/1/02.] Repealed by WSR 05-01-166, filed 12/21/04, effective 4/2/05. Statutory Authority: RCW 49.17.010, 49.17.040, 49.17.050, 49.17.060. Later promulgation, see chapter 296-307 WAC, Part Y-10.

296-307-45800 Postemergency response. [Statutory Authority: RCW 49.17.010, [49.17].040, and [49.17].050. WSR 02-11-141, § 296-307-45800, filed 5/22/02, effective 10/1/02.] Repealed by WSR 05-01-166, filed 12/21/04, effective 4/2/05. Statutory Authority: RCW 49.17.010, 49.17.040, 49.17.050, 49.17.060. Later promulgation, see chapter 296-307 WAC, Part Y-10.

296-307-46000 Definitions. [Statutory Authority: RCW 49.17.010, [49.17].040, and [49.17].050. WSR 02-11-141, § 296-307-46000, filed 5/22/02, effective 10/1/02.] Repealed by WSR 05-01-166, filed 12/21/04, effective 4/2/05. Statutory Authority: RCW 49.17.010, 49.17.040, 49.17.050, 49.17.060. Later promulgation, see chapter 296-307 WAC, Part Y-10.

296-307-59010 Control tobacco smoke that comes in from the outside. [Statutory Authority: RCW 49.17.010, [49.17].040, and [49.17].050. WSR 01-17-033, § 296-307-59010, filed 8/8/01, effective 9/1/01.] Repealed by WSR 06-22-023, filed 10/24/06, effective 12/1/06. Statutory Authority: RCW 49.17.010, 49.17.040, 49.17.050, 49.17.060.

FIELD OPERATIONS AND GENERAL REQUIREMENTS

Part A

General and Educational Requirements

WAC 296-307-003 How is this chapter divided? The first three digits of the WAC (296) are the title. The second three digits are the chapter (307). The third number group is the section, which may have three or five digits. The fourth and fifth digits are treated as if there were a decimal point after the third digit.

For example: Section 330 of this chapter includes all five-digit sections whose number begins with 330.

Sections may be further divided as indicated below.

Title-Chapter-Section	296-307-330
	296-307-33003
Subsection	(1)
	(2)
Subdivision	(a)
	(b)
Item	(i)
	(ii)

Note: The chapter is also divided into "parts" according to subject, to make it easier for you to find the information you need.

[Statutory Authority: RCW 49.17.040. WSR 98-24-096, § 296-307-003, filed 12/1/98, effective 3/1/99. WSR 97-09-013, recodified as § 296-307-003, filed 4/7/97, effective 4/7/97. Statutory Authority: RCW 49.17.040, [49.17.]050 and [49.17.]060. WSR 96-22-048, § 296-306A-003, filed 10/31/96, effective 12/1/96.]

WAC 296-307-006 What does this chapter cover? (1) Chapter 296-307 WAC applies to all agricultural operations with one or more employees covered by the Washington Industrial Safety and Health Act (WISHA), chapter 49.17 RCW.

"Agricultural operations" means farming and ranching, including, but not limited to:

(a) Cultivating and tilling the soil;

(b) Dairy farming;

(c) Producing, cultivating, growing, and harvesting of any agricultural or horticultural commodity;

(d) Raising livestock, bees, fur-bearing animals, or poultry; and

(e) Any practices performed by a farmer or on a farm, incident to or in connection with such farming operations, including but not limited to preparation for market and delivery to:

(i) Storage;

(ii) Market; or

(iii) Carriers for transportation to market. Agricultural operations include, but are not limited to, all employers in one or more of the following standard industrial classification (SIC) codes:

0111 Wheat

0115 Corn

0119 Cash grains not elsewhere classified, barley, peas, lentils, oats, etc.

0133 Sugar cane and sugar beets

0134 Irish potatoes—all potatoes except yams

0139 Field crops—hay, hops, mint, etc.

0161 Vegetables and melons, all inclusive

0171 All berry crops

0172 Grapes

0173 Tree nuts

0175 Deciduous tree fruits

0179 Tree fruits or tree nuts not elsewhere classified

0181 Ornamental floriculture and nursery products

0182 Food crops grown under cover

0191 General farms, primarily crops

0211 Beef cattle feedlots

0212 Beef cattle except feedlots—cattle ranches

0213 Hogs

0214 Sheep and goats

0219 General livestock except dairy and poultry

0241 Dairy farms

0251 Broiler, fryer, and roaster chickens

0252 Chicken eggs

0253 Turkeys and turkey eggs

0254 Poultry hatcheries

0259 Poultry and eggs not elsewhere classified

0271 Fur bearing animals and rabbits

0272 Horses

0273 Animal aquaculture

0279 Animal specialties not elsewhere classified

0291 General farms, primarily livestock and animal specialties

0711 Soil preparation services

0721 Crop planting, cultivating, and protecting

0722 Crop harvesting, primarily by machine

0751 Livestock services, except veterinary

0761 Farm labor contractors

0811 Timber tracts, Christmas tree growing, tree farms

0831 Forest nurseries

0851 Forestry services—reforestation

"Agricultural operations" do not include a farmer's processing for sale or handling for sale a commodity or product grown or produced by a person other than the farmer or the farmer's employees.

(2) Chapter 296-24 WAC does not apply to agricultural operations.

(3) All agricultural operations are also covered by the requirements of chapter 296-62 WAC, General occupational health standards, and chapter 296-901 WAC, Globally harmonized system for hazard communication.

(4) Occasionally, employees engaged in agricultural operations may also be covered by the safety standards of other industries. Following are excerpts from four industry standards that may help you determine if these other standards also apply:

Chapter 296-54 WAC Safety standards—Logging operations

WAC 296-54-501 Scope and application.

This standard establishes safety practices, means, methods and operations for all types of logging, regardless of the end use of the wood. These types of activities include, but are not limited to, pulpwood and timber harvesting and the logging of sawlogs, veneer bolts, poles, pilings and other forest products. The requirements herein contained do not apply to log handling at sawmills, plywood mills, pulp mills or other manufacturing operations governed by their own specific safety standards.

Chapter 296-99 WAC Safety standards for grain handling facilities

WAC 296-99-015 What grain-handling operations does this chapter cover?

(1) WAC 296-99-010 through 296-99-070 apply to:

- Dry grinding operations of soycake;
- Dry grinding operations of soycake;
- Dust pelletizing plants;
- Feed mills;
- Flour mills;
- Flat storage structures;
- Grain elevators;
- Rice mills; and
- Soybean flaking operations.

(2) WAC 296-99-075, 296-99-080, and 296-99-085 apply only to grain elevators.

(3) Chapter 296-99 WAC does not apply to alfalfa storage or processing operations if they do not use grain products.

Chapter 296-78 WAC Safety standards for sawmills and woodworking operations

WAC 296-78-500 Foreword.

The chapter 296-78 WAC shall apply to and include safety requirements for all installations where the primary manufacturing of wood building products takes place. The installations may be a permanent fixed establishment or a portable operation. These operations shall include but are not limited to log and lumber handling, sawing, trimming and planing, plywood or veneer manufacturing, canting operations, waste or residual handling, operation of dry kilns, finishing, shipping, storage, yard and yard equipment, and for power tools and affiliated equipment used in connection with such operation. WAC 296-78-450 shall apply to shake and shingle manufacturing. The provisions of WAC 296-78-500 through 296-78-84011 are also applicable in shake and shingle manufacturing except in instances of conflict with the requirements of WAC 296-78-705.

Chapter 296-155 WAC Safety standards for construction work

WAC 296-155-005 Purpose and scope.

The standards included in this chapter apply throughout the state of Washington, to any and all work places subject to the Washington Industrial Safety and Health Act (chapter 49.17 RCW), where construction, alteration, demolition, related inspection, and/or maintenance and repair work, including painting and decorating, is performed. These standards are minimum safety requirements with which all industries must comply when engaged in the above listed types of work.

(5) If rules in this chapter conflict with rules in another chapter of Title 296 WAC, this chapter prevails.

[Statutory Authority: RCW 49.17.010, 49.17.040, 49.17.050, 49.17.060, and chapter 49.17 RCW. WSR 15-13-097, § 296-307-006, filed 6/16/15, effective 8/3/15. Statutory Authority: RCW 49.17.040. WSR 98-24-096, § 296-307-006, filed 12/1/98, effective 3/1/99. WSR 97-09-013, recodified as § 296-307-006, filed 4/7/97, effective 4/7/97. Statutory Authority: RCW 49.17.040, [49.17.]050 and [49.17.]060. WSR 96-22-048, § 296-306A-006, filed 10/31/96, effective 12/1/96.]

WAC 296-307-009 What definitions apply to this chapter? "Approved" means approved by the director of the department of labor and industries, or by another organization designated by the department. Also means listed or approved by a nationally recognized testing laboratory.

"Authorized person" means someone you have approved to perform specific duties or to be at a specific location on the job site.

"Biological agents" means organisms or their by-products.

"Chemical agents (airborne or contact)" means a chemical agent is any of the following:

• Airborne chemical agent which is any of the following:

- Dust - solid particles suspended in air, generated by handling, drilling, crushing, grinding, rapid impact, detonation, or decrepitation of organic or inorganic materials such as rock, ore, metal, coal, wood, grain, etc.

- Fume - solid particles suspended in air, generated by condensation from the gaseous state, generally after volatilization from molten metals, etc., and often accompanied by a chemical reaction such as oxidation.

- Gas - a normally formless fluid that can be changed to the liquid or solid state by the effect of increased pressure or decreased temperature or both.

- Mist - liquid droplets suspended in air, generated by condensation from the gaseous to the liquid state or by breaking up a liquid into a dispersed state, such as by splashing, foaming or atomizing.

- Vapor - the gaseous form of a substance that is normally in the solid or liquid state.

• Contact chemical agent which is any of the following:

- Corrosives - substances that in contact with living tissue cause destruction of the tissue by chemical action.

- Irritants - substances that on immediate, prolonged, or repeated contact with normal living tissue will induce a local inflammatory reaction.

- Toxicants - substances that have the inherent capacity to produce personal injury or illness to individuals by absorption through any body surface.

"Department" means the department of labor and industries. When this chapter refers to "we" or "us," it means labor and industries staff responsible for enforcing the Washington Industrial Safety and Health Act (WISHA).

"Director" means the director of the department of labor and industries, or a designated representative.

"Employee" means someone providing personal labor in the business of the employer, including anyone providing personal labor under an independent contract.

"Employer" means a business entity having one or more employees. Also, any person, partnership, or business entity with no employees but having industrial insurance coverage is both an employer and an employee. When this chapter refers to "you," it means the employer or a designated representative.

"Hazard" means a condition that can cause injury, death, or occupational disease.

"Listed" means listed by a nationally recognized testing laboratory.

"Must" means mandatory.

"Nationally recognized testing laboratory" See 29 C.F.R. 1910.7 (federal OSHA requirements).

"Pesticide" means:

• Any substance intended to prevent, destroy, control, repel, or mitigate any insect, rodent, snail, slug, fungus, weed, and any other form of plant or animal life or virus, except virus on or in a living person or other animal which is normally considered to be a pest or which the director may declare to be a pest;

• Any substance or mixture of substances intended to be used as a plant regulator, defoliant or desiccant; and

• Any spray adjuvant, such as a wetting agent, spreading agent, deposit builder, adhesive, emulsifying agent, deflocculating agent, water modifier, or similar agent with or without toxic properties of its own, intended to be used with any pesticide as an aid to its application or effect, and sold in a package or container separate from that of the pesticide with which it is to be used.

"Safety factor" means the ratio of the ultimate breaking strength of a piece of material or equipment to the actual working stress or safe load when in use.

"Should" or **"may"** means recommended.

"Standard safeguard" means a device designed and constructed to remove a hazard related to the machine, appliance, tool, building, or equipment to which it is attached.

"Working day," for appeals and accident reporting, means a calendar day, except Saturdays, Sundays, and legal holidays as defined by RCW 1.16.050. To compute the time within which an act is to be completed, exclude the first working day and include the last.

[Statutory Authority: RCW 49.17.010, 49.17.040, 49.17.050, and 49.17.060. WSR 03-10-068, § 296-307-009, filed 5/6/03, effective 8/1/03. Statutory Authority: RCW 49.17.040. WSR 98-24-096, § 296-307-009, filed 12/1/98, effective 3/1/99. WSR 97-09-013, recodified as § 296-307-009, filed 4/7/97, effective 4/7/97. Statutory Authority: RCW 49.17.040, [49.17.]050 and [49.17.]060. WSR 96-22-048, § 296-306A-009, filed 10/31/96, effective 12/1/96.]

WAC 296-307-012 What does it mean when equipment is approved by a nonstate organization? Whenever the department requires that you have equipment or processes approved by an organization such as the Underwriters Laboratories (UL), the Bureau of Mines (MSHA), or the National Institute for Occupational Safety and Health (NIOSH), the approval of that organization is considered evidence of your compliance.

[WSR 97-09-013, recodified as § 296-307-012, filed 4/7/97, effective 4/7/97. Statutory Authority: RCW 49.17.040, [49.17.]050 and [49.17.]060. WSR 96-22-048, § 296-306A-012, filed 10/31/96, effective 12/1/96.]

WAC 296-307-018 What are the employer's responsibilities?

You must:

(1) Provide a safe and healthful working environment.

(2) Ensure that employees do not use defective or unsafe tools and equipment, including tools and equipment that may be furnished by the employee.

(3) Implement a written accident prevention program as required by these standards.

(4) Implement a hazard communication program as required by WAC 296-307-550.

(5) Establish a system for complying with chapter 296-27 WAC for recording work-related injuries and illnesses and reporting to the department any work-related fatality, inpatient hospitalization, amputation, or loss of an eye. In addition, you must also report to the department within eight hours after any work-related incident that results in injury or illness from acute pesticide exposure.

(6) Follow the requirements for accident investigations in WAC 296-800-320.

(7) Provide safety education and training programs.

(8) Implement the requirements of WAC 296-62-074 through 296-62-07451 to ensure the safety of employees who are exposed to cadmium in the workplace.

(9) Implement the requirements of WAC 296-307-642 through 296-307-656 to ensure the safety of employees who are exposed to confined spaces in the workplace.

(10) Control chemical agents.

You must:

• Control chemical agents in a manner that they will not present a hazard to your workers; or

• Protect workers from the hazard of contact with, or exposure to, chemical agents.

Reference: Pesticides are chemical agents and are covered by chapter 296-307 WAC Part I, Pesticides (worker protection standard). Pesticides may also be covered by WAC 296-307-594, Respirators.

(11) Protect employees from biological agents.

You must:

• Protect employees from exposure to hazardous concentrations of biological agents that may result from processing, handling or using materials or waste.

Note: Examples of biological agents include:
- Animals or animal waste
- Body fluids
- Biological agents in a medical research lab
- Mold or mildew.

[Statutory Authority: RCW 49.17.010, 49.17.040, and 49.17.050. WSR 15-11-066, § 296-307-018, filed 5/19/15, effective 7/1/15. Statutory Authority: RCW 49.17.010, 49.17.040, 49.17.050, 49.17.060. WSR 05-01-166, § 296-307-018, filed 12/21/04, effective 4/2/05; WSR 03-10-068, § 296-307-018, filed 5/6/03, effective 8/1/03. Statutory Authority: RCW 49.17.010, [49.17].040, and [49.17].050. WSR 01-17-033, § 296-307-018, filed 8/8/01, effective 9/1/01. Statutory Authority: RCW 49.17.040. WSR 98-24-096, §

296-307-018, filed 12/1/98, effective 3/1/99. WSR 97-09-013, recodified as § 296-307-018, filed 4/7/97, effective 4/7/97. Statutory Authority: RCW 49.17.040, [49.17.]050 and [49.17.]060. WSR 96-22-048, § 296-306A-018, filed 10/31/96, effective 12/1/96.]

WAC 296-307-021 What are the employee's responsibilities? (1) Employees must cooperate with you and other employees in efforts to eliminate accidents.

(2) Employees must be informed of and observe all safe practices.

(3) Employees must notify you of unsafe conditions of equipment or workplaces.

(4) Employees must use all required safety devices and protective equipment.

(5) Employees must not willfully damage personal protective equipment.

(6) Each employee must promptly report any job-related injury or illness to his or her immediate supervisor, regardless of the degree of severity.

(7) Employees must not engage in any activity unrelated to work that may cause injury to other employees during the course of performing work assignments.

(8) Employees must attend any required training and/or orientation programs designed to increase their competency in occupational safety and health.

(9) Employees must not report to work under the influence of alcohol or controlled substances. Alcohol or controlled substances must not be brought on the worksite.

[WSR 97-09-013, recodified as § 296-307-021, filed 4/7/97, effective 4/7/97. Statutory Authority: RCW 49.17.040, [49.17.]050 and [49.17.]060. WSR 96-22-048, § 296-306A-021, filed 10/31/96, effective 12/1/96.]

WAC 296-307-024 How does an employer apply for a variance? (1) If you find that it is impractical for you to comply with specific requirements of this standard, we may permit a variation from the requirements. However, you must still provide equal protection by substitute means and comply with the requirements of chapter 49.17 RCW and chapter 296-350 WAC, variances.

(2) On the variance application you must certify that you have posted a copy of the written application in a place reasonably accessible to your employees. You must also mail a copy of the application to any authorized employee representative. The notice must advise employees of their right to request us to conduct a hearing on the variance application. You must notify employees before you apply.

Note: To request a permanent or temporary variance, you may write to: Department of Labor and Industries, WISHA Services, PO Box 44648, Olympia, WA 98504-4648. We will mail you an application form and instruction sheet. We will also send a copy of chapter 296-350 WAC, Variances, if you request it.

[Statutory Authority: RCW 49.17.040. WSR 98-24-096, § 296-307-024, filed 12/1/98, effective 3/1/99. WSR 97-09-013, recodified as § 296-307-024, filed 4/7/97, effective 4/7/97. Statutory Authority: RCW 49.17.040, [49.17.]050 and [49.17.]060. WSR 96-22-048, § 296-306A-024, filed 10/31/96, effective 12/1/96.]

Part B

Accident Prevention Program;

First-aid Requirements;

Safe Place Standard

WAC 296-307-030 What are the required elements of an accident prevention program? (1) You must instruct all employees in safe working practices at the beginning of employment. Your instruction must be tailored to the types of hazards to which employees are exposed.

(2) You must develop a written accident prevention program tailored to the needs of your agricultural operation and to the types of hazards involved.

(3) Your accident prevention program must contain at least the following elements:

(a) How, when, and where to report injuries and illnesses, and the location of first-aid facilities.

(b) How to report unsafe conditions and practices.

(c) The use and care of personal protective equipment.

(d) What to do in emergencies. See WAC 296-307-35015 for emergency action plan requirements.

(e) Identification of hazardous chemicals or materials and the instruction for their safe use.

(f) An on-the-job review of the practices necessary to perform job assignments in a safe and healthful manner.

(4) At least once a month, you must conduct a walk-around safety inspection of active job sites, the materials and equipment involved, and operating procedures. A representative chosen by employees must be invited and allowed to accompany you.

Note: Additional requirements in Part G-1, WAC 296-307-097, Outdoor heat exposure, may apply. Employers may address their outdoor heat exposure safety program either in their written accident prevention program (APP) or as a stand-alone written document. See Part G-1.

[Statutory Authority: RCW 49.17.010, 49.17.040, 49.17.050, and 49.17.060. WSR 09-07-098, § 296-307-030, filed 3/18/09, effective 5/1/09. Statutory Authority: RCW 49.17.040. WSR 98-24-096, § 296-307-030, filed 12/1/98, effective 3/1/99. WSR 97-09-013, recodified as § 296-307-030, filed 4/7/97, effective 4/7/97. Statutory Authority: RCW 49.17.040, [49.17.]050 and [49.17.]060. WSR 96-22-048, § 296-306A-030, filed 10/31/96, effective 12/1/96.]

WAC 296-307-033 How often must safety meetings be held? (1) Foreman-crew safety meetings must be held at least monthly or whenever there are significant changes in job assignments. These meetings must be tailored to the particular operation or activity occurring at the time.

(2) The meeting minutes must document subjects discussed and attendance.

(3) Short-term operations that last less than one month, such as harvesting, do not require foreman-crew safety meetings but only require initial safety orientation for the operations.

(4) You must maintain copies of the minutes of each foreman-crew safety meeting at the location where the majority of employees report to work each day.

(5) You must retain minutes of foreman-crew safety meetings for one year and be able to show us copies if we ask to see them.

[WSR 97-09-013, recodified as § 296-307-033, filed 4/7/97, effective 4/7/97. Statutory Authority: RCW 49.17.040, [49.17.]050 and [49.17.]060. WSR 96-22-048, § 296-306A-033, filed 10/31/96, effective 12/1/96.]

WAC 296-307-036 What items go on the safety bulletin board? (1) You must provide a bulletin board or posting area large enough to display the required safety and health poster, "Job Safety and Health Protection" (F416-081-000), and other safety education material.

(2) The bulletin board must be readily visible in a place where employees gather during some part of the work day. (For example, at the entrance to a field, a parking area, or in a farm building.)

(3) If for any reason any employee is unable to read the notices posted on the bulletin board, you must ensure that the message of the required poster explaining employee rights is communicated to the employee in terms he or she understands. This same requirement applies to variance applications, denials or grants, and to any other notice affecting the employee's rights under WISHA.

(4) Posting must be in the employees' language.

[WSR 97-09-013, recodified as § 296-307-036, filed 4/7/97, effective 4/7/97. Statutory Authority: RCW 49.17.040, [49.17.]050 and [49.17.]060. WSR 96-22-048, § 296-306A-036, filed 10/31/96, effective 12/1/96.]

WAC 296-307-039 First-aid rule summary. Your responsibility: Make sure first-aid trained personnel are available to provide quick and effective first aid.

You must:

Make sure that first-aid trained personnel are available to provide quick and effective first aid.

WAC 296-307-03905.

Make sure appropriate first-aid supplies are readily available.

WAC 296-307-03920.

Note:

- Employers who require their employees to provide first aid must comply with the bloodborne pathogen rule, chapter 296-823 WAC .
- Additional requirements relating to first aid are also located in the following sections:
  - WAC 296-307-07013(12), What rules apply to vehicles used to transport employees?
  - WAC 296-307-16175, First-aid requirements for operators of temporary worker housing.
  - WAC 296-307-16380, First-aid requirements for operators of cherry harvest camps.

Definitions:

First aid: The extent of treatment you would expect from a person trained in basic first aid, using supplies from a first-aid kit.

Emergency medical service: Medical treatment and care given at the scene of any medical emergency or while transporting any victim to a medical facility.

You can get copies of these rules by calling 1-800-4BE SAFE (1-800-423-7233), or by going to http://www.lni.wa.gov.

[Statutory Authority: RCW 49.17.010, 49.17.040, 49.17.050, 49.17.060. WSR 05-01-166, § 296-307-039, filed 12/21/04, effective 4/2/05; WSR 04-07-160, § 296-307-039, filed 3/23/04, effective 5/1/04. Statutory Authority: RCW 49.17.010, [49.17].040, [49.17].050. WSR 02-12-098, § 296-307-039, filed 6/5/02, effective 8/1/02; WSR 01-17-033, § 296-307-039, filed 8/8/01, effective 9/1/01. WSR 97-09-013, recodified as § 296-307-039, filed 4/7/97, effective 4/7/97. Statutory Authority: RCW 49.17.040, [49.17.]050 and [49.17.]060. WSR 96-22-048, § 296-306A-039, filed 10/31/96, effective 12/1/96.]

WAC 296-307-03905 Make sure that first-aid trained personnel are available to provide quick and effective first aid.

You must:

Comply with the first-aid training requirements of 29 C.F.R. 1910.151(b) which states:

"In the absence of an infirmary, clinic, or hospital in near proximity to the workplace which is used for the treatment of all injured employees, a person or persons shall be adequately trained to render first aid."

[Statutory Authority: RCW 49.17.010, 49.17.040, 49.17.050, and 49.17.060. WSR 04-07-160, § 296-307-03905, filed 3/23/04, effective 5/1/04. Statutory Authority: RCW 49.17.010, [49.17].040, and [49.17].050. WSR 01-17-033, § 296-307-03905, filed 8/8/01, effective 9/1/01.]

WAC 296-307-03920 Make sure appropriate first-aid supplies are readily available. You must:

- Make sure first-aid supplies are readily available. (See first-aid kit table.)
- Make sure first-aid supplies at your workplace are appropriate to:
  - Your occupational setting.
  - The response time of your emergency medical services.

First-Aid Kit Table

Number of employees normally assigned to worksite	Minimum first-aid supplies required at worksite
1 - 15 Employees	1 First-aid kit
16 - 30 Employees	2 First-aid kits
31 - 50 Employees	3 First-aid kits

Note:

- First-aid kits from your local retailer or safety supplier should be adequate for most nonindustrial employers.
- The following is a list of suggested items for your first-aid kit:
  - 1 absorbent compress, 4 x 8 inches
  - 16 adhesive bandages, 1 x 3 inches
  - 1 adhesive tape, 5 yards long
  - 10 antiseptic single-use packages, 0.5 g application
  - 6 burn treatment single-use packages, 0.5 g application
  - 1 eye covering (for two eyes)
  - 1 eye wash, 1 fluid ounce
  - 4 sterile pads, 3 x 3 inches
  - 2 pair of medical exam gloves
  - 1 triangular bandage, 39 x 39 x 55 inches

  Optional first-aid kit contents
  - Bandage compresses, 2 x 2 inches, 3 x 3 inches and 5 x 5 inches
  - Self-activating cold packs, 4 x 5 inches
  - Roller bandages, 6 yards long
  - Mouth-to-mouth barrier for CPR
- Kits should be checked at least weekly to ensure adequate number of needed items are available.
- Kits may be carried in any motor vehicle that is used near the crew.

You must:

• Make sure that first-aid supplies are:

- Easily accessible to all your employees.

- Stored in containers that protect them from damage, deterioration, or contamination. Containers must be clearly marked, not locked, and may be sealed.

- Able to be moved to the location of an injured or acutely ill worker.

[Statutory Authority: RCW 49.17.010, 49.17.040, 49.17.050, 49.17.060. WSR 05-01-166, § 296-307-03920, filed 12/21/04, effective 4/2/05. Statutory Authority: RCW 49.17.010, [49.17].040, and [49.17].050. WSR 01-17-033, § 296-307-03920, filed 8/8/01, effective 9/1/01.]

WAC 296-307-03930 Make sure emergency washing facilities are functional and readily accessible.

You must:

• Provide an emergency shower:

- When there is potential for major portions of an employee's body to contact corrosives, strong irritants, or toxic chemicals

- That delivers water to cascade over the user's entire body at a minimum rate of 20 gallons (75 liters) per minute for fifteen minutes or more.

• Provide an emergency eyewash:

- When there is potential for an employee's eyes to be exposed to corrosives, strong irritants, or toxic chemicals

- That irrigates and flushes both eyes simultaneously while the user holds their eyes open

- With an on-off valve that activates in one second or less and remains on without user assistance until intentionally turned off

- That delivers at least 0.4 gallons (1.5 liters) of water per minute for fifteen minutes or more.

Note: Chemicals that require emergency washing facilities:

• You can determine whether chemicals in your workplace require emergency washing facilities by looking at the material safety data sheet (MSDS) or similar documents. The MSDS contains information about first-aid requirements and emergency flushing of skin or eyes

• For chemicals developed in the workplace, the following resources provide information about first-aid requirements:

- NIOSH Pocket Guide to Chemical Hazards

.*DHHS (NIOSH) Publication No. 97-140

.*http://www.cdc.gov/niosh/npg/ggdstart.html

- Threshold Limit Values for Chemical Substances and Physical Agents American Conference of Governmental Industrial Hygienists (ACGIH).

You must:

• Make sure emergency washing facilities:

- Are located so that it takes no more than ten seconds to reach

- Are kept free of obstacles blocking their use

- Function correctly

- Provide the quality and quantity of water that is satisfactory for emergency washing purposes.

Note: • If water in emergency washing facilities is allowed to freeze, they will not function correctly. Precautions need to be taken to prevent this from happening

• The travel distance to an emergency washing facility should be no more than fifty feet (15.25 meters)

• For further information on the design, installation, and maintenance of emergency washing facilities, see American National Standards Institute (ANSI) publication Z358.1 - 1998, *Emergency Eyewash and Shower Equipment*. Emergency washing facilities that are designed to meet ANSI Z358.1 - 1998 also meet the requirements of this standard. The ANSI standard can be obtained from the American National Standards Institute, 1430 Broadway, New York, New York 10018.

Reference: • Training in the location and use of your emergency washing facilities is required under the employer chemical hazard communication rule, WAC 296-307-550, and the accident prevention program rule, WAC 296-307-030.

[Statutory Authority: RCW 49.17.010, 49.17.040, 49.17.050, and 49.17.060. WSR 03-10-068, § 296-307-03930, filed 5/6/03, effective 8/1/03.]

WAC 296-307-03935 Inspect and activate your emergency washing facilities.

You must:

• Make sure all plumbed emergency washing facilities are inspected once a year to make sure they function correctly.

Note: Inspections should include:

• Examination of the piping

• Making sure that water is available at the appropriate temperature and quality

• Activation to check that the valves and other hardware work properly

• Checking the water flow rate.

You must:

• Make sure plumbed emergency eyewashes and hand-held drench hoses are activated weekly to check the proper functioning of the valves, hardware, and availability of water

• Make sure all self-contained eyewash equipment and personal eyewash units are inspected and maintained according to manufacturer instructions.

- Inspections to check proper operation must be done once a year

- Sealed personal eyewashes must be replaced after the manufacturer's expiration date.

Note: Most manufacturers recommend replacing fluid in open self-contained eyewashes every six months. The period for sealed containers is typically two years.

[Statutory Authority: RCW 49.17.010, 49.17.040, 49.17.050, and 49.17.060. WSR 03-10-068, § 296-307-03935, filed 5/6/03, effective 8/1/03.]

WAC 296-307-03940 Make sure supplemental flushing equipment provides sufficient water.

Note: Supplemental flushing equipment cannot be used in place of required emergency showers or eyewashes.

You must:

• Make sure hand-held drench hoses deliver at least 3.0 gallons (11.4 liters) of water per minute for fifteen minutes or more.

Note: Why use a drench hose? A drench hose is useful when:

• The spill is small and does not require an emergency shower

• Used with a shower for local rinsing, particularly on the lower extremities.

You must:

• Make sure personal eyewash equipment delivers only clean water or other medically approved eye flushing solutions.

[Statutory Authority: RCW 49.17.010, 49.17.040, 49.17.050, and 49.17.060. WSR 03-10-068, § 296-307-03940, filed 5/6/03, effective 8/1/03.]

WAC 296-307-03945 Definitions.

Corrosive

As used in first aid, WAC 296-307-039, is a substance that causes destruction of living tissue by chemical action, including acids with a pH of 2.5 or below or caustics with a pH of 11.0 or above.

Emergency washing facilities

Emergency washing facilities are emergency showers, eyewashes, eye/face washes, hand-held drench hoses, or other similar units.

Hand-held drench hoses

Hand-held drench hoses are single-headed emergency washing devices connected to a flexible hose that can be used to irrigate and flush the face or other body parts.

Personal eyewash units

Personal eyewash units are portable, supplementary units that support plumbed units or self-contained units, or both, by delivering immediate flushing for less than fifteen minutes.

Strong irritant

As used in first aid, WAC 296-307-039, is a chemical that is not corrosive, but causes a strong, temporary inflammatory effect on living tissue by chemical action at the site of contact.

Toxic chemical

As used in first aid, WAC 296-307-039, is a chemical that produces serious injury or illness when absorbed through any body surface.

[Statutory Authority: RCW 49.17.010, 49.17.040, 49.17.050, and 49.17.060. WSR 03-10-068, § 296-307-03945, filed 5/6/03, effective 8/1/03.]

WAC 296-307-045 What are the requirements of the safe place standard? (1) You must furnish to each employee a place of employment free from recognized controllable hazards likely to cause serious injury or death.

(2) You must furnish and require employees to use any safety devices and safeguards that are needed to control recognized hazards. All agricultural methods, operations, and processes must be designed to promote the safety and health of employees.

(3) You must not require an employee to engage in any duty or enter any place that is not safe.

(4) The following are prohibited:

(a) Removing, displacing, damaging, destroying or carrying off any safety device, safeguard, notice or warning intended for use in any place of employment.

(b) Interfering in any way with the use of any safety device, method or process adopted for the protection of any employee.

(5) Intoxicating beverages or narcotics in or around worksites. Employees under the influence of alcohol or narcotics are prohibited from the worksite.

Exception: This rule does not apply to anyone taking prescription drugs and/or narcotics as directed by a physician providing such use does not endanger the employee or others.

[WSR 97-09-013, recodified as § 296-307-045, filed 4/7/97, effective 4/7/97. Statutory Authority: RCW 49.17.040, [49.17.]050 and [49.17.]060. WSR 96-22-048, § 296-306A-045, filed 10/31/96, effective 12/1/96.]

Part C

Hand Tools

WAC 296-307-050 What requirements apply to hand tools? (1) Using hoes with handles less than four feet long or any hand tool used for weeding or thinning crops in a stooped position, is prohibited.

(2) You must ensure that hand tools are in good condition. Using defective hand tools is prohibited.

(3) You must ensure that hand tools are stored safely when not in use.

[WSR 97-09-013, recodified as § 296-307-050, filed 4/7/97, effective 4/7/97. Statutory Authority: RCW 49.17.040, [49.17.]050 and [49.17.]060. WSR 96-22-048, § 296-306A-050, filed 10/31/96, effective 12/1/96.]

Part D

Ladders, Bulk Storage, Pits, and Trenches

WAC 296-307-055 Ladders.

[WSR 97-09-013, recodified as § 296-307-055, filed 4/7/97, effective 4/7/97. Statutory Authority: RCW 49.17.040, [49.17.]050 and [49.17.]060. WSR 96-22-048, § 296-306A-055, filed 10/31/96, effective 12/1/96.]

WAC 296-307-05501 How must ladders be cared for and maintained? (1) Ladders must be checked for defects before use, and thoroughly inspected periodically. Ladders shall be inspected immediately in the following situations:

(a) If a ladder tips over, inspect for side rails dents or bends, or excessively dented rungs; check all rung-to-side-rail connections; check hardware connections; check rivets for shear.

(b) If a ladder is exposed to excessive heat, inspect visually for damage and test for deflection and strength characteristics. If you are unsure about the ladder's condition, seek help from the manufacturer.

(2) Ladders must be maintained in good condition at all times. Joints between steps and side rails must be tight. All hardware and fittings must be securely attached, and the moveable parts must operate freely without binding or with too much play.

(3) Defective ladders must be withdrawn from service for repair or destruction and tagged as "Dangerous—Do not use."

(4) Ladders with broken or missing steps, rungs, or cleats, broken side rails, or other faulty equipment must not be used; improvised repairs must not be made.

(5) Ladders must be handled with care. Avoid unnecessary dropping, jarring, or misuse.

(6) Ladder storage must:

(a) Protect the ladder when not in use;

(b) Provide sufficient support to prevent excessive sagging;

(c) Provide ease of access or inspection; and

(d) Prevent danger of accidents when withdrawing a ladder for use.

[WSR 97-09-013, recodified as § 296-307-05501, filed 4/7/97, effective 4/7/97. Statutory Authority: RCW 49.17.040, [49.17.]050 and [49.17.]060. WSR 96-22-048, § 296-306A-05501, filed 10/31/96, effective 12/1/96.]

WAC 296-307-05503 How must an employer instruct employees to use ladders? (1) At the beginning of employment, you must provide employees with orientation and training on the proper use of ladders, including how to set a ladder and properly dismount with a full load.

(2) To prevent ladder upset, you must instruct employees to avoid overreaching while standing on the ladder.

(3) You must instruct employees that before climbing ladders; rungs, shoes, and boots must be clean of substances that would make them hazardous.

(4) Employees must not climb up or down ladders while carrying tools or materials that interfere with the free use of both hands.

(5) Ladders must not be placed on boxes, barrels, or other unstable bases to obtain additional height.

(6) Stepladders must not be used as single ladders.

(7) When working from a ladder over twenty-five feet from the ground or floor, the ladder must be secured at both top and bottom. When work on a ladder over twenty-five feet from the ground or floor requires the use of both hands, a safety belt must be worn and the safety lanyard secured to the ladder.

(8) Portable ladders must be placed so that the side rails have a secure footing. The top rest for portable rung and cleat ladders must be reasonably rigid and strong enough to support the applied load. The top of the ladder must be placed with the two rails supported, unless equipped with a single support attachment. Such an attachment should be substantial and large enough to support the ladder under load.

(9) Ladders carried on vehicles should be adequately supported to avoid sagging and securely fastened in position to minimize chafing and the effects of road shocks.

[WSR 97-09-013, recodified as § 296-307-05503, filed 4/7/97, effective 4/7/97. Statutory Authority: RCW 49.17.040, [49.17.]050 and [49.17.]060. WSR 96-22-048, § 296-306A-05503, filed 10/31/96, effective 12/1/96.]

WAC 296-307-05505 How must orchard ladders be used? (1) Orchard ladders longer than sixteen feet are prohibited.

(2) Employers must instruct employees to not stand on the top two steps (the top cap and the next step down) of orchard ladders.

(3) Employers must instruct employees to not step off the ladder onto branches of trees except onto the main crotch.

(4) Standing on the top two steps of the orchard ladder is prohibited.

[WSR 97-09-013, recodified as § 296-307-05505, filed 4/7/97, effective 4/7/97. Statutory Authority: RCW 49.17.040, [49.17.]050 and [49.17.]060. WSR 96-22-048, § 296-306A-05505, filed 10/31/96, effective 12/1/96.]

WAC 296-307-05507 What other requirements apply to ladders? (1) Ladders made by fastening cleats across a single rail are prohibited.

(2) Wood ladders, when not in use, should be stored where they will not be exposed to the elements, but where there is good ventilation. They must be stored away from radiators, stoves, steam pipes, or other excessive heat or dampness.

(3) Wooden ladders should be kept coated with a suitable protective material. Painted ladders are acceptable if the ladders are carefully inspected prior to painting by competent and experienced inspectors acting for, and responsible to, the purchaser, and if the ladders are not for resale.

(4) A ladder must have feet that are appropriate for the surface on which it will be used.

For example: A ladder used on a slippery surface must have steel points or other nonslip material on its feet.

(5) Ladders must not be placed in front of doors opening toward the ladder unless the door is blocked open, locked, or guarded.

(6) Ladder safety devices may be used on tower, water tank and chimney ladders over twenty feet long in place of cage protection. No landing platform is required in these cases. All ladder safety devices such as lifebelts, friction brakes, and sliding attachments must meet the design requirements of the ladders that they serve.

(7) See chapter 296-307 WAC Part K for requirements related to working near overhead lines.

[Statutory Authority: RCW 49.17.040. WSR 98-24-096, § 296-307-05507, filed 12/1/98, effective 3/1/99. WSR 97-09-013, recodified as § 296-307-05507, filed 4/7/97, effective 4/7/97. Statutory Authority: RCW 49.17.040, [49.17.]050 and [49.17.]060. WSR 96-22-048, § 296-306A-05507, filed 10/31/96, effective 12/1/96.]

WAC 296-307-060 What requirements apply to job-made ladders? A "job-made ladder" is a ladder that you or your employees build.

Job-made ladders must meet the following requirements:

(1) All cleats must be made of one-by-four-inch nominal lumber, or stronger.

(2) Cleats must be inset into the edges of side rails to a depth of one-half inch, or filler blocks must be used on the rails between the cleats.

(3) Each cleat must be fastened to each rail with three 8d common wire nails or other fasteners of equal strength.

(4) Cleats must be uniformly spaced approximately 12 inches from the top of one cleat to the top of the next.

(5) Side rails must be continuous, unless splices develop the full strength of a continuous rail of equal length.

[WSR 97-09-013, recodified as § 296-307-060, filed 4/7/97, effective 4/7/97. Statutory Authority: RCW 49.17.040, [49.17.]050 and [49.17.]060. WSR 96-22-048, § 296-306A-060, filed 10/31/96, effective 12/1/96.]

WAC 296-307-061 What requirements apply to working around bins, bunkers, hoppers, tanks, pits, and trenches? (1) Employees must be prohibited from entering any bin, bunker, hopper, or similar area when loose materials (such as chips, sand, grain, gravel, sawdust, etc.) may collapse, unless the employee wears a safety belt with a lifeline attached and is attended by a helper.

Note: Silage pits are exempt from this section.

Reference: For requirements relating to confined spaces, see WAC 296-307-642 through 296-307-656.

(2) When employees are required to work in a trench or a pit 4 feet deep or more, the trench or the pit must be shored or sloped according to the following table:

SOIL OR ROCK TYPE MAXIMUM ALLOWABLE	SLOPES (H:V) (1) FOR EXCAVATIONS LESS THAN 20 FEET DEEP (2)
STABLE ROCK	VERTICAL (90°)
TYPE A	3/4:1 (53°)

TYPE B	1:1 (45°)
TYPE C	1 1/2:1 (34°)

1 Numbers in parentheses next to maximum allowable slopes are angles in degrees from the horizontal. Angles have been rounded off.

2 Sloping or benching for excavations greater than 20 feet deep must be designed by a registered professional engineer.

(3) Each soil and rock deposit must be classified by a competent person as Stable Rock, Type A, B, or C according to the definitions in WAC 296-155-66401. "Competent person" means someone who is able to identify working conditions that are hazardous to employees, and has authority to take prompt action to eliminate the hazards.

(4) Classification of the deposits must be based on the results of at least one visual and at least one manual analysis. The analyses must be conducted by a competent person using tests in recognized methods of soil classification and testing such as those adopted by the American Society for Testing Materials, or the U.S. Department of Agriculture textural classification system.

[Statutory Authority: RCW 49.17.010, 49.17.040, 49.17.050, 49.17.060. WSR 05-01-166, § 296-307-061, filed 12/21/04, effective 4/2/05. WSR 97-09-013, recodified as § 296-307-061, filed 4/7/97, effective 4/7/97. Statutory Authority: RCW 49.17.040, [49.17.]050 and [49.17.]060. WSR 96-22-048, § 296-306A-061, filed 10/31/96, effective 12/1/96.]

Part E

Vehicles and Farm Field Equipment

WAC 296-307-065 How must slow-moving vehicles be marked? (1) You must ensure that all farm tractors and other slow-moving farm vehicles and equipment used on public roads have lamps, reflectors, and a slow-moving vehicle emblem. From one-half hour after sunset to one-half hour before sunrise, slow-moving vehicles must have lights and reflectors.

(2) The slow-moving vehicle emblem is a fluorescent yellow-orange triangle with a dark red reflective border. (See figure.) The emblem must be used on public roads only by vehicles designed to move slowly (25 M.P.H. or less).

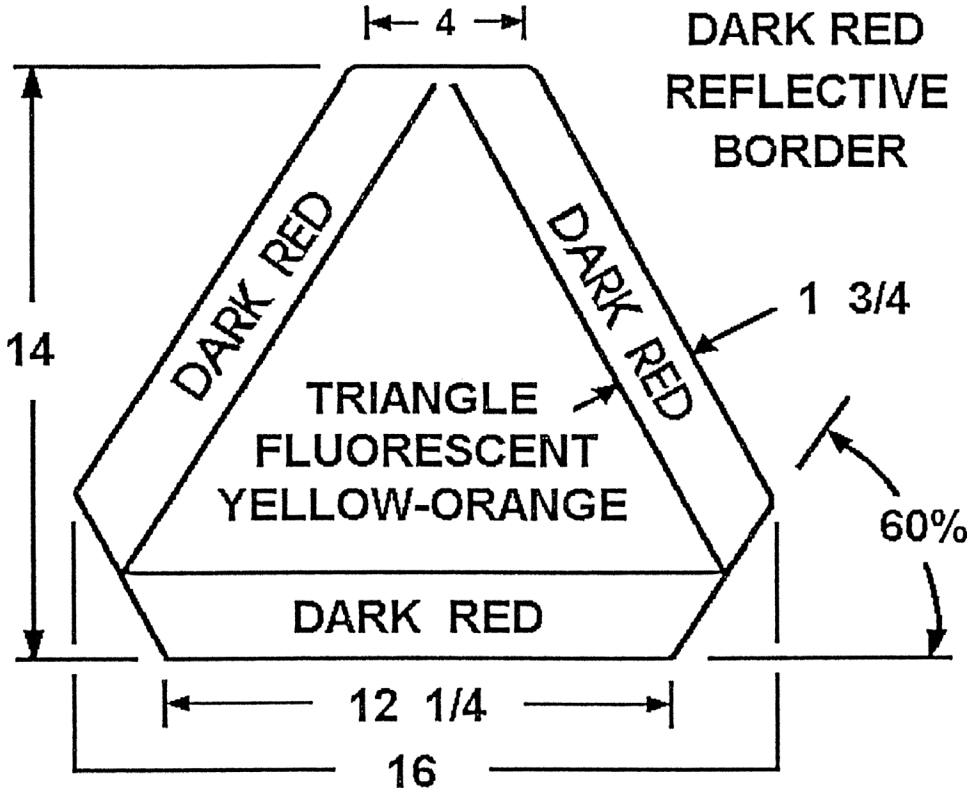

[WSR 97-09-013, recodified as § 296-307-065, filed 4/7/97, effective 4/7/97. Statutory Authority: RCW 49.17.040, [49.17.]050 and [49.17.]060. WSR 96-22-048, § 296-306A-065, filed 10/31/96, effective 12/1/96.]

WAC 296-307-070 Motor vehicles.

[WSR 97-09-013, recodified as § 296-307-070, filed 4/7/97, effective 4/7/97. Statutory Authority: RCW 49.17.040, [49.17.]050 and [49.17.]060. WSR 96-22-048, § 296-306A-070, filed 10/31/96, effective 12/1/96.]

WAC 296-307-07001 How must motor vehicles be maintained? (1) You must maintain all motor vehicles and their parts in good repair and safe condition.

(2) You must not use tires that are worn beyond the point of safety.

(3) Employees must report to you any motor vehicle or other farm equipment that is in unsafe operating condition.

You must ensure that the vehicle or equipment is removed from service and repaired before use.

(4) Before an employee performs service or repair work under hydraulic or mechanical raised dump truck beds, blades, discs, or other equipment, the raised portion of the equipment must be manually pinned or blocked to prevent falling.

[WSR 97-09-013, recodified as § 296-307-07001, filed 4/7/97, effective 4/7/97. Statutory Authority: RCW 49.17.040, [49.17.]050 and [49.17.]060. WSR 96-22-048, § 296-306A-07001, filed 10/31/96, effective 12/1/96.]

WAC 296-307-07003 How must motor vehicles be operated? (1) Vehicles must be driven at safe operating speed.

(2) Truck drivers must operate equipment at a safe speed for roadway conditions.

(3) When an employee backing a truck has obstructed vision, the employee must be assisted by a signaler. The signaler must have a clear view of the rear of the truck and the operator of the truck.

(4) Truck drivers must sound their horn before starting to back, and intermittently while backing.

(5) Shut off motors before refueling. Take care to prevent fuel from spilling on hot parts.

[WSR 97-09-013, recodified as § 296-307-07003, filed 4/7/97, effective 4/7/97. Statutory Authority: RCW 49.17.040, [49.17.]050 and [49.17.]060. WSR 96-22-048, § 296-306A-07003, filed 10/31/96, effective 12/1/96.]

WAC 296-307-07005 Who may operate motor vehicles? Only qualified drivers may operate motor vehicles and must have a current motor vehicle operator's license.

[WSR 97-09-013, recodified as § 296-307-07005, filed 4/7/97, effective 4/7/97. Statutory Authority: RCW 49.17.040, [49.17.]050 and [49.17.]060. WSR 96-22-048, § 296-306A-07005, filed 10/31/96, effective 12/1/96.]

WAC 296-307-07007 What requirements apply to motor vehicle brakes? (1) You must ensure that motor vehicles have brakes that will safely hold the maximum load on maximum grades.

(2) Trucks parked on an incline must have the steered wheels turned into the curb and must have at least one "driver" wheel chocked on each side, independent of the braking system.

Exception: If the truck has a functioning secondary braking system, the turned wheels and chock are not required.

(3) You must ensure that trailers have working air brakes, or another approved type. Air must be cut into the trailer brake system at the time that the trailer is coupled to the truck.

(4) The driver must test truck and trailer brakes before driving down a steep grade.

[WSR 97-09-013, recodified as § 296-307-07007, filed 4/7/97, effective 4/7/97. Statutory Authority: RCW 49.17.040, [49.17.]050 and [49.17.]060. WSR 96-22-048, § 296-306A-07007, filed 10/31/96, effective 12/1/96.]

WAC 296-307-07009 How must motor vehicles be loaded and unloaded? (1) You must ensure that employees load and unload motor vehicles safely.

(2) All loads transported on trucks or truck and trailer combinations must be properly secured and distributed. Loads must not exceed the safe operating load for the roadway condition and the capacity of the bridges, trestles, and other structures.

[WSR 97-09-013, recodified as § 296-307-07009, filed 4/7/97, effective 4/7/97. Statutory Authority: RCW 49.17.040, [49.17.]050 and [49.17.]060. WSR 96-22-048, § 296-306A-07009, filed 10/31/96, effective 12/1/96.]

WAC 296-307-07011 What safety equipment must motor vehicles have? All motor vehicles must have standard lights, horn, flags, flares, and other safety equipment that conforms to the state of Washington motor vehicles laws.

[WSR 97-09-013, recodified as § 296-307-07011, filed 4/7/97, effective 4/7/97. Statutory Authority: RCW 49.17.040, [49.17.]050 and [49.17.]060. WSR 96-22-048, § 296-306A-07011, filed 10/31/96, effective 12/1/96.]

WAC 296-307-07013 What rules apply to vehicles used to transport employees? You must ensure that motor vehicles used regularly to transport employees meet the following requirements:

(1) The vehicles are well equipped, covered against the weather, and maintained in good mechanical condition at all times.

(2) A sufficient number of properly secured seats are provided in each vehicle to accommodate the number of employees transported. When emergency conditions make it necessary to transport more employees than the seating capacity can accommodate, all employees must ride within the vehicle. No employee may ride on fenders or running boards of the vehicle.

(3) No employees may ride in or on any vehicle with their legs hanging over the end or sides. All trucks without tail gates should have safety bars.

(4) The vehicles have storage strong enough to retain sharp tools that could present a hazard to employees being transported.

(5) All dump-trucks used to transport employees have an adequate safety chain or locking device to ensure that the body of the truck is not raised while employees are riding in it.

(6) Explosives or highly inflammable materials are not carried in or on the vehicle while it is used to transport employees.

(7) Exhaust systems are installed and maintained in proper condition, and are designed to eliminate the employee exposure to exhaust gases and fumes.

(8) Within the cab, crew trucks must carry only the number of passengers for which they are designed. In any seating arrangement, the driver must be able to maintain full freedom of motion. The driver's normal vision must be free from obstruction by passengers or the seating arrangement.

(9) All enclosed crew trucks have an emergency exit in addition to the regular entrance.

(10) Trucks used for hauling gravel may be used as crew trucks if they meet the following requirements:

(a) Steps in proper places;

(b) Wooden floors;

(c) Securely fastened seats;

(d) Truck is properly covered; and

(e) Compliance with all other general regulations covering crew trucks.

(11) Half-ton vehicles must haul no more than six persons including driver. Three-quarter-ton vehicles must haul no more than eight persons including driver.

(12) The vehicle is equipped with the first-aid supplies required by WAC 296-307-03920, two blankets, and a fire extinguisher.

Note: Additional requirements relating to first aid are located in WAC 296-307-039.

(13) Heating units with open fires are not used in vehicles transporting crews.

[Statutory Authority: RCW 49.17.010, 49.17.040, 49.17.050, 49.17.060. WSR 05-01-166, § 296-307-07013, filed 12/21/04, effective 4/2/05. Statutory Authority: RCW 49.17.010, [49.17].040, and [49.17].050. WSR 01-17-033, § 296-307-07013, filed 8/8/01, effective 9/1/01. Statutory Authority: RCW 49.17.040. WSR 98-24-096, § 296-307-07013, filed 12/1/98, effective 3/1/99. WSR 97-09-013, recodified as § 296-307-07013, filed 4/7/97, effective 4/7/97. Statutory Authority: RCW 49.17.040, [49.17.]050 and [49.17.]060. WSR 96-22-048, § 296-306A-07013, filed 10/31/96, effective 12/1/96.]

WAC 296-307-073 What requirements apply to changing and charging storage batteries? (1) Battery changing installations must be located in areas designated for that purpose.

(2) Facilities must be provided for:

- Flushing and neutralizing spilled electrolyte;
- Fire protection;
- Protecting charging apparatus from damage by trucks; and
- Adequate ventilation of fumes from gassing batteries.

(3) Racks used to support batteries should be made of or covered with materials that will not create sparks.

(4) A conveyor, overhead hoist, or equivalent material handling equipment must be provided for handling batteries.

(5) Reinstalled batteries must be properly positioned and secured in the vehicle.

(6) A carboy tilter or siphon must be provided for handling electrolyte.

(7) When mixing water and acid for charging batteries, pour acid into water; do not pour water into acid.

(8) Vehicles must be properly positioned and the brake applied before attempting to change or charge batteries.

(9) When charging batteries, the vent caps should be kept in place to avoid electrolyte spray. You must ensure that vent caps function. The battery (or compartment) cover(s) must be open for cooling.

(10) Precautions shall be taken to prevent open flames, sparks, or electric arcs in battery charging areas.

(11) Tools and other metallic objects must be kept away from the tops of uncovered batteries.

[WSR 97-09-013, recodified as § 296-307-073, filed 4/7/97, effective 4/7/97. Statutory Authority: RCW 49.17.040, [49.17.]050 and [49.17.]060. WSR 96-22-048, § 296-306A-073, filed 10/31/96, effective 12/1/96.]

WAC 296-307-076 How must farm field equipment be guarded? "Farm field equipment" means tractors or implements, including self-propelled implements, used in agricultural operations.

(1) All power transmission components must be guarded according to WAC 296-307-280.

(2) The manufacturer's instruction manual, if published by the manufacturer and currently available, must be the source of information for the safe operation and maintenance of field equipment.

(3) You must ensure that all power takeoff shafts, including rear, mid-mounted or side-mounted shafts, are guarded by a master shield, as follows:

(a) The rear power takeoff has a master shield. The master shield is strong enough to prevent permanent deformation of the shield when a 250-pound operator mounts or dismounts the tractor using the shield as a step.

(b) Power takeoff driven equipment is guarded to prevent employee contact with rotating members of the power drive system. When the tractor master shield must be removed to use specific power takeoff driven equipment, the equipment must provide protection from the part of the tractor power takeoff shaft that protrudes from the tractor.

(c) Signs are placed at prominent locations on the tractor and on power takeoff driven equipment requiring that safety shields are kept in place.

(4) The following functional components must be shielded to a degree consistent with the intended function and operator's vision of the component.

- Snapping or husking rolls;
- Straw spreaders and choppers;
- Cutterbars;
- Flail rotors;
- Rotary beaters;
- Mixing augers;
- Feed rolls;
- Conveying augers;
- Rotary tillers; and
- Similar units that must be exposed for proper function

(5) Where removing a guard or access door will expose an employee to any component that continues to rotate after the power is disengaged, you must provide, in the immediate area:

(a) A safety sign warning the employee to look and listen for evidence of rotation and to wait until all components have stopped before removing the guard or access door.

(b) A readily visible or audible warning of rotation on equipment manufactured after October 25, 1976.

(6) If the mounting steps or ladder and the handholds of the propelling vehicle are made inaccessible by installation of other equipment, other steps and handholds must be provided on the equipment.

(7) You must ensure that the operator's steps and platform have a slip-resistant covering to minimize the possibility of slipping.

(8) Powered machines not driven by an individual motor must have a clutch or other effective means of stopping.

(9) All friction clutches must have sufficient clearance and be kept adjusted to prevent drag or creeping when disengaged.

[Statutory Authority: RCW 49.17.040. WSR 98-24-096, § 296-307-076, filed 12/1/98, effective 3/1/99. WSR 97-09-013, recodified as § 296-307-076, filed 4/7/97, effective 4/7/97. Statutory Authority: RCW 49.17.040, [49.17.]050 and [49.17.]060. WSR 96-22-048, § 296-306A-076, filed 10/31/96, effective 12/1/96.]

Part F

Rollover Protective Structures (ROPS) for Tractors

WAC 296-307-080 Rollover protective structures (ROPS) for tractors.

[WSR 97-09-013, recodified as § 296-307-080, filed 4/7/97, effective 4/7/97. Statutory Authority: RCW 49.17.040, [49.17.]050 and [49.17.]060. WSR 96-22-048, § 296-306A-080, filed 10/31/96, effective 12/1/96.]

WAC 296-307-08003 Which agricultural tractors are covered by this section? All agricultural tractors manufactured after October 25, 1976, must meet the requirements of WAC 296-307-080. An agricultural tractor manufactured on or before October 25, 1976, must meet the requirements of WAC 296-307-080 if:

(1) The tractor was built or sold with rollover protective structures (ROPS) as an optional accessory; or

(2) According to the manufacturer, the tractor was designed to accommodate the addition of ROPS.

[Statutory Authority: RCW 49.17.040. WSR 98-24-096, § 296-307-08003, filed 12/1/98, effective 3/1/99. WSR 97-09-013, recodified as § 296-307-08003, filed 4/7/97, effective 4/7/97. Statutory Authority: RCW 49.17.040, [49.17.]050 and [49.17.]060. WSR 96-22-048, § 296-306A-08003, filed 10/31/96, effective 12/1/96.]

WAC 296-307-08006 What definitions apply to rollover protective structures (ROPS) for agricultural tractors? "Agricultural tractor" means a two-wheel-drive or four-wheel-drive vehicle, or a track vehicle of more than twenty net engine horsepower, designed to furnish the power to pull, carry, propel, or drive implements that are designed for agriculture. All human-powered implements are excluded.

"Low profile tractor" means a wheel or track-equipped vehicle with the following characteristics:

• The front wheel spacing is equal to the rear wheel spacing, as measured between the centerlines of the wheels;

• The clearance from the bottom of the tractor chassis to the ground is eighteen inches or less;

• The highest point of the hood is sixty inches or less, and

• The tractor is designed so that the operator straddles the transmission when seated.

[WSR 97-09-013, recodified as § 296-307-08006, filed 4/7/97, effective 4/7/97. Statutory Authority: RCW 49.17.040, [49.17.]050 and [49.17.]060. WSR 96-22-048, § 296-306A-08006, filed 10/31/96, effective 12/1/96.]

WAC 296-307-08009 What requirements apply to the testing and performance of ROPS used on agricultural tractors? You must provide a rollover protective structure (ROPS) for each employee-operated tractor that is covered by WAC 296-307-080. ROPS used on wheel-type tractors must meet the test and performance requirements of OSHA 1928.51 C.F.R. Protective frames for wheel type agricultural tractors, and ROPS used on track-type tractors must meet the test and performance requirements of SAE Standard J334a (July 1970) and the portions of SAE Standard J167 (1971) pertaining to overhead protection requirements.

[Statutory Authority: RCW 49.17.010, [49.17].040, [49.17].050. WSR 02-12-098, § 296-307-08009, filed 6/5/02, effective 8/1/02. Statutory Authority: RCW 49.17.040. WSR 98-24-096, § 296-307-08009, filed 12/1/98, effective 3/1/99. WSR 97-09-013, recodified as § 296-307-08009, filed 4/7/97, effective 4/7/97. Statutory Authority: RCW 49.17.040, [49.17.]050 and [49.17.]060. WSR 96-22-048, § 296-306A-08009, filed 10/31/96, effective 12/1/96.]

WAC 296-307-08012 What requirements apply to seatbelts used with ROPS on agricultural tractors? (1) Where ROPS are required by WAC 296-307-080, you must:

(a) Provide each tractor with a seatbelt;

(b) Require that each employee use the seatbelt while the tractor is moving; and

(c) Require that each employee tighten the seatbelt sufficiently to confine the employee to the ROPS protected area.

(2) Each seatbelt and seatbelt anchorage must meet the requirements of ANSI/SAE J800 April 1986, Motor Vehicle Seat Belt Assemblies.

(a) Where a suspended seat is used, the seatbelt must be fastened to the movable portion of the seat.

(b) The seatbelt webbing material must be at least as resistant to acids, alkalis, mildew, aging, moisture and sunlight as untreated polyester fiber.

[Statutory Authority: RCW 49.17.040. WSR 98-24-096, § 296-307-08012, filed 12/1/98, effective 3/1/99. WSR 97-09-013, recodified as § 296-307-08012, filed 4/7/97, effective 4/7/97. Statutory Authority: RCW 49.17.040, [49.17.]050 and [49.17.]060. WSR 96-22-048, § 296-306A-08012, filed 10/31/96, effective 12/1/96.]

WAC 296-307-08015 When are ROPS not required on agricultural tractors? ROPS are not required on agricultural tractors that are used as follows:

(1) Low profile tractors used in orchards, vineyards or hop yards where the vertical clearance requirements would substantially interfere with normal operations, and for work related to these uses.

(2) Low profile tractors while used inside a farm building or greenhouse in which the vertical clearance is insufficient to allow a ROPS equipped tractor to operate.

(3) Tractors while used with mounted equipment that is incompatible with ROPS (for example, cornpickers, cotton strippers, vegetable pickers, and fruit harvesters).

(4) Track-type agricultural tractors whose overall width (measured between the outside edges of the tracks) is at least three times the height of the rated center of gravity, and whose rated maximum speed in forward or reverse is not greater than seven miles per hour, when used only for tillage or harvesting operations, and which:

(a) Does not involve operating on slopes in excess of forty percent from horizontal; and

(b) Does not involve operating on piled crop products or residue (for example: Silage in stacks or pits); and

(c) Does not involve operating in close proximity to irrigation ditches, streams or other excavations more than two feet deep that contain slopes of more than forty percent from horizontal; and

(d) Does not involve construction-type operation, such as bulldozing, grading, or land clearing.

[WSR 97-09-013, recodified as § 296-307-08015, filed 4/7/97, effective 4/7/97. Statutory Authority: RCW 49.17.040, [49.17.]050 and [49.17.]060. WSR 96-22-048, § 296-306A-08015, filed 10/31/96, effective 12/1/96.]

WAC 296-307-08018 What employee training requirements apply to ROPS used on agricultural tractors? (1) You must ensure that every employee who operates an agricultural tractor is informed of the operating practices

listed below and of any other practices dictated by the work environment. You must provide the information at the time of initial assignment and at least annually thereafter.

EXHIBIT A

EMPLOYEE OPERATING INSTRUCTIONS

1. Securely fasten your seat belt if the tractor has a ROPS.
2. Where possible, avoid operating the tractor near ditches, embankments and holes.
3. Reduce speed when turning, crossing slopes and on rough, slick or muddy surfaces.
4. Stay off slopes too steep for safe operation.
5. Watch where you are going, especially at row ends, on roads and around trees.
6. Passengers, other than persons required for instruction or machine operation, shall not be permitted to ride on equipment unless a passenger seat or other protective device is provided.
7. Operate the tractor smoothly—no jerky turns, starts, or stops.
8. Hitch only to the drawbar and hitch points recommended by tractor manufacturers.
9. When tractor is stopped, set brakes securely and use park lock if available.

(2) You must ensure that every employee who operates an agriculture tractor is trained specifically in the operation of the tractor to be used. The training must include an orientation of the operator to the topographical features of the land where the tractor will be operated. Training must emphasize safe operating practices to avoid rollover.

(3) The tractor training program must be described in the written accident prevention program required by WAC 296-307-030.

[Statutory Authority: RCW 49.17.040. WSR 98-24-096, § 296-307-08018, filed 12/1/98, effective 3/1/99. WSR 97-09-013, recodified as § 296-307-08018, filed 4/7/97, effective 4/7/97. Statutory Authority: RCW 49.17.040, [49.17.]050 and [49.17.]060. WSR 97-08-051A, § 296-306A-08018, filed 3/31/97, effective 5/1/97; WSR 96-22-048, § 296-306A-08018, filed 10/31/96, effective 12/1/96.]

WAC 296-307-08021 What other requirements apply to ROPS used on agricultural tractors? (1) You must ensure that batteries, fuel tanks, oil reservoirs, and coolant systems are constructed and located or sealed to ensure that no spillage comes in contact with the operator in the event of an upset.

(2) All sharp edges and corners at the operator's station must be designed to minimize operator injury in the event of an upset.

(3) When ROPS are removed, they must be remounted to meet the requirements of WAC 296-307-080.

(4) You must ensure that each ROPS has a label, permanently affixed to the structure, that states:

(a) Manufacturer's or fabricator's name and address;

(b) ROPS model number, if any;

(c) Tractor makes, models, or series numbers that the structure is designed to fit; and

(d) That the ROPS model was tested in accordance with the requirements of this section.

[Statutory Authority: RCW 49.17.040. WSR 98-24-096, § 296-307-08021, filed 12/1/98, effective 3/1/99. WSR 97-09-013, recodified as § 296-307-08021, filed 4/7/97, effective 4/7/97. Statutory Authority: RCW 49.17.040, [49.17.]050 and [49.17.]060. WSR 96-22-048, § 296-306A-08021, filed 10/31/96, effective 12/1/96.]

WAC 296-307-085 When must ROPS be provided for material handling equipment? (1) This section applies to the following types of material handling equipment: Rubber-tired, self-propelled scrapers; rubber-tired front-end loaders; rubber-tired dozers; wheel-type agricultural and industrial tractors; crawler tractors; crawler-type loaders; and motor graders, with or without attachments, that are used in agricultural work. This section does not apply to side-boom pipelaying tractors.

(2) You must ensure that material handling equipment manufactured on or after October 25, 1976, is equipped with ROPS that meet the minimum performance standards of WAC 296-307-08009.

(3) ROPS and supporting attachments must meet the minimum performance standards of OSHA 1928.52 C.F.R., Protective Frames for Wheel Type Agricultural Tractors, or must be designed, fabricated, and installed in a manner that will support, based on the ultimate strength of the metal, at least two times the weight of the prime mover applied at the point of impact.

(a) The ROPS must be designed to minimize the likelihood of a complete overturn and to minimize the possibility of the operator being crushed in a rollover.

(b) The design must provide a vertical clearance of at least fifty-two inches from the work deck to the ROPS at the entrance.

(4) When ROPS are removed, they must be remounted so as to meet the requirements of this section.

(5) Each ROPS must have a label, permanently affixed to the structure, that states:

(a) Manufacturer's or fabricator's name and address;

(b) ROPS model number, if any;

(c) Tractor makes, models, or series numbers that the structure is designed to fit; and

(d) That the ROPS model was tested in accordance with the requirements of this section.

[Statutory Authority: RCW 49.17.040. WSR 98-24-096, § 296-307-085, filed 12/1/98, effective 3/1/99. WSR 97-09-013, recodified as § 296-307-085, filed 4/7/97, effective 4/7/97. Statutory Authority: RCW 49.17.040, [49.17.]050 and [49.17.]060. WSR 96-22-048, § 296-306A-085, filed 10/31/96, effective 12/1/96.]

WAC 296-307-090 What requirements apply to overhead protection for operators of agricultural and industrial tractors? This section applies to wheel-type agricultural tractors used in construction work and to wheel-type industrial tractors used in agriculture work.

(1) If grid or mesh is used for overhead protection, the largest permissible opening is 1.5 in. (38 mm.) in diameter. The overhead protection must not be installed in such a way as to become a hazard in the case of upset.

(2) All equipment used in site clearing operations must have rollover guards meeting the requirements of this chapter. You must ensure that rider-operated equipment is equipped with an overhead and rear canopy guard meeting the following requirements:

(a) The overhead covering is at least eighth-inch steel plate or quarter-inch woven wire mesh with openings no greater than one inch, or equivalent.

(b) The opening in the rear of the canopy structure is covered with not less than quarter-inch woven wire mesh with openings no greater than one inch.

(3) Overhead protection that meets the provisions of SAE Standard J334 (July 1970) for rubber-tired dozers and rubber-tired loaders also meets the requirements of this standard.

[WSR 97-09-013, recodified as § 296-307-090, filed 4/7/97, effective 4/7/97. Statutory Authority: RCW 49.17.040, [49.17.]050 and [49.17.]060. WSR 96-22-048, § 296-306A-090, filed 10/31/96, effective 12/1/96.]

Part G

Field Sanitation

WAC 296-307-095 Field sanitation.

[WSR 97-09-013, recodified as § 296-307-095, filed 4/7/97, effective 4/7/97. Statutory Authority: RCW 49.17.040, [49.17.]050 and [49.17.]060. WSR 96-22-048, § 296-306A-095, filed 10/31/96, effective 12/1/96.]

WAC 296-307-09503 What does this section cover? WAC 296-307-095 applies to any agricultural employer with one or more employees engaged in any hand-labor operations in the field.

EXCEPTION: WAC 296-307-09515 (handwashing facilities) and 296-307-09518 (toilet facilities) do not apply if your employees:

(1) Are engaged in field activities for the production of grains, livestock, or livestock feed; or

(2) Use vehicles, machinery, or animals as part of their field activities and, when needed, can transport themselves to and from toilet and handwashing facilities.

[Statutory Authority: RCW 49.17.040. WSR 98-24-096, § 296-307-09503, filed 12/1/98, effective 3/1/99. WSR 97-09-013, recodified as § 296-307-09503, filed 4/7/97, effective 4/7/97. Statutory Authority: RCW 49.17.040, [49.17.]050 and [49.17.]060. WSR 96-22-048, § 296-306A-09503, filed 10/31/96, effective 12/1/96.]

WAC 296-307-09506 What definitions apply to this section? "Accessible" means a maximum of one-quarter mile or five minutes travel time from the worksite.

"Hand-labor operations" means agricultural operations performed by hand or with hand tools.

For example: The hand cultivation, weeding, planting or harvesting of vegetables, nuts, fruit, seedlings or other crops, including mushrooms, and hand packing into containers.

EXCEPTION: Hand-labor does not include logging operations, the care or feeding of livestock, or hand-labor operations in permanent structures (e.g., canning facilities or packing houses).

"Handwashing facility" means a facility that meets the requirements of WAC 296-307-09515 and is approved by the local health authority.

"Potable water" means water that is suitable for drinking by the public and meets the requirements of chapter 246-290 or 246-291 WAC.

"Toilet" means a fixed or portable facility designed for the purpose of adequate collection and containment of both defecation and urination. "Toilet" includes biological, chemical, flush, and combustion toilets, or sanitary outhouses.

[Statutory Authority: RCW 49.17.010, 49.17.040, 49.17.050, 49.17.060 and chapter 49.17 RCW. WSR 12-24-071, § 296-307-09506, filed 12/4/12, effective 1/4/13. Statutory Authority: RCW 49.17.040. WSR 98-24-096, § 296-307-09506, filed 12/1/98, effective 3/1/99. WSR 97-09-013, recodified as § 296-307-09506, filed 4/7/97, effective 4/7/97. Statutory Authority: RCW 49.17.040, [49.17.]050 and [49.17.]060. WSR 96-22-048, § 296-306A-09506, filed 10/31/96, effective 12/1/96.]

WAC 296-307-09509 What orientation must employers provide for field sanitation? You must provide each employee with verbal orientation on field sanitation facilities. The orientation must be understandable to each employee and must include:

(1) The location of potable water supplies and the importance of drinking water frequently, especially on hot days;

(2) Identification of all nonpotable water at the worksite and prohibition of the use of nonpotable water for sanitation purposes with an explanation of the hazards associated with using nonpotable water;

(3) The location of handwashing facilities and the importance of handwashing:

(a) Before and after using the toilet; and

(b) Before eating and smoking; and

(4) The location of toilet facilities; an explanation that facilities are for employee convenience and health considerations; the necessity to keep them sanitary; and that using the fields, orchards, or forests is not an option.

[Statutory Authority: RCW 49.17.040. WSR 98-24-096, § 296-307-09509, filed 12/1/98, effective 3/1/99. WSR 97-09-013, recodified as § 296-307-09509, filed 4/7/97, effective 4/7/97. Statutory Authority: RCW 49.17.040, [49.17.]050 and [49.17.]060. WSR 96-22-048, § 296-306A-09509, filed 10/31/96, effective 12/1/96.]

WAC 296-307-09512 What potable water sources must an employer provide? You must provide potable water for employees engaged in hand-labor operations in the field, without cost to the employee. Potable water must meet the following requirements:

(1) Potable water is in locations that are accessible to all employees.

(2) Potable water containers are refilled daily or more often as necessary.

(3) Potable water dispensers are designed, constructed, and serviced so that sanitary conditions are maintained. They are closeable and equipped with a tap.

(4) Open containers such as barrels, pails, or tanks for drinking water from which water must be dipped or poured, whether or not they are fitted with a cover, are prohibited.

(5) Any container used to distribute drinking water is clearly marked in English and with the appropriate international symbol describing its contents.

(6) Any container used to distribute drinking water is only used for that purpose.

(7) Potable water is suitably cool and provided in sufficient amounts, taking into account the air temperature, humidity, and the nature of the work performed, to meet employees' needs.

Note: Suitably cool water should be sixty degrees Fahrenheit or less. During hot weather, employees may require up to three gallons of water per day. Additional requirements may be found in the outdoor heat exposure standard in Part G-1, WAC 296-307-09740 Drinking water, which applies between May 1st and September 30th of each year.

(8) The use of common drinking cups or dippers is prohibited. Water is dispensed in single-use drinking cups, personal containers, or by water fountains.

"Single-use drinking cups" means containers of any type or size, disposable or not, and including personal containers if the choice to use a personal container is made by the employee, not the employer.

(9) Employees must be prohibited from drinking from irrigation ditches, creeks or rivers. Potable water must meet the quality standards for drinking purposes of the state or local authority, or must meet quality standards of the United States Environmental Protection Agency's National Interim —Primary Drinking Water Regulations, published in 40 C.F.R. Part 141 and 40 C.F.R. 147.2400.

[Statutory Authority: RCW 49.17.010, 49.17.040, 49.17.050, and 49.17.060. WSR 09-07-098, § 296-307-09512, filed 3/18/09, effective 5/1/09. WSR 97-09-013, recodified as § 296-307-09512, filed 4/7/97, effective 4/7/97. Statutory Authority: RCW 49.17.040, [49.17.]050 and [49.17.]060. WSR 96-22-048, § 296-306A-09512, filed 10/31/96, effective 12/1/96.]

WAC 296-307-09515 What handwashing facilities must an employer provide? You must provide handwashing facilities for employees engaged in hand-labor operations in the field, without cost to the employee. Handwashing facilities must meet the following requirements:

(1) One handwashing facility with a tap and an adequate supply of water, soap, single-use hand towels, and either a basin or other suitable container for washing is provided for each twenty employees or fraction of twenty.

Note: Nonpotable water must not be used for washing any part of a person, except as permitted by the local health authority.

(2) Each facility has running water.

(3) Each facility has a dispenser containing handsoap or a similar cleansing agent.

(4) Each facility has individual single-use hand towels.

(5) Facilities are maintained in a clean and sanitary condition according to appropriate public health sanitation practices.

(6) Waste receptacles are provided. Disposal of wastes from the facilities does not create a hazard nor cause an unsanitary condition.

(7) Employees are allowed reasonable time during the work period to use the facilities.

(8) Handwashing facilities are near toilet facilities and within one-quarter mile of each employee's worksite in the field.

Exception: Where it is not feasible to locate facilities as required above, the facilities must be located at the point of closest vehicular access.

[WSR 97-09-013, recodified as § 296-307-09515, filed 4/7/97, effective 4/7/97. Statutory Authority: RCW 49.17.040, [49.17.]050 and [49.17.]060. WSR 96-22-048, § 296-306A-09515, filed 10/31/96, effective 12/1/96.]

WAC 296-307-09518 What toilet facilities must an employer provide? You must provide toilet facilities for employees engaged in hand-labor operations in the field, without cost to the employee. Toilet facilities must meet the following requirements:

(1) One toilet facility is provided for each twenty employees or fraction of twenty.

(2) You must ensure, at the beginning of each day, that the toilets are inspected. If any toilet facility fails to meet the requirements of this section, immediate corrective action is taken. Inspections are documented and the record maintained at the worksite for at least seventy-two hours.

(3) Toilet facilities are adequately ventilated; appropriately screened, and have self-closing doors that can be closed and latched from the inside. Toilet facilities are constructed to ensure privacy.

(4) Facilities are maintained in a clean, sanitary, and functional condition and according to appropriate public health sanitation practices.

(5) Toilets are supplied with toilet paper.

(6) Disposal of wastes from the facilities does not create a hazard or cause an unsanitary condition.

(7) Employees are allowed reasonable time during the work period to use the facilities.

(8) Facilities are near handwashing facilities and within one-quarter mile of each employee's worksite in the field.

Exception: Where it is not feasible to locate facilities as required above, the facilities must be located at the point of closest vehicular access.

[WSR 97-09-013, recodified as § 296-307-09518, filed 4/7/97, effective 4/7/97. Statutory Authority: RCW 49.17.040, [49.17.]050 and [49.17.]060. WSR 96-22-048, § 296-306A-09518, filed 10/31/96, effective 12/1/96.]

PART G-1

WAC 296-307-097 Outdoor heat exposure.

[Statutory Authority: RCW 49.17.010, 49.17.040, 49.17.050, and 49.17.060. WSR 09-07-098, § 296-307-097, filed 3/18/09, effective 5/1/09.]

WAC 296-307-09710 Scope and purpose. (1) WAC 296-307-097 through 296-307-09760 applies to all employers with employees performing work in an outdoor environment.

(2) The requirements of WAC 296-307-097 through 296-307-09760 apply to outdoor work environments from May 1 through September 30, annually, only when employees are exposed to outdoor heat at or above an applicable temperature listed in Table 1.

Table 1

To determine which temperature applies to each worksite, select the temperature associated with the general type of clothing or personal protective equipment (PPE) each employee is required to wear.

Outdoor Temperature Action Levels

All other clothing	89°
Double-layer woven clothes including coveralls, jackets and sweatshirts	77°
Nonbreathing clothes including vapor barrier clothing or PPE such as chemical resistant suits	52°

Note: There is no requirement to maintain temperature records. The temperatures in Table 1 were developed based on Washington state data and are not applicable to other states.

(3) WAC 296-307-097 through 296-307-09760 does not apply to incidental exposure which exists when an employee is not required to perform a work activity outdoors for more

than fifteen minutes in any sixty-minute period. This exception may be applied every hour during the work shift.

(4) WAC 296-307-097 through 296-307-09760 supplement all industry-specific standards with related requirements. Where the requirements under these sections provide more specific or greater protection than the industry-specific standards, the employer shall comply with the requirements under these sections. Additional related requirements are found in chapter 296-305 WAC, Safety standards for firefighters and chapter 296-307 WAC, Safety standards for agriculture.

[Statutory Authority: RCW 49.17.010, 49.17.040, 49.17.050, and 49.17.060. WSR 09-07-098, § 296-307-09710, filed 3/18/09, effective 5/1/09.]

WAC 296-307-09720 Definitions. (1) **Acclimatization** means the body's temporary adaptation to work in heat that occurs as a person is exposed to it over time.

(2) **Double-layer woven clothing** means clothing worn in two layers allowing air to reach the skin. For example, coveralls worn on top of regular work clothes.

(3) **Drinking water** means potable water that is suitable to drink. Drinking water packaged as a consumer product and electrolyte-replenishing beverages (i.e., sports drinks) that do not contain caffeine are acceptable.

(4) **Engineering controls** means the use of devices to reduce exposure and aid cooling (i.e., air conditioning).

(5) **Environmental factors for heat-related illness** means working conditions that increase susceptibility for heat-related illness such as air temperature, relative humidity, radiant heat from the sun and other sources, conductive heat sources such as the ground, air movement, workload (i.e., heavy, medium, or low) and duration, and personal protective equipment worn by employees. Measurement of environmental factors is not required by WAC 296-307-097.

(6) **Heat-related illness** means a medical condition resulting from the body's inability to cope with a particular heat load, and includes, but is not limited to, heat cramps, heat rash, heat exhaustion, fainting, and heat stroke.

(7) **Outdoor environment** means an environment where work activities are conducted outside. Work environments such as inside vehicle cabs, sheds, and tents or other structures may be considered an outdoor environment if the environmental factors affecting temperature are not managed by engineering controls. Construction activity is considered to be work in an indoor environment when performed inside a structure after the outside walls and roof are erected.

(8) **Vapor barrier clothing** means clothing that significantly inhibits or completely prevents sweat produced by the body from evaporating into the outside air. Such clothing includes encapsulating suits, various forms of chemical resistant suits used for PPE, and other forms of nonbreathing clothing.

[Statutory Authority: RCW 49.17.010, 49.17.040, 49.17.050, and 49.17.060. WSR 09-07-098, § 296-307-09720, filed 3/18/09, effective 5/1/09.]

WAC 296-307-09730 Employer and employee responsibility. (1) Employers of employees exposed at or above temperatures listed in WAC 296-307-09710(2) Table 1 must:

(a) Address their outdoor heat exposure safety program in their written accident prevention program (APP); and

(b) Encourage employees to frequently consume water or other acceptable beverages to ensure hydration.

(2) Employees are responsible for monitoring their own personal factors for heat-related illness including consumption of water or other acceptable beverages to ensure hydration.

[Statutory Authority: RCW 49.17.010, 49.17.040, 49.17.050, and 49.17.060. WSR 09-07-098, § 296-307-09730, filed 3/18/09, effective 5/1/09.]

WAC 296-307-09740 Drinking water. (1) Keeping workers hydrated in a hot outdoor environment requires that more water be provided than at other times of the year. Federal OSHA and research indicate that employers should be prepared to supply at least one quart of drinking water per employee per hour. When employee exposure is at or above an applicable temperature listed in WAC 296-307-09710(2) Table 1:

(a) Employers must ensure that a sufficient quantity of drinking water is readily accessible to employees at all times; and

(b) Employers must ensure that all employees have the opportunity to drink at least one quart of drinking water per hour.

(2) Employers are not required to supply the entire quantity of drinking water needed to be supplied for all employees on a full shift at the beginning of the shift. Employers may begin the shift with smaller quantities of drinking water if effective procedures are established for replenishment during the shift.

[Statutory Authority: RCW 49.17.010, 49.17.040, 49.17.050, and 49.17.060. WSR 09-07-098, § 296-307-09740, filed 3/18/09, effective 5/1/09.]

WAC 296-307-09750 Responding to signs and symptoms of heat-related illness. (1) Employees showing signs or demonstrating symptoms of heat-related illness must be relieved from duty and provided with a sufficient means to reduce body temperature.

(2) Employees showing signs or demonstrating symptoms of heat-related illness must be monitored to determine whether medical attention is necessary.

[Statutory Authority: RCW 49.17.010, 49.17.040, 49.17.050, and 49.17.060. WSR 09-07-098, § 296-307-09750, filed 3/18/09, effective 5/1/09.]

WAC 296-307-09760 Information and training. All training must be provided to employees and supervisors, in a language the employee or supervisor understands, prior to outdoor work which exceeds a temperature listed in WAC 296-307-09710(2) Table 1, and at least annually thereafter.

(1) Employee training. Training on the following topics must be provided to all employees who may be exposed to outdoor heat at or above the temperatures listed in WAC 296-307-09710(2) Table 1:

(a) The environmental factors that contribute to the risk of heat-related illness;

(b) General awareness of personal factors that may increase susceptibility to heat-related illness including, but not limited to, an individual's age, degree of acclimatization, medical conditions, drinking water consumption, alcohol use, caffeine use, nicotine use, and use of medications that affect

the body's responses to heat. This information is for the employee's personal use;

(c) The importance of removing heat-retaining personal protective equipment such as nonbreathable chemical resistant clothing during all breaks;

(d) The importance of frequent consumption of small quantities of drinking water or other acceptable beverages;

(e) The importance of acclimatization;

(f) The different types of heat-related illness, the common signs and symptoms of heat-related illness; and

(g) The importance of immediately reporting signs or symptoms of heat-related illness in either themselves or in co-workers to the person in charge and the procedures the employee must follow including appropriate emergency response procedures.

(2) Supervisor training. Prior to supervising employees working in outdoor environments with heat exposure at or above the temperature levels listed in WAC 296-307-09710 (2) Table 1, supervisors must have training on the following topics:

(a) The information required to be provided to employees listed in subsection (1) of this section;

(b) The procedures the supervisor must follow to implement the applicable provisions of WAC 296-307-097 through 296-307-09760;

(c) The procedures the supervisor must follow if an employee exhibits signs or symptoms consistent with possible heat-related illness, including appropriate emergency response procedures; and

(d) Procedures for moving or transporting an employee(s) to a place where the employee(s) can be reached by an emergency medical service provider, if necessary.

[Statutory Authority: RCW 49.17.010, 49.17.040, 49.17.050, and 49.17.060. WSR 09-07-098, § 296-307-09760, filed 3/18/09, effective 5/1/09.]

Part H

Personal Protective Equipment

WAC 296-307-100 Personal protective equipment.

[WSR 97-09-013, recodified as § 296-307-100, filed 4/7/97, effective 4/7/97. Statutory Authority: RCW 49.17.040, [49.17.]050 and [49.17.]060. WSR 96-22-048, § 296-306A-100, filed 10/31/96, effective 12/1/96.]

WAC 296-307-10005 Who must provide personal protective equipment? (1) You must ensure that employees are protected from injury or impairment of any bodily function that might occur through absorption, inhalation or physical contact of any substance, vapor, radiation, or physical hazard. Wherever appropriate, you must ensure that employees use protective clothing; respiratory devices; shields; barriers; and adequate protective equipment for eyes, face, head, and extremities.

(2) You must provide personal protective equipment at no cost to employees, including replacement due to normal wear and tear. The equipment must be maintained in sanitary and reliable condition.

Exception: You may require employees to provide their own normal work clothing, including long-sleeved shirts, long-legged pants, and socks.

(3) If employees provide their own protective equipment, then you must ensure that the equipment is adequate, properly maintained, and sanitary.

[WSR 97-09-013, recodified as § 296-307-10005, filed 4/7/97, effective 4/7/97. Statutory Authority: RCW 49.17.040, [49.17.]050 and [49.17.]060. WSR 96-22-048, § 296-306A-10005, filed 10/31/96, effective 12/1/96.]

WAC 296-307-10010 What requirements apply to eye protection? You must require eye protection wherever employees are exposed to flying objects, welding or cutting glare, injurious liquids, or injurious radiation. Eye protectors must meet the criteria of the American National Standard for Occupational and Educational Eye and Face Protection.

[WSR 97-09-013, recodified as § 296-307-10010, filed 4/7/97, effective 4/7/97. Statutory Authority: RCW 49.17.040, [49.17.]050 and [49.17.]060. WSR 96-22-048, § 296-306A-10010, filed 10/31/96, effective 12/1/96.]

WAC 296-307-10015 How must personal protective equipment be used? (1) You must ensure that employees use personal protective equipment according to the manufacturer's instructions.

(2) You must ensure that, before each use, employees inspect all personal protective equipment for leaks, holes, tears, or worn places, and any damaged equipment is repaired or discarded.

(3) The employee must use personal protective equipment according to instructions and training received.

(4) The employee shall notify you of any defects in personal protective equipment or when the equipment becomes contaminated.

[WSR 97-09-013, recodified as § 296-307-10015, filed 4/7/97, effective 4/7/97. Statutory Authority: RCW 49.17.040, [49.17.]050 and [49.17.]060. WSR 96-22-048, § 296-306A-10015, filed 10/31/96, effective 12/1/96.]

WAC 296-307-10020 What must an employer do to prevent heat-related illness? You must take appropriate measures to prevent heat-related illness that may be caused by employees wearing any required personal protective equipment.

[WSR 97-09-013, recodified as § 296-307-10020, filed 4/7/97, effective 4/7/97. Statutory Authority: RCW 49.17.040, [49.17.]050 and [49.17.]060. WSR 96-22-048, § 296-306A-10020, filed 10/31/96, effective 12/1/96.]

WAC 296-307-10025 What instruction on personal protective equipment must an employer give to employees? You must instruct each employee in the proper use of personal protective equipment. The instruction must include any special limitations or precautions indicated by the manufacturer.

[WSR 97-09-013, recodified as § 296-307-10025, filed 4/7/97, effective 4/7/97. Statutory Authority: RCW 49.17.040, [49.17.]050 and [49.17.]060. WSR 96-22-048, § 296-306A-10025, filed 10/31/96, effective 12/1/96.]

Part I

Pesticides

(Worker Protection Standard)

WAC 296-307-107 Federal worker protection standards—Washington state department of agriculture. This chapter contains the federal Environmental Protection

Agency worker protection standards as listed in 40 C.F.R., Part 170. Revisions to the federal language have been incorporated into this chapter in order to be consistent with other requirements of Washington state law. These rules are adopted in conjunction with rules adopted by the Washington state department of labor and industries in chapter 296-307 WAC, Part I.

[Statutory Authority: RCW 49.17.050. WSR 09-17-119, § 296-307-107, filed 8/18/09, effective 10/1/09. Statutory Authority: RCW 49.17.040. WSR 98-24-096, § 296-307-107, filed 12/1/98, effective 3/1/99. WSR 97-09-013, recodified as § 296-307-107, filed 4/7/97, effective 4/7/97. Statutory Authority: RCW 49.17.040, [49.17.]050 and [49.17.]060. WSR 96-20-082, § 296-306A-107, filed 9/30/96, effective 11/1/96.]

WAC 296-307-110 Scope and purpose—Worker protection standards—40 C.F.R., § 170.1. This part contains standards designed to reduce the risks of illness or injury resulting from workers' and handlers' occupational exposures to pesticides used in the production of agricultural plants on farms or in nurseries, greenhouses, and forests and also to reduce the accidental exposure of workers and other persons to such pesticides. It requires workplace practices designed to reduce or eliminate exposure to pesticides and establishes procedures for responding to exposure-related emergencies.

[WSR 97-09-013, recodified as § 296-307-110, filed 4/7/97, effective 4/7/97. Statutory Authority: RCW 49.17.040, [49.17.]050 and [49.17.]060. WSR 96-20-082, § 296-306A-110, filed 9/30/96, effective 11/1/96.]

WAC 296-307-11005 Definitions—Worker protection standards—40 C.F.R., § 170.3. Terms used in this part have the same meanings they have in the Federal Insecticide, Fungicide, and Rodenticide Act, as amended. In addition, the following terms, when used in this part, shall have the following meanings:

"Agricultural emergency" means a sudden occurrence or set of circumstances which the agricultural employer could not have anticipated and over which the agricultural employer has no control, and which requires entry into a pesticide treated area during a restricted-entry interval, when no alternative practices would prevent or mitigate a substantial economic loss.

"Agricultural employer" means any person who hires or contracts for the services of workers, for any type of compensation, to perform activities related to the production of agricultural plants, or any person who is an owner of or is responsible for the management or condition of an agricultural establishment that uses such workers.

Note: This definition does not conflict with the definition of employer in WAC 296-307-012.

"Agricultural establishment" means any farm, forest, nursery, or greenhouse.

"Agricultural plant" means any plant grown or maintained for commercial or research purposes and includes, but is not limited to, food, feed, and fiber plants; trees; turfgrass; flowers, shrubs; ornamentals; and seedlings.

"Animal premise" means the actual structure used to house, cage or confine animals such as: Barns, poultry houses, mink sheds, corrals, or structures used for shelter.

"Chemigation" means the application of pesticides through irrigation systems.

"Commercial pesticide handling establishment" means any establishment, other than an agricultural establishment, that:

• Employs any person, including a self-employed person, to apply on an agricultural establishment, pesticides used in the production of agricultural plants.

• Employs any person, including a self-employed person, to perform on an agricultural establishment, tasks as a crop advisor.

"Crop advisor" means any person who is assessing pest numbers or damage, pesticide distribution, or the status or requirements of agricultural plants and who holds a current Washington state department of agriculture commercial consultant license in the agricultural areas in which they are advising. The term does not include any person who is performing hand labor tasks.

"Early entry" means entry by a worker into a treated area on the agricultural establishment after a pesticide application is complete, but before any restricted-entry interval for the pesticide has expired.

"Farm" means any operation, other than a nursery or forest, engaged in the outdoor production of agricultural plants.

"Forest" means any operation engaged in the outdoor production of any agricultural plant to produce wood fiber or timber products.

"Fumigant" means any pesticide product that is a vapor or gas, or forms a vapor or gas on application, and whose method of pesticidal action is through the gaseous state.

"Greenhouse" means any operation engaged in the production of agricultural plants inside any structure or space that is enclosed with nonporous covering and that is of sufficient size to permit worker entry. This term includes, but is not limited to, polyhouses, mushroom houses, rhubarb houses, and similar structures. It does not include such structures as malls, atriums, conservatories, arboretums, or office buildings where agricultural plants are present primarily for aesthetic or climatic modification.

"Hand labor" means any agricultural activity performed by hand or with hand tools that causes a worker to have substantial contact with surfaces (such as plants, plant parts, or soil) that may contain pesticide residues. These activities include, but are not limited to, harvesting, detasseling, thinning, weeding, topping, planting, sucker removal, pruning, disbudding, roguing, and packing produce into containers in the field. Hand labor does not include operating, moving, or repairing irrigation or watering equipment or performing the tasks of crop advisors.

"Handler" means any person, including a self-employed person:

• Who is employed for any type of compensation by an agricultural establishment or commercial pesticide handling establishment to which WAC 296-307-130 applies and who is:

■ Mixing, loading, transferring, or applying pesticides.

■ Disposing of pesticides or pesticide containers.

■ Handling opened containers of pesticides.

■ Acting as a flagger.

■ Cleaning, adjusting, handling, or repairing the parts of mixing, loading, or application equipment that may contain pesticide residues.

■ Assisting with the application of pesticides.

■ Entering a greenhouse or other enclosed area after the application and before the inhalation exposure level listed in the labeling has been reached or one of the ventilation criteria established by WAC 296-307-12015 (3)(c) or in the labeling has been met:

♦ To operate ventilation equipment.

♦ To adjust or remove coverings used in fumigation.

♦ To monitor air levels.

■ Entering a treated area outdoors after application of any soil fumigant to adjust or remove soil coverings such as tarpaulins.

■ Performing tasks as a crop advisor:

♦ During any pesticide application.

♦ Before the inhalation exposure level listed in the labeling has been reached or one of the ventilation criteria established by WAC 296-307-12015 (3)(c) or in the labeling has been met.

♦ During any restricted-entry interval.

• The term does not include any person who is only handling pesticide containers that have been emptied or cleaned according to pesticide product labeling instructions or, in the absence of such instructions, have been subjected to triple-rinsing or its equivalent.

"Handler employer" means any person who is self-employed as a handler or who employs any handler, for any type of compensation.

"Immediate family" includes only spouse, children, stepchildren, foster children, parents, stepparents, foster parents, brothers, and sisters.

"Nursery" means any operation engaged in the outdoor production of any agricultural plant to produce cut flowers and ferns or plants that will be used in their entirety in another location. Such plants include, but are not limited to, flowering and foliage plants or trees; tree seedlings; live Christmas trees; vegetable, fruit, and ornamental transplants; and turfgrass produced for sod.

"Owner" means any person who has a present possessory interest (fee, leasehold, rental, or other) in an agricultural establishment covered by this chapter. A person who has both leased such agricultural establishment to another person and granted that same person the right and full authority to manage and govern the use of such agricultural establishment is not an owner for purposes of this part.

"Restricted-entry interval" means the time after the end of a pesticide application during which entry into the treated area is restricted.

"Substantial economic loss" means a loss in profitability greater than that which would be expected based on the experience and fluctuations of crop yields in previous years. Only losses caused by the agricultural emergency specific to the affected site and geographic area are considered. The contribution of mismanagement cannot be considered in determining the loss.

"Treated area" means any area to which a pesticide is being directed or has been directed.

"Worker" means any person, including a self-employed person, who is employed for any type of compensation and who is performing activities relating to the production of agricultural plants on an agricultural establishment to which WAC 296-307-120 applies. While persons employed by a commercial pesticide handling establishment are performing tasks as crop advisors, they are not workers covered by the requirements of WAC 296-307-120.

[Statutory Authority: RCW 49.17.040. WSR 98-24-096, § 296-307-11005, filed 12/1/98, effective 3/1/99. WSR 97-09-013, recodified as § 296-307-11005, filed 4/7/97, effective 4/7/97. Statutory Authority: RCW 49.17.040, [49.17.]050 and [49.17.]060. WSR 96-20-082, § 296-306A-11005, filed 9/30/96, effective 11/1/96.]

WAC 296-307-11010 General duties and prohibited actions—Worker protection standards—40 C.F.R., § 170.7. (1) General duties. The agricultural employer or the handler employer, as appropriate, shall:

(a) Assure that each worker subject to WAC 296-307-120 or each handler subject to WAC 296-307-130 receives the protections required by this part.

(b) Assure that any pesticide to which WAC 296-307-130 applies is used in a manner consistent with the labeling of the pesticide, including the requirements of this part.

(c) Provide, to each person who supervises any worker or handler, information and directions sufficient to assure that each worker or handler receives the protections required by this part. Such information and directions shall specify which persons are responsible for actions required to comply with this part.

(d) Require each person who supervises any worker or handler to assure compliance by the worker or handler with the provisions of this part and to assure that the worker or handler receives the protections required by this part.

(2) Prohibited actions. The agricultural employer or the handler employer shall not take any retaliatory action for attempts to comply with this part or any action having the effect of preventing or discouraging any worker or handler from complying or attempting to comply with any requirement of this part.

[Statutory Authority: RCW 49.17.040. WSR 98-24-096, § 296-307-11010, filed 12/1/98, effective 3/1/99. WSR 97-09-013, recodified as § 296-307-11010, filed 4/7/97, effective 4/7/97. Statutory Authority: RCW 49.17.040, [49.17.]050 and [49.17.]060. WSR 96-20-082, § 296-306A-11010, filed 9/30/96, effective 11/1/96.]

WAC 296-307-11015 Violations of this part—Worker protection standards—40 C.F.R., § 170.9. (1) RCW 15.58.150 (2)(c) provides that it is unlawful for any person ". . . to use or cause to be used any pesticide contrary to label directions . . .." When 40 C.F.R., Part 170 is referenced on a label, users must comply with all of its requirements except those that are inconsistent with product specific instructions on the labeling. For purposes of this chapter, the term "use" is interpreted to include:

(a) Preapplication activities, including, but not limited to:

(i) Arranging for the application of the pesticide;

(ii) Mixing and loading the pesticide; and

(iii) Making necessary preparations for the application of the pesticide, including responsibilities related to worker notification, training of handlers, decontamination, use and care of personal protective equipment, emergency information, and heat stress management.

Note: Additional requirements in WAC 296-307-097, Outdoor heat exposure, may apply between May 1st and September 30th of each year. See Part G-1.

(b) Application of the pesticide.

(c) Post-application activities necessary to reduce the risks of illness and injury resulting from handlers' and workers' occupational exposures to pesticide residues during the restricted-entry interval plus thirty days. These activities include, but are not limited to, responsibilities related to worker training, notification, and decontamination.

(d) Other pesticide-related activities, including, but not limited to, providing emergency assistance, transporting or storing pesticides that have been opened, and disposing of excess pesticides, spray mix, equipment wash waters, pesticide containers, and other pesticide-containing materials.

(2) A person who has a duty under this chapter, as referenced on the pesticide product label, and who fails to perform that duty, violates RCW 15.58.330 and 17.21.315, and is subject to civil penalties under RCW 15.58.335, 15.58.260 and 17.21.315.

(3) FIFRA section 14 (b)(4) provides that a person is liable for a penalty under FIFRA if another person employed by or acting for that person violates any provision of FIFRA. The term "acting for" includes both employment and contractual relationships.

(4) The requirements of this chapter, including the decontamination requirements, shall not, for the purposes of section 653 (b)(1) of Title 29 of the U.S. Code, be deemed to be the exercise of statutory authority to prescribe or enforce standards or regulations affecting the general sanitary hazards addressed by Field Sanitation, WAC 296-307-095, or other agricultural, nonpesticide hazards.

[Statutory Authority: RCW 49.17.010, 49.17.040, 49.17.050, and 49.17.060. WSR 09-07-098, § 296-307-11015, filed 3/18/09, effective 5/1/09; WSR 05-01-166, § 296-307-11015, filed 12/21/04, effective 4/2/05. WSR 97-09-013, recodified as § 296-307-11015, filed 4/7/97, effective 4/7/97. Statutory Authority: RCW 49.17.040, [49.17.]050 and [49.17.]060. WSR 96-20-082, § 296-306A-11015, filed 9/30/96, effective 11/1/96.]

Standard for Workers

WAC 296-307-120 Applicability of this section—Standards for workers—40 C.F.R., § 170.102. Requirement. Except as provided by WAC 296-307-12005 and 296-307-12010, WAC 296-307-120 applies when any pesticide product is used on an agricultural establishment in the production of agricultural plants.

[Statutory Authority: RCW 49.17.040. WSR 98-24-096, § 296-307-120, filed 12/1/98, effective 3/1/99. WSR 97-09-013, recodified as § 296-307-120, filed 4/7/97, effective 4/7/97. Statutory Authority: RCW 49.17.040, [49.17.]050 and [49.17.]060. WSR 96-20-082, § 296-306A-120, filed 9/30/96, effective 11/1/96.]

WAC 296-307-12005 Exceptions—Standards for workers—40 C.F.R., § 170.103. This section does not apply when any pesticide is applied on an agricultural establishment in the following circumstances:

(1) For mosquito abatement, Mediterranean fruit fly eradication, or similar wide-area public pest control programs sponsored by governmental entities.

(2) On livestock or other animals, or in or about animal premises.

(3) On plants grown for other than commercial or research purposes, which may include plants in habitations, home fruit and vegetable gardens, and home greenhouses.

(4) On plants that are in ornamental gardens, parks, and public or private lawns and grounds that are intended only for aesthetic purposes or climatic modification.

(5) By injection directly into agricultural plants. Direct injection does not include "hack and squirt," "frill and spray," chemigation, soil-incorporation, or soil-injection.

(6) In a manner not directly related to the production of agricultural plants, including, but not limited to, structural pest control, control of vegetation along rights of way and in other noncrop areas, and pasture and rangeland use.

(7) For control of vertebrate pests.

(8) As attractants or repellents in traps.

(9) On the harvested portions of agricultural plants or on harvested timber.

(10) For research uses of unregistered pesticides.

[WSR 97-09-013, recodified as § 296-307-12005, filed 4/7/97, effective 4/7/97. Statutory Authority: RCW 49.17.040, [49.17.]050 and [49.17.]060. WSR 96-20-082, § 296-306A-12005, filed 9/30/96, effective 11/1/96.]

WAC 296-307-12010 Exemptions—Standards for workers—40 C.F.R., § 170.104. The workers listed in this section are exempt from the specified provisions of WAC 296-307-120.

(1) Owners of agricultural establishments.

(a) The owner of an agricultural establishment is not required to provide to himself/herself or members of his/her immediate family who are performing tasks related to the production of agricultural plants on their own agricultural establishment the protections of:

(i) WAC 296-307-12020 (3)(e) through (i);

(ii) WAC 296-307-12020 (3)(e) through (i); as referenced in WAC 296-307-12020 (4)(b)(iii) and (5);

(iii) WAC 296-307-12025;

(iv) WAC 296-307-12030;

(v) WAC 296-307-12040;

(vi) WAC 296-307-12045;

(vii) WAC 296-307-12050;

(viii) WAC 296-307-12055.

(b) The owner of the agricultural establishment must provide the protections listed in (a)(i) through (viii) of this subsection to other workers and other persons who are not members of his/her immediate family.

(2) Crop advisors.

(a) Provided that the conditions of this section are met, a person who is certified or licensed as a crop advisor by a program acknowledged as appropriate in writing by EPA or a state or tribal lead agency for pesticide enforcement, and persons performing crop advising tasks under such qualified crop advisor's direct supervision, are exempt from the provisions of:

(i) WAC 296-307-12050.

(ii) WAC 296-307-12055.

A person is under the direct supervision of a crop advisor when the crop advisor exerts the supervisory controls set out in (b)(iii) and (iv) of this subsection. Direct supervision does not require that the crop advisor be physically present at all times, but the crop advisor must be readily accessible to the employees at all times.

(b) Conditions of exemption.

(i) The certification or licensing program requires pesticide safety training that includes, at least, all the information in WAC 296-307-13025 (3)(d).

(ii) Applies only when performing crop advising tasks in the treated area.

(iii) The crop advisor must make specific determinations regarding the appropriate PPE, appropriate decontamination supplies, and how to conduct the tasks safely. The crop advisor must convey this information to each person under his direct supervision in a language that the person understands.

(iv) Before entering a treated area, the certified or licensed crop advisor must inform, through an established practice of communication, each person under his/her direct supervision of the pesticide product and active ingredient(s) applied, method of application, time of application, the restricted entry interval which tasks to undertake, and how to contact the crop advisor.

[Statutory Authority: RCW 49.17.040. WSR 98-24-096, § 296-307-12010, filed 12/1/98, effective 3/1/99. WSR 97-09-013, recodified as § 296-307-12010, filed 4/7/97, effective 4/7/97. Statutory Authority: RCW 49.17.040, [49.17.]050 and [49.17.]060. WSR 96-20-082, § 296-306A-12010, filed 9/30/96, effective 11/1/96.]

WAC 296-307-12015 Restrictions associated with pesticide applications—Standards for workers—40 C.F.R., § 170.110. (1) Farms and forests. During the application of any pesticide on a farm or in a forest, the agricultural employer shall not allow or direct any person, other than an appropriately trained and equipped handler, to enter or to remain in the treated area.

(2) Nurseries. In a nursery, during any pesticide application described in column A of Table 1 of this section, the agricultural employer shall not allow or direct any person, other than an appropriately trained and equipped handler, to enter or to remain in the area specified in column B of Table 1 of this section. After the application is completed, until the end of any restricted-entry interval, the entry-restricted area is the treated area.

Table 1.—Entry-Restricted Areas in Nurseries During Pesticide Applications

A. During Application of a Pesticide:	B. Workers are Prohibited in:
(1)(a) Applied: (i) Aerially, or (ii) In an upward direction, or (iii) Using a spray pressure greater than 150 psi, or	Treated area plus 100 feet in all directions on the nursery
(b) Applied as a: (i) Fumigant, or (ii) Smoke, or (iii) Mist, or (iv) Fog, or (v) Aerosol.	
(2)(a) Applied downward using: (i) A height of greater than 12 inches from the planting medium, or (ii) A fine spray, or (iii) A spray pressure greater than 40 psi and less than 150 psi.	Treated area plus 25 feet in all directions on the nursery
(b) Not as in 1 or 2(a) above but for which a respiratory protection device is required for application by the product labeling.	
(3) Applied otherwise.	Treated area

(3) Greenhouses.

(a) When a pesticide application described in column A of Table 2 under (d) of this subsection takes place in a greenhouse, the agricultural employer shall not allow or direct any person, other than an appropriately trained and equipped handler, to enter or to remain in the area specified in column B of Table 2 until the time specified in column C of Table 2 has expired.

(b) After the time specified in column C of Table 2 under (d) of this subsection has expired, until the expiration of any restricted-entry interval, the agricultural employer shall not allow or direct any worker to enter or to remain in the treated area as specified in column D of Table 2 under (d) of this subsection, except as provided in WAC 296-307-12020.

(c) When column C of Table 2 under (d) of this subsection specifies that ventilation criteria must be met, ventilation shall continue until the air concentration is measured to be equal to or less than the inhalation exposure level the labeling requires to be achieved. If no inhalation exposure level is listed on the labeling, ventilation shall continue until after:

(i) Ten air exchanges are completed; or

(ii) Two hours of ventilation using fans or other mechanical ventilating systems; or

(iii) Four hours of ventilation using vents, windows or other passive ventilation; or

(iv) Eleven hours with no ventilation followed by one hour of mechanical ventilation; or

(v) Eleven hours with no ventilation followed by two hours of passive ventilation; or

(vi) Twenty-four hours with no ventilation.

(d) The following Table 2 applies to (a), (b) and (c) of this subsection.

Table 2.—Greenhouse Entry Restrictions Associated With Pesticide Applications

A. When a Pesticide is Applied:	B. Workers are Prohibited in:	C. Until:	D. After the Expiration of Time in Column C Until the Restricted-Entry Interval Expires, the Entry-Restricted Area is:
(1) As a fumigant	Entire greenhouse plus any adjacent structure that cannot be sealed off from the treated area	The ventilation criteria of (c) of this subsection are met	No entry restrictions after criteria in column C are met
(2) As a: (i) Smoke, or (ii) Mist, or (iii) Fog, or (iv) Aerosol	Entire enclosed area	The ventilation criteria of (c) of this subsection are met	Entire enclosed area is the treated area
(3) Not in 1 or 2 above, and for which a respiratory protection device is required for application by the product labeling	Entire enclosed area	The ventilation criteria of (c) of this subsection are met	Treated area
(4) Not in 1, 2, or 3 above, and: (i) From a height of greater than 12 in. from the planting medium, or (ii) As a fine spray, or (iii) Using a spray pressure greater than 40 psi	Treated area plus 25 feet in all directions in the enclosed area	Application is complete	Treated area
(5) Otherwise	Treated area	Application is complete	Treated area

[Statutory Authority: RCW 49.17.040. WSR 98-24-096, § 296-307-12015, filed 12/1/98, effective 3/1/99. WSR 97-09-013, recodified as § 296-307-12015, filed 4/7/97, effective 4/7/97. Statutory Authority: RCW 49.17.040, [49.17.]050 and [49.17.]060. WSR 96-20-082, § 296-306A-12015, filed 9/30/96, effective 11/1/96.]

WAC 296-307-12020 Entry restrictions—Standards for workers—40 C.F.R., § 170.112. (1) General restrictions.

(a) After the application of any pesticide on an agricultural establishment, the agricultural employer shall not allow or direct any worker to enter or to remain in the treated area before the restricted-entry interval specified on the pesticide labeling has expired, except as provided in this section.

(b) Entry-restricted areas in greenhouses are specified in column D in Table 2 under WAC 296-307-12015 (3)(d).

(c) When two or more pesticides are applied at the same time, the restricted-entry interval shall be the longest of the applicable intervals.

(d) The agricultural employer shall assure that any worker who enters a treated area under a restricted-entry interval as permitted by subsections (3), (4), and (5) of this section uses the personal protective equipment specified in the product labeling for early entry workers and follows any other requirements on the pesticide labeling regarding early entry.

(2) Exception for activities with no contact. A worker may enter a treated area during a restricted-entry interval if the agricultural employer assures that both of the following are met:

(a) The worker will have no contact with anything that has been treated with the pesticide to which the restricted-entry interval applies, including, but not limited to, soil, water, air, or surfaces of plants; and

(b) No such entry is allowed until any inhalation exposure level listed in the labeling has been reached or any ventilation criteria established by WAC 296-307-12015 (3)(c) or in the labeling have been met.

(3) Exception for short-term activities. A worker may enter a treated area during a restricted-entry interval for short-term activities if the agricultural employer assures that the following requirements are met:

(a) No hand labor activity is performed.

(b) The time in treated areas under a restricted-entry interval for any worker does not exceed one hour in any twenty-four-hour period.

(c) No such entry is allowed for the first four hours following the end of the application, and no such entry is allowed thereafter until any inhalation exposure level listed in the labeling has been reached or any ventilation criteria established by WAC 296-307-12015 (3)(c) or in the labeling have been met.

(d) The personal protective equipment specified on the product labeling for early entry is provided to the worker. Such personal protective equipment shall conform to the following standards:

(i) Personal protective equipment (PPE) means devices and apparel that are worn to protect the body from contact with pesticides or pesticide residues, including, but not limited to, coveralls, chemical-resistant suits, chemical-resistant gloves, chemical-resistant footwear, respiratory protection devices, chemical-resistant aprons, chemical-resistant headgear, and protective eyewear.

(ii) Long-sleeved shirts, short-sleeved shirts, long pants, short pants, shoes, socks, and other items of work clothing are not considered personal protective equipment for the purposes of this section and are not subject to the requirements of this section, although pesticide labeling may require that such work clothing be worn during some activities.

(iii) When "chemical-resistant" personal protective equipment is specified by the product labeling, it shall be made of material that allows no measurable movement of the pesticide being used through the material during use.

(iv) When "waterproof" personal protective equipment is specified by the product labeling, it shall be made of material that allows no measurable movement of water or aqueous solutions through the material during use.

(v) When a "chemical-resistant suit" is specified by the product labeling, it shall be a loose-fitting, one-piece or two-piece, chemical-resistant garment that covers, at a minimum, the entire body except head, hands, and feet.

(vi) When "coveralls" are specified by the product labeling, they shall be a loose-fitting, one-piece or two-piece garment, such as a cotton or cotton and polyester coverall, that covers, at a minimum, the entire body except head, hands, and feet. The pesticide product labeling may specify that the coveralls be worn over a layer of clothing. If a chemical-resistant suit is substituted for coveralls, it need not be worn over a layer of clothing.

(vii)(A) Gloves shall be of the type specified on the pesticide product labeling. Gloves made of leather, cotton, or other absorbent materials must not be worn for early-entry activities, unless gloves made of these materials are listed as acceptable for such use on the product labeling. If chemical-resistant gloves with sufficient durability and suppleness are not obtainable, leather gloves may be worn on top of chemical-resistant gloves. However, once leather gloves have been worn for this use, they shall not be worn thereafter for any other purpose, they shall only be worn over chemical-resistant gloves.

(B) Separable glove liners may be worn beneath chemical-resistant gloves, unless the pesticide product labeling specifically prohibits their use. Separable glove liners are defined as separate glove-like hand coverings made of lightweight material, with or without fingers. Work gloves made from lightweight cotton or poly-type material are considered to be glove liners if worn beneath chemical-resistant gloves. Separable glove liners may not extend outside the chemical-resistant gloves under which they are worn. Chemical-resistant gloves with nonseparable absorbent lining materials are prohibited.

(C) If used, separable glove liners must be discarded immediately after a total of no more than ten hours of use or within twenty-four hours of when first put on, whichever comes first. The liners must be replaced immediately if directly contacted by pesticide. Used glove liners shall not be reused. Contaminated liners must be disposed of in accordance with any federal, state, or local regulations.

(viii) When "chemical-resistant footwear" is specified by the product labeling, it shall be one of the following types of footwear: Chemical-resistant shoes, chemical-resistant boots, or chemical-resistant shoe coverings worn over shoes or boots. If chemical-resistant footwear with sufficient durability and a tread appropriate for wear in rough terrain is not obtainable for workers, then leather boots may be worn in such terrain.

(ix) When "protective eyewear" is specified by the product labeling, it shall be one of the following types of eyewear: Goggles; face shield; safety glasses with front, brow, and temple protection; or a full-face respirator.

(x) When "chemical-resistant headgear" is specified by the product labeling, it shall be either a chemical-resistant hood or a chemical-resistant hat with a wide brim.

(e) The agricultural employer shall assure that the worker, before entering the treated area, either has read the product labeling or has been informed, in a manner that the worker can understand, of all labeling requirements related to human hazards or precautions, first aid, symptoms of poisoning, personal protective equipment specified for early entry, and any other labeling requirements related to safe use.

(f) The agricultural employer shall assure that:

(i) Workers wear the personal protective equipment correctly for its intended purpose and use personal protective equipment according to manufacturer's instructions.

(ii) Before each day of use, all personal protective equipment is inspected for leaks, holes, tears, or worn places, and any damaged equipment is repaired or discarded.

(iii) Personal protective equipment that cannot be cleaned properly is disposed of in accordance with any applicable federal, state, and local regulations.

(iv) All personal protective equipment is cleaned according to manufacturer's instructions or pesticide product labeling instructions before each day of reuse. In the absence of any such instructions, it shall be washed thoroughly in detergent and hot water.

(v) Before being stored, all clean personal protective equipment is dried thoroughly or is put in a well-ventilated place to dry.

(vi) Personal protective equipment contaminated with pesticides is kept separately and washed separately from any other clothing or laundry.

(vii) Any person who cleans or launders personal protective equipment is informed that such equipment may be contaminated with pesticides, of the potentially harmful effects of exposure to pesticides, and of the correct way(s) to handle and clean personal protective equipment and to protect themselves when handling equipment contaminated with pesticides.

(viii) All clean personal protective equipment is stored separately from personal clothing and apart from pesticide-contaminated areas.

(ix) Each worker is instructed how to put on, use, and remove the personal protective equipment and is informed about the importance of washing thoroughly after removing personal protective equipment.

(x) Each worker is instructed in the prevention, recognition, and first-aid treatment of heat-related illness.

Note: Additional requirements in WAC 296-307-097, Outdoor heat exposure, may apply between May 1st and September 30th of each year. See Part G-1.

(xi) Workers have a clean place(s) away from pesticide-storage and pesticide-use areas for storing personal clothing not in use; putting on personal protective equipment at the start of any exposure period; and removing personal protective equipment at the end of any exposure period.

(g) When personal protective equipment is required by the labeling of any pesticide for early entry, the agricultural employer shall assure that no worker is allowed or directed to perform the early entry activity without implementing, when appropriate, measures to prevent heat-related illness.

Note: Additional requirements in WAC 296-307-097, Outdoor heat exposure, may apply between May 1st and September 30th of each year. See Part G-1.

(h) During any early entry activity, the agricultural employer shall provide a decontamination site in accordance with WAC 296-307-12050.

(i) The agricultural employer shall not allow or direct any worker to wear home or to take home personal protective equipment contaminated with pesticides.

(4) Declaration of an agricultural emergency.

(a) The director of the Washington state department of agriculture may declare the existence of circumstances causing an agricultural emergency on a particular establishment or establishments.

(b) The director may declare an agricultural emergency based on the reasonably expected certainty of circumstances occurring based on weather or other forecasts that would create conditions that would normally be anticipated to cause an agricultural emergency.

(c) The agricultural employer may determine if the establishment under his/her control is subject to the agricultural emergency declared by the director.

(d) Emergency repair of equipment that is in use and sited within a pesticide treated area under a restricted-entry interval, such as frost protection devices, shall be considered to be an agricultural emergency.

(e) Activities that require immediate response such as fire suppression, relocation of greenhouse plants due to power failure, and similar conditions, shall be considered to be agricultural emergencies.

(5) Agricultural activities permitted under an agricultural emergency.

(a) A worker may enter a pesticide treated area under a restricted-entry interval in an agricultural emergency to perform tasks, including hand labor tasks, necessary to mitigate the effects of the agricultural emergency if the agricultural employer assures that all the following requirements are met:

(i) No entry is permitted for the first four hours after the pesticide application or the minimum reentry interval allowed by EPA for that product, whichever is less;

(ii) The personal protective equipment specified on the product labeling for early entry is provided to the worker;

(iii) The agricultural employer shall assure that the worker, before entering the treated area, either has read the product labeling or has been informed, in a manner the worker can understand, of all labeling requirements related to human hazards or precautions, first aid, symptoms of poisoning, personal protective equipment specified for early entry, and any other labeling requirements related to safe use;

(iv) The agricultural employer shall assure that the worker wears the proper PPE and that the PPE is in operable condition and that the worker has been trained in its proper use;

(v) The agricultural employer shall assure that measures have been taken, when appropriate, to prevent heat-related illness;

Note: Additional requirements in WAC 296-307-097, Outdoor heat exposure, may apply between May 1st and September 30th of each year. See Part G-1.

(vi) A decontamination site has been provided in accordance with EPA regulations;

(vii) The agricultural employer shall not allow or direct any worker to wear home or take home personal protective equipment contaminated with pesticides.

(b) If the agricultural emergency is due to equipment failure, then the agricultural employer shall assure that all the requirements in subsection (1) of this section are met plus the following additional requirement. The only permitted activity until the restricted-entry interval has elapsed is equipment repair that would mitigate the effect of the equipment failure.

(6) Recordkeeping required for agricultural emergencies.

(a) If the employer declares that his/her establishment is affected by an agricultural emergency and that activities regulated by the worker protection standard have been performed, the employer shall keep the following records for seven years from the date of the agricultural emergency:

(i) Date of the agricultural emergency;

(ii) Time of the agricultural emergency, start and end;

(iii) Reason for the agricultural emergency, such as frost, fire, equipment failure, etc.;

(iv) Crop/site;

(v) Pesticide(s) - name, EPA number, REI;

(vi) Name, date, time of entry and exit of early entry person(s);

(vii) Estimated potential of economic loss which would have occurred had no early entry been allowed.

(b) Records shall be completed within twenty-four hours of the early entry exposure and be available to the department and/or department of health and/or medical facility or treating physician if requested by the above or the employee.

(7) Exception to entry restrictions requiring EPA approval. EPA may in accordance with 40 C.F.R., Part 170.112(e) grant an exception from the requirements of this section. A request for an exception must be submitted to the Director, Office of Pesticide Programs (H-7501C), Environmental Protection Agency, 401 "M" Street SW, Washington,

DC 20460 and must be accompanied by two copies of the information specified in 40 C.F.R., Part 170.112(e).

[Statutory Authority: RCW 49.17.050. WSR 09-17-119, § 296-307-12020, filed 8/18/09, effective 10/1/09. Statutory Authority: RCW 49.17.010, 49.17.040, 49.17.050, and 49.17.060. WSR 09-07-098, § 296-307-12020, filed 3/18/09, effective 5/1/09. Statutory Authority: RCW 49.17.040. WSR 98-24-096, § 296-307-12020, filed 12/1/98, effective 3/1/99. WSR 97-09-013, recodified as § 296-307-12020, filed 4/7/97, effective 4/7/97. Statutory Authority: RCW 49.17.040, [49.17.]050 and [49.17.]060. WSR 96-20-082, § 296-306A-12020, filed 9/30/96, effective 11/1/96.]

WAC 296-307-12025 Notice of applications—Standards for workers—40 C.F.R., § 170.120. (1) Notification to workers of pesticide applications in greenhouses. The agricultural employer shall notify workers of any pesticide application in the greenhouse in accordance with this subsection.

(a) All pesticide applications shall be posted in accordance with subsection (3) of this section.

(b) If the pesticide product labeling has a statement requiring both the posting of treated areas and oral notification to workers, the agricultural employer shall also provide oral notification of the application to the worker in accordance with subsection (4) of this section.

(c) Notice need not be given to a worker if the agricultural employer can assure that one of the following is met:

(i) From the start of the application until the end of the application and during any restricted-entry interval, the worker will not enter, work in, remain in, or pass through the greenhouse; or

(ii) The worker applied (or supervised the application of) the pesticide for which the notice is intended and is aware of all information required by subsection (4)(a) through (c) of this section.

(2) Notification to workers on farms, in nurseries, or in forests of pesticide applications. The agricultural employer shall notify workers of any pesticide application on the farm or in the nursery or forest in accordance with this subsection.

(a) If the pesticide product labeling has a statement requiring both the posting of treated areas and oral notification to workers, the agricultural employer shall post signs in accordance with subsection (3) of this section and shall provide oral notification of the application to the worker in accordance with subsection (4) of this section.

(b) For any pesticide other than those for which the labeling requires both posting and oral notification of applications, the agricultural employer shall give notice of the application to the worker either by the posting of warning signs in accordance with subsection (3) of this section or orally in accordance with subsection (4) of this section, and shall inform the workers as to which method of notification is in effect.

(c) Notice need not be given to a worker if the agricultural employer can assure that one of the following is met:

(i) From the start of the application until the end of the application and during any restricted-entry interval, the worker will not enter, work in, remain in, or pass through on foot the treated area or any area within one-quarter mile of the treated area; or

(ii) The worker applied (or supervised the application of) the pesticide for which the notice is intended and is aware of all information required by subsection (4)(a) through (c) of this section.

(3) Posted warning signs. The agricultural employer shall post warning signs in accordance with the following criteria:

(a) The warning sign shall have a background color that contrasts with red. The words "DANGER" and "PELIGRO," plus "PESTICIDES" and "PESTICIDAS," shall be at the top of the sign, and the words "KEEP OUT" and "NO ENTRE" shall be at the bottom of the sign. Letters for all words must be clearly legible. A circle containing an upraised hand on the left and a stern face on the right must be near the center of the sign. The inside of the circle must be red, except that the hand and a large portion of the face must be in a shade that contrasts with red. The length of the hand must be at least twice the height of the smallest letters. The length of the face must be only slightly smaller than the hand. Additional information such as the name of the pesticide and the date of application may appear on the warning sign if it does not detract from the appearance of the sign or change the meaning of the required information. A black and white example of a warning sign meeting these requirements, other than the size requirements, follows:

(b) The standard sign shall be at least fourteen inches by sixteen inches with letters at least one inch in height. Farms and forests shall use the standard size sign unless a smaller sign is necessary because the treated area is too small to accommodate a sign of this size. In nurseries and greenhouses, the agricultural employer may, at any time, use a sign smaller than the standard size sign. Whenever a small sign is used on any establishment, there are specific posting distances depending on the size of the lettering and symbol on the sign. If a sign is used with DANGER and PELIGRO in letters at least 7/8 inch in height and the remaining letters at least 1/2 inch and a red circle at least three inches in diameter containing an upraised hand and a stern face, the signs shall be no further than fifty feet apart. If a sign is used with DANGER and PELIGRO in letters at least 7/16 inch in height and the remain-

ing letters at least 1/4 inch in height and a red circle at least 1 1/2 inches in diameter containing an upraised hand and stern face, the signs shall be no further than twenty-five feet apart. A sign with DANGER and PELIGRO in letters less than 7/16 inch in height or with any words in letters less than 1/4 inch in height, or a red circle smaller than 1 1/2 inches in diameter containing an upraised hand and a stern face will not satisfy the requirements of the rule. All signs must meet the requirements of (a) of this subsection.

(c) The employer may replace the Spanish portion of the warning sign with a non-English language read by the largest group of workers who do not read English. The replacement sign must be in the same format as the original sign and must be visible and legible.

(d) On farms and in forests and nurseries, the signs shall be visible from all usual points of worker entry to the treated area, including at least each access road, each border with any labor camp adjacent to the treated area, and each footpath and other walking route that enters the treated area. When there are no usual points of worker entry, signs shall be posted in the corners of the treated area or in any other location affording maximum visibility.

(e) In greenhouses, the signs shall be posted so they are visible from all usual points of worker entry to the treated area including each aisle or other walking route that enters the treated area. When there are no usual points of worker entry to the treated area, signs shall be posted in the corners of the treated area or in any other location affording maximum visibility.

(f) The signs shall:

(i) Be posted no sooner than twenty-four hours before the scheduled application of the pesticide.

(ii) Remain posted throughout the application and any restricted-entry interval.

(iii) Be removed within three days after the end of the application and any restricted-entry interval and before agricultural-worker entry is permitted, other than entry permitted by WAC 296-307-12020.

(g) The signs shall remain visible and legible during the time they are posted.

(h) When several contiguous areas are to be treated with pesticides on a rotating or sequential basis, the entire area may be posted. Worker entry, other than entry permitted by WAC 296-307-12020, is prohibited for the entire area while the signs are posted.

(4) Oral warnings. The agricultural employer shall provide oral warnings to workers in a manner that the worker can understand. If a worker will be on the premises during the application, the warning shall be given before the application takes place. Otherwise, the warning shall be given at the beginning of the worker's first work period during which the application is taking place or the restricted-entry interval for the pesticide is in effect. The warning shall consist of:

(a) The location and description of the treated area.

(b) The time during which entry is restricted.

(c) Instructions not to enter the treated area until the restricted-entry interval has expired.

[Statutory Authority: RCW 49.17.040. WSR 98-24-096, § 296-307-12025, filed 12/1/98, effective 3/1/99. WSR 97-09-013, recodified as § 296-307-12025, filed 4/7/97, effective 4/7/97. Statutory Authority: RCW 49.17.040, [49.17.]050 and [49.17.]060. WSR 96-20-082, § 296-306A-12025, filed 9/30/96, effective 11/1/96.]

WAC 296-307-12030 Providing specific information about applications—Standards for workers—40 C.F.R., § 170.122. When workers are on an agricultural establishment and, within the last thirty days, a pesticide covered by this part has been applied on the establishment or a restricted-entry interval has been in effect, the agricultural employer shall display, in accordance with this section, specific information about the pesticide.

(1) Location, accessibility, and legibility. The information shall be displayed in the location specified for the pesticide safety poster in WAC 296-307-12045(4) and shall be accessible and legible, as specified in WAC 296-307-12045 (4) and (6).

(2) Timing.

(a) If warning signs are posted for the treated area before an application, the specific application information for that application shall be posted at the same time or earlier.

(b) The information shall be posted before the application takes place, if workers will be on the establishment during application. Otherwise, the information shall be posted at the beginning of any worker's first work period.

(c) The information shall continue to be displayed for at least thirty days after the end of the restricted-entry interval (or, if there is no restricted-entry interval, for at least thirty days after the end of the application) or at least until workers are no longer on the establishment, whichever is earlier.

(3) Required information. The information shall include:

(a) The location and description of the treated area.

(b) The product name, EPA registration number, and active ingredient(s) of the pesticide.

(c) The time and date the pesticide is to be applied.

(d) The restricted-entry interval for the pesticide.

[Statutory Authority: RCW 49.17.040. WSR 98-24-096, § 296-307-12030, filed 12/1/98, effective 3/1/99. WSR 97-09-013, recodified as § 296-307-12030, filed 4/7/97, effective 4/7/97. Statutory Authority: RCW 49.17.040, [49.17.]050 and [49.17.]060. WSR 96-20-082, § 296-306A-12030, filed 9/30/96, effective 11/1/96.]

WAC 296-307-12035 Notice of applications to handler employers—Standards for workers—40 C.F.R., § 170.124. Whenever handlers who are employed by a commercial pesticide handling establishment will be performing pesticide handling tasks on an agricultural establishment, the agricultural employer shall provide to the handler employer, or assure that the handler employer is aware of, the following information concerning any areas on the agricultural establishment that the handler may be in (or may walk within one-quarter mile of) and that may be treated with a pesticide or that may be under a restricted-entry interval while the handler will be on the agricultural establishment:

(1) Specific location and description of any such areas; and

(2) Restrictions on entering those areas.

[WSR 97-09-013, recodified as § 296-307-12035, filed 4/7/97, effective 4/7/97. Statutory Authority: RCW 49.17.040, [49.17.]050 and [49.17.]060. WSR 96-20-08, § 296-306A-12035, filed 9/30/96, effective 11/1/96.]

WAC 296-307-12040 Pesticide safety training—Standards for workers—40 C.F.R., § 170.130. (1) General requirement.

(a) Agricultural employer assurance. The agricultural employer shall assure that each worker, required by this section to be trained, has been trained according to this section during the last five years, counting from the end of the month in which the training was completed.

Note: In addition to the training required by this section, the agricultural employer shall assure without exception, that all employees are trained in accordance with WAC 296-307-550, Employer chemical hazard communication.

(b) Requirement for workers performing early entry activities. Before a worker enters a treated area on the agricultural establishment during a restricted-entry interval to perform early entry activities permitted by WAC 296-307-12020 and contacts anything that has been treated with the pesticide to which the restricted-entry interval applies, including but not limited to, soil, water, or surfaces of plants, the agricultural employer shall assure that the worker has been trained.

(c) Requirements for other agricultural workers.

(i) Information before entry. Except as provided in (b) of this subsection, before a worker enters any areas on the agricultural establishment where, within the last thirty days a pesticide to which this part applies has been applied or the restricted-entry interval for such pesticide has been in effect, the agricultural employer shall assure that the worker has been provided the pesticide safety information specified in subsection (3) of this section, in a manner that agricultural workers can understand, such as by providing written materials or oral communication or by other means. The agricultural employer must be able to verify compliance with this requirement.

(ii) Training before the start of a work period. The agricultural employer shall assure that a worker has been trained before the worker enters any areas on the agricultural establishment where, within the last thirty days a pesticide to which this chapter applies has been applied or a restricted-entry interval for such pesticide has been in effect, the agricultural employer shall assure that the worker has been trained.

(2) Exceptions. The following persons need not be trained under this section:

(a) A worker who is currently certified as an applicator of restricted-use pesticides under chapter 17.21 RCW.

(b) A worker who satisfies the training requirements of chapter 17.21 RCW.

(c) A worker who satisfies the handler training requirements of WAC 296-307-13025(3).

(d) A worker who is certified or licensed as a crop advisor by the Washington state department of agriculture under RCW 15.58.230: Provided, That a requirement for such certification or licensing is pesticide safety training that includes all the information set out in WAC 296-307-13025 (3)(d).

(3) Training programs.

(a) General pesticide safety information shall be presented to workers either orally from written materials or audiovisually. The information must be presented in a manner that the workers can understand (such as through a translator) using nontechnical terms. The presenter also shall respond to workers' questions.

(b) The person who conducts the training shall meet at least one of the following criteria:

(i) Be currently certified as an applicator of restricted-use pesticides under chapter 17.21 RCW; or

(ii) Be currently designated as a trainer of certified applicators or pesticide handlers by the Washington state department of agriculture in accordance with chapters 15.58 and 17.21 RCW; or

(iii) Have completed a pesticide safety train-the-trainer program approved by the Washington state department of agriculture in accordance with chapters 15.58 and 17.21 RCW; or

(iv) Satisfy the training requirements in WAC 296-307-13025(3).

(c) Any person who issues a Washington state department of agriculture-approved Worker Protection Standard worker training card must assure that the worker who receives the training card has been trained in accordance with subsection (4)(d) of this section.

(d) The training materials shall convey, at a minimum, the following information:

(i) Where and in what form pesticides may be encountered during work activities.

(ii) Hazards of pesticides resulting from toxicity and exposure, including acute and chronic effects, delayed effects, and sensitization.

(iii) Routes through which pesticides can enter the body, including information on wearing work clothing that protects the body from pesticide residues.

(iv) Signs and symptoms of common types of pesticide poisoning.

(v) Emergency first aid for pesticide injuries or poisonings.

(vi) How to obtain emergency medical care.

(vii) Routine and emergency decontamination procedures, including preventing pesticides from entering the body by:

- Emergency eyeflushing techniques;
- Washing work clothes separately from other clothes before wearing them again;
- Washing before eating, drinking, using chewing gum or tobacco, or using the toilet;
- Washing/showering with soap and water, shampooing hair, and putting on clean clothes after work; and
- Washing immediately in the nearest clean water if pesticides are spilled on the body. As soon as possible shower, shampoo, and change into clean clothes.

(viii) Hazards from chemigation and drift.

(ix) Hazards from pesticide residues on clothing.

(x) Warnings about taking pesticides or pesticide containers home.

(xi) Requirements of this part designed to reduce the risks of illness or injury resulting from workers' occupational exposure to pesticides, including application and entry restrictions, the design of the warning sign, posting of warning signs, oral warnings, the availability of specific information about applications, and the protection against retaliatory acts.

(4) Verification of training.

(a) Except as provided in subsection (4)(b) of this section, if the agricultural employer assures that a worker possesses a Washington state department of agriculture-approved Worker Protection Standard worker training card, then the requirements of subsection (1) of this section will have been met.

(b) If the agricultural employer is aware or has reason to know that a Washington state department of agriculture-approved Worker Protection Standard worker training card has not been issued in accordance with this section, or has not been issued to the worker bearing the card, or the training was completed more than five years before the beginning of the current month, a worker's possession of that certificate does not meet the requirements of subsection (1) of this section.

[Statutory Authority: RCW 49.17.010, [49.17].040, and [49.17].050. WSR 01-17-033, § 296-307-12040, filed 8/8/01, effective 9/1/01. Statutory Authority: RCW 49.17.040. WSR 98-24-096, § 296-307-12040, filed 12/1/98, effective 3/1/99. WSR 97-09-013, recodified as § 296-307-12040, filed 4/7/97, effective 4/7/97. Statutory Authority: RCW 49.17.040, [49.17.]050 and [49.17.]060. WSR 96-20-082, § 296-306A-12040, filed 9/30/96, effective 11/1/96.]

WAC 296-307-12045 Posted pesticide safety information—Standards for workers—40 C.F.R., § 170.135. (1) Requirement. When workers are on an agricultural establishment and, within the last thirty days, a pesticide covered by this part has been applied on the establishment or a restricted-entry interval has been in effect, the agricultural employer shall display, in accordance with this section, pesticide safety information.

(2) Pesticide safety poster. A safety poster must be displayed that conveys, at a minimum, the following basic pesticide safety concepts:

(a) Help keep pesticides from entering your body. At a minimum, the following points shall be conveyed:

(i) Avoid getting on your skin or into your body any pesticides that may be on plants and soil, in irrigation water, or drifting from nearby applications.

(ii) Wash before eating, drinking, using chewing gum or tobacco, or using the toilet.

(iii) Wear work clothing that protects the body from pesticide residues (long-sleeved shirts, long pants, shoes and socks, and a hat or scarf).

(iv) Wash/shower with soap and water, shampoo hair, and put on clean clothes after work.

(v) Wash work clothes separately from other clothes before wearing them again.

(vi) Wash immediately in the nearest clean water if pesticides are spilled or sprayed on the body. As soon as possible, shower, shampoo, and change into clean clothes.

(vii) Follow directions about keeping out of treated or restricted areas.

(b) There are federal rules to protect workers and handlers, including a requirement for safety training.

(3) Emergency medical care information.

(a) The name, address, and telephone number of the nearest emergency medical care facility shall be on the safety poster or displayed close to the safety poster.

(b) The agricultural employer shall inform workers promptly of any change to the information on emergency medical care facilities.

(4) Location.

(a) The information shall be displayed in a central location on the farm or in the nursery or greenhouse where it can be readily seen and read by workers.

(b) The information shall be displayed in a location in or near the forest in a place where it can be readily seen and read by workers and where workers are likely to congregate or pass by, such as at a decontamination site or an equipment storage site.

(5) Accessibility. Workers shall be informed of the location of the information and shall be allowed access to it.

(6) Legibility. The information shall remain legible during the time it is posted.

[WSR 97-09-013, recodified as § 296-307-12045, filed 4/7/97, effective 4/7/97. Statutory Authority: RCW 49.17.040, [49.17.]050 and [49.17.]060. WSR 96-20-082, § 296-306A-12045, filed 9/30/96, effective 11/1/96.]

WAC 296-307-12050 Decontamination—Standards for workers—40 C.F.R., § 170.150. (1) Requirements. The agricultural employer must provide decontamination supplies for workers in accordance with this section whenever:

(a) Any worker on the agricultural establishment is performing an activity in the area where a pesticide was applied or a restricted-entry interval (REI) was in effect within the last thirty days; and

(b) The worker contacts anything that has been treated with the pesticide including but not limited to soil, water, plants, plant surfaces, and plant parts;

(c) *Exception.* The thirty-day time period established in (a) of this subsection shall not apply if the only pesticides used in the treated area are products with an REI of four hours or less on the label (but not a product without an REI on the label). When workers are in such treated areas, the agricultural employer shall provide decontamination supplies for not less than seven days following the expiration of any applicable REI.

(2) General conditions.

(a) The agricultural employer shall provide workers with adequate water for routine washing and emergency eyeflushing. At all times when the water is available to workers, the employer shall assure that it is of a quality and temperature that will not cause illness or injury when it contacts the skin or eyes or if it is swallowed.

(b) When water stored in a tank is to be used for mixing pesticides, it shall not be used for decontamination or eyeflushing, unless the tank is equipped with properly functioning valves or other mechanisms that prevent movement of pesticides into the tank.

(c) The agricultural employer shall provide soap and single-use towels in quantities sufficient to meet workers' needs.

(d) To provide for emergency eyeflushing, the agricultural employer shall assure that at least one pint of water is immediately available to each worker who is performing early entry activities permitted by WAC 296-307-12020 and for which the pesticide labeling requires protective eyewear. The eyeflush water shall be carried by the early entry worker, or shall be on the vehicle the early entry worker is using, or shall be otherwise immediately accessible.

(3) Location.

(a) The decontamination supplies shall be located together and shall be reasonably accessible to and not more than one-quarter mile from where workers are working.

(b) For worker activities performed more than one-quarter mile from the nearest place of vehicular access:

(i) The soap, single-use towels, and water may be at the nearest place of vehicular access.

(ii) The agricultural employer may permit workers to use clean water from springs, streams, lakes, or other sources for decontamination at the remote work site, if such water is more accessible than the water located at the nearest place of vehicular access.

(c) The decontamination supplies shall not be in an area being treated with pesticides.

(d) The decontamination supplies shall not be maintained in an area that is under a restricted-entry interval, unless the workers for whom the decontamination supplies are provided are performing early entry activities permitted by WAC 296-307-12020 and involving contact with treated surfaces and the decontamination supplies would otherwise not be reasonably accessible to those workers.

(4) Decontamination after early entry activities. At the end of any exposure period for workers engaged in early entry activities permitted by WAC 296-307-12020 and involving contact with anything that has been treated with the pesticide to which the restricted-entry interval applies, including, but not limited to, soil, water, air, or surfaces of plants, the agricultural employer shall provide, at the site where the workers remove personal protective equipment, soap, clean towels, and a adequate amount of water so that the workers may wash thoroughly. At least ten gallons of water for one employee and twenty gallons of water for two or more employees shall be provided at early entry sites that do not have running water.

[Statutory Authority: RCW 49.17.040. WSR 98-24-096, § 296-307-12050, filed 12/1/98, effective 3/1/99. WSR 97-09-013, recodified as § 296-307-12050, filed 4/7/97, effective 4/7/97. Statutory Authority: RCW 49.17.040, [49.17.]050 and [49.17.]060. WSR 96-20-082, § 296-306A-12050, filed 9/30/96, effective 11/1/96.]

WAC 296-307-12055 Emergency assistance—Standards for workers—40 C.F.R., § 170.160. If there is reason to believe that a person who is or has been employed on an agricultural establishment to perform tasks related to the production of agricultural plants has been poisoned or injured by exposure to pesticides used on the agricultural establishment, including, but not limited to, exposures from application, splash, spill, drift, or pesticide residues, the agricultural employer shall:

(1) Make available to that person prompt transportation from the agricultural establishment, including any labor camp on the agricultural establishment, to an appropriate emergency medical facility.

(2) Provide to that person or to treating medical personnel, promptly upon request, any obtainable information on:

(a) Product name, EPA registration number, and active ingredients of any product to which that person might have been exposed.

(b) Antidote, first-aid, and other medical information from the product labeling.

(c) The circumstances of application or use of the pesticide on the agricultural establishment.

(d) The circumstances of exposure of that person to the pesticide.

[WSR 97-09-013, recodified as § 296-307-12055, filed 4/7/97, effective 4/7/97. Statutory Authority: RCW 49.17.040, [49.17.]050 and [49.17.]060. WSR 96-20-082, § 296-306A-12055, filed 9/30/96, effective 11/1/96.]

Standard for Pesticide Handlers

WAC 296-307-130 Applicability of this section—Standards for pesticide handlers—40 C.F.R., § 170.202. (1) Requirement. Except as provided by subsection (2) of this section, WAC 296-307-130 applies when any pesticide is handled for use on an agricultural establishment.

(2) Exceptions. WAC 296-307-130 does not apply when any pesticide is handled for use on an agricultural establishment in the following circumstances:

(a) For mosquito abatement, Mediterranean fruit fly eradication, or similar wide-area public pest control programs sponsored by governmental entities.

(b) On livestock or other animals, or in or about animal premises.

(c) On plants grown for other than commercial or research purposes, which may include plants in habitations, home fruit and vegetable gardens, and home greenhouses.

(d) On plants that are in ornamental gardens, parks, and public or private lawns and grounds and that are intended only for aesthetic purposes or climatic modification.

(e) In a manner not directly related to the production of agricultural plants, including, but not limited to, structural pest control, control of vegetation along rights of way and in other noncrop areas, and pasture and rangeland use.

(f) For control of vertebrate pests.

(g) As attractants or repellents in traps.

(h) On the harvested portions of agricultural plants or on harvested timber.

(i) For research uses of unregistered pesticides.

(j) Exemptions. Except as provided by WAC 296-307-130 and 296-307-13005, WAC 296-307-130 applies when a pesticide is handled for an agricultural establishment.

[Statutory Authority: RCW 49.17.040. WSR 98-24-096, § 296-307-130, filed 12/1/98, effective 3/1/99. WSR 97-09-013, recodified as § 296-307-130, filed 4/7/97, effective 4/7/97. Statutory Authority: RCW 49.17.040, [49.17.]050 and [49.17.]060. WSR 96-20-082, § 296-306A-130, filed 9/30/96, effective 11/1/96.]

WAC 296-307-13005 Exemptions—Standards for handlers—40 C.F.R., § 170.204. The handlers listed in this section are exempt from the specified provisions of this part.

(1) Owners of agricultural establishments.

(a) The owner of an agricultural establishment is not required to provide to himself or members of his immediate family who are performing handling tasks on their own agricultural establishment the protections of:

(i) WAC 296-307-13010 (2) and (3).

(ii) WAC 296-307-13015.

(iii) WAC 296-307-13025.

(iv) WAC 296-307-13030.

(v) WAC 296-307-13035.

(vi) WAC 296-307-13040.

(vii) WAC 296-307-13045 (5) through (7).

(viii) WAC 296-307-13050.

(ix) WAC 296-307-13055.

(b) The owner of the agricultural establishment must provide the protections listed in subsection (1)(a)(i) through (ix) of this section to other handlers and other persons who are not members of his immediate family.

(2) Crop advisors.

(a) Provided that the conditions of (b) of this subsection are met, a person who is certified or licensed as a crop advisor by the Washington state department of agriculture under RCW 15.58.230, and persons performing crop advising tasks under such qualified crop advisor's direct supervision, are exempt from the provisions of:

(i) WAC 296-307-13030.

(ii) WAC 296-307-13045.

(iii) WAC 296-307-13050.

(iv) WAC 296-307-13055.

A person is under the direct supervision of a crop advisor when the crop advisor exerts the supervisory controls set out in (b)(iv) and (v) of this subsection. Direct supervision does not require that the crop advisor be physically present at all times, but the crop advisor must be readily accessible to the employees at all times.

(b) Conditions of exemption.

(i) The certification or licensing program requires pesticide safety training that includes, at least, all the information in WAC 296-307-13025 (3)(d).

(ii) No entry into the treated area occurs until after application ends.

(iii) Applies only when performing crop advising tasks in the treated area.

(iv) The crop advisor must make specific determinations regarding the appropriate PPE, appropriate decontamination supplies, and how to conduct the tasks safely. The crop advisor must convey this information to each person under his direct supervision in a language that the person understands.

(v) Before entering a treated area, the certified or licensed crop advisor must inform, through an established practice of communication, each person under his direct supervision of the pesticide products and active ingredient(s) applied, method of application, time of application, the restricted-entry interval, which tasks to undertake, and how to contact the crop advisor.

(c) Applies only when the persons are performing crop advising tasks in the treated area.

(d) The crop advisor must make specific determinations regarding the appropriate PPE, appropriate decontamination supplies, and how to conduct the tasks safely. The crop advisor must convey this information to each person under his direct supervision in a language that the person understands.

[Statutory Authority: RCW 49.17.040. WSR 98-24-096, § 296-307-13005, filed 12/1/98, effective 3/1/99. WSR 97-09-013, recodified as § 296-307-13005, filed 4/7/97, effective 4/7/97. Statutory Authority: RCW 49.17.040, [49.17.]050 and [49.17.]060. WSR 96-20-082, § 296-306A-13005, filed 9/30/96, effective 11/1/96.]

WAC 296-307-13010 Restrictions during applications—Standards for pesticide handlers—40 C.F.R., § 170.210. (1) Contact with workers and other persons. The handler employer and the handler shall assure that no pesticide is applied so as to contact, either directly or through drift, any worker or other person, other than an appropriately trained and equipped handler.

(2) Handlers handling highly toxic pesticides. The handler employer shall assure that any handler who is performing any handling activity with a product that has the skull and crossbones symbol on the front panel of the label is monitored visually or by voice communication at least every two hours.

(3) Fumigant applications in greenhouses. The handler employer shall assure:

(a) That any handler who handles a fumigant in a greenhouse, including a handler who enters the greenhouse before the acceptable inhalation exposure level or ventilation criteria have been met to monitor air levels or to initiate ventilation, maintains continuous visual or voice contact with another handler.

(b) That the other handler has immediate access to the personal protective equipment required by the fumigant labeling for handlers in the event entry into the fumigated greenhouse becomes necessary for rescue.

[WSR 97-09-013, recodified as § 296-307-13010, filed 4/7/97, effective 4/7/97. Statutory Authority: RCW 49.17.040, [49.17.]050 and [49.17.]060. WSR 96-20-082, § 296-306A-13010, filed 9/30/96, effective 11/1/96.]

WAC 296-307-13015 Providing specific information about applications—Standards for pesticide handlers—40 C.F.R., § 170.222. When handlers (except those employed by a commercial pesticide handling establishment) are on an agricultural establishment and, within the last thirty days, a pesticide covered by this part has been applied on the establishment or a restricted-entry interval has been in effect, the handler employer shall display, in accordance with this section, specific information about the pesticide.

(1) Location, accessibility, and legibility. The information shall be displayed in the same location specified for the pesticide safety poster in WAC 296-307-13040(4) and shall be accessible and legible, as specified in WAC 296-307-13040 (5) and (6).

(2) Timing.

(a) If warning signs are posted for the treated area before an application, the specific application information for that application shall be posted at the same time or earlier.

(b) The information shall be posted before the application takes place, if handlers (except those employed by a commercial pesticide handling establishment) will be on the establishment during application. Otherwise, the information shall be posted at the beginning of any such handler's first work period.

(c) The information shall continue to be displayed for at least thirty days after the end of the restricted-entry interval (or, if there is no restricted-entry interval, for at least thirty days after the end of the application) or at least until the handlers are no longer on the establishment, whichever is earlier.

(3) Required information. The information shall include:

(a) The location and description of the treated area.

(b) The product name, EPA registration number, and active ingredient(s) of the pesticide.

(c) The time and date the pesticide is to be applied.

(d) The restricted-entry interval for the pesticide.

[Statutory Authority: RCW 49.17.040. WSR 98-24-096, § 296-307-13015, filed 12/1/98, effective 3/1/99. WSR 97-09-013, recodified as § 296-307-13015, filed 4/7/97, effective 4/7/97. Statutory Authority: RCW 49.17.040, [49.17.]050 and [49.17.]060. WSR 96-20-082, § 296-306A-13015, filed 9/30/96, effective 11/1/96.]

WAC 296-307-13020 Notice of applications to agricultural employers—Standards for pesticide handlers—40 C.F.R., § 170.224. Before the application of any pesticide on or in an agricultural establishment, the handler employer shall provide the following information to any agricultural employer for the establishment or shall assure that any agricultural employer is aware of:

(1) Specific location and description of the treated area.

(2) Time and date of application.

(3) Product name, EPA registration number, and active ingredient(s).

(4) Restricted-entry interval.

(5) Whether posting and oral notification are required.

(6) Any other product-specific requirements on the product labeling concerning protection of workers or other persons during or after application.

[WSR 97-09-013, recodified as § 296-307-13020, filed 4/7/97, effective 4/7/97. Statutory Authority: RCW 49.17.040, [49.17.]050 and [49.17.]060. WSR 96-20-082, § 296-306A-13020, filed 9/30/96, effective 11/1/96.]

WAC 296-307-13025 Pesticide safety training—Standards for pesticide handlers—40 C.F.R., § 170.230. (1) Requirement. Before any handler performs any handling task, the handler employer shall assure that the handler has been trained in accordance with this section during the last five years, counting from the end of the month in which the training was completed.

Note: In addition to the training required by this section, the agricultural employer shall assure, without exception, that all employees are trained in accordance with WAC 296-307-550, Employer chemical hazard communication.

(2) Exceptions. The following persons need not be trained under this section:

(a) A handler who is currently certified as an applicator of restricted-use pesticides under chapter 17.21 RCW.

(b) A handler who is certified or licensed as a crop advisor by the Washington state department of agriculture under RCW 15.58.230: Provided, That a requirement for such certification or licensing is pesticide safety training that includes all the information set out in WAC 296-307-13025 (3)(d).

(3) Training programs.

(a) General pesticide safety information shall be presented to handlers either orally from written materials or audiovisually. The information must be presented in a manner that the handlers can understand (such as through a translator). The presenter also shall respond to handlers' questions.

(b) The person who conducts the training shall meet at least one of the following criteria:

(i) Be currently certified as an applicator of restricted-use pesticides under chapter 17.21 RCW; or

(ii) Be currently designated as a trainer of certified applicators or pesticide handlers by the Washington state department of agriculture under chapters 15.58 or 17.21 RCW; or

(iii) Have completed a pesticide safety train-the-trainer program approved by a state, federal, or tribal agency having jurisdiction.

(c) Any person who issues a Washington state department of agriculture-approved worker protection standard handler training card must assure that the handler who receives the training card has been trained in accordance with (d) of this subsection.

(d) The pesticide safety training materials must convey, at a minimum, the following information:

(i) Format and meaning of information contained on pesticide labels and in labeling, including safety information such as precautionary statements about human health hazards.

(ii) Hazards of pesticides resulting from toxicity and exposure, including acute and chronic effects, delayed effects, and sensitization.

(iii) Routes by which pesticides can enter the body.

(iv) Signs and symptoms of common types of pesticide poisoning.

(v) Emergency first aid for pesticide injuries or poisonings.

(vi) How to obtain emergency medical care.

(vii) Routine and emergency decontamination procedures.

(viii) Need for and appropriate use of personal protective equipment.

(ix) Prevention, recognition, and first-aid treatment of heat-related illness.

(x) Safety requirements for handling, transporting, storing, and disposing of pesticides, including general procedures for spill cleanup.

(xi) Environmental concerns such as drift, runoff, and wildlife hazards.

(xii) Warnings about taking pesticides or pesticide containers home.

(xiii) Requirements of this part that must be followed by handler employers for the protection of handlers and other persons, including the prohibition against applying pesticides in a manner that will cause contact with workers or other persons, the requirement to use personal protective equipment, the provisions for training and decontamination, and the protection against retaliatory acts.

(4) Verification of training.

(a) Except as provided in (b) of this subsection, if the handler employer assures that a handler possesses a Washington state department of agriculture-approved worker protection standard handler training card, then the requirements of subsection (1) of this section will have been met.

(b) If the handler employer is aware or has reason to know that a Washington state department of agriculture-approved worker protection standard handler training card has not been issued in accordance with this section, or has not been issued to the handler bearing the card, or the handler training was completed more than five years before the beginning of the current month, a handler's possession of that card does not meet the requirements of subsection (1) of this section.

[Statutory Authority: RCW 49.17.010, [49.17].040, and [49.17].050. WSR 01-17-033, § 296-307-13025, filed 8/8/01, effective 9/1/01. Statutory Authority: RCW 49.17.040. WSR 98-24-096, § 296-307-13025, filed 12/1/98, effective 3/1/99. WSR 97-09-013, recodified as § 296-307-13025, filed 4/7/97, effective 4/7/97. Statutory Authority: RCW 49.17.040, [49.17.]050 and [49.17.]060. WSR 96-20-082, § 296-306A-13025, filed 9/30/96, effective 11/1/96.]

WAC 296-307-13030 Knowledge of labeling and site-specific information—Standards for pesticide handlers—40 C.F.R., § 170.232. (1) Knowledge of labeling information.

(a) The handler employer shall assure that before the handler performs any handling activity, the handler either has read the product labeling or has been informed in a manner the handler can understand of all labeling requirements related to safe use of the pesticide, such as signal words, human hazard precautions, personal protective equipment requirements, first-aid instructions, environmental precautions, and any additional precautions pertaining to the handling activity to be performed.

(b) The handler employer shall assure that the handler has access to the product labeling information during handling activities.

(2) Knowledge of site-specific information. Whenever a handler who is employed by a commercial pesticide handling establishment will be performing pesticide handling tasks on an agricultural establishment, the handler employer shall assure that the handler is aware of the following information concerning any areas on the agricultural establishment that the handler may be in (or may walk within one-quarter mile of) and that may be treated with a pesticide or that may be under a restricted-entry interval while the handler will be on the agricultural establishment:

(a) Specific location and description of any such areas; and

(b) Restrictions on entering those areas.

[WSR 97-09-013, recodified as § 296-307-13030, filed 4/7/97, effective 4/7/97. Statutory Authority: RCW 49.17.040, [49.17.]050 and [49.17.]060. WSR 96-20-082, § 296-306A-13030, filed 9/30/96, effective 11/1/96.]

WAC 296-307-13035 Safe operation of equipment—Standards for pesticide handlers—40 C.F.R., § 170.234. (1) The handler employer shall assure that before the handler uses any equipment for mixing, loading, transferring, or applying pesticides, the handler is instructed in the safe operation of such equipment, including, when relevant, chemigation safety requirements and drift avoidance.

(2) The handler employer shall assure that, before each day of use, equipment used for mixing, loading, transferring, or applying pesticides is inspected for leaks, clogging, and worn or damaged parts, and any damaged equipment is repaired or is replaced.

(3) Before allowing any person to repair, clean, or adjust equipment that has been used to mix, load, transfer, or apply pesticides, the handler employer shall assure that pesticide residues have been removed from the equipment, unless the person doing the cleaning, repairing, or adjusting is a handler employed by the agricultural or commercial pesticide handling establishment. If pesticide residue removal is not feasible, the handler employer shall assure that the person who repairs, cleans, or adjusts such equipment is informed:

(a) That such equipment may be contaminated with pesticides.

(b) Of the potentially harmful effects of exposure to pesticides.

(c) Of the correct way to handle such equipment.

[WSR 97-09-013, recodified as § 296-307-13035, filed 4/7/97, effective 4/7/97. Statutory Authority: RCW 49.17.040, [49.17.]050 and [49.17.]060. WSR 96-20-082, § 296-306A-13035, filed 9/30/96, effective 11/1/96.]

WAC 296-307-13040 Posted pesticide safety information—Standards for pesticide handlers—40 C.F.R., § 170.235. (1) Requirement. When handlers (except those employed by a commercial pesticide handling establishment) are on an agricultural establishment and, within the last thirty days, a pesticide covered by this part has been applied on the establishment or a restricted-entry interval has been in effect, the handler employer shall display, in accordance with this section, pesticide safety information.

(2) Pesticide safety poster. A safety poster must be displayed that conveys, at a minimum, the following basic pesticide safety concepts:

(a) Help keep pesticides from entering your body. At a minimum, the following points shall be conveyed:

(i) Avoid getting on your skin or into your body any pesticides that may be on plants and soil, in irrigation water, or drifting from nearby applications.

(ii) Wash before eating, drinking, using chewing gum or tobacco, or using the toilet.

(iii) Wear work clothing that protects the body from pesticide residues (long-sleeved shirts, long pants, shoes and socks, and a hat or scarf).

(iv) Wash/shower with soap and water, shampoo hair, and put on clean clothes after work.

(v) Wash work clothes separately from other clothes before wearing them again.

(vi) Wash immediately in the nearest clean water if pesticides are spilled or sprayed on the body. As soon as possible, shower, shampoo, and change into clean clothes.

(vii) Follow directions about keeping out of treated or restricted areas.

(b) There are federal rules to protect workers and handlers including a requirement for safety training.

(3) Emergency medical care information.

(a) The name, address, and telephone number of the nearest emergency medical care facility shall be on the safety poster or displayed close to the safety poster.

(b) The handler employer shall inform handlers promptly of any change to the information on emergency medical care facilities.

(4) Location.

(a) The information shall be displayed in a central location on the farm or in the nursery or greenhouse where it can be readily seen and read by handlers.

(b) The information shall be displayed in a location in or near the forest in a place where it can be readily seen and read by handlers and where handlers are likely to congregate or pass by, such as at a decontamination site or an equipment storage site.

(5) Accessibility. Handlers shall be informed of the location of the information and shall be allowed access to it.

(6) Legibility. The information shall remain legible during the time it is posted.

[WSR 97-09-013, recodified as § 296-307-13040, filed 4/7/97, effective 4/7/97. Statutory Authority: RCW 49.17.040, [49.17.]050 and [49.17.]060. WSR 96-20-082, § 296-306A-13040, filed 9/30/96, effective 11/1/96.]

WAC 296-307-13045 Personal protective equipment—Standards for pesticide handlers—40 C.F.R., § 170.240. (1) Requirement. Any person who performs tasks as a pesticide handler shall use the clothing and personal protective equipment specified on the labeling for use of the product.

(2) Definition.

(a) Personal protective equipment (PPE) means devices and apparel that are worn to protect the body from contact with pesticides or pesticide residues, including, but not limited to, coveralls, chemical-resistant suits, chemical-resistant gloves, chemical-resistant footwear, respiratory protection devices, chemical-resistant aprons, chemical-resistant headgear, and protective eyewear.

(b) Long-sleeved shirts, short-sleeved shirts, long pants, short pants, shoes, socks, and other items of work clothing are not considered personal protective equipment for the purposes of this section and are not subject to the requirements of this section, although pesticide labeling may require that such work clothing be worn during some activities.

(3) Provision. When personal protective equipment is specified by the labeling of any pesticide for any handling activity, the handler employer shall provide the appropriate personal protective equipment in clean and operating condition to the handler.

(a) When "chemical-resistant" personal protective equipment is specified by the product labeling, it shall be made of material that allows no measurable movement of the pesticide being used through the material during use.

(b) When "waterproof" personal protective equipment is specified by the product labeling, it shall be made of material that allows no measurable movement of water or aqueous solutions through the material during use.

(c) When a "chemical-resistant suit" is specified by the product labeling, it shall be a loose-fitting, one-piece or two-piece chemical-resistant garment that covers, at a minimum, the entire body except head, hands, and feet.

(d) When "coveralls" are specified by the product labeling, they shall be a loose-fitting, one-piece or two-piece garment, such as a cotton or cotton and polyester coverall, that covers, at a minimum, the entire body except head, hands, and feet. The pesticide product labeling may specify that the coveralls be worn over another layer of clothing.

(e)(i) Gloves shall be of the type specified on the pesticide product labeling. Gloves made of leather, cotton, or other absorbent material shall not be worn while mixing, loading, applying, or otherwise handling pesticides, unless gloves made of these materials are listed as acceptable for such use on the product labeling.

(ii) Separable glove liners may be worn beneath chemical-resistant gloves, unless the pesticide product labeling specifically prohibits their use. Separable glove liners are defined as separate glove-like hand coverings, made of lightweight material, with or without fingers. Work gloves made from lightweight cotton or poly-type material are considered to be glove liners if worn beneath chemical-resistant gloves. Separable glove liners may not extend outside the chemical-resistant gloves under which they are worn. Chemical-resistant gloves with nonseparable absorbent lining materials are prohibited.

(iii) If used, separable glove liners must be discarded immediately after a total of no more than ten hours of use or within twenty-four hours of when first put on, whichever comes first. The liners must be replaced immediately if directly contacted by pesticide. Used glove liners shall not be reused. Contaminated liners must be disposed of in accordance with any federal, state, or local regulations.

(f) When "chemical-resistant footwear" is specified by the product labeling, one of the following types of footwear must be worn:

(i) Chemical-resistant shoes.

(ii) Chemical-resistant boots.

(iii) Chemical-resistant shoe coverings worn over shoes or boots.

(g) When "protective eyewear" is specified by the product labeling, one of the following types of eyewear must be worn:

(i) Goggles.

(ii) Face shield.

(iii) Safety glasses with front, brow, and temple protection.

(iv) Full-face respirator.

(h) When a "chemical-resistant apron" is specified by the product labeling, an apron that covers the front of the body from mid-chest to the knees shall be worn.

(i) When a respirator is specified by the product labeling, it shall be appropriate for the pesticide product used and for the activity to be performed. The handler employer shall assure that the respirator fits correctly by using the procedures consistent with chapter 296-307 WAC, Part Y-5. If the label does not specify the type of respirator to be used, it shall meet the requirements of chapter 296-307 WAC, Part Y-5. The respiratory protection requirements of chapter 296-307 WAC, Part Y-5, shall apply.

(j) When "chemical-resistant headgear" is specified by the product labeling, it shall be either a chemical-resistant hood or a chemical-resistant hat with a wide brim.

(4) Exceptions to personal protective equipment specified on product labeling.

(a) Body protection.

(i) A chemical-resistant suit may be substituted for "coveralls," and any requirement for an additional layer of clothing beneath is waived.

(ii) A chemical-resistant suit may be substituted for "coveralls" and a chemical-resistant apron.

(b) Boots. If chemical-resistant footwear with sufficient durability and a tread appropriate for wear in rough terrain is not obtainable, then leather boots may be worn in such terrain.

(c) Gloves. If chemical-resistant gloves with sufficient durability and suppleness are not obtainable, then during handling activities with roses or other plants with sharp thorns, leather gloves may be worn over chemical-resistant glove liners. However, once leather gloves are worn for this use, thereafter they shall be worn only with chemical-resistant liners and they shall not be worn for any other use.

(d) Closed systems. If handling tasks are performed using properly functioning systems that enclose the pesticide to prevent it from contacting handlers or other persons, and if such systems are used and are maintained in accordance with that manufacturer's written operating instructions, exceptions

to labeling-specified personal protective equipment for the handling activity are permitted as provided in (d)(i) and (ii) of this subsection.

(i) Persons using a closed system to mix or load pesticides with a signal word of DANGER or WARNING may substitute a long-sleeved shirt, long pants, shoes, socks, chemical-resistant apron, and any protective gloves specified on the labeling for handlers for the labeling-specified personal protective equipment.

(ii) Persons using a closed system to mix or load pesticides other than those in (d)(i) of this subsection or to perform other handling tasks may substitute a long-sleeved shirt, long pants, shoes, and socks for the labeling-specified personal protective equipment.

(iii) Persons using a closed system that operates under pressure shall wear protective eyewear.

(iv) Persons using a closed system shall have all labeling-specified personal protective equipment immediately available for use in an emergency.

(e) Enclosed cabs. If handling tasks are performed from inside a cab that has a nonporous barrier which totally surrounds the occupants of the cab and prevents contact with pesticides outside of the cab, exceptions to personal protective equipment specified on the product labeling for that handling activity are permitted as provided in (e)(i) through (iv) of this subsection.

(i) Persons occupying an enclosed cab may substitute a long-sleeved shirt, long pants, shoes, and socks for the labeling-specified personal protective equipment. If a respiratory protection device is specified on the pesticide product labeling for the handling activity, it must be worn.

(ii) Persons occupying an enclosed cab that has a properly functioning ventilation system which is used and maintained in accordance with the manufacturer's written operating instructions and which is declared in writing by the manufacturer and by the Washington state department of labor and industries to provide respiratory protection equivalent to or greater than a dust/mist filtering respirator may substitute a long-sleeved shirt, long pants, shoes, and socks for the labeling-specified personal protective equipment. If a respiratory protection device other than a dust/mist-filtering respirator is specified on the pesticide product labeling, it must be worn.

(iii) Persons occupying an enclosed cab that has a properly functioning ventilation system which is used and maintained in accordance with the manufacturer's written operating instructions and which is declared in writing by the manufacturer and by the Washington state department of labor and industries to provide respiratory protection equivalent to or greater than the vapor-removing or gas-removing respirator specified on pesticide product labeling may substitute a long-sleeved shirt, long pants, shoes, and socks for the labeling-specified personal protective equipment. If an air-supplying respirator or a self-contained breathing apparatus (SCBA) is specified on the pesticide product labeling, it must be worn.

(iv) Persons occupying an enclosed cab shall have all labeling-specified personal protective equipment immediately available and stored in a chemical-resistant container, such as a plastic bag. They shall wear such personal protective equipment if it is necessary to exit the cab and contact pesticide-treated surfaces in the treated area. Once personal protective equipment is worn in the treated area, it must be removed before reentering the cab.

(f) Aerial applications.

(i) Use of gloves. The wearing of chemical-resistant gloves when entering or leaving an aircraft used to apply pesticides is optional, unless such gloves are required on the pesticide product labeling. If gloves are brought into the cockpit of an aircraft that has been used to apply pesticides, the gloves shall be kept in an enclosed container to prevent contamination of the inside of the cockpit.

(ii) Open cockpit. Persons occupying an open cockpit shall use the personal protective equipment specified in the product labeling for use during application, except that chemical-resistant footwear need not be worn. A helmet may be substituted for chemical-resistant headgear. A visor may be substituted for protective eyewear.

(iii) Enclosed cockpit. Persons occupying an enclosed cockpit may substitute a long-sleeved shirt, long pants, shoes, and socks for labeling-specified personal protective equipment.

(g) Crop advisors. Crop advisors entering treated areas while a restricted-entry interval is in effect may wear the personal protective equipment specified on the pesticide labeling for early entry activities instead of the personal protective equipment specified on the pesticide labeling for handling activities, provided:

(i) Application has been completed for at least four hours.

(ii) Any inhalation exposure level listed in the labeling has been reached or any ventilation criteria established by WAC 296-307-12015 (3)(c) or in the labeling have been met.

(5) Use of personal protective equipment.

(a) The handler employer shall assure that personal protective equipment is used correctly for its intended purpose and is used according to the manufacturer's instructions.

(b) The handler employer shall assure that, before each day of use, all personal protective equipment is inspected for leaks, holes, tears, or worn places, and any damaged equipment is repaired or discarded.

(6) Cleaning and maintenance.

(a) The handler employer shall assure that all personal protective equipment is cleaned according to the manufacturer's instructions or pesticide product labeling instructions before each day of reuse. In the absence of any such instructions, it shall be washed thoroughly in detergent and hot water.

(b) If any personal protective equipment cannot be cleaned properly, the handler employer shall dispose of the personal protective equipment in accordance with any applicable federal, state, and local regulations. Coveralls or other absorbent materials that have been drenched or heavily contaminated with an undiluted pesticide that has the signal word DANGER or WARNING on the label shall be not be reused.

(c) The handler employer shall assure that contaminated personal protective equipment is kept separately and washed separately from any other clothing or laundry.

(d) The handler employer shall assure that all clean personal protective equipment shall be either dried thoroughly before being stored or shall be put in a well ventilated place to dry.

(e) The handler employer shall assure that all personal protective equipment is stored separately from personal clothing and apart from pesticide-contaminated areas.

(f) The handler employer shall assure that when dust/mist filtering respirators are used, the filters shall be replaced:

(i) When breathing resistance becomes excessive.

(ii) When the filter element has physical damage or tears.

(iii) According to manufacturer's recommendations or pesticide product labeling, whichever is more frequent.

(iv) In the absence of any other instructions or indications of service life, at the end of each day's work period.

(g) The handler employer shall assure that when gas-removing or vapor-removing respirators are used, the gas-removing or vapor-removing canisters or cartridges shall be replaced:

(i) At the first indication of odor, taste, or irritation.

(ii) According to manufacturer's recommendations or pesticide product labeling, whichever is more frequent.

(iii) In the absence of any other instructions or indications of service life, at the end of each day's work period.

(h) The handler employer shall inform any person who cleans or launders personal protective equipment:

(i) That such equipment may be contaminated with pesticides.

(ii) Of the potentially harmful effects of exposure to pesticides.

(iii) Of the correct way(s) to clean personal protective equipment and to protect themselves when handling such equipment.

(i) The handler employer shall assure that handlers have a clean place(s) away from pesticide storage and pesticide use areas where they may:

(i) Store personal clothing not in use.

(ii) Put on personal protective equipment at the start of any exposure period.

(iii) Remove personal protective equipment at the end of any exposure period.

(j) The handler employer shall not allow or direct any handler to wear home or to take home personal protective equipment contaminated with pesticides.

(7) Heat-related illness. When the use of personal protective equipment is specified by the labeling of any pesticide for the handling activity, the handler employer shall assure that no handler is allowed or directed to perform the handling activity unless appropriate measures are taken, if necessary, to prevent heat-related illness.

Note: Additional requirements in WAC 296-307-097, Outdoor heat exposure, may apply between May 1st and September 30th of each year. See Part G-1.

[Statutory Authority: RCW 49.17.050. WSR 09-17-119, § 296-307-13045, filed 8/18/09, effective 10/1/09. Statutory Authority: RCW 49.17.010, 49.17.040, 49.17.050, and 49.17.060. WSR 09-07-098, § 296-307-13045, filed 3/18/09, effective 5/1/09; WSR 05-01-166, § 296-307-13045, filed 12/21/04, effective 4/2/05. Statutory Authority: RCW 49.17.040. WSR 98-24-096, § 296-307-13045, filed 12/1/98, effective 3/1/99. WSR 97-09-013, recodified as § 296-307-13045, filed 4/7/97, effective 4/7/97. Statutory Authority: RCW 49.17.040, [49.17.]050 and [49.17.]060. WSR 96-20-082, § 296-306A-13045, filed 9/30/96, effective 11/1/96.]

WAC 296-307-13050 Decontamination—Standards for pesticide handlers—40 C.F.R., § 170.250. (1) Requirement. During any handling activity, the handler employer shall provide for handlers, in accordance with this section, decontamination supplies for washing off pesticides and pesticide residues.

(2) General conditions.

(a) The handler employer shall provide handlers with enough water for routine washing, for emergency eyeflushing, and for washing the entire body in case of an emergency. At all times when the water is available to handlers, the handler employer shall assure that it is of a quality and temperature that will not cause illness or injury when it contacts the skin or eyes or if it is swallowed. At least ten gallons of water for one employee and twenty gallons of water for two or more employees shall be provided at mixing and loading sites that do not have running water.

(b) When water stored in a tank is to be used for mixing pesticides, it shall not be used for decontamination or eyeflushing, unless the tank is equipped with properly functioning valves or other mechanisms that prevent movement of pesticides into the tank.

(c) The handler employer shall provide soap and single-use towels in quantities sufficient to meet handlers' needs.

(d) The handler employer shall provide one clean change of clothing, such as coveralls for use in an emergency.

(3) Location. The decontamination supplies shall be located together and reasonably accessible to and not more than one-quarter mile from each handler during the handling activity.

(a) Exception for mixing sites. For mixing activities, the decontamination supplies shall be at the mixing site.

(b) Exception for pilots. The decontamination supplies for a pilot who is applying pesticides aerially shall be in the airplane or at the aircraft loading site.

(c) Exception for handling pesticides in remote areas. When handling activities are performed more than one-quarter mile from the nearest place of vehicular access:

(i) The soap, single-use towels, clean change of clothing, and water may be at the nearest place of vehicular access.

(ii) The handler employer may permit handlers to use clean water from springs, streams, lakes, or other sources for decontamination at the remote work site, if such water is more accessible than the water with the decontamination supplies located at the nearest place of vehicular access.

(d) Decontamination supplies in treated areas. The decontamination supplies shall not be in an area being treated with pesticides or in an area under a restricted-entry interval, unless:

(i) The decontamination supplies are in the area where the handler is performing handling activities;

(ii) The soap, single-use towels, and clean change of clothing are in enclosed containers; and

(iii) The water is running tap water or is enclosed in a container.

(4) Emergency eyeflushing. To provide for emergency eyeflushing, the handler employer shall assure that at least one pint of water is immediately available to each handler who is performing tasks for which the pesticide labeling requires protective eyewear. The eyeflush water shall be carried by the handler, or shall be on the vehicle or aircraft the handler is using, or shall be otherwise immediately accessible.

(5) A plumbed or portable emergency eyewash capable of delivering at least 1.5 liters (0.4 gals.) of water per minute for fifteen minutes shall be provided at all pesticide mixing and loading stations or handler decontamination sites when the label requires protective eyewear for mixing, loading or applying. A plumbed or portable system meeting the above requirements shall be provided at all permanent pesticide mixing and loading sites.

(6) Decontamination after handling activities. At the end of any exposure period, the handler employer shall provide at the site where handlers remove personal protective equipment, soap, clean towels, and a sufficient amount of water so that the handlers may wash thoroughly. At least ten gallons of water for one employee and twenty gallons of water for two or more employees shall be provided at mixing and loading sites that do not have running water.

[WSR 97-09-013, recodified as § 296-307-13050, filed 4/7/97, effective 4/7/97. Statutory Authority: RCW 49.17.040, [49.17.]050 and [49.17.]060. WSR 96-20-082, § 296-306A-13050, filed 9/30/96, effective 11/1/96.]

WAC 296-307-13055 Emergency assistance—Standards for pesticide handlers—40 C.F.R., § 170.260. If there is reason to believe that a person who is or has been employed by an agricultural establishment or commercial pesticide handling establishment to perform pesticide handling tasks has been poisoned or injured by exposure to pesticides as a result of that employment, including, but not limited to, exposures from handling tasks or from application, splash, spill, drift, or pesticide residues, the handler employer shall:

(1) Make available to that person prompt transportation from the place of employment or the handling site to an appropriate emergency medical facility.

(2) Provide to that person or to treating medical personnel, promptly upon request, any obtainable information on:

(a) Product name, EPA registration number, and active ingredients of any product to which that person might have been exposed.

(b) Antidote, first-aid, and other medical information from the product labeling.

(c) The circumstances of handling of the pesticide.

(d) The circumstances of exposure of that person to the pesticide.

[WSR 97-09-013, recodified as § 296-307-13055, filed 4/7/97, effective 4/7/97. Statutory Authority: RCW 49.17.040, [49.17.]050 and [49.17.]060. WSR 96-20-082, § 296-306A-13055, filed 9/30/96, effective 11/1/96.]

Part J

Pesticides Recordkeeping

WAC 296-307-145 Pesticides recordkeeping.

[WSR 97-09-013, recodified as § 296-307-145, filed 4/7/97, effective 4/7/97. Statutory Authority: RCW 49.17.040, [49.17.]050 and [49.17.]060. WSR 96-22-048, § 296-306A-145, filed 10/31/96, effective 12/1/96.]

WAC 296-307-14505 What records must an employer keep for pesticide applications? (1) If you apply pesticides, or have pesticides applied for you, related to the production of an agricultural crop, you must keep records for each application. The records must include the following:

(a) The address or exact location where the pesticide was applied or stored;

Note: If you apply pesticides to one acre or more, the location must be shown on the map on the required form for at least the first application.

(b) The year, month, day, and time the pesticide was applied or stored;

(c) The product name on the registered label and the United States Environmental Protection Agency registration number, if applicable, of the pesticide that was applied or stored;

(d) The crop or site to which the pesticide was applied (application crop or site);

(e) The amount of pesticide applied per acre, or other appropriate measure;

(f) The concentration of pesticide applied;

(g) The total area to which pesticide was applied;

(h) If applicable, the licensed applicator's name, address, and telephone number and the name of the individual(s) making the application;

(i) The direction and estimated velocity of the wind at the time the pesticide was applied;

Exception: Wind information does not have to be recorded for applications of baits in bait stations and pesticide applications within structures.

(j) Any other reasonable information required by the department.

(2) A commercial pesticide applicator must provide a copy of the pesticide application records to the owner or lessee of the lands to which the pesticide is applied. Pesticide application records may be provided on any form that includes all required information.

(3) You must update records on the same day that a pesticide is applied. You may use a copy as the record of the pesticide application. You must maintain the records for at least seven years after the date of the application.

(4) You must ensure that pesticide application records are readily accessible to employees and their designated representatives in a central location in the workplace. The records must be available beginning on the day the application is made and for at least thirty days after. You may view the pesticide application records and make your own record from that information.

(5) New or newly assigned employees must be made aware of the accessibility of the application records before working with pesticides or in an area containing pesticides.

(6) When storing pesticides, you must, at least once a year, perform an inventory of the pesticides stored in any work area.

(7) The pesticide inventory records must include the following information:

(a) The location where the pesticide is stored;

(b) The year, month, day, and time the pesticide was first stored;

(c) The product name used on the registered label and the United States Environmental Protection Agency registration number, if applicable, of the pesticide that is stored; and

(d) The amount of pesticide in storage at the time of the inventory.

(8) You must maintain a record of pesticide purchases made between the annual inventory dates.

(a) Instead of this purchase record, you may obtain from distributors from whom you buy pesticides, a statement obligating the distributor to maintain the purchase records on your behalf to meet the requirements of this section.

(b) We may require you to submit all purchase records covering the purchases during a specified period of time or in a specified geographical area.

(9) When you end all pesticide activities, you must file the records with us. Anyone who succeeds or replaces you must retain the records required by this section, but that person is not liable for any violations you commit.

(10) You must ensure that the records required under this section are readily accessible to us for inspection. You must also provide copies of the records on request, to:

(a) An employee or the employee's designated representative in the case of an industrial insurance claim filed under Title 51 RCW with the department of labor and industries;

(b) Treating health care personnel; or

(c) The pesticide incident reporting and tracking review panel.

(11) The designated representative or treating health care personnel are not required to identify the employee represented or treated.

(12) We will keep the name of any affected employee confidential according to RCW 49.17.080(1).

(13) When treating health care personnel request records under this section, and the record is required to determine treatment, you must provide copies of the record immediately. Information for treating health care personnel must be made immediately available by telephone, if requested, with a copy of the records provided within twenty-four hours. For all other requests, you must provide copies of the records within seventy-two hours.

(14) If requested, you must provide copies of records on a form provided by the department.

(15) If you suspect that an employee is ill or injured because of an exposure to one or more pesticides, you must immediately provide the employee with a copy of the relevant pesticide application records.

(16) If you refuse to provide a copy of a requested record, the requester may notify the department of the request and your refusal.

(a) Within seven working days, we will request that you provide us with all pertinent copies of the records, except that in a medical emergency we will request within two working days.

(b) You must provide copies of the records to us within twenty-four hours after we request.

(17) We inspect for the records required under this section as part of any on-site inspection of a workplace conducted under this chapter or chapter 49.17 RCW. We will determine, during the inspection, whether the records are readily transferable to a form adopted by the department, and readily accessible to employees. However, your records will not be inspected more than once in any calendar year, unless a previous inspection has found recordkeeping violations. If recordkeeping violations are found, we may conduct reasonable multiple inspections, according to department rules. Nothing in this section limits our inspection of records pertaining to pesticide-related injuries, illnesses, fatalities, accidents, or complaints.

(18) If you fail to maintain the records, or provide access to or copies of the records required under this section, you will be subject to penalties authorized under RCW 49.17.180.

(19) The department of labor and industries and the department of agriculture will jointly adopt by rule, forms that satisfy the information requirements of this section and RCW 17.21.100. Pesticide application record forms can be found in chapter 16-228 WAC, General pesticide rules.

[Statutory Authority: RCW 49.17.010, 49.17.040, 49.17.050, and 49.17.060. WSR 04-13-129, § 296-307-14505, filed 6/22/04, effective 8/1/04. Statutory Authority: RCW 49.17.010, [49.17].040, and [49.17].050. WSR 01-17-033, § 296-307-14505, filed 8/8/01, effective 9/1/01. WSR 97-09-013, recodified as § 296-307-14505, filed 4/7/97, effective 4/7/97. Statutory Authority: RCW 49.17.040, [49.17.]050 and [49.17.]060. WSR 96-22-048, § 296-306A-14505, filed 10/31/96, effective 12/1/96.]

WAC 296-307-14510 Sample pesticide storage record.

State Department of Labor & hdustries
Division of Industrial Safety & Health
PO Box 207
Olympia, WA 98507-0207

PESTICIDE STORAGE RECORD

1. Name of person storing pesticide

2. Name of pesticide owner | Telephone

3. Owner's address | City | State | Zip

4. Pesticide Information

Date	Product Information	Active Ingredients (common name)	EPA Reg. No.	Amount Stored

6. Location Storage:

b) Street address

b) If a street location is not appropriate, pinpoint the location of the storage and describe the location:

Township N

Range E or W

Section(s)

County

[Statutory Authority: RCW 49.17.010, 49.17.040, 49.17.050, and 49.17.060. WSR 04-13-129, § 296-307-14510, filed 6/22/04, effective 8/1/04. WSR 97-09-013, recodified as § 296-307-14510, filed 4/7/97, effective 4/7/97. Statutory Authority: RCW 49.17.040, [49.17.]050 and [49.17.]060. WSR 96-22-048, § 296-306A-14510, filed 10/31/96, effective 12/1/96.]

Part J-1

Cholinesterase Monitoring

WAC 296-307-148 Scope and summary.

Your responsibility:

To implement a monitoring program for your employees who, as part of their job duties, **handle** category I or II organophosphate or N-methyl-carbamate pesticides with the words "DANGER" or "WARNING" on the label.

Definition:

The terms **handle** and **handler** refer to employees who are engaged in the job duties listed in the definition of "handler" contained in WAC 296-307-11005, Pesticides (worker protection standard).

IMPORTANT:

Whenever there is reason to believe that an employee has been poisoned or injured by exposure to pesticides while on the job, you need to provide the medical services required by WAC 296-307-13055.

You must:

Maintain handling records for covered pesticides WAC 296-307-14805.

Implement a medical monitoring program WAC 296-307-14810.

Identify a physician or licensed health care professional
WAC 296-307-14815.
Make cholinesterase testing available
WAC 296-307-14820.
Respond to depressed cholinesterase levels
WAC 296-307-14825.
Provide medical removal protection benefits
WAC 296-307-14830.
Maintain records
WAC 296-307-14835.
Provide training
WAC 296-307-14840.
Implementation plan
WAC 296-307-14845.

[Statutory Authority: RCW 49.17.010, 49.17.040, 49.17.050, and 49.17.060. WSR 03-24-105, § 296-307-148, filed 12/3/03, effective 2/1/04.]

WAC 296-307-14805 Maintain handling records for covered pesticides.

You must:

• Maintain accurate records of all time that each employee spends handling category I or II organophosphate or N-methyl-carbamate pesticides (this includes employees who do not meet the handling hour thresholds in WAC 296-307-14810).

• Provide a completed CHOLINESTERASE MONITORING HANDLING HOURS REPORT (F413-065-000) to the physician or other licensed health care professional (LHCP) for each employee receiving a periodic cholinesterase blood test and make sure the report is submitted to the laboratory with each periodic cholinesterase test.

• Provide the employee with a copy of the CHOLINESTERASE MONITORING HANDLING HOURS REPORT upon request.

• Retain pesticide handling records for seven years.

• Make sure that pesticide-handling records are readily accessible to employees, their designated representatives, and treating health care professionals.

[Statutory Authority: RCW 49.17.010, 49.17.040, 49.17.050, 49.17.060. WSR 06-01-074, § 296-307-14805, filed 12/20/05, effective 2/1/06; WSR 03-24-105, § 296-307-14805, filed 12/3/03, effective 2/1/04.]

WAC 296-307-14810 Implement a medical monitoring program.

You must:

• Implement a medical monitoring program for your employees who handle or will be expected to handle category I or II organophosphate or N-methyl-carbamate pesticides for thirty or more hours in any consecutive thirty-day period.

Note: • You do not need to count time spent mixing and loading using closed systems (as defined in WAC 296-307-13045 (4)(d)) in determining the need for periodic testing. Closed cabs are not "closed systems." Time using closed systems is still counted for purposes of establishing coverage under this rule and determining the need for obtaining baseline cholinesterase levels.

• The first thirty consecutive day period begins on the first day of handling organophosphate or N-methyl-carbamate pesticides after obtaining the baseline cholinesterase test.

• There is nothing in this rule that prohibits employers from providing cholinesterase monitoring to employees who handle organophosphate or N-methyl-carbamate pesticides for fewer than thirty hours in any consecutive thirty-day period.

[Statutory Authority: RCW 49.17.010, 49.17.040, 49.17.050, 49.17.060. WSR 06-01-074, § 296-307-14810, filed 12/20/05, effective 2/1/06; WSR 03-24-105, § 296-307-14810, filed 12/3/03, effective 2/1/04.]

WAC 296-307-14815 Identify a physician or other licensed health care professional.

You must:

• Identify a physician or other licensed health care professional (LHCP) who will:

- Provide baseline and periodic cholinesterase testing through the department of health public health laboratory or a laboratory approved by the department of labor and industries.

- Interpret cholinesterase tests.

- Provide you with a written recommendation for each employee's blood test and evaluation.

• Obtain the LHCP's written recommendation for each employee's blood test and evaluation (including baseline tests) and make sure that the employee receives a copy of the LHCP's written recommendation, either through you or directly through the LHCP, within five business days after you receive the recommendation.

• Make sure the LHCP's written recommendation for each employee's blood test and evaluation is limited to the following information:

- The employee's cholinesterase status based on the LHCP's evaluation.

- Identification of changes in cholinesterase levels requiring a work practice evaluation for the employee.

- Identification of changes in cholinesterase levels requiring the employee to be removed from handling and other exposure to organophosphate and N-methyl-carbamate pesticides.

- Guidance on medical monitoring.

- Any other relevant information concerning an employee's workplace exposure to organophosphate and N-methyl-carbamate pesticides.

Note: All testing for an employee should be conducted through the same laboratory. This will allow for accurate comparison between baseline and periodic tests.

You must:

• Instruct the LHCP to **NOT** reveal in writing or in any other communication with you any other personally identifiable medical information.

Note: If the LHCP written recommendation contains specific findings or diagnoses unrelated to occupational exposure, you should send it back and obtain a revised version without the additional information.

You must:

• Make sure the LHCP is familiar with the requirements of this rule (for example, by providing a copy of the rule or by confirming that the provider has attended training on the rule).

• Post the name, address, and telephone number of the LHCP you have identified at the locations where employees usually start their work day.

• Make sure written recommendations from the LHCP are maintained for seven years.

Note: You may only obtain the employee's actual test results if the employee provides the LHCP with written consent to share these results with you.

[Statutory Authority: RCW 49.17.010, 49.17.040, 49.17.050, 49.17.060. WSR 06-01-074, § 296-307-14815, filed 12/20/05, effective 2/1/06; WSR 03-24-105, § 296-307-14815, filed 12/3/03, effective 2/1/04.]

WAC 296-307-14820 Make cholinesterase testing available.

You must:

• Make medical monitoring available to employees who will meet the handling hour threshold of thirty or more hours in any consecutive thirty-day period (WAC 296-307-14810) at no cost and at a reasonable time and place, as follows:

- Provide annual baseline red blood cell (RBC) and serum cholinesterase tests that are taken at least thirty days after the employee last handled organophosphate or N-methyl-carbamate pesticides.

- Provide periodic RBC and serum cholinesterase testing:

■ Within three days after the end of each thirty-day period where the employee meets the handling hour threshold in WAC 296-307-14810; however, testing is not required more often than every thirty days;

OR

■ At least every thirty days for those employees who may meet the handling hour threshold in WAC 296-307-14810.

- Follow the recommendations of the LHCP regarding continued employee pesticide handling or removal from handling until a thirty-day exposure free baseline can be established.

Exemption: You do not need to provide baseline or periodic testing for those employees whose work exposure is limited to handling only N-methyl-carbamate pesticides.

Note: • For employees who have had exposure to organophosphate or N-methyl-carbamate pesticides in the thirty days prior to the test obtain a working baseline. For example, a worker who initially declines cholinesterase testing and later chooses to participate in testing would obtain a "working baseline."

• For new employees, the LHCP may accept previous baselines, if they are obtained according to this rule.

You must:

• Obtain a signed declination statement from the LHCP for each employee who declines cholinesterase testing.

- Employees may decline cholinesterase testing only after they receive training about cholinesterase inhibiting pesticides and discuss the risks and benefits of participation with the LHCP.

- An employee may change his or her mind and elect to participate or decline to continue participation in the testing program at any time.

• Make sure the employee receives a copy of the signed declination statement, either through you or directly through the LHCP, within five business days after you receive the declination statement.

Note: If employers discourage participation in cholinesterase monitoring, or in any way interfere with an employee's decision to continue with this program, this interference may represent unlawful discrimination under RCW 49.17.160, Discrimination against employee filing, instituting proceedings, or testifying prohibited—Procedure—Remedy.

[Statutory Authority: RCW 49.17.010, 49.17.040, 49.17.050, 49.17.060. WSR 06-01-074, § 296-307-14820, filed 12/20/05, effective 2/1/06; WSR 03-24-105, § 296-307-14820, filed 12/3/03, effective 2/1/04.]

WAC 296-307-14825 Respond to depressed cholinesterase levels.

You must:

• Respond to an employee's depressed cholinesterase levels by:

- Taking the actions required in Table 1;

AND

- Following any additional occupational health recommendations from the LHCP.

Table 1
Required Responses to an Employee's Depressed Cholinesterase Levels

When:	Action to be taken:	Methods:
An employee's RBC or serum cholinesterase levels fall more than twenty percent below the baseline	Evaluate the employee's workplace and work practices to identify and correct potential sources of pesticide exposure	Review:
		• Personal protective equipment (PPE) and its condition
		• Employees' PPE usage
		• General sanitation and decontamination practices and availability of decontamination facilities required by WAC 296-307-13050
		• Pesticide handling practices
		• Pesticide label requirements
An employee's RBC cholinesterase level falls thirty percent or more from the baseline **OR** An employee's serum cholinesterase level falls forty percent or more from the baseline	Remove the employee from handling and other work exposures to organophosphate and N-methyl-carbamate pesticides such as thinning and harvesting in recently treated areas **AND** Evaluate the employee's work practices to identify and correct potential sources of pesticide exposure	• When available, provide the employee with other duties that do not include handling and other work exposures to organophosphate and N-methyl-carbamate pesticides
		• Provide medical monitoring and cholinesterase testing as recommended by the LHCP
		• Provide salary and benefits as if employee was continuing pesticide application activities
A removed employee's cholinesterase levels return to twenty percent or less below baseline	The employee may return to handling class I and II organophosphate and N-methyl-carbamate pesticides	Continue periodic cholinesterase monitoring

[Statutory Authority: RCW 49.17.010, 49.17.040, 49.17.050, 49.17.060. WSR 06-01-074, § 296-307-14825, filed 12/20/05, effective 2/1/06; WSR 03-24-105, § 296-307-14825, filed 12/3/03, effective 2/1/04.]

WAC 296-307-14830 Provide medical removal protection benefits.

You must:

• Provide medical removal protection benefits for a maximum of three months on each occasion:

- An employee is temporarily removed from work due to depressed cholinesterase levels;

OR

- Assigned to other duties due to depressed cholinesterase levels.

• Provide medical removal protection benefits that include maintenance of the same pay, seniority and other employment rights and benefits of an employee as though the employee had not been removed from normal exposure to organophosphate or N-methyl-carbamate pesticides or otherwise limited.

Note: The following are examples of how a worker's pay could be maintained while medically removed from exposure to cholinesterase-inhibiting pesticides:

• A removed worker is assigned to work eight hours a day but the employer's pesticide handlers are working ten hours a day. The removed worker would be paid for ten hours at the handler's pay rate.

• The farmer pays workers two dollars more per hour when they are handling organophosphate or N-methyl-carbamate pesticides. The removed worker will be paid this premium when the pesticides are being handled on the farm; however, the worker will be paid at their usual pay rate when the pesticides are not being handled on the farm.

[Statutory Authority: RCW 49.17.010, 49.17.040, 49.17.050, 49.17.060. WSR 06-01-074, § 296-307-14830, filed 12/20/05, effective 2/1/06; WSR 03-24-105, § 296-307-14830, filed 12/3/03, effective 2/1/04.]

WAC 296-307-14835 Maintain records.

You must:

• Make sure that the following records are maintained:

- The name, address, and telephone number of the physician or LHCP.

- Written recommendations and opinions received from the physician or LHCP.

- Findings of all work practice investigations.

- Dates when employees were medically removed from their duties and dates when employees are returned to duties that include handling organophosphate or N-methyl-carbamate pesticides.

- Signed declination statements.

• Maintain records for seven years.

• Make sure that all records are readily accessible to the employee and his or her designated representative.

[Statutory Authority: RCW 49.17.010, 49.17.040, 49.17.050, and 49.17.060. WSR 03-24-105, § 296-307-14835, filed 12/3/03, effective 2/1/04.]

WAC 296-307-14840 Provide training.

You must:

• Make sure employees have received training before initial medical monitoring. The training must include at least the following:

- The human health hazards and physical symptoms of overexposure to organophosphate and N-methyl-carbamate cholinesterase-inhibiting pesticides.

- The purpose and requirements for medical monitoring.

Note: Training required by this rule may be combined with other pesticide handler training as required by WAC 296-307-13025, Pesticide safety training—Standards for pesticide handlers.

[Statutory Authority: RCW 49.17.010, 49.17.040, 49.17.050, and 49.17.060. WSR 03-24-105, § 296-307-14840, filed 12/3/03, effective 2/1/04.]

WAC 296-307-14845 Implementation plan. The department will implement and complete an evaluation of this rule by doing the following:

• Organize a scientific team to oversee collection and analysis of data collected during 2004 and 2005. L&I will select representatives of the University of Washington, Washington State University, as well as other interested members of the academic and scientific communities, to participate on the team. The team will provide an initial analysis of testing data and any appropriate recommendations directly to L&I and to the cholinesterase monitoring advisory committee by November 1, 2004, and a further analysis and any appropriate recommendations by November 1, 2005. A final report and recommendations will be completed by September 30, 2006.

• Establish a cholinesterase stakeholder advisory committee to evaluate issues related to rule implementation and provide recommendations to the department regarding implementation of the rule and any possible modifications to it. L&I will invite representatives of growers, labor and other affected state agencies to participate on the advisory committee. The committee will have an opportunity to comment on the analysis completed by the scientific team and to make any appropriate recommendations before December 1, 2004, and again before December 1, 2005. In addition, the committee will review the scientific committee's final report and recommendations and provide advice to L&I prior to December 1, 2006.

• Review reports from the scientific team and stakeholder advisory committee, and other relevant information and make modifications to the rule as appropriate.

• Make efforts to defray the costs of medical testing during 2004.

• Prepare and distribute provider guidelines.

• Develop and make available a model employee training program.

• Publish a list of trained providers and certified laboratories on the internet.

• Coordinate recordkeeping requirements with the department of agriculture.

[Statutory Authority: RCW 49.17.010, 49.17.040, 49.17.050, and 49.17.060. WSR 03-24-105, § 296-307-14845, filed 12/3/03, effective 2/1/04.]

Part K

Working Near Overhead Lines

WAC 296-307-150 Employees working near overhead lines.

[WSR 97-09-013, recodified as § 296-307-150, filed 4/7/97, effective 4/7/97. Statutory Authority: RCW 49.17.040, [49.17.]050 and [49.17.]060. WSR 96-22-048, § 296-306A-150, filed 10/31/96, effective 12/1/96.]

WAC 296-307-15003 What does this section cover? WAC 296-307-150 does not apply to the construction, recon-

struction, operation, or maintenance of overhead electrical conductors (and their supporting structures and associated equipment) by authorized and qualified electrical employees. It also does not apply to authorized and qualified employees engaged in the construction, reconstruction, operations and maintenance of overhead electrical circuits or conductors (and their supporting structures and associated equipment) of rail transportation systems, or electrical generating, transmission, distribution, and communication systems.

[Statutory Authority: RCW 49.17.040. WSR 98-24-096, § 296-307-15003, filed 12/1/98, effective 3/1/99. WSR 97-09-013, recodified as § 296-307-15003, filed 4/7/97, effective 4/7/97. Statutory Authority: RCW 49.17.040, [49.17.]050 and [49.17.]060. WSR 96-22-048, § 296-306A-15003, filed 10/31/96, effective 12/1/96.]

WAC 296-307-15006 What clearance and safeguards are required to protect employees working near overhead lines? (1) All exposed overhead conductors must be isolated from accidental contact by employees or equipment.

(2) Irrigation pipe must not be stored within one hundred feet of overhead conductors.

(3) Upending irrigation pipe within one hundred feet of overhead conductors is prohibited.

(4) Water and irrigation systems, and other devices that discharge a conductive liquid, must be set up and operated so that the discharge from the system is directed more than ten feet away from overhead high-voltage lines, and avoids contact with any exposed electrical power conductor.

(5) Employees are prohibited from entering or working in proximity to high-voltage lines, unless there are guards to prevent accidental contact.

Note: Voltage 600V and higher is considered high voltage.

(6) The following are prohibited if it is possible to bring these objects within ten feet of high-voltage lines:

(a) Operating, erecting, or transporting tools, equipment, or a moving part;

(b) Handling, transporting, or storing materials; or

(c) Moving a building near high-voltage lines.

(7) Equipment or machines must be operated near power lines according to the following:

(a) For lines rated 50 kv. or below, minimum clearance between the lines and any part of the object must be ten feet;

(b) For lines rated over 50 kv. minimum clearance between the lines and any part of the object must be ten feet plus four tenths of an inch for each 1 kv., over 50 kv., or twice the length of the line insulator but never less than ten feet;

(c) In transit, the clearance must be a minimum of four feet for voltages less than 50 kv., ten feet for voltages over 50 kv. up to and including 345 kv., and sixteen feet for voltages up to and including 750 kv.;

(d) You must designate someone to observe clearance and give warning for operations where it is difficult for the operator to see well enough to maintain the necessary clearance.

Exception: You are exempt from this requirement if electrical distribution and transmission lines have been deenergized and visibly grounded at point of work; or if insulating barriers, not a part of or an attachment to the equipment or machinery, have been erected to prevent physical contact with the lines.

[WSR 97-09-013, recodified as § 296-307-15006, filed 4/7/97, effective 4/7/97. Statutory Authority: RCW 49.17.040, [49.17.]050 and [49.17.]060. WSR 96-22-048, § 296-306A-15006, filed 10/31/96, effective 12/1/96.]

WAC 296-307-15009 What signs must an employer post to warn employees working near overhead lines? You must post and maintain in plain view of the operator on each derrick, power-shovel, drilling-rig, hay loader, hay stacker, or similar apparatus with parts that are capable of vertical, lateral or swinging motion, a durable warning sign legible at twelve feet that says, "unlawful to operate this equipment within ten feet of high-voltage lines."

[WSR 97-09-013, recodified as § 296-307-15009, filed 4/7/97, effective 4/7/97. Statutory Authority: RCW 49.17.040, [49.17.]050 and [49.17.]060. WSR 96-22-048, § 296-306A-15009, filed 10/31/96, effective 12/1/96.]

WAC 296-307-15012 When must an employer notify the utility of employees working near overhead lines? The employer must notify the operator of high-voltage lines when any operations are to be performed, tools or materials handled, or equipment is to be moved or operated within ten feet of any high-voltage line. All required safety measures must be completed before proceeding with any work that would reduce the clearance requirements of this section.

[WSR 97-09-013, recodified as § 296-307-15012, filed 4/7/97, effective 4/7/97. Statutory Authority: RCW 49.17.040, [49.17.]050 and [49.17.]060. WSR 96-22-048, § 296-306A-15012, filed 10/31/96, effective 12/1/96.]

Part L

Temporary Worker Housing

WAC 296-307-161 Temporary worker housing and cherry harvest camps.

[Statutory Authority: RCW 49.17.010, 49.17.040, 49.17.050, and 49.17.060. WSR 15-13-092, § 296-307-161, filed 6/15/15, effective 7/16/15. Statutory Authority: RCW 49.17.010, [49.17].040, and [49.17].050 and 1999 c 374. WSR 00-06-081, § 296-307-161, filed 3/1/00, effective 3/1/00.]

WAC 296-307-16101 Purpose and applicability. (1) Purpose. This part is adopted by the Washington state department of labor and industries to implement the provisions of chapter 49.17 RCW and establish minimum health and safety requirements for temporary worker housing and cherry harvest camps.

(2) Applicability. This part applies to:

(a) Temporary worker housing, including cherry harvest camps, provided by agricultural employers or operators in the state of Washington; and

(b) Operators of temporary worker housing shall be licensed under this chapter if the housing meets the criteria identified in WAC 296-307-161.

For licensing requirements, see WAC 246-358-025, Licensure. For self-survey requirements, see WAC 246-358-027, Requirements for self-survey program. For enforcement requirements, see WAC 246-358-028, Enforcement.

Note: The requirements in this part only apply to residents of the TWH facility who are also employees of the TWH facility owner. Requirements that would apply to other TWH residents, such as family members, who are not employees of the TWH facility owner, are in chapter 246-358 WAC, Temporary worker housing.

[Statutory Authority: RCW 49.17.010, 49.17.040, 49.17.050, and 49.17.060. WSR 15-13-092, § 296-307-16101, filed 6/15/15, effective 7/16/15. Statutory Authority: RCW 49.17.010, [49.17].040, and [49.17].050 and 1999 c 374. WSR 00-06-081, § 296-307-16101, filed 3/1/00, effective 3/1/00.]

WAC 296-307-16103 Definitions. The following definitions apply throughout this chapter unless the context clearly indicates otherwise:

Agricultural employee. Any person who renders personal services to, or under the direction of, an agricultural employer in connection with the employer's agricultural activity.

Agricultural employer. Any person engaged in agricultural activity, including the growing, producing, or harvesting of farm or nursery products, or engaged in the forestation or reforestation of lands, which includes, but is not limited to, the planting, transplanting, tubing, precommercial thinning, and thinning of trees and seedlings, the clearing, piling, and disposal of brush and slash, the harvest of Christmas trees, and other related activities.

Bathing facility. An enclosed area provided by the operator for workers to bathe or shower, and may be located within a family shelter or a common facility.

Building. Any structure used or intended by the operator to be used by workers for cooking, eating, sleeping, sanitation, or other facilities.

Cherry harvest camp. A place where housing and related facilities are provided to agricultural employees by agricultural employers or TWH operators for their use while employed for the harvest of cherries in the state of Washington. Cherry harvest camps are the only TWH site allowing tents.

Common. A shared facility provided by the operator for all workers of the TWH.

Common areas. Housing areas shared or used by one or more families or unrelated individuals.

Current certificate (first aid). A first-aid training certificate that has not expired.

Dining hall. A cafeteria-type eating place with food furnished by and prepared under the direction of the operator for consumption, with or without charge, by workers.

Drinking fountain. A fixture equal to a nationally recognized standard or a designed-to-drain faucet, which provides potable drinking water under pressure. "Drinking fountain" does not mean a bubble-type water dispenser.

Dwelling unit. A shelter, building, or portion of a building, which may include cooking and eating facilities, that are:

(a) Provided and designated by the operator as either a sleeping area, living area, or both, for occupants; and

(b) Physically separated from other sleeping and common areas. "Physically separated" means a physical wall separating rooms.

Family shelter. A dwelling unit with sleeping facilities for up to fifteen workers that may include toilet or cooking facilities. If services such as bathing, food-handling, or toilet facilities are provided in the family shelter, they are for the sole use of the occupants of the family shelter.

First-aid trained. The person holds a current certificate of first-aid training.

Floor space. The area within a dwelling unit with a minimum ceiling height of seven feet.

Food-handling facility. An enclosed area provided by the operator for workers to prepare their own food, and may be within a family shelter or common facility.

Group A public water system. A public water system as defined and referenced under WAC 246-290-020.

Group B public water system. A public water system that is not a Group A public water system, and is defined and referenced under WAC 246-291-050.

Habitable room. A room or space in a structure used for living, sleeping, eating, or cooking. Bathing facilities, toilet facilities, closets, halls, storage or utility space, and similar areas are not considered habitable rooms.

Health officer. The individual appointed as such for a local health department under chapter 70.05 RCW or appointed as the director of public health of a combined city-county health department under chapter 70.08 RCW.

Livestock. Horses, cows, pigs, sheep, goats, poultry, etc.

Livestock operation. Any place, establishment, or facility consisting of pens or other enclosures in which livestock is kept for purposes including, but not limited to, feeding, milking, slaughter, watering, weighing, sorting, receiving, and shipping. Livestock operations include, among other things, dairy farms, corrals, slaughterhouses, feedlots, and stockyards. Operations where livestock can roam on a pasture over a distance may be treated as outside the definition.

MSPA. The Migrant and Seasonal Agricultural Worker Protection Act (96 Stat. 2583; 29 U.S.C. Sec. 1801 et seq.).

Occupant. A temporary employee or a person who resides with a temporary worker at the TWH or camp.

Operating license or **license.** A document issued annually by the department of health.

Operator. A person holding legal title to the land on which the TWH or camp is located. However, if the legal title and the right to possession are in different persons, "operator" means a person having the lawful control or supervision over the TWH.

Recreational park trailers. A trailer-type unit that is primarily designed to provide temporary living quarters for recreational, camping, or seasonal use, that meets the following criteria:

(a) Built on a single chassis, mounted on wheels;

(b) Having a gross trailer area not exceeding 400 square feet (37.15 square meters) in the set-up mode;

(c) Certified by the manufacturer as complying with ANSI A119.5; and

(d) Chapter 296-150P WAC.

Recreational vehicle. A vehicular-type unit that is compliant with chapter 296-150R WAC and primarily designed as temporary living quarters for recreational camping, travel, or seasonal use that either has its own motive of power or is mounted on, or towed by, another vehicle. Recreational vehicles include: Camping trailers, fifth-wheel trailers, motor homes, travel trailers, and truck campers, but does not include pickup trucks with camper shells, canopies, or other similar coverings.

Refuse. Solid wastes, rubbish, or garbage.

Temporary worker or **worker.** An agricultural employee employed intermittently and not residing year-round at the same TWH site.

TWH, temporary worker housing or **housing.** A place, area, or piece of land where sleeping places or housing

sites are provided by an agricultural employer for agricultural employees or by another person, including a temporary worker housing operator, who is providing such accommodations for employees for temporary, seasonal occupancy. TWH includes cherry harvest camps.

Tent. An enclosure or shelter constructed of fabric or pliable material composed of rigid framework to support tensioned membrane that provides the weather barrier.

WISHA. The Washington Industrial Safety and Health Act, chapter 49.17 RCW, administered by the Washington state department of labor and industries.

Worker-supplied housing. Housing owned by the worker and made available to the same worker on the operator's TWH site. Worker-supplied housing includes recreational park trailers, recreational vehicles, tents, or other structures that meet the requirements of this chapter.

[Statutory Authority: RCW 49.17.010, 49.17.040, 49.17.050, and 49.17.060. WSR 15-13-092, § 296-307-16103, filed 6/15/15, effective 7/16/15. Statutory Authority: RCW 49.17.010, [49.17].040, and [49.17].050 and 1999 c 374. WSR 00-06-081, § 296-307-16103, filed 3/1/00, effective 3/1/00.]

WAC 296-307-16104 Technical assistance—Notice of violation. (1) The department of health or the department of labor and industries may provide technical assistance to assist in compliance with this chapter if requested by an operator.

(2) The department of labor and industries will only provide technical assistance to cherry harvest camps if requested by an operator.

(3) During a consultative technical assistance visit, or within a reasonable time thereafter, the department shall inform the owner or operator of the TWH on any violations of law or agency rules as follows:

(a) A description of the condition that is not in compliance and the text of the specific section or subsection of the applicable law or rule;

(b) A statement of what is required to achieve compliance;

(c) The date by which the agency requires compliance to be achieved;

(d) Notice of the means to contact any technical assistance services provided by the agency or others; and

(e) Notice of when, where, and to whom a request to extend the time to achieve compliance for good cause may be filed with the agency.

[Statutory Authority: RCW 49.17.010, 49.17.040, 49.17.050, and 49.17.060. WSR 15-13-092, § 296-307-16104, filed 6/15/15, effective 7/16/15.]

WAC 296-307-16115 Maximum capacity for TWH occupants. (1) Operator-supplied dwelling unit capacity will be based on:

(a) The square footage of the floor space in habitable rooms provided for sleeping purposes as described in WAC 296-307-16145(13) and Table 1 of this section; and

(b) The number of bathing, food handling, handwashing, laundry, and toilet facilities as described in WAC 296-307-16150 through 296-307-16165.

(2) Worker-supplied housing will be based on the number of spaces designated by the operator for worker-supplied housing.

(3) Operators may take into consideration the services provided by the worker-supplied housing to ensure all ratios for services required by this chapter are met for all occupants. If the ratios for services are not met, then the operator must provide common facility capacity for bathing, food handling, handwashing, laundry, and toilet facilities.

Table 1
TWH Maximum Capacity

Floor space requirements	**Sleeping room only**			**Sleeping room with kitchen**		
	50 square feet per occupant			100 square feet per temporary worker		
Facility requirements	**Toilets**		**Handwash sinks**		**Bathtubs or showers**	
	Male	Female	Male	Female	Male	Female
Common facilities, single sex	2 minimum, 1 per 15 occupants	2 minimum, 1 per 15 occupants	2 minimum, 1 per 6 occupants	2 minimum, 1 per 6 occupants	1 per 10 occupants	1 per 10 occupants
Common facilities: Male/female	1 minimum, 1 per 15 occupants	1 minimum, 1 per 15 occupants	1 per 6 occupants	1 per 6 occupants	1 per 10 occupants	1 per 10 occupants
Each family shelter	1, if provided		1		1, if provided	

[Statutory Authority: RCW 49.17.010, 49.17.040, 49.17.050, and 49.17.060. WSR 15-13-092, § 296-307-16115, filed 6/15/15, effective 1/1/16. Statutory Authority: RCW 49.17.010, [49.17].040, and [49.17].050 and 1999 c 374. WSR 00-06-081, § 296-307-16115, filed 3/1/00, effective 3/1/00.]

WAC 296-307-16120 Variance and procedure. (1) Conditions may exist in operations that a state standard will not have practical use. The director of the department of labor and industries may issue a variance from the requirements of the standard when another means of providing equal protection is provided. The substitute means must provide equal protection in accordance with the requirements of chapter 49.17 RCW and chapter 296-900 WAC, Administrative rules.

(2) A temporary variance may be requested under chapter 296-900 WAC, Administrative rules, when an operator cannot comply with new requirements by the effective date(s) of this chapter because:

(a) The construction or alteration to a building cannot be completed in time;

(b) Materials or equipment are not available; or

(c) Professional or technical assistance is not available.

(3) Applications for variances will be reviewed and may be investigated by the department of labor and industries and the department of health. Variances granted will be limited to the specific case or cases covered in the application and may be revoked for cause. The variance must remain prominently posted on the premises while in effect.

(4) Variance application forms may be obtained from the Department of Labor and Industries, P.O. Box 44650, Olympia, Washington 98504-4650 or the Department of Health, P.O. Box 47852, Olympia, Washington 98504-7852, upon request. Requests for variances from safety and health standards shall be made in writing to the director or the assistant director, Department of Labor and Industries, P.O. Box 44650, Olympia, Washington 98504-4650. (Reference RCW 49.17.080 and 49.17.090.)

[Statutory Authority: RCW 49.17.010, 49.17.040, 49.17.050, and 49.17.060. WSR 15-13-092, § 296-307-16120, filed 6/15/15, effective 7/16/15. Statutory Authority: RCW 49.17.010, [49.17].040, and [49.17].050 and 1999 c 374. WSR 00-06-081, § 296-307-16120, filed 3/1/00, effective 3/1/00.]

WAC 296-307-16125 Temporary worker housing sites and cherry harvest campsites. The operator must:

(1) Locate and operate a TWH site to prevent a health or safety hazard that is:

(a) Adequately drained and any drainage from and through the TWH must not endanger any domestic or public water supply;

(b) Free from periodic flooding and depressions in which water may become a nuisance;

(c) At least two hundred feet from a swamp, pool, sink hole, or other surface collection of water unless there is a mosquito prevention program for those areas;

(d) Large enough to prevent overcrowding of necessary structures. The principal housing area for sleeping and for food preparation and eating must be at least five hundred feet from where livestock are kept; and

(e) The grounds and open areas surrounding the shelters must be in a clean and sanitary condition.

(2) Ensure the principal TWH area for sleeping and for food preparation and eating are at least five hundred feet from where livestock are kept or congregate.

(3) Ensure the TWH grounds and open areas surrounding the buildings are kept in a clean and sanitary condition free from refuse.

(4) Ensure all worker-supplied housing is maintained in good working condition.

(5) Restrict the number of occupants in the TWH to the capacity as determined by the department of health.

(6) When closing housing permanently or for the season:

(a) Dispose of all refuse to prevent nuisance; and

(b) Leave the grounds and buildings in a clean and sanitary condition.

[Statutory Authority: RCW 49.17.010, 49.17.040, 49.17.050, and 49.17.060. WSR 15-13-092, § 296-307-16125, filed 6/15/15, effective 7/16/15. Statutory Authority: RCW 49.17.010, [49.17].040, and [49.17].050 and 1999 c 374. WSR 00-06-081, § 296-307-16125, filed 3/1/00, effective 3/1/00.]

WAC 296-307-16127 TWH management plan. (1) The operator licensed under this chapter must develop and implement a written TWH management plan that must include:

(a) A safety plan that includes the following:

(i) Emergency information, including site name and address, emergency contact phone numbers, location of local emergency services, and the department of health bilingual TWH complaint line;

(ii) A plan for contacting a first-aid trained person or emergency services within a reasonable amount of time; and

(iii) Those designated actions operators and occupants must take to ensure occupant safety from fire and other emergencies, including the following:

(A) Emergency escape procedures and emergency escape route assignments;

(B) Procedures to account for all occupants after emergency evacuation has been completed;

(C) The preferred means of reporting fires and other emergencies; and

(D) Names or regular job titles of those who can be contacted for further information or explanation of duties under the plan.

(iv) Training. Designate and train a sufficient number of occupants to assist in the safe and orderly emergency evacuation of occupants; and

(v) Maintenance. Regularly and properly maintain, according to established procedures, equipment and systems installed on heat producing equipment to prevent accidental ignition of combustible materials.

(b) Camp residency rules that describe to the occupants expectations for maintaining a safe and orderly TWH.

(2) The operator shall make available:

(a) A written copy of the TWH management plan, in English and the native language of the occupants, to the department of health or the department of labor and industries upon request; and

(b) A written copy of the rules for review to occupants, in the occupant's native language, by:

(i) Posting it in a central location accessible to the occupants; or

(ii) Providing individual copies to each occupant if requested.

[Statutory Authority: RCW 49.17.010, 49.17.040, 49.17.050, and 49.17.060. WSR 15-13-092, § 296-307-16127, filed 6/15/15, effective 1/1/16.]

WAC 296-307-16130 Water supply. The operator must:

(1) Provide a safe and reliable supply of drinking water from an approved Group A or Group B public water system meeting the requirements of:

(a) WAC 246-358-025 (2)(d), chapters 246-290 and 246-291 WAC; or

(b) Local board of health rules.

(2) Ensure that the distribution lines are able to maintain the working pressure of the water piping system at not less than twenty pounds per square inch after allowing for friction and other pressure losses.

(3) When water is not piped to each dwelling unit, provide cold, potable, running water under pressure within one hundred feet of each dwelling unit.

(4) When water sources are not available in each individual dwelling unit or tent, provide one or more drinking foun-

tains for each one hundred occupants or fraction thereof. The use of common drinking cups or containers from which water is dipped or poured is prohibited.

(5) Provide an adequate supply of hot and cold running water under pressure in bathing, food-handling, and laundry facilities.

(6) Provide an automatically controlled hot water supply of one hundred to one hundred twenty degrees Fahrenheit in bathing, food-handling, and laundry facilities.

(7) When water within one hundred feet of a dwelling unit is unsafe for drinking purposes and accessible to workers, post a sign by each nonpotable water source that:

(a) Reads "Do not drink. Do not use for washing. Do not use for preparing food.";

(b) Is printed in English and in the native language of the workers;

(c) Is printed on material colored to indicate unsafe; and

(d) Is marked with easily understood pictures or symbols.

[Statutory Authority: RCW 49.17.010, 49.17.040, 49.17.050, and 49.17.060. WSR 15-13-092, § 296-307-16130, filed 6/15/15, effective 7/16/15. Statutory Authority: RCW 49.17.010, [49.17].040, and [49.17].050 and 1999 c 374. WSR 00-06-081, § 296-307-16130, filed 3/1/00, effective 3/1/00.]

WAC 296-307-16135 Sewage disposal. The operator must:

(1) Provide sewage disposal systems in accordance with local health jurisdictions.

(2) Connect all drain, waste, and vent systems from buildings to:

(a) Public sewers, if available; or

(b) Approved on-site sewage disposal systems that are designed, constructed, and maintained as required in chapters 246-272A and 173-240 WAC, and local ordinances.

[Statutory Authority: RCW 49.17.010, 49.17.040, 49.17.050, and 49.17.060. WSR 15-13-092, § 296-307-16135, filed 6/15/15, effective 7/16/15. Statutory Authority: RCW 49.17.010, [49.17].040, and [49.17].050 and 1999 c 374. WSR 00-06-081, § 296-307-16135, filed 3/1/00, effective 3/1/00.]

WAC 296-307-16140 Electricity and lighting. The operator must ensure that:

(1) Electricity is supplied to all dwelling units, family shelters, and common facilities, except chemical toilets;

(2) All electrical wiring, fixtures, and electrical equipment must:

(a) Comply with the electric standards of the department of labor and industries regulations, chapters 19.28 RCW, 296-46B WAC, and local ordinances; and

(b) Be maintained in a safe condition.

(3) Each habitable room must have at least:

(a) One ceiling-type light fixture; and

(b) At least one separate floor-type or wall-type convenience outlet.

(4) Laundry, toilet facilities, and bathing facilities have at least one ceiling-type or wall-type light fixture;

(5) General lighting and task lighting within all facilities is adequate to carry on normal daily activities;

(6) Adequate lighting is provided for safe passage for workers to handwashing sinks and toilets. Lighting requirements may be met by natural or artificial means;

(7) For lighting requirements in tents, please see WAC 296-307-16147.

[Statutory Authority: RCW 49.17.010, 49.17.040, 49.17.050, and 49.17.060. WSR 15-13-092, § 296-307-16140, filed 6/15/15, effective 1/1/16. Statutory Authority: RCW 49.17.010, [49.17].040, and [49.17].050 and 1999 c 374. WSR 00-06-081, § 296-307-16140, filed 3/1/00, effective 3/1/00.]

WAC 296-307-16145 Building requirements and maintenance. An operator must:

(1) Construct, if provided TWH dwelling units, including common facilities, which must meet the following requirements:

(a) Protect against the elements;

(b) The State Building Code, chapter 19.27 RCW, or TWH construction standard, chapter 246-359 WAC; and

(c) State and local ordinances, codes, and regulations.

(2) Prevent condensation in dwelling units and common facilities to the degree that it does not contribute to a health risk or safety issue to occupants.

(3) Prevent mold in dwelling units and common facilities.

(4) Provide a locking mechanism on the exterior door(s) of each family shelter. The mechanism must not prevent egress and must be easily opened from the inside without use of a key or special knowledge.

(5) Provide a locking mechanism on all bedroom doors, excluding doors to bedrooms housing more than fifteen occupants. The mechanism must not prevent egress and must be easily opened from the inside without use of a key or special knowledge.

(6) Provide a locking mechanism on:

(a) Each toilet stall door, if provided; and

(b) Each shower stall door, if provided.

(7) Identify each dwelling unit and space used for shelter by posting a number at each site.

(8) Maintain buildings in good repair and sanitary condition.

(9) Comply with all applicable state and federal laws and rules for lead based paint. For more information on lead, go to http://www.lni.wa.gov/Safety/Topics/AtoZ/Lead/Default.asp.

(10) Provide exits that are unobstructed and remain free of any material or matter where its presence would obstruct or render the exit hazardous.

(11) Provide habitable rooms with:

(a) Windows covering a total area equal to at least one-tenth of the total floor space; and

(b) At least one-half of each window can be opened to the outside for ventilation; or

(c) Mechanical ventilation in accordance with applicable standards from the American Society of Heating, Refrigerating, and Air-conditioning Engineers (ASHRAE).

(12) Provide each room used for sleeping purposes with:

(a) At least fifty square feet of floor space for each worker, not including any floor space in any portion of a room less than seven feet from the finished floor to the finished ceiling; and

(b) Windows covering a total area equal to at least one-tenth of the floor space within the surrounding walls of the sleep room.

(13) Provide each room used for sleeping and cooking purposes:

(a) Meet the requirements of subsection (12) of this section;

(b) At least one hundred square feet of floor space per temporary worker; and

(c) For a family shelter constructed or approved for construction under chapter 246-359 WAC before January 1, 2016, one hundred square feet of floor space per temporary worker is required by January 1, 2019. Upon the operator's request, the department of health may grant an extension(s) for up to three additional years. Requests must:

(i) Include a schedule and work plan for achieving compliance;

(ii) Be on a form provided by the department of health; and

(iii) Be submitted to the department of health prior to January 1, 2019.

(14) Ensure wooden floors are at least one foot above ground level or meet the requirements in the State Building Code, chapter 19.27 RCW or Temporary worker housing construction standard, chapter 246-359 WAC.

(15) Provide sixteen-mesh screening on all exterior openings and screen doors with self-closing devices.

(16) Provide and maintain screen doors on all exterior entrances that:

(a) Have self-closing devices; and

(b) Close without gaps that would allow entry of pests.

(17) Install all heating, cooking, and water heating equipment according to state and local ordinances, codes, and regulations and maintain in a safe condition.

(18) Provide habitable rooms with equipment capable of maintaining a temperature of at least seventy degrees Fahrenheit during cold weather.

(19) Ensure that all recreational vehicles and park trailers meet the requirements as defined in this chapter.

[Statutory Authority: RCW 49.17.010, 49.17.040, 49.17.050, and 49.17.060. WSR 15-13-092, § 296-307-16145, filed 6/15/15, effective 1/1/16. Statutory Authority: RCW 49.17.010, [49.17].040, and [49.17].050 and 1999 c 374. WSR 00-06-081, § 296-307-16145, filed 3/1/00, effective 3/1/00.]

WAC 296-307-16147 Tents. (1) Each tent must be constructed to sleep no more than fifteen workers.

(2) Tents must provide protection from the elements, insects, and animals.

(3) Structural stability and floors.

(a) Tents and their supporting framework must be adequately braced and anchored to prevent weather related collapse. Documentation of the structural stability must be furnished to the department of health.

(b) Floors must be smooth, sloped from a raised center towards the lower outer edges. Floors must be without breaks or holes to provide a hard, stable walking surface. Nonridged flooring supported by grass, dirt, soil, gravel, or other uneven surfaces is not acceptable. Floors that are constructed of wood or concrete must comply with the building code, chapter 19.27 RCW and this chapter.

(c) Floor systems must be designed to prevent the entrance of snakes, rodents, and other nuisances.

(4) Flame-retardant treatments.

(a) The sidewalls, drops, and tops of tents shall be composed of flame-resistant material or treated with a flame-retardant in an approved manner.

(b) Floor coverings, which are integral to the tent, and the bunting, shall be composed of flame-resistant material or treated with a flame retardant in an approved manner and in accordance with Uniform Building Code, Standard 31.1.

(c) All tents must have a permanently affixed label bearing the following information:

(i) Identification of tent size and fabric or material type;

(ii) For flame-resistant materials, the necessary information to determine compliance with this section and National Fire Protection Association Standard 701, Standard Methods of Fire Tests for Flame-resistant Textiles and Films;

(iii) For flame-retardant materials, the date that the tent was last treated with an approved flame-retardant;

(iv) The trade name and type of flame-retardant used in the flame-retardant treatment; and

(v) The name of the person and firm that applied the flame-retardant.

(5) Means of egress.

(a) Tents must have a primary entrance door. At least one door must lead to the outside of the tent. The door must not be obstructed in any manner and must remain free of any material or matter where its presence would obstruct or render the exit hazardous.

(b) The area designated for refuge must be accessible and remain clear of storage materials or hazards.

(c) If food-handling facilities are provided in tents, or the tent occupancy capacity is for ten or more workers, a window must be located opposite the door and must have a means to open the window or provide an easily opened space, for example, a zipper which opens downward to the floor, must be provided.

(6) Floor area. The operator must:

(a) If food-handling facilities are provided in the tent, provide an additional twenty square feet of floor space;

(b) Provide at least fifty square feet of floor space for each worker in rooms used for sleeping purposes.

(7) Ceiling height.

(a) A ceiling height of at least seven feet is required in fifty percent of the total floor area.

(b) No portion of the tent measuring less than six feet from the flooring to the ceiling will be included in any computation of the floor area.

(8) Windows and ventilation.

(a) Provide a window area equal to one-tenth of the total floor area in each habitable room which opens at least halfway or more directly to the outside for cross-ventilation and has a minimum of sixteen-mesh screens on all exterior openings.

(b) The windows must have weather-resistant flaps, which will cover the window area and a means of fastening the flaps to provide protection from the elements and allow privacy for the workers.

(9) Electrical and lighting. The operator must ensure that:

(a) Electricity is supplied to all tents used as habitable room.

(b) All electrical wiring, fixtures and electrical equipment must comply with the electrical standards of the depart-

ment of labor and industries regulations, chapter 19.28 RCW, and local ordinances, and be maintained in a safe condition.

(c) Each tent used as a habitable room has at least one ceiling-type light fixture and at least one separate floor-type or wall-type convenience outlet.

(d) If cooking is provided in the tent, appropriate wiring and electrical equipment is provided.

[Statutory Authority: RCW 49.17.010, 49.17.040, 49.17.050, and 49.17.060. WSR 15-13-092, § 296-307-16147, filed 6/15/15, effective 1/1/16.]

WAC 296-307-16149 Carbon monoxide alarms, smoke detectors, and fire extinguishers. (1) An operator must provide and maintain working carbon monoxide alarms that are:

(a) Located in each dwelling unit with a sleeping area; and

(b) Installed in accordance with the manufacturer's recommendations in compliance with the building code, WAC 51-51-0315.

(2) An operator must provide and maintain working smoke detectors that:

(a) Are located in each sleeping area;

(b) Are located on each level of dwelling units with a sleeping area;

(c) Are located in each cooking facility area;

(d) Emits a signal when the batteries are low;

(e) Are placed on the ceiling or wall, but not on the wall above any door; and

(f) Are in compliance with the building code, WAC 51-51-0314.

(3) An operator must provide properly working fire extinguishers in dwelling units where occupants sleep if the dwelling unit does not have a second means of emergency egress. Fire extinguishers must be:

(a) A minimum 2A:10BC;

(b) Installed and maintained according to the manufacturer's instructions; and

(c) Installed in accordance with local ordinances, codes and regulations when applicable.

[Statutory Authority: RCW 49.17.010, 49.17.040, 49.17.050, and 49.17.060. WSR 15-13-092, § 296-307-16149, filed 6/15/15, effective 1/1/16.]

WAC 296-307-16150 Laundry facilities. An operator must:

(1) Provide laundry facilities that include:

(a) One laundry tray or tub or one mechanical washing machine for every thirty occupants;

(b) Adequate facilities for drying clothes; and

(c) Sloped, coved floors of nonslip impervious materials with screened floor drains.

(2) Maintain laundry facilities in a clean and sanitary condition.

[Statutory Authority: RCW 49.17.010, 49.17.040, 49.17.050, and 49.17.060. WSR 15-13-092, § 296-307-16150, filed 6/15/15, effective 7/16/15. Statutory Authority: RCW 49.17.010, [49.17].040, and [49.17].050 and 1999 c 374. WSR 00-06-081, § 296-307-16150, filed 3/1/00, effective 3/1/00.]

WAC 296-307-16155 Handwashing and bathing facilities. An operator must:

(1) Provide handwashing and bathing facilities adequate for the maximum capacity of the TWH according to Table 1 of WAC 296-307-16115.

(2) Meet the following general requirements for all handwashing and bathing facilities:

(a) Provide cleanable, nonabsorbent waste containers;

(b) Provide all showers, baths, or shower rooms with screened floor drains to remove waste water;

(c) Maintain fixtures and drains in good working order;

(d) Separate showers with partitions or walls.

(i) Partitions and walls must ensure privacy and be smooth, cleanable, and nonabsorbent.

(ii) For a bathing facility constructed or approved for construction under chapter 246-359 WAC before January 1, 2016, partitions or walls are required by January 1, 2017.

(e) All showers separated by partitions must ensure privacy.

(3) Meet the following requirements for common facilities:

(a) One handwash sink for every six occupants. Of these handwash sinks, locate adjacent to toilets at least one handwash sink for every fifteen occupants;

(b) One showerhead for every ten occupants;

(c) One "service sink" in each building used for common laundry, handwashing, or bathing;

(d) Sloped, coved floors of nonslip impervious materials with floor drains;

(e) Shower and bathing facilities must provide privacy from the opposite sex and the public;

(f) Maintain common bathing and handwashing facilities in a clean and sanitary condition, cleaned at least daily; and

(g) Bathing and shower facilities must be available at all times during operation of the TWH.

(4) Meet the following requirements for family shelters:

(a) At least one handwash sink per family shelter. If an operator provides a family shelter with toilet facilities, at least one handwash sink located in the toilet room or immediately adjacent to the toilet room; and

(b) Request occupants in family shelters to maintain bathing and handwashing facilities in a clean and sanitary condition.

[Statutory Authority: RCW 49.17.010, 49.17.040, 49.17.050, and 49.17.060. WSR 15-13-092, § 296-307-16155, filed 6/15/15, effective 1/1/16. Statutory Authority: RCW 49.17.010, [49.17].040, and [49.17].050 and 1999 c 374. WSR 00-06-081, § 296-307-16155, filed 3/1/00, effective 3/1/00.]

WAC 296-307-16160 Toilet facilities. The operator must:

(1) Provide toilet facilities adequate for the maximum capacity of the TWH according to Table 1 of WAC 296-307-16115.

(2) Not provide or allow the use of pit privies.

(3) Fill abandoned pit privies with earth.

(4) Meet the following general requirements for all toilet facilities:

(a) Provide flush toilets unless chemical toilets are specifically approved by the department of health according to requirements in chapter 246-272 WAC;

(b) Flush toilets, chemical toilets, and urinals must not be located in any sleeping room, dining room, cooking or food-handling facility or in any tent;

(c) Toilet rooms must be provided with:

(i) Handwashing sinks located in or immediately adjacent to the toilet room;

(ii) Either a window of at least six square feet opening directly to the outside or adequate ventilation;

(iii) Sixteen-mesh screens on all outside openings;

(iv) Fixtures maintained in good working order, including toilet(s) and sink(s); and

(v) Drains maintained in good working order, including floor drains with screens.

(d) When chemical toilets are approved, they must be:

(i) Located at least fifty feet from any dwelling unit or food-handling facility;

(ii) Maintained by a licensed waste disposal company;

(iii) Comply with local ordinances; and

(iv) Located immediately adjacent to a handwash sink(s); and

(e) When urinals are provided:

(i) There must be one urinal or two linear feet of urinal trough for each twenty-five men;

(ii) The floors and the walls surrounding a urinal and extending out at least fifteen inches on all sides must be constructed of materials which will not be adversely affected by moisture; and

(iii) The urinal must have an adequate water flush.

(5) Meet the following requirements for common toilet facilities:

(a) Where common toilet facilities are provided, the number of toilets for each sex must be based on the maximum number of occupants of that sex which the camp is designed to house at any one time, in the ratio of one such toilet for every fifteen occupants, with a minimum of two toilets according to Table 1 of WAC 296-307-16115;

(b) Locate toilet rooms so that:

(i) Toilets are within two hundred feet of the door of each sleeping room; and

(ii) No person has to pass through a sleeping room to reach a toilet room.

(c) Maintain toilets in a clean and sanitary condition, cleaned at least daily;

(d) Provide each toilet compartment with an adequate supply of toilet paper at all times;

(e) Separate toilets by partitions or walls. For the purposes of this section, partitions do not include curtains.

(i) Partitions and walls must ensure privacy, and must have smooth, cleanable, and nonabsorbent surfaces;

(ii) For a common toilet facility constructed or approved for construction under chapter 246-359 WAC before January 1, 2016, partitions or walls are required by January 1, 2017.

(f) Ensure the area surrounding common toilet facilities are adequately lighted; and

(g) When common facilities will be used for both men and women:

(i) Provide separate toilet rooms for each sex with a minimum of one toilet room for each sex and meet the required ratio as defined in (a) of this subsection;

(ii) Identify each room for "men" and "women" with signs printed in English and in the native language of the persons occupying the camp, or identified with easily understood pictures or symbols; and

(iii) Separate facilities by solid walls or partitions extending from the floor to the roof or ceiling when facilities for each sex are located in the same building.

(6) Meet the following requirements for family shelters if common toilet facilities are not provided:

(a) One toilet for each individual family shelter;

(b) Ensure toilet facilities are cleaned prior to occupancy; and

(c) Request occupants to maintain the facilities in a clean and sanitary condition.

[Statutory Authority: RCW 49.17.010, 49.17.040, 49.17.050, and 49.17.060. WSR 15-13-092, § 296-307-16160, filed 6/15/15, effective 1/1/16. Statutory Authority: RCW 49.17.010, [49.17].040, and [49.17].050 and 1999 c 374. WSR 00-06-081, § 296-307-16160, filed 3/1/00, effective 3/1/00.]

WAC 296-307-16165 Cooking and food-handling facilities. The operator must:

(1) Provide sanitary facilities for storing and preparing food;

(2) Provided all food-handling facilities with:

(a) Covered and enclosed or screened cooking and food-handling facilities for all occupants;

(b) Covered and enclosed or screened eating facilities with adequate tables and seating for the occupants;

(c) If provided, hotplates that meet WAC 296-307-16140(2);

(d) A sink with hot and cold running potable water under pressure;

(e) At least two cubic feet of dry food storage space per occupant;

(f) Nonabsorbent, and easily cleanable food preparation surfaces situated off the floor;

(g) Mechanical refrigeration conveniently located and able to maintain a temperature of forty degrees Fahrenheit or below, with at least two cubic feet of storage space per occupant;

(h) Fire-resistant, nonabsorbent, nonasbestos, and easily cleanable wall coverings adjacent to cooking areas;

(i) Nonabsorbent, easily cleanable floors;

(j) Adequate ventilation for cooking facilities; and

(k) Cooking facilities, including fixtures and drains, maintained in good working order.

(3) In common food-handling facilities, the operator must provide:

(a) A room, building, or space within a building adequate in size, separate from any sleeping quarters or tent for workers to prepare and cook their own food;

(b) No direct openings to living or sleeping areas from the common food-handling facility;

(c) An operable cook stove or electric hotplate with four cooking surfaces for every ten workers through any combination of cooking surfaces including burners, one foot in length of burner surface, microwave ovens, stove ovens, or convection ovens.

(4) In family shelter food-handling facilities, the operator shall provide an operable cook stove or electric hotplate with four cooking surfaces for every ten workers through any combination of cooking surfaces including burners, one foot

in length of burner surface, microwave ovens, stove ovens, or convection ovens.

(5) The operator must ensure that common dining hall facilities comply with chapter 246-215 WAC, Food service.

[Statutory Authority: RCW 49.17.010, 49.17.040, 49.17.050, and 49.17.060. WSR 15-13-092, § 296-307-16165, filed 6/15/15, effective 1/1/16. Statutory Authority: RCW 49.17.010, [49.17].040, and [49.17].050 and 1999 c 374. WSR 00-06-081, § 296-307-16165, filed 3/1/00, effective 3/1/00.]

WAC 296-307-16170 Cots, beds, bedding, and personal storage. The operator must:

(1) Provide beds, cots, or bunks in good condition for the maximum occupancy approved by the department of health for operator-supplied housing;

(2) Allow the use of cots in tents for cherry harvest camps only. Cots must be sturdy and stable and without:

(a) Visible mold;

(b) Rips or tears;

(c) Insect infestation;

(d) Stains from bodily fluids; and

(e) Rodents or rodent droppings.

(3) In TWH other than cherry harvest camps, provide beds and bunks with clean mattresses in good repair and without:

(a) Mold;

(b) Rips or tears;

(c) Insect infestation;

(d) Stains from bodily fluids; or

(e) Rodents or rodent droppings.

(4) Maintain bedding, if provided by the operator, in a clean and sanitary condition;

(5) Locate all beds, cots, and bedding at least thirty-six inches from cooking surfaces;

(6) Provide a minimum of twelve inches of clearance between each cot, bed or bunk and the floor;

(7) Allow space to separate beds or cots laterally and end-to-end by at least thirty-six inches when single beds or cots are used;

(8) Meet the following requirements when bunk beds are used:

(a) Allow space to separate beds laterally and end-to-end by at least forty-eight inches;

(b) Maintain a minimum space of twenty-seven inches between the upper and lower bunks; and

(c) Prohibit triple bunks.

(9) Provide all occupants suitable storage space for clothing and personal articles. Storage space must be located in the occupant's room used for sleeping;

(10) Effective January 1, 2017, for each temporary worker housed in a common sleeping facility, provide suitable storage space that must:

(a) Ensure all or a portion of the storage space is enclosed and lockable;

(b) Be anchored in a manner which adequately prevents the storage space from being removed from the building; and

(c) Be accessible to the temporary worker.

[Statutory Authority: RCW 49.17.010, 49.17.040, 49.17.050, and 49.17.060. WSR 15-13-092, § 296-307-16170, filed 6/15/15, effective 1/1/16. Statutory Authority: RCW 49.17.010, [49.17].040, and [49.17].050 and 1999 c 374. WSR 00-06-081, § 296-307-16170, filed 3/1/00, effective 3/1/00.]

WAC 296-307-16175 First aid and safety. The operator must:

(1) Comply with chapters 15.58 and 17.21 RCW and chapters 16-228 and 296-307 WAC, Parts I and J, and pesticide label instructions when using pesticides in and around the TWH;

(2) Prohibit, in the TWH area, the use, storage, or mixing of flammable, volatile, or toxic substances other than those intended for household use;

(3) Provide readily accessible first-aid equipment;

(4) Ensure that a first-aid trained person is readily accessible to administer first aid at all times;

(5) Remove unused refrigerator units or other appliances to prevent access by children.

[Statutory Authority: RCW 49.17.010, 49.17.040, 49.17.050, and 49.17.060. WSR 15-13-092, § 296-307-16175, filed 6/15/15, effective 7/16/15. Statutory Authority: RCW 49.17.010, [49.17].040, and [49.17].050 and 1999 c 374. WSR 00-06-081, § 296-307-16175, filed 3/1/00, effective 3/1/00.]

WAC 296-307-16180 Refuse disposal. The operator must:

(1) Comply with local sanitation codes for removing and disposing of refuse from TWH areas;

(2) Protect against rodent harborage, insect breeding, and other health hazards while storing, collecting, transporting, and disposing of refuse;

(3) Store refuse in fly-tight, rodent-tight, impervious, and cleanable or reusable containers or in single-use containers;

(4) Keep refuse containers clean;

(5) Provide at least one reusable container for each dwelling unit that is:

(a) Located within one hundred feet of each dwelling unit;

(b) Placed on a solid, flat, and level stand made of wood, metal, or concrete; and

(c) Secured to prevent falling over or spilling.

(6) Empty refuse containers at least twice each week, and when full.

[Statutory Authority: RCW 49.17.010, 49.17.040, 49.17.050, and 49.17.060. WSR 15-13-092, § 296-307-16180, filed 6/15/15, effective 1/1/16. Statutory Authority: RCW 49.17.010, [49.17].040, and [49.17].050 and 1999 c 374. WSR 00-06-081, § 296-307-16180, filed 3/1/00, effective 3/1/00.]

WAC 296-307-16185 Insect and rodent control. The operator must take effective measures to prevent and control insect and rodent infestation.

[Statutory Authority: RCW 49.17.010, [49.17].040, and [49.17].050 and 1999 c 374. WSR 00-06-081, § 296-307-16185, filed 3/1/00, effective 3/1/00.]

WAC 296-307-16190 Disease prevention and control. The operator must:

(1) Report immediately to the local health officer the name and address of any individual in the camp known to have or suspected of having a communicable disease;

(2) Report immediately to the local health officer:

(a) Suspected food poisoning;

(b) An unusual prevalence of fever, diarrhea, sore throat, vomiting, or jaundice;

(c) Productive cough; or

(d) When weight loss is a prominent symptom among workers.

(3) Prohibit any individual with a communicable disease from preparing, cooking, serving, or handling food, foodstuffs, or materials in dining halls.

[Statutory Authority: RCW 49.17.010, 49.17.040, 49.17.050, and 49.17.060. WSR 15-13-092, § 296-307-16190, filed 6/15/15, effective 7/16/15. Statutory Authority: RCW 49.17.010, [49.17].040, and [49.17].050 and 1999 c 374. WSR 00-06-081, § 296-307-16190, filed 3/1/00, effective 3/1/00.]

INDOOR OPERATIONS

Part M

Guarding Tools and Equipment;

Farm Shops; Materials Handling

WAC 296-307-18005 How must fan blades be guarded? You must guard the blades of a fan located less than seven feet above the floor or working level. The guard must have maximum openings of one-half inch.

[Statutory Authority: RCW 49.17.040. WSR 98-24-096, § 296-307-18005, filed 12/1/98, effective 3/1/99.]

WAC 296-307-18010 How must constant-running drives be guarded? Shields, guards, and access doors that will prevent accidental contact with rotating machine parts on constant-running drives must be in place when the machine is running.

EXCEPTION: This requirement does not apply to combines when guards could create fire hazards.

"Constant-running drives" means drives that continue to rotate when the engine is running and all clutches are disengaged.

[Statutory Authority: RCW 49.17.040. WSR 98-24-096, § 296-307-18010, filed 12/1/98, effective 3/1/99.]

WAC 296-307-18015 What training must an employer provide for employees who use agricultural equipment? At the time of initial assignment and at least annually thereafter, you must instruct every employee in the safe operation and servicing of all equipment that the employee will use, including at least the following:

(1) Keep all guards in place when the machine is in operation.

(2) Only persons required for instruction or machine operation may ride on equipment, unless a passenger seat or other protective device is provided.

(3) Stop engine, disconnect the power source, and wait for all machine movement to stop before servicing, adjusting, cleaning, or unclogging the equipment.

EXCEPTION: When the machine must be running to be properly serviced or maintained, you must instruct employees in the steps and procedures necessary to safely service or maintain the equipment.

(4) Make sure everyone is clear of machinery before starting the engine, engaging power, or operating the machine.

(5) Lock out electrical power before performing maintenance or service on farmstead equipment.

[Statutory Authority: RCW 49.17.040. WSR 98-24-096, § 296-307-18015, filed 12/1/98, effective 3/1/99.]

WAC 296-307-18020 What requirements apply to machine controls? (1) If machine operation requires the presence of an operator on the machine, a "stop button" must be provided on the machine within reach of the operator.

(2) Power control devices must be marked to indicate the function and machine they control. "On" and "off" must be marked.

(3) "Stop" buttons must be red or orange. Each machine must have one or more stop buttons according to the working position of the operators.

(4) Power control devices must be located or guarded to prevent unexpected or accidental movement of the control. "Start" buttons must be recessed.

[Statutory Authority: RCW 49.17.040. WSR 98-24-096, § 296-307-18020, filed 12/1/98, effective 3/1/99.]

WAC 296-307-18025 How must steam pipes be guarded? (1) All steam pipes or pipes hot enough to burn a person (other than coil pipes, radiators for heating rooms or buildings, or pipes on portable steam engines and boilers) must be guarded with a standard safeguard, unless guarded by location.

(2) All exposed hot pipes within seven feet of the floor or working platform, or within fifteen inches measured horizontally from stairways, ramps, or fixed ladders, must be covered with insulating material or be guarded to prevent contact.

[Statutory Authority: RCW 49.17.040. WSR 98-24-096, § 296-307-18025, filed 12/1/98, effective 3/1/99.]

WAC 296-307-185 Guarding powered saws.

[WSR 97-09-013, recodified as § 296-307-185, filed 4/7/97, effective 4/7/97. Statutory Authority: RCW 49.17.040, [49.17.]050 and [49.17.]060. WSR 96-22-048, § 296-306A-185, filed 10/31/96, effective 12/1/96.]

WAC 296-307-18503 What general requirements apply to powered saws? (1) You must ensure that all cracked saw blades are removed from service, except as indicated in WAC 296-307-18515(6).

(2) Inserting a wedge between a saw disk and its collar to form a "wobble saw" for rabbeting or dadoing is prohibited.

EXCEPTION: This does not apply to properly designed adjustable rabbeting blades.

(3) You must provide and ensure that employees use push sticks or push blocks in sizes and types suitable for the work to be done.

[Statutory Authority: RCW 49.17.040. WSR 98-24-096, § 296-307-18503, filed 12/1/98, effective 3/1/99. WSR 97-09-013, recodified as § 296-307-18503, filed 4/7/97, effective 4/7/97. Statutory Authority: RCW 49.17.040, [49.17.]050 and [49.17.]060. WSR 96-22-048, § 296-306A-18503, filed 10/31/96, effective 12/1/96.]

WAC 296-307-18506 How must band saws be guarded? (1) You must ensure that all band wheels are completely encased or guarded on both sides. Guards must be constructed of at least No. 14 U.S. gauge metal, nominal two-inch wood material, or mesh or perforated metal of at least

U.S. gauge No. 20 with maximum openings of three-eighths inch.

(2) You must ensure that all nonworking portions of the band saw blade are enclosed or guarded. The working side of the blade between the guide and the table may be left open to work on the stock.

(3) You must ensure that the guard for the portion of the blade between the sliding guide and the upper-saw-wheel guard protects the saw blade at the front and outer side.

[Statutory Authority: RCW 49.17.040. WSR 98-24-096, § 296-307-18506, filed 12/1/98, effective 3/1/99. WSR 97-09-013, recodified as § 296-307-18506, filed 4/7/97, effective 4/7/97. Statutory Authority: RCW 49.17.040, [49.17.]050 and [49.17.]060. WSR 96-22-048, § 296-306A-18506, filed 10/31/96, effective 12/1/96.]

WAC 296-307-18509 How must radial arm saws be guarded? (1) You must ensure that the upper hood completely encloses the upper portion of the blade, including the end of the saw arbor. The upper hood must be constructed to protect the operator from flying material, and to deflect sawdust. The sides of the lower exposed portion of the blade must be guarded to the full diameter of the blade by a device that will automatically adjust itself to the thickness of the stock and remain in contact with stock. You may use an alternative lower blade guard if it provides equivalent protection.

(2) You must provide an adjustable stop to prevent the forward travel of the blade beyond the position necessary to complete the cut.

(3) You must equip a radial arm-saw with a mechanism to return the saw and keep it in position at the back of the table or behind the rip fence.

For example: You may use a counter-weight or a saw retractor device, or tilt the front of the radial arm saw unit up enough to maintain the blade at the back of the table or behind the rip fence when the pull handle is released by the operator.

(4) You must ensure that ripping and ploughing are permitted only against the direction in which the saw turns. Mark the direction of the saw rotation on the hood, and attach a permanent warning sign to the rear of the guard that prohibits ripping or ploughing from that position. (Where the blade teeth exit the upper hood when set up for ripping would be the rear of the saw in this case.) Each radial arm saw used for ripping must be provided with antikickback fingers or dogs to prevent the saw from throwing the material or stock back at the operator.

[Statutory Authority: RCW 49.17.040. WSR 98-24-096, § 296-307-18509, filed 12/1/98, effective 3/1/99. WSR 97-09-013, recodified as § 296-307-18509, filed 4/7/97, effective 4/7/97. Statutory Authority: RCW 49.17.040, [49.17.]050 and [49.17.]060. WSR 96-22-048, § 296-306A-18509, filed 10/31/96, effective 12/1/96.]

WAC 296-307-18512 How must table saws be guarded? (1) You must ensure that each circular blade table saw used for ripping or crosscutting is guarded by a standard hood that covers the saw blade above the material completely at all times during the cut. The hood must adjust itself automatically to the thickness of, and must remain in contact with, the material being cut.

EXCEPTION: When finished surfaces of stock may be marred by the guard, it may be raised slightly to avoid contact. The hood must be designed to protect the operator from flying material.

(2) You must ensure that any table saw used for ripping has antikickback fingers or dogs and a spreader.

(3) While used for rabbeting, ploughing, grooving or dadoing a table saw may be used without an antikickback device and a spreader. Upon completion, the antikickback device and spreader must be replaced immediately.

(4) You must ensure that the part of the table saw that is beneath the table is fully guarded to prevent employee contact with the portion of the blade below the table.

(5) Power transmission components of table saws must be guarded according to WAC 296-307-280.

[Statutory Authority: RCW 49.17.040. WSR 98-24-096, § 296-307-18512, filed 12/1/98, effective 3/1/99. WSR 97-09-013, recodified as § 296-307-18512, filed 4/7/97, effective 4/7/97. Statutory Authority: RCW 49.17.040, [49.17.]050 and [49.17.]060. WSR 96-22-048, § 296-306A-18512, filed 10/31/96, effective 12/1/96.]

WAC 296-307-18515 How must circular fuel-wood saws be guarded? (1) You must ensure that fuel-wood saws are guarded by a standard guard that completely encloses the blade to the depth of the teeth, except for the area where material is fed into the blade.

(2) You must ensure that the tables of fuel-wood saws is constructed so that material being sawed is supported on both sides of the blade.

(3) You must provide a mechanism that will prevent the leading edge of the saw from passing the front edge of the table or roll case.

(4) You must provide tilting tables of fuel-wood saws with a backrest for the full length of the table. The backrest must extend upward from the table platform at least to the height of the saw opening. An opening in a backrest must be a maximum of two inches. The backrest frame and filler must be constructed of material strong and rigid enough to prevent distortion under normal use.

(5) Power transmission components of fuel-wood saws must be guarded according to WAC 296-307-280.

(6) When a circular fuel-wood saw blade develops a crack, you must discontinue its use until properly repaired, according to the following measurements.

Length of crack	Diameter of saw in inches
1/2"	12"
1"	24"
1-1/2"	36"

[Statutory Authority: RCW 49.17.040. WSR 98-24-096, § 296-307-18515, filed 12/1/98, effective 3/1/99. WSR 97-09-013, recodified as § 296-307-18515, filed 4/7/97, effective 4/7/97. Statutory Authority: RCW 49.17.040, [49.17.]050 and [49.17.]060. WSR 96-22-048, § 296-306A-18515, filed 10/31/96, effective 12/1/96.]

WAC 296-307-190 Guarding bench grinders, abrasive wheels, and portable grinders.

[Statutory Authority: RCW 49.17.040. WSR 98-24-096, § 296-307-190, filed 12/1/98, effective 3/1/99. WSR 97-09-013, recodified as § 296-307-190, filed 4/7/97, effective 4/7/97. Statutory Authority: RCW 49.17.040,

[49.17.]050 and [49.17.]060. WSR 96-22-048, § 296-306A-190, filed 10/31/96, effective 12/1/96.]

WAC 296-307-19003 What definitions apply to this section? "Abrasive wheel" means a cutting tool consisting of abrasive grains held together by organic or inorganic bonds. This includes diamond and reinforced wheels.

"Flanges" means collars, discs, or plates between which wheels are mounted. Also referred to as adapter, sleeve, or back.

"Mounted wheels" means wheels of various dimensions that are usually 2 inches in diameter or smaller. They can be either organic or inorganic bonded abrasive wheels. They are secured to plain or threaded steel mandrels.

"Off-hand grinding" means grinding material or a part that is held in the operator's hand.

"Portable grinding" means the grinding machine is hand-held and may be easily moved from one location to another.

"Reinforced wheels" means a class of organic wheels that contain strengthening fabric or filament. "Reinforced" does not mean wheels using such mechanical additions as steel rings, steel cup backs, or wire or tape winding.

"Safety guard" means an enclosure designed to restrain the pieces of the grinding wheel and protect the operator in the event that the wheel is broken in operation.

[WSR 97-09-013, recodified as § 296-307-19003, filed 4/7/97, effective 4/7/97. Statutory Authority: RCW 49.17.040, [49.17.]050 and [49.17.]060. WSR 96-22-048, § 296-306A-19003, filed 10/31/96, effective 12/1/96.]

WAC 296-307-19006 What rules apply to guarding abrasive wheels? (1) Abrasive wheels must be used only on machines provided with safety guards.

EXCEPTION: This requirement does not apply to the following:

(a) Wheels used for internal work while the wheel is within the work being ground.

(b) Mounted wheels 2 inches and smaller in diameter, used in portable operations.

(c) Types 16, 17, 18, 18R, and 19 cones, plugs, and threaded hole pot balls where the work offers protection.

(d) Specially shaped "sickle grinding" wheels mounted in mandrel-type bench or floor stands.

(2) The safety guard must cover the spindle end, nut, and flange projections.

EXCEPTIONS: (a) When the work provides protection to the operator, the spindle end, nut, and outer flange may be exposed. When the work entirely covers the side of the wheel, the side covers of the guard may be omitted.

(b) The spindle end, nut, and outer flange may be exposed on portable machines designed for, and used with, type 6, 11, 27, and 28 abrasive wheels, cutting off wheels, and tuck pointing wheels.

(c) The spindle end, nut, and outer flange may be exposed on machines designed as portable saws.

(3) The guard must cover the sides and periphery of the wheel.

EXCEPTIONS: (a) Bench and floor stands;

(i) The maximum permissible angle of exposure is 90°. This exposure must begin at a point not more than 65° above the horizontal plane of the wheel spindle.

(ii) Wherever the nature of the work requires contact with the wheel below the horizontal plane of the spindle, the exposure must not exceed 125°. This exposure must begin at a point not more than 65° above the horizontal plane of the wheel spindle.

(b) Swing-frame grinders may only be exposed on the bottom half; the top half of the wheel must be enclosed at all times.

(c) Where the work is applied to the top of the wheel, the exposure of the grinding wheel periphery must not exceed 60°.

(d) When the work entirely covers the side of the wheel, the side covers of the guard may be omitted.

(4) The safety guard must be mounted to maintain proper alignment with the wheel, and the strength of the fastenings must exceed the strength of the guard.

(5) Take care to see that the safety guard is properly positioned before starting the mounted wheel.

(6) Abrasive wheel machinery guards must meet the design specifications of ANSI B7.1-1970.

(7) Exception: WAC 296-307-19006 does not apply to natural sandstone wheels and metal, wooden, cloth, or paper discs, with a layer of abrasive on the surface.

[Statutory Authority: RCW 49.17.040. WSR 98-24-096, § 296-307-19006, filed 12/1/98, effective 3/1/99. WSR 97-09-013, recodified as § 296-307-19006, filed 4/7/97, effective 4/7/97. Statutory Authority: RCW 49.17.040, [49.17.]050 and [49.17.]060. WSR 96-22-048, § 296-306A-19006, filed 10/31/96, effective 12/1/96.]

WAC 296-307-19009 What are the use, mounting, and guarding rules for abrasive wheels? (1) Immediately before mounting, the operator must closely inspect and sound (ring test) all wheels to make sure they are not damaged. Before mounting the wheel, the operator must check the spindle speed of the machine to be certain that it does not exceed the maximum operating speed marked on the wheel.

"Ring test" means to tap the wheel gently with a light nonmetallic implement, such as the handle of a screwdriver for light wheels, or a wooden mallet for heavier wheels.

(2) Grinding wheels must fit freely on the spindle and remain free under all grinding conditions. The wheel hole must be made suitably oversized to ensure that heat and pressure do not create a hazard.

(3) All contact surfaces of wheels, blotters, and flanges must be flat and free of foreign matter.

(4) Bushings used in the wheel hole must not exceed the width of the wheel and must not contact the flanges.

(5) On offhand grinding machines, work rests must be used to support the work. The work rest must be rigid and adjustable to compensate for wheel wear. Work rests must be kept adjusted closely to the wheel with a maximum opening of one-eighth inch to prevent the work from jamming between the wheel and the rest. The work rest must be securely clamped after each adjustment and shall not be adjusted with the wheel in motion.

(6) Goggles or face shields must be used when grinding.

(7) Nonportable grinding machines must be securely mounted on substantial floors, benches, foundations, or other adequate structures.

(8) After mounting, abrasive wheels must be run at operating speed with the safety guard in place and properly adjusted, or in a protected enclosure for at least one minute

before applying work. During this time, no one may stand in front of or in line with the wheel.

(9) Grinders or abrasive wheels that vibrate or are out of balance must be repaired before use.

(10) Abrasive wheels not designed for the machine or guard must not be mounted on a grinder.

(11) Side grinding must only be performed with wheels designed for this purpose.

Note: Light grinding on the side of straight wheels is permitted only when very delicate pressure is applied.

(12) Where the operator may stand in front of the opening, safety guards must be adjustable to compensate for wheel wear. The distance between the wheel periphery and the adjustable tongue or the guard above the wheel must not exceed one-quarter inch.

[Statutory Authority: RCW 49.17.040. WSR 98-24-096, § 296-307-19009, filed 12/1/98, effective 3/1/99. WSR 97-09-013, recodified as § 296-307-19009, filed 4/7/97, effective 4/7/97. Statutory Authority: RCW 49.17.040, [49.17.]050 and [49.17.]060. WSR 96-22-048, § 296-306A-19009, filed 10/31/96, effective 12/1/96.]

WAC 296-307-19012 What requirements apply to flanges? (1) Grinding machines must have flanges.

(2) All abrasive wheels must be mounted between flanges that are at least one-third the diameter of the wheel. Regardless of flange type used, the wheel must always be guarded. Blotters must be used according to this section.

(3) Design and material requirements include:

(a) Flanges must be designed to transmit the driving torque from the spindle to the grinding wheel.

(b) Flanges must be made of steel, cast iron, or other material of equal or greater strength and rigidity.

(4) An abrasive wheel that is designed to be held by flanges must not be operated without them. Except for those types requiring flanges of a special design, flanges must be at least one-third the diameter of the wheel.

(5) Facings of compressible material (blotters) must be inserted between the abrasive wheel and flanges to ensure uniform distribution of flange pressure.

(6) All flanges must be maintained in good condition. When the bearing surfaces become damaged, they should be trued or refaced. When refacing or truing, exercise care to make sure that proper relief and rigidity is maintained before starting the wheel.

[Statutory Authority: RCW 49.17.040. WSR 98-24-096, § 296-307-19012, filed 12/1/98, effective 3/1/99. WSR 97-09-013, recodified as § 296-307-19012, filed 4/7/97, effective 4/7/97. Statutory Authority: RCW 49.17.040, [49.17.]050 and [49.17.]060. WSR 96-22-048, § 296-306A-19012, filed 10/31/96, effective 12/1/96.]

WAC 296-307-19015 How must vertical portable grinders be guarded? Safety guards on right angle head or vertical portable grinders must have a maximum exposure angle of 180°, and the guard must be between the operator and the wheel during use. The guard must be adjusted so that pieces of an accidentally broken wheel will be deflected away from the operator.

[WSR 97-09-013, recodified as § 296-307-19015, filed 4/7/97, effective 4/7/97. Statutory Authority: RCW 49.17.040, [49.17.]050 and [49.17.]060. WSR 96-22-048, § 296-306A-19015, filed 10/31/96, effective 12/1/96.]

WAC 296-307-19018 How must other portable grinders be guarded? Other portable grinding machines must be guarded so that only the bottom half of the wheel is exposed. The top half of the wheel must be enclosed at all times.

[WSR 97-09-013, recodified as § 296-307-19018, filed 4/7/97, effective 4/7/97. Statutory Authority: RCW 49.17.040, [49.17.]050 and [49.17.]060. WSR 96-22-048, § 296-306A-19018, filed 10/31/96, effective 12/1/96.]

WAC 296-307-195 What rules apply to grounding and "dead man" controls for hand-held portable power tools? (1) Each hand-held, power-driven tool must have a "dead man" control, such as a spring-actuated switch, valve, or equivalent device, so that the power will be automatically shut off whenever the operator releases the control.

(2) The frames and all exposed, noncurrent-carrying metal parts of portable electric machinery, operated at more than fifty volts to ground, must be grounded. Other hand-held portable motors driving electric tools must be grounded if they operate at more than fifty volts to ground. The ground must use a separate ground wire and polarized plug and receptacle.

Exception: Double insulated tools that are designed and used according to the requirements of Article 250-45 of the National Electrical Code (1971 edition) are exempt from the grounding requirements.

[WSR 97-09-013, recodified as § 296-307-195, filed 4/7/97, effective 4/7/97. Statutory Authority: RCW 49.17.040, [49.17.]050 and [49.17.]060. WSR 96-22-048, § 296-306A-195, filed 10/31/96, effective 12/1/96.]

WAC 296-307-200 Compressed air.

[WSR 97-09-013, recodified as § 296-307-200, filed 4/7/97, effective 4/7/97. Statutory Authority: RCW 49.17.040, [49.17.]050 and [49.17.]060. WSR 96-22-048, § 296-306A-200, filed 10/31/96, effective 12/1/96.]

WAC 296-307-20005 May compressed air be used for cleaning? Using compressed air for cleaning purposes is prohibited, except where the pressure is reduced to less than 30 psi and then only with effective chip guarding and personal protective equipment.

[WSR 97-09-013, recodified as § 296-307-20005, filed 4/7/97, effective 4/7/97. Statutory Authority: RCW 49.17.040, [49.17.]050 and [49.17.]060. WSR 96-22-048, § 296-306A-20005, filed 10/31/96, effective 12/1/96.]

WAC 296-307-20010 What requirements apply to compressed air tools? (1) When using compressed air tools, use care to prevent the tool from being shot from the gun.

(2) When momentarily out of use, the gun should be laid so that the tool cannot fly out if the pressure is accidentally released. When not in use, all tools should be removed from the gun.

(3) When disconnecting a compressed air tool from the air line, first shut off the pressure and then operate the tool to release the pressure remaining in the hose.

(4) Compressed air hose or guns must not be pointed at or brought into contact with the body of any person.

[WSR 97-09-013, recodified as § 296-307-20010, filed 4/7/97, effective 4/7/97. Statutory Authority: RCW 49.17.040, [49.17.]050 and [49.17.]060. WSR 96-22-048, § 296-306A-20010, filed 10/31/96, effective 12/1/96.]

WAC 296-307-205 Guarding portable powered tools.

[WSR 97-09-013, recodified as § 296-307-205, filed 4/7/97, effective 4/7/97. Statutory Authority: RCW 49.17.040, [49.17.]050 and [49.17.]060. WSR 96-22-048, § 296-306A-205, filed 10/31/96, effective 12/1/96.]

WAC 296-307-20505 What requirements apply to guarding portable powered tools? (1) All portable, power-driven circular saws with a blade diameter greater than 2 inches must have guards above and below the base plate or shoe.

(a) The upper guard must cover the saw to the depth of the teeth, except for the minimum arc required to permit the base to be tilted for bevel cuts.

(b) The lower guard must cover the saw to the depth of the teeth, except for the minimum arc required to allow proper retraction and contact with the work.

(c) When the tool is withdrawn from the work, the lower guard must automatically and instantly return to covering position.

(2) Portable belt sanding machines must have guards at each nip point where the sanding belt runs onto a pulley. These guards must prevent the hands or fingers of the operator from coming in contact with the nip points. The unused run of the sanding belt must be guarded against accidental contact.

(3) Portable electric powered tools must meet the electrical requirements of chapter 296-307 WAC Part T.

[Statutory Authority: RCW 49.17.040. WSR 98-24-096, § 296-307-20505, filed 12/1/98, effective 3/1/99. WSR 97-09-013, recodified as § 296-307-20505, filed 4/7/97, effective 4/7/97. Statutory Authority: RCW 49.17.040, [49.17.]050 and [49.17.]060. WSR 96-22-048, § 296-306A-20505, filed 10/31/96, effective 12/1/96.]

WAC 296-307-20510 What requirements apply to switches and controls on portable powered tools? (1) The following powered tools must have a constant pressure switch or control that will shut off the power when the pressure is released:

- All hand-held powered circular saws with a blade diameter-greater than 2 inches;
- Electric, hydraulic or pneumatic chain saws; and
- Percussion tools without positive accessory holding means.

All hand-held gasoline powered chain saws must have a constant pressure throttle control that will shut off the power to the saw chain when the pressure is released.

(2) The following powered tools must have a constant pressure switch or control:

- All hand-held powered drills, tappers, fastener drivers, and horizontal, vertical, and angle grinders with wheels greater than 2 inches in diameter;
- Disc sanders with discs greater than 2 inches in diameter;
- Belt sanders;
- Reciprocating saws;
- Saber, scroll, and jig saws with blade shanks greater than a nominal 1/4 inch; and
- Other similarly operating powered tools.

These tools may have a lock-on control if they can be turned off by a single motion of the same finger or fingers that turn it on.

(3) The following powered tools must have either a positive on-off control, or other controls as described above:

- All other hand-held powered tools, including:
- Platen sanders;
- Grinders with wheels 2 inches in diameter or less;
- Disc sanders with discs 2 inches in diameter or less;
- Routers;
- Planers;
- Laminate trimmers;
- Nibblers;
- Shears; and
- Saber, scroll, and jig saws with blade shanks a nominal 1/4 inch wide or less.

(a) Saber, scroll, and jig saws with nonstandard blade holders may use blades with shanks that are nonuniform in width, if the narrowest portion of the blade shank is an integral part in mounting the blade.

(b) Blade shank width must be measured at the narrowest portion of the blade shank when saber, scroll, and jig saws have nonstandard blade holders.

(c) "Nominal" in this section means +0.05 inch.

(4) The operating control on hand-held power tools must be located to minimize the possibility of accidental operation that would constitute a hazard to employees.

Exception: This section does not apply to concrete vibrators, concrete breakers, powered tampers, jack hammers, rock drills, garden appliances, household and kitchen appliances, personal care appliances, or to fixed machinery.

[WSR 97-09-013, recodified as § 296-307-20510, filed 4/7/97, effective 4/7/97. Statutory Authority: RCW 49.17.040, [49.17.]050 and [49.17.]060. WSR 96-22-048, § 296-306A-20510, filed 10/31/96, effective 12/1/96.]

WAC 296-307-20515 What requirements apply to pneumatic powered tools and hose? (1) The operating trigger on portable pneumatic powered tools must be located to minimize the possibility of accidental operation and arranged to close the air inlet valve automatically when the operator removes pressure.

(2) A tool retainer must be installed on each tool that would otherwise be ejected from the hose.

(3) Hose and hose connections used for conducting compressed air to utilization equipment must be designed for the pressure and service to which they are subjected.

[WSR 97-09-013, recodified as § 296-307-20515, filed 4/7/97, effective 4/7/97. Statutory Authority: RCW 49.17.040, [49.17.]050 and [49.17.]060. WSR 96-22-048, § 296-306A-20515, filed 10/31/96, effective 12/1/96.]

WAC 296-307-220 Power lawnmowers.

[WSR 97-09-013, recodified as § 296-307-220, filed 4/7/97, effective 4/7/97. Statutory Authority: RCW 49.17.040, [49.17.]050 and [49.17.]060. WSR 96-22-048, § 296-306A-220, filed 10/31/96, effective 12/1/96.]

WAC 296-307-22003 What definitions apply to this section? "Blade tip circle" means the path described by the outermost point of the blade as it rotates about its shaft axis.

"Catcher assembly" means a part that provides a means for collecting grass clippings or debris.

"Deadman control" means a control designed to automatically interrupt power to a drive when the operator releases the control.

"Guard" means a part for shielding a hazardous area of a machine.

"Lowest blade position" means the lowest blade position when the mower is not in use.

"Operator area" (walk-behind mowers) means a circular area behind the mower that is no smaller than 30 inches in diameter, the center of which is 30 inches behind the nearest blade tip circle.

"Power reel mower" means a lawn-cutting machine with a power source that rotates one or more helically formed blades about a horizontal axis and creates a shearing action with a stationary cutter bar or bed knife.

"Power rotary mower" means a lawn-cutting machine with a power source that rotates one or more cutting blades about a vertical axis.

"Riding mower" means a powered, self-propelled lawn-cutting vehicle on which the operator rides and controls the machine.

"Sulky type mower" means a walk-behind mower that has been converted to a riding mower by the addition of a sulky.

"Walk-behind mower" means a mower either pushed or self-propelled and normally guided by the operator walking behind the unit.

[WSR 97-09-013, recodified as § 296-307-22003, filed 4/7/97, effective 4/7/97. Statutory Authority: RCW 49.17.040, [49.17.]050 and [49.17.]060. WSR 96-22-048, § 296-306A-22003, filed 10/31/96, effective 12/1/96.]

WAC 296-307-22006 What are the general guarding requirements for power lawnmowers? (1) Walk-behind, riding-rotary, and reel power lawnmowers designed for use by employees must meet the design specifications in ANSI B71.1-1968.

Exception: These specifications do not apply to sulky-type mowers, flail mowers, sickle-bar mowers, or mowers designed for commercial use.

(2) All power-driven chains, belts, and gears must be positioned or guarded to prevent accidental contact with the operator during normal starting, mounting, and operation of the machine.

(3) The motor must have a shutoff device that requires manual and intentional reactivation to restart the motor.

(4) All positions of the operating controls must be clearly identified.

(5) The words, "Caution — Be sure the operating control(s) is in neutral before starting the engine," or similar wording must be clearly visible at an engine starting control point on self-propelled mowers.

(6) All power lawn mowers must be used according to the manufacturer's instructions.

[WSR 97-09-013, recodified as § 296-307-22006, filed 4/7/97, effective 4/7/97. Statutory Authority: RCW 49.17.040, [49.17.]050 and [49.17.]060. WSR 96-22-048, § 296-306A-22006, filed 10/31/96, effective 12/1/96.]

WAC 296-307-22009 What rules apply to walk-behind and riding rotary mowers? (1) The mower blade must be enclosed except on the bottom and the enclosure must extend to or below the lowest blade position.

(2) Guards that must be removed to install a catcher assembly must meet the following requirements:

(a) Warning instructions are attached to the mower near the opening stating that the mower must not be used without either the catcher assembly or the guard in place.

(b) The mower is used only with either the catcher assembly or the guard in place.

(c) The catcher assembly is properly and completely installed.

(3) The word "caution" or stronger wording must be placed on the mower at or near each discharge opening.

(4) Blade(s) must stop rotating from the manufacturer's specified maximum speed within 15 seconds after declutching, or shutting off power.

[WSR 97-09-013, recodified as § 296-307-22009, filed 4/7/97, effective 4/7/97. Statutory Authority: RCW 49.17.040, [49.17.]050 and [49.17.]060. WSR 96-22-048, § 296-306A-22009, filed 10/31/96, effective 12/1/96.]

WAC 296-307-22012 What rules apply to walk-behind rotary mowers? (1) The horizontal angle of the grass discharge opening(s) in the blade enclosure must not contact the operator area.

(2) There must be one of the following at all grass discharge openings:

(a) A minimum of 3 inches between the end of the discharge chute and the blade tip circle; or

(b) A rigid bar fastened across the discharge opening, secured to prevent removal without the use of tools. The bottom of the bar must be no higher than the bottom edge of the blade enclosure.

(3) The highest point(s) on the blade enclosure front, except discharge-openings, must be a maximum of 1-1/4 inches above the lowest blade position. Mowers with a swingover handle are considered to have no front in the blade enclosure and therefore must comply with WAC 296-307-22009(1).

(4) The mower handle must be fastened to the mower to prevent loss of control by unintentional uncoupling while in operation.

(5) Mower handles must be locked in the normal operating position(s) so that they cannot be accidentally disengaged during normal mower operation.

(6) A swingover handle must meet the requirements of this section.

(7) Wheel drive disengaging controls, except deadman controls, must move opposite to the direction of the vehicle motion in order to disengage the drive. Deadman controls may operate in any direction to disengage the drive.

(8) You must ensure that each walk-behind rotary mower has a positive constant-pressure device that requires the operator to hold the device in the "on" position to operate the mower. Using rope or string or other material to tie the constant pressure device in the "on" position is prohibited.

[Statutory Authority: RCW 49.17.040. WSR 98-24-096, § 296-307-22012, filed 12/1/98, effective 3/1/99. WSR 97-09-013, recodified as § 296-307-22012, filed 4/7/97, effective 4/7/97. Statutory Authority: RCW 49.17.040, [49.17.]050 and [49.17.]060. WSR 96-22-048, § 296-306A-22012, filed 10/31/96, effective 12/1/96.]

WAC 296-307-22015 What rules apply to riding rotary mowers? (1) The highest point(s) of all openings in the blade enclosure front must be a maximum of 1 1/4 inches above the lowest blade position.

(2) Opening(s) must not allow grass or debris to discharge directly toward the operator seated in normal operator position.

(3) There must be one of the following at all grass discharge openings:

(a) A minimum of 6 inches between the end of the discharge chute and the blade tip circle; or

(b) A rigid bar fastened across the discharge opening secured to prevent removal without the use of tools. The bottom of the bar must be no higher than the bottom edge of the blade enclosure.

(4) Mowers must have stops to prevent jackknifing or locking of the steering mechanism.

(5) The mower must have brakes.

(6) Hand-operated wheel drive disengaging controls must move opposite to the direction of vehicle motion in order to disengage the drive. Foot-operated wheel drive disengaging controls must be depressed to disengage the drive. Deadman controls, both hand and foot operated, may operate in any direction to disengage the drive.

[WSR 97-09-013, recodified as § 296-307-22015, filed 4/7/97, effective 4/7/97. Statutory Authority: RCW 49.17.040, [49.17.]050 and [49.17.]060. WSR 96-22-048, § 296-306A-22015, filed 10/31/96, effective 12/1/96.]

WAC 296-307-225 Jacks.

[WSR 97-09-013, recodified as § 296-307-225, filed 4/7/97, effective 4/7/97. Statutory Authority: RCW 49.17.040, [49.17.]050 and [49.17.]060. WSR 96-22-048, § 296-306A-225, filed 10/31/96, effective 12/1/96.]

WAC 296-307-22503 What definitions apply to this section? "Jack" means an appliance for lifting and lowering or moving horizontally a load using a pushing force.

Note: Jack types include lever and ratchet, screw, and hydraulic.

"Rating" means the maximum working load for which a jack is designed to lift the load safely throughout its travel.

[WSR 97-09-013, recodified as § 296-307-22503, filed 4/7/97, effective 4/7/97. Statutory Authority: RCW 49.17.040, [49.17.]050 and [49.17.]060. WSR 96-22-048, § 296-306A-22503, filed 10/31/96, effective 12/1/96.]

WAC 296-307-22506 How shall the rated load be marked on a jack? (1) The operator must make sure that the jack used has a load rating sufficient to lift and sustain the load.

(2) The rated load must be legibly and permanently marked in a prominent location on the jack by casting, stamping, or other suitable means.

Note: You should follow the manufacturer's specifications to raise the rated load of a jack.

[WSR 97-09-013, recodified as § 296-307-22506, filed 4/7/97, effective 4/7/97. Statutory Authority: RCW 49.17.040, [49.17.]050 and [49.17.]060. WSR 96-22-048, § 296-306A-22506, filed 10/31/96, effective 12/1/96.]

WAC 296-307-22509 What rules apply to the operation and maintenance of jacks? (1) If the foundation is not firm, you must block the base of the jack. If the cap might slip, you must place a block in between the cap and the load.

(2) The operator must watch the stop indicator, which must be kept clean, in order to determine the limit of travel. The indicated limit must not be overrun.

(3) After the load has been raised, it must immediately be cribbed, blocked, or otherwise secured. Working under a load raised only with jacks is prohibited.

(4) Hydraulic jacks exposed to freezing temperatures must be supplied with an adequate antifreeze liquid.

(5) All jacks must be properly lubricated at regular intervals. The lubricating instructions of the manufacturer should be followed, and only lubricants recommended by the manufacturer should be used.

(6) You must ensure that each jack is thoroughly inspected according to the service conditions and at least:

(a) For constant or intermittent use at one locality, once every 6 months;

(b) For jacks sent out of shop for special work, when sent out and when returned;

(c) For a jack subjected to abnormal load or shock, immediately before and immediately thereafter.

(7) Repair or replacement parts must be examined for possible defects.

(8) Jacks that are out of order must be tagged, and not be used until repaired.

[Statutory Authority: RCW 49.17.040. WSR 98-24-096, § 296-307-22509, filed 12/1/98, effective 3/1/99. WSR 97-09-013, recodified as § 296-307-22509, filed 4/7/97, effective 4/7/97. Statutory Authority: RCW 49.17.040, [49.17.]050 and [49.17.]060. WSR 96-22-048, § 296-306A-22509, filed 10/31/96, effective 12/1/96.]

WAC 296-307-230 What are the general requirements for materials handling and storage? (1) Safe clearances of three feet must be allowed for aisles, loading docks, doorways, and wherever turns or passage must be made. Passageways must be kept clear and in good repair, with no obstructions.

(2) Bags, bales, boxes, and other containers stored in tiers must be made secure against sliding or collapse.

(3) Storage areas must be kept free from any accumulation of materials that could cause tripping, fire, or explosion.

(4) Employees must be instructed in proper lifting or moving techniques and methods. Mechanical devices or assistance in lifting must be used when moving heavy objects.

(5) When removing material stored in piles, employees must remove material in a manner that maintains the stability of the pile and prevents collapse.

(6) Storage areas must have proper drainage.

(7) You must provide clearance signs to warn of clearance limits.

(8) For powered industrial truck (forklift) requirements, see WAC 296-307-520.

[Statutory Authority: RCW 49.17.040. WSR 98-24-096, § 296-307-230, filed 12/1/98, effective 3/1/99. WSR 97-09-013, recodified as § 296-307-230, filed 4/7/97, effective 4/7/97. Statutory Authority: RCW 49.17.040, [49.17.]050 and [49.17.]060. WSR 96-22-048, § 296-306A-230, filed 10/31/96, effective 12/1/96.]

WAC 296-307-232 What requirements apply to conveyors? Conveyors must be constructed, operated, and maintained according to ANSI B 20.1-1957.

(1) When the return strand of a conveyor operates within seven feet of the floor, there must also be a trough strong enough to carry the weight resulting from a broken chain.

(2) If the strands are over a passageway, a means must be provided to catch and support the ends of the chain in the event of a break.

(3) When the working strand of a conveyor crosses within three feet of the floor level in passageways, a bridge must be provided for employees to cross over the conveyor.

(4) Whenever conveyors pass adjacent to or over working areas or passageways, protective guards must be installed. These guards must be designed to catch and hold any load or materials that may fall off or dislodge and injure an employee.

(5) Employees must be prohibited from walking on the rolls of roller-type conveyors. If employees must walk on roller-type conveyors because of an emergency, the conveyor must be shut off first.

(6) Guards, screens, or barricades that are strong enough to prevent material from falling must be installed on all sides of the shaftway of elevator-type conveyors except at openings where material is loaded or unloaded. Automatic shaftway gates or suitable barriers must be installed at each floor level where material is loaded or unloaded from the platform.

(7) Conveyors must have an emergency stopping device that can be reached from the conveyor. The device must be located near the material entrance to each chopper, mulcher, saw, or similar equipment. The device must be located so that it can stop the conveyor before an employee enters the point of operation of the machine fed by the conveyor.

EXCEPTION: The emergency stopping device is not required where the conveyor leading into the equipment is under constant control of an operator with full view of the material entrance and the conveyor is located where the operator cannot fall onto it.

(8) Where conveyors are over seven feet high, means must be provided to safely permit essential inspection and maintenance operations.

(9) Any part showing signs of significant wear must be inspected carefully and replaced before it creates a hazard.

(10) Replacement parts must be equal to or exceed the manufacturer's specifications.

[Statutory Authority: RCW 49.17.040. WSR 98-24-096, § 296-307-232, filed 12/1/98, effective 3/1/99. WSR 97-09-013, recodified as § 296-307-232, filed 4/7/97, effective 4/7/97. Statutory Authority: RCW 49.17.040, [49.17.]050 and [49.17.]060. WSR 96-22-048, § 296-306A-232, filed 10/31/96, effective 12/1/96.]

Part N

Sanitation for Indoor Workplaces

WAC 296-307-240 Sanitation for fixed, indoor workplaces.

[WSR 97-09-013, recodified as § 296-307-240, filed 4/7/97, effective 4/7/97. Statutory Authority: RCW 49.17.040, [49.17.]050 and [49.17.]060. WSR 96-22-048, § 296-306A-240, filed 10/31/96, effective 12/1/96.]

WAC 296-307-24001 Must an employer comply with state health regulations? You must comply with the rules and regulations of the state board of health governing sanitation in the workplace. We enforce these regulations according to RCW 43.20.050.

[WSR 97-09-013, recodified as § 296-307-24001, filed 4/7/97, effective 4/7/97. Statutory Authority: RCW 49.17.040, [49.17.]050 and [49.17.]060. WSR 96-22-048, § 296-306A-24001, filed 10/31/96, effective 12/1/96.]

WAC 296-307-24003 What does this section cover? WAC 296-307-240 covers sanitation for employees who normally work in fixed, indoor places of agricultural employment.

A "fixed, indoor workplace" is one where the employees perform a majority of their duties at that site.

This does not cover field employees who only occasionally enter a shop or other farm building as part of their normal duties. Field employees are covered by the field sanitation requirements of WAC 296-307-095.

This section does not cover measures for the control of toxic materials.

[Statutory Authority: RCW 49.17.040. WSR 98-24-096, § 296-307-24003, filed 12/1/98, effective 3/1/99. WSR 97-09-013, recodified as § 296-307-24003, filed 4/7/97, effective 4/7/97. Statutory Authority: RCW 49.17.040, [49.17.]050 and [49.17.]060. WSR 96-22-048, § 296-306A-24003, filed 10/31/96, effective 12/1/96.]

WAC 296-307-24006 What definitions apply to this section? "Lavatory" means a basin used exclusively for washing hands, arms, face, and head.

"Personal service room" means a room used for activities not directly connected with the business function of the employer. Such activities include but are not limited to, first aid, medical services, dressing, showering, toilet use, washing, and eating.

"Potable water" means water that meets state or local quality standards for drinking water, or water that meets the quality standards of the Environmental Protection Agency's "National Interim Primary Drinking Water Regulations," published in 40 C.F.R., Part 141, and 40 C.F.R. 147.2400.

"Toilet facility" means a fixture maintained within a toilet room for the purpose of defecation or urination, or both.

"Toilet room" means a room maintained within or on the premises of any place of employment, containing toilet facilities for employee use.

"Toxic material" means a material that exceeds a regulatory limit (such as in chapter 296-62 WAC), or toxicity that causes or is likely to cause death or serious physical harm.

"Urinal" means a toilet facility maintained within a toilet room for the sole purpose of urination.

"Water closet" means a toilet facility maintained within a toilet room for the purpose of both defecation and urination and which is flushed with water.

"Wet process" means any process or operation in a workroom that normally results in walking or standing surfaces becoming wet.

[WSR 97-09-013, recodified as § 296-307-24006, filed 4/7/97, effective 4/7/97. Statutory Authority: RCW 49.17.040, [49.17.]050 and [49.17.]060. WSR 96-22-048, § 296-306A-24006, filed 10/31/96, effective 12/1/96.]

WAC 296-307-24009 What housekeeping requirements apply to fixed, indoor workplaces? (1) You must ensure that all places of employment are kept clean to the extent that the work allows.

(2) You must ensure that the floor of every workroom is kept as dry as possible. Where wet processes are used, you must maintain drainage. You must provide false floors, platforms, mats, or other dry standing places where practical, or provide appropriate waterproof footgear.

(3) To facilitate cleaning, every floor, working place, and passageway must be kept free from protruding nails, splinters, loose boards and unnecessary holes and openings.

(4) Cleaning and sweeping must be done to minimize dust in the air and when practical, done outside of working hours.

[WSR 97-09-013, recodified as § 296-307-24009, filed 4/7/97, effective 4/7/97. Statutory Authority: RCW 49.17.040, [49.17.]050 and [49.17.]060. WSR 96-22-048, § 296-306A-24009, filed 10/31/96, effective 12/1/96.]

WAC 296-307-24012 How must the potable water supply be maintained? (1) You must provide potable water in all places of employment, for drinking, washing of the person, cooking, washing food, washing cooking or eating utensils, washing food preparation or processing premises, and for personal service rooms.

(2) Potable drinking water dispensers must be maintained in sanitary condition, be closeable, and have a tap.

(3) Open containers for drinking water from which the water must be dipped or poured, even if fitted with a cover, are prohibited.

(4) A common drinking cup and other common utensils are prohibited.

[WSR 97-09-013, recodified as § 296-307-24012, filed 4/7/97, effective 4/7/97. Statutory Authority: RCW 49.17.040, [49.17.]050 and [49.17.]060. WSR 96-22-048, § 296-306A-24012, filed 10/31/96, effective 12/1/96.]

WAC 296-307-24015 How must the nonpotable water supply be maintained? (1) You must ensure that nonpotable water is marked as unsafe and is not used for drinking, washing of the person, cooking, washing food, washing cooking or eating utensils, washing food preparation or processing premises, or personal service rooms, or for washing clothes.

(2) Nonpotable water used for cleaning any other work premises must be free of concentrations of chemicals, fecal coliform, or other substances that could create unsanitary conditions or be harmful to employees.

(3) Nonpotable water systems or systems carrying any other nonpotable substance must be constructed to prevent backflow or backsiphonage into a potable water system.

[WSR 97-09-013, recodified as § 296-307-24015, filed 4/7/97, effective 4/7/97. Statutory Authority: RCW 49.17.040, [49.17.]050 and [49.17.]060. WSR 96-22-048, § 296-306A-24015, filed 10/31/96, effective 12/1/96.]

WAC 296-307-24018 What toilet facilities must an employer provide? (1) You must provide toilet facilities, with separate toilet rooms for each sex, according to the requirements in the table below. You must provide facilities for each sex based on the number of employees of that sex for whom facilities are furnished.

(2) Where single-occupancy rooms have more than one toilet facility, only one facility in each toilet room counts toward these requirements.

In this table, "number of employees" means the maximum number of employees present at any one time on a regular shift.

Number of employees	Minimum number of water closets
1 to 15	1
16 to 35	2
36 to 55	3
56 to 80	4
81 to 110	5
111 to 150	6
Over 150	One additional fixture for each additional 40 employees

(3) Where toilet rooms are occupied by one person at a time, can be locked from the inside, and contain at least one water closet, separate toilet rooms for each sex need not be provided.

(4) Where toilet facilities will not be used by women, urinals may be provided instead of water closets, except that the number of water closets must not be less than 2/3 of the minimum specified.

(5) The sewage disposal method must not endanger the health of employees.

(6) Toilet paper with holder must be provided for every water closet.

(7) Each water closet must occupy a separate compartment with a door and walls or partitions between fixtures high enough to ensure privacy.

[WSR 97-09-013, recodified as § 296-307-24018, filed 4/7/97, effective 4/7/97. Statutory Authority: RCW 49.17.040, [49.17.]050 and [49.17.]060. WSR 96-22-048, § 296-306A-24018, filed 10/31/96, effective 12/1/96.]

WAC 296-307-24021 What washing facilities must an employer provide? You must provide facilities for maintaining personal cleanliness in the workplace. The facilities must be convenient for employees and maintained in a sanitary condition.

[WSR 97-09-013, recodified as § 296-307-24021, filed 4/7/97, effective 4/7/97. Statutory Authority: RCW 49.17.040, [49.17.]050 and [49.17.]060. WSR 96-22-048, § 296-306A-24021, filed 10/31/96, effective 12/1/96.]

WAC 296-307-24024 What requirements apply to lavatories? (1) You must ensure that lavatories are available in all workplaces.

(2) Each lavatory must have hot and cold running water, or tepid running water.

(3) You must provide hand soap or similar cleansing agent.

(4) You must provide individual hand towels, warm air blowers, or clean individual sections of continuous cloth toweling convenient to the lavatories.

[WSR 97-09-013, recodified as § 296-307-24024, filed 4/7/97, effective 4/7/97. Statutory Authority: RCW 49.17.040, [49.17.]050 and [49.17.]060. WSR 96-22-048, § 296-306A-24024, filed 10/31/96, effective 12/1/96.]

WAC 296-307-24027 When must an employer provide change rooms? (1) Whenever employees are required by a WISHA standard to wear protective clothing because of the possibility of contamination with toxic materials, you must provide change rooms with separate storage facilities for street clothes and for the protective clothing.

(2) If you provide work clothes for employees, they must be dry.

[WSR 97-09-013, recodified as § 296-307-24027, filed 4/7/97, effective 4/7/97. Statutory Authority: RCW 49.17.040, [49.17.]050 and [49.17.]060. WSR 96-22-048, § 296-306A-24027, filed 10/31/96, effective 12/1/96.]

WAC 296-307-24030 What requirements apply to consumption of food and beverages in the workplace? (1) This section applies to workplaces where employees may consume food, beverages, or both on the premises.

(2) No employee may consume food or beverages in a toilet room nor in any area exposed to a toxic material.

(3) If your workplace exposes employees to injurious dusts or other toxic materials, you must provide a separate lunchroom unless it is convenient for employees to lunch away from the premises. The size of the lunchroom must be based on the maximum number of persons using the room at one time, according to the following table.

Number of persons	Square feet per person
25 and less	13
26 - 74	12
75 - 149	11
150 and over	10

(4) You must provide receptacles of smooth, corrosion resistant, easily cleanable, or disposable materials for the disposal of waste food. You must provide enough receptacles to encourage their use and to prevent overfilling. Receptacles must be emptied at least once a working day and maintained in sanitary condition. Receptacles must have a solid tight-fitting cover unless sanitary condition can be maintained without a cover.

(5) No food or beverages may be stored in toilet rooms or in an area exposed to toxic material.

(6) All employee food service facilities and operations must follow sound hygienic principles. If all or part of the food service is provided, the food dispensed must be wholesome and free from spoilage. Food must be processed, prepared, handled, and stored so as to prevent contamination.

[WSR 97-09-013, recodified as § 296-307-24030, filed 4/7/97, effective 4/7/97. Statutory Authority: RCW 49.17.040, [49.17.]050 and [49.17.]060. WSR 96-22-048, § 296-306A-24030, filed 10/31/96, effective 12/1/96.]

WAC 296-307-24033 How must waste be stored and removed? (1) You must ensure that any receptacle used for waste or garbage that may rot is constructed so that it does not leak and can be thoroughly cleaned and maintained in a sanitary condition. A receptacle must have a solid tight-fitting cover, unless it can be maintained in a sanitary condition without a cover. Receptacles designed to maintain sanitary condition may be used in place of this requirement.

(2) All sweepings, solid or liquid wastes, refuse, and garbage must be removed to avoid creating a health menace, and as often as necessary to maintain the workplace in a sanitary condition.

[WSR 97-09-013, recodified as § 296-307-24033, filed 4/7/97, effective 4/7/97. Statutory Authority: RCW 49.17.040, [49.17.]050 and [49.17.]060. WSR 96-22-048, § 296-306A-24033, filed 10/31/96, effective 12/1/96.]

WAC 296-307-24036 When must an employer have a vermin control program? Every building with personal service, food preparation, or eating rooms must be constructed, equipped, and maintained to restrict infestation by rodents, insects, and other vermin. You must have a continuing and effective extermination program where vermin are present.

[WSR 97-09-013, recodified as § 296-307-24036, filed 4/7/97, effective 4/7/97. Statutory Authority: RCW 49.17.040, [49.17.]050 and [49.17.]060. WSR 96-22-048, § 296-306A-24036, filed 10/31/96, effective 12/1/96.]

Part O

Walking Working Surfaces; Fixed Industrial Stairs; Aerial Manlifts

WAC 296-307-250 Walking working surfaces, elevated walkways, and platforms.

[WSR 97-09-013, recodified as § 296-307-250, filed 4/7/97, effective 4/7/97. Statutory Authority: RCW 49.17.040, [49.17.]050 and [49.17.]060. WSR 96-22-048, § 296-306A-250, filed 10/31/96, effective 12/1/96.]

WAC 296-307-25003 What definitions apply to this section? "Floor hole" means an opening with the smallest dimension between one and 12 inches, in any floor, platform, pavement, or yard, through which materials may fall but not people. Examples are a belt hole, pipe opening, or slot opening.

"Floor opening" means an opening with the smallest dimension of 12 inches or more, in any floor, platform, pavement, or yard, through which people may fall. Examples are a hatchway, stair or ladder opening, pit, or large manhole. Floor openings occupied by elevators, dumb waiters, conveyors, machinery, or containers are excluded from this definition.

"Handrail" means a single bar or pipe supported on brackets from a wall or partition to furnish persons with a handhold in case of tripping.

"Platform" means a working space for people that is elevated above the surrounding floor or ground, such as a balcony or platform for the operation of machinery and equipment.

"Runway" means a passageway used by people that is elevated above the surrounding floor or ground level, such as a footwalk along shafting or a walkway between buildings.

"Standard railing" means a vertical barrier along exposed edges of a floor opening, wall opening, ramp, platform, or runway to prevent people from falling.

"Standard strength and construction" means any construction of railings, covers, or other guards that meets the requirements of this section.

"Stair railing" means a vertical barrier along exposed sides of a stairway to prevent people from falling.

"Toeboard" means a vertical barrier at floor level along exposed edges of a floor opening, wall opening, platform, runway, or ramp to prevent materials from falling.

"Wall hole" means an opening between one and 30 inches high, of any width, in any wall or partition, such as a ventilation hole or drainage scupper.

"Wall opening" means an opening at least 30 inches high and 18 inches wide, in any wall or partition, through which

people may fall, such as a yard-arm doorway or chute opening.

[WSR 97-09-013, recodified as § 296-307-25003, filed 4/7/97, effective 4/7/97. Statutory Authority: RCW 49.17.040, [49.17.]050 and [49.17.]060. WSR 96-22-048, § 296-306A-25003, filed 10/31/96, effective 12/1/96.]

WAC 296-307-25006 When may railings be omitted? Railings may be omitted from sections of open-sided floors, platforms, or walkways where guard rails impair operations, if railings are replaced when they no longer impair operations.

[WSR 97-09-013, recodified as § 296-307-25006, filed 4/7/97, effective 4/7/97. Statutory Authority: RCW 49.17.040, [49.17.]050 and [49.17.]060. WSR 96-22-048, § 296-306A-25006, filed 10/31/96, effective 12/1/96.]

WAC 296-307-25009 What protection must an employer provide for floor openings? (1) Every stairway floor opening must be guarded by a standard railing constructed according to this section. The railing must guard all exposed sides (except the entrance to the stairway). Infrequently used stairways where traffic across the opening prevents using a fixed standard railing (as when located in aisle spaces, etc.), may use an alternate guarding method. In these cases, the guard must have a hinged floor opening cover of standard strength and construction and removable standard railings on all exposed sides (except at the entrance to the stairway).

(2) Every ladderway floor opening or platform must be guarded by a standard railing with standard toeboard on all exposed sides (except at the entrance to the opening). The passage through the railing must have either a swinging gate or offset so that a person cannot walk directly into the opening.

(3) Every hatchway and chute floor opening must be guarded by one of the following:

(a) A hinged floor opening cover of standard strength and construction with standard railings, or a permanent cover with only one side exposed. When the opening is not in use, the cover must be closed or the exposed side must be guarded at both the top and middle by removable standard railings.

(b) A removable railing with toeboard on a maximum of two sides of the opening and with fixed standard railings and toeboards on all other exposed sides. The removable railings must be kept in place when the opening is not in use and should be hinged or mounted to be easily replaced.

(4) When employees must feed material into any hatchway or chute opening, you must provide protection to prevent people from falling through the opening.

(5) When practical, the area under floor openings must be fenced off. Otherwise, the area must be plainly marked with yellow lines and telltales hanging within 5-1/2 feet of the ground or floor level.

(6) Where floor openings are used to drop materials from one level to another, audible warning systems must be installed and used to indicate to employees on the lower level when material is dropped.

(7) Every skylight opening and hole must be guarded by a standard skylight screen or a fixed standard railing on all exposed sides.

(8) Every infrequently used pit and trapdoor floor opening must be guarded by a floor opening cover of standard strength and construction that should be hinged in place. When the cover is not in place, the pit or trap opening must be constantly attended or protected on all exposed sides by removable standard railings.

(9) Every manhole floor opening must be guarded by a standard manhole cover. The manhole cover may be left unhinged. When the cover is removed, the manhole opening must be constantly attended or protected by removable standard railings.

(10) Every temporary floor opening must have standard railings or must be constantly attended.

(11) Every floor hole that people can accidentally walk into must be guarded by either:

(a) A standard railing with standard toeboard on all exposed sides; or

(b) A floor hole cover of standard strength and construction that should be hinged in place. While the cover is not in place, the floor hole must be constantly attended or protected by a removable standard railing.

(12) Every floor hole surrounded by fixed machinery, equipment, or walls that prevent people from walking into it, must be protected by a cover that leaves openings a maximum of one inch wide. The cover must be securely held in place to prevent tools or materials from falling through.

(13) Where doors or gates open directly on a stairway, a platform must be provided so that the swing of the door does not reduce the platform width to less than 20 inches.

[WSR 97-09-013, recodified as § 296-307-25009, filed 4/7/97, effective 4/7/97. Statutory Authority: RCW 49.17.040, [49.17.]050 and [49.17.]060. WSR 96-22-048, § 296-306A-25009, filed 10/31/96, effective 12/1/96.]

WAC 296-307-25012 What protection must an employer provide for wall openings and holes? (1) Every wall opening from which there is a drop of more than 4 feet must be guarded by one of the following:

(a) A rail, roller, picket fence, half door, or equivalent barrier.

The guard may be removable but should be hinged or mounted so it can be easily replaced. When employees working below the opening are exposed to falling materials, a removable toeboard or the equivalent must also be provided. When the opening is unused, the guard must be kept in position even with a door on the opening. In addition, a grab handle must be provided on each side of the opening with its center approximately 4 feet above floor level and of standard strength and mounting.

(b) An extension platform onto which materials can be hoisted for handling, and that has side rails or equivalent guards of standard specifications.

(2) Every chute wall opening from which there is a drop of more than 4 feet must be guarded according to subsection (1) of this section or as required by the conditions.

(3) Every window wall opening at a stairway landing, floor, platform, or balcony, from which there is a drop of more than 4 feet, and where the bottom of the opening is less than 3 feet above the platform or landing, must be guarded by standard slats, standard grillwork according to WAC 296-307-25042(3), or a standard railing.

Where the window opening is below the landing, or platform, a standard toeboard must be provided.

(4) Every temporary wall opening must have adequate guards that may be of less than standard construction.

(5) Where there is a hazard of materials falling through a wall hole, and the lower edge of the near side of the hole is less than 4 inches above the floor, and the far side of the hole is more than 5 feet above the next lower level, the hole must be protected by a standard toeboard or a solid enclosing screen, or according to WAC 296-307-25042(3).

[Statutory Authority: RCW 49.17.040. WSR 98-24-096, § 296-307-25012, filed 12/1/98, effective 3/1/99. WSR 97-09-013, recodified as § 296-307-25012, filed 4/7/97, effective 4/7/97. Statutory Authority: RCW 49.17.040, [49.17.]050 and [49.17.]060. WSR 96-22-048, § 296-306A-25012, filed 10/31/96, effective 12/1/96.]

WAC 296-307-25015 What protection must an employer provide for open-sided floors, platforms, and runways? (1) Every open-sided floor or platform 4 feet or more above an adjacent floor or ground level must be guarded by a standard railing (or the equivalent according to WAC 296-307-25027) on all open sides, except where there is an entrance to a ramp, stairway, or fixed ladder. The railing must have a toeboard wherever, beneath the open sides:

(a) A person can pass; or

(b) There is moving machinery; or

(c) Materials falling onto equipment would create a hazard.

(2) Every runway must be guarded by a standard railing (or the equivalent according to WAC 296-307-25027) on all open sides that are 4 feet or more above floor or ground level. Wherever tools, machine parts, or materials are likely to be used on the runway, a toeboard must also be provided on each exposed side.

Runways used exclusively for special purposes (such as oiling, shafting, or filling tank cars) may have the railing on one side omitted when operating conditions require, if the hazard is minimized by using a runway at least 18 inches wide. Where people entering runways become exposed to machinery, electrical equipment, or hazards other than from falling, additional guarding may be necessary.

(3) Regardless of height, all open-sided floors, walkways, platforms, or runways above or adjacent to dangerous equipment, pickling or galvanizing tanks, degreasing units, or similar hazardous equipment, must be guarded with a standard railing and toeboard.

(4) Tools and loose materials must not be left on overhead platforms and scaffolds.

[Statutory Authority: RCW 49.17.040. WSR 98-24-096, § 296-307-25015, filed 12/1/98, effective 3/1/99. WSR 97-09-013, recodified as § 296-307-25015, filed 4/7/97, effective 4/7/97. Statutory Authority: RCW 49.17.040, [49.17.]050 and [49.17.]060. WSR 96-22-048, § 296-306A-25015, filed 10/31/96, effective 12/1/96.]

WAC 296-307-25018 What requirements apply to stairway railings and guards? (1) Every flight of stairs having four or more risers must have standard stair railings or standard handrails as follows (stairway widths measured clear of all obstructions except handrails):

(a) Stairways less than 44 inches wide with both sides enclosed must have at least one handrail, preferably on the right side descending.

(b) Stairways less than 44 inches wide with one side open must have at least one stair railing on the open side.

(c) Stairways less than 44 inches wide with both sides open must have one stair railing on each side.

(d) Stairways more than 44 inches wide but less than 88 inches wide must have one handrail on each enclosed side and one stair railing on each open side.

(e) Stairways 88 or more inches wide must have one handrail on each enclosed side, one stair railing on each open side, and one intermediate stair railing at the approximate middle.

Exception: Vehicle service pit stairways are exempt from this requirement if hand or stair rails would prevent vehicle movement into position over the pit.

(2) Winding stairs must have a handrail that prevents walking on all portions of the treads that are less than 6 inches wide.

(3) Nonindustrial and "monumental" steps are exempt from the requirements of this section. However, public and private building steps at loading or receiving docks, in maintenance areas, etc., and stairs used exclusively by employees, must meet the requirements of this section.

[WSR 97-09-013, recodified as § 296-307-25018, filed 4/7/97, effective 4/7/97. Statutory Authority: RCW 49.17.040, [49.17.]050 and [49.17.]060. WSR 96-22-048, § 296-306A-25018, filed 10/31/96, effective 12/1/96.]

WAC 296-307-25021 How must a standard railing be constructed? A standard railing must meet the following requirements:

(1) The railing has a top rail, intermediate rail, and posts.

(2) The railing height is between thirty-six and forty-two inches nominal from the upper surface of the top rail to the floor, platform, runway, or ramp level.

(3) The top rail is smooth.

(4) The intermediate rail is approximately halfway between the top rail and the floor, platform, runway, or ramp.

(5) The ends of the rails do not overhang the terminal posts except where the overhang does not create a hazard.

(6) Guardrails taller than 42 inches are constructed so they do not create a hazard. Additional mid-rails are installed so that openings beneath the top rail prevent a spherical object with a 19-inch or larger diameter from falling through.

[WSR 97-09-013, recodified as § 296-307-25021, filed 4/7/97, effective 4/7/97. Statutory Authority: RCW 49.17.040, [49.17.]050 and [49.17.]060. WSR 96-22-048, § 296-306A-25021, filed 10/31/96, effective 12/1/96.]

WAC 296-307-25024 How must a stair railing be constructed? A stair railing must be constructed similar to a standard railing. The stair railing must be between 34 and 30 inches tall measured from the top of the top rail to the tread surface meeting the face of the riser at the forward edge of the tread.

[WSR 97-09-013, recodified as § 296-307-25024, filed 4/7/97, effective 4/7/97. Statutory Authority: RCW 49.17.040, [49.17.]050 and [49.17.]060. WSR 96-22-048, § 296-306A-25024, filed 10/31/96, effective 12/1/96.]

WAC 296-307-25027 What are the requirements for railing dimensions? Standard railings must meet the following requirements:

(1) For wood railings:

(a) The posts are of at least two inch by four inch nominal stock spaced six feet apart or less; and

(b) The top and intermediate rails are of at least two inch by four inch nominal stock.

(c) If the top rail is made of two right-angle pieces of 1-inch by 4-inch stock, posts are spaced on 8-foot centers, with 2-inch by 4-inch intermediate rail.

(2) For pipe railings:

(a) The posts and top and intermediate railings are at least 1-1/2 inches nominal diameter (outside diameter); and

(b) The posts are spaced on centers of eight feet or less.

(3) For structural steel railings:

(a) The posts and top and intermediate rails are of 2-inch by 2-inch by 3/8-inch angles or other metal shapes of equivalent bending strength; and

(b) The posts are spaced on centers of eight feet or less.

(4) Post anchors and framing parts for all railings are constructed so that the completed structure can withstand a load of at least two hundred pounds applied in any direction at any point on the top rail.

(5) Other types, sizes, and arrangements of railing construction that meet the following requirements are acceptable:

(a) The top rail is smooth;

(b) The top rail is between thirty-six and forty-two inches nominal above the floor, platform, runway, or ramp level;

(c) The railing is strong enough to withstand two hundred pounds of pressure on the top rail;

(d) The railing provides protection between the top rail and the floor, platform, runway, ramp, or stair treads, equivalent to that of a standard intermediate rail;

(e) There are no overhanging rail ends unless the overhang does not create a hazard; such as baluster railings, scrollwork railings, or paneled railings.

Note: The dimensions specified are based on the U.S. Department of Agriculture Wood Handbook, No. 72, 1955 (No. 1 (S4S) Southern Yellow Pine (Modulus of Rupture 7,400 psi)) for wood; ANSI G 41.5-1970, American National Standard Specifications for Structural Steel, for structural steel; and ANSI B 125.1-1970, American National Standard Specifications for Welded and Steamless Steel Pipe, for pipe.

[WSR 97-09-013, recodified as § 296-307-25027, filed 4/7/97, effective 4/7/97. Statutory Authority: RCW 49.17.040, [49.17.]050 and [49.17.]060. WSR 96-22-048, § 296-306A-25027, filed 10/31/96, effective 12/1/96.]

WAC 296-307-25030 What requirements apply to toeboards? (1) Standard toeboard height is at least four inches nominal from its top edge to the level of the floor, platform, runway, or ramp. The toeboard must be securely fastened in place and with a maximum of 1/4 inch clearance above floor level. It must be made of any substantial material that is either solid or with openings that are a maximum of one inch in diameter.

(2) Where material is piled high enough that a standard toeboard does not provide protection, paneling from the floor to the intermediate rail, or to the top rail, must be provided.

[WSR 97-09-013, recodified as § 296-307-25030, filed 4/7/97, effective 4/7/97. Statutory Authority: RCW 49.17.040, [49.17.]050 and [49.17.]060. WSR 96-22-048, § 296-306A-25030, filed 10/31/96, effective 12/1/96.]

WAC 296-307-25033 How must handrails and railings be constructed? (1) A handrail must have a horizontal part mounted directly on a wall or partition by brackets attached to the lower side of the handrail. The brackets must be attached to ensure that there is a smooth surface along the top and both sides of the handrail. The handrail must be rounded or otherwise provide an adequate handhold for anyone grasping it to avoid falling. The ends of the handrail should be turned in to the supporting wall or arranged to prevent a projection hazard.

(2) Handrails must be a maximum of thirty-four inches high and at least thirty inches from the upper surface of the handrail to the surface of the tread in line with the face of the riser or to the surface of the ramp.

(3) The size of handrails must be:

(a) For hardwood, at least two inches in diameter.

(b) For metal pipe, at least 1-1/2 inches in diameter.

(4) Brackets must be spaced a maximum of eight feet apart.

(5) Handrail mounting must be strong enough to withstand a load of at least two hundred pounds applied in any direction at any point on the rail.

(6) All handrails and railings shall have a clearance of at least 1-1/2 inches between the handrail or railing and the wall or any other object.

[WSR 97-09-013, recodified as § 296-307-25033, filed 4/7/97, effective 4/7/97. Statutory Authority: RCW 49.17.040, [49.17.]050 and [49.17.]060. WSR 96-22-048, § 296-306A-25033, filed 10/31/96, effective 12/1/96.]

WAC 296-307-25036 What materials may be used for floor opening covers? Floor opening covers must be made of any material that meets the following strength requirements:

(1) Trench or conduit covers and their supports, when located in plant roadways, must be designed to carry a truck rear-axle load of at least 20,000 pounds.

(2) Manhole covers and their supports, when located in plant roadways, must meet local standard highway requirements if any; otherwise, they must be designed to carry a truck rear-axle of at least 20,000 pounds.

(3) Other floor opening covers must be made of any material that can carry a truck rear-axle load of at least 20,000 pounds. Covers may project a maximum of one inch above the floor level if all edges are chamfered to a maximum angle with the horizontal of thirty degrees. All hinges, handles, bolts, or other parts must set flush with the floor or cover surface.

[WSR 97-09-013, recodified as § 296-307-25036, filed 4/7/97, effective 4/7/97. Statutory Authority: RCW 49.17.040, [49.17.]050 and [49.17.]060. WSR 96-22-048, § 296-306A-25036, filed 10/31/96, effective 12/1/96.]

WAC 296-307-25039 How must skylight screens be constructed and mounted? Skylight screens must be constructed and mounted to withstand a load of at least two hundred pounds applied perpendicularly anywhere on the screen. Skylight screen must be constructed and mounted so that, under ordinary loads or impacts, they will not deflect downward enough to break the glass below them. They must be constructed of grillwork with openings a maximum of four inches long or of slatwork with openings a maximum of two inches wide and any length.

[WSR 97-09-013, recodified as § 296-307-25039, filed 4/7/97, effective 4/7/97. Statutory Authority: RCW 49.17.040, [49.17.]050 and [49.17.]060. WSR 96-22-048, § 296-306A-25039, filed 10/31/96, effective 12/1/96.]

WAC 296-307-25042 What protection must an employer provide for wall openings? (1) Wall opening barriers (rails, rollers, picket fences, and half doors) must be constructed and mounted, to withstand a load of at least two hundred pounds applied in any direction (except upward) at any point on the top rail.

(2) Wall opening grab handles must be at least twelve inches long and must be mounted to give 1-1/2 inches clearance from the side framing of the wall opening. The size, material, and anchoring of the grab handle must form a structure that can withstand a load of at least two hundred pounds applied in any direction at any point of the handle.

(3) Wall opening screens must be constructed and mounted to withstand a load of at least two hundred pounds applied horizontally anywhere on the near side of the screen. They must be of solid construction, of grillwork with openings a maximum of four inches long, or of slatwork with openings a maximum of two inches wide and any length.

[WSR 97-09-013, recodified as § 296-307-25042, filed 4/7/97, effective 4/7/97. Statutory Authority: RCW 49.17.040, [49.17.]050 and [49.17.]060. WSR 96-22-048, § 296-306A-25042, filed 10/31/96, effective 12/1/96.]

WAC 296-307-260 Fixed industrial stairs.

[WSR 97-09-013, recodified as § 296-307-260, filed 4/7/97, effective 4/7/97. Statutory Authority: RCW 49.17.040, [49.17.]050 and [49.17.]060. WSR 96-22-048, § 296-306A-260, filed 10/31/96, effective 12/1/96.]

WAC 296-307-26003 What does this section cover? WAC 296-307-260 covers the safe design and construction of fixed general industrial stairs. Fixed general industrial stairs includes interior and exterior stairs around machinery, tanks, and other equipment, and stairs leading to or from floors, platforms, or pits.

This section does not apply to stairs used for fire exits, to construction operations, to private buildings or residences, or to articulated stairs that are installed on floating roof tanks or on dock facilities, where the angle changes with the rise and fall of the base support.

Stairs of public and private buildings at loading or receiving docks, in maintenance areas, etc., or stairs that are used exclusively by employees, are considered "fixed industrial steps" and must meet these requirements.

[Statutory Authority: RCW 49.17.040. WSR 98-24-096, § 296-307-26003, filed 12/1/98, effective 3/1/99. WSR 97-09-013, recodified as § 296-307-26003, filed 4/7/97, effective 4/7/97. Statutory Authority: RCW 49.17.040, [49.17.]050 and [49.17.]060. WSR 96-22-048, § 296-306A-26003, filed 10/31/96, effective 12/1/96.]

WAC 296-307-26006 What definitions apply to this section? "Nose or nosing" means the part of a tread projecting beyond the face of the riser immediately below.

"Open riser" means the air space between the treads of stairways without risers.

"Platform" means an extended step or landing breaking a continuous run of stairs.

"Railing" means a vertical barrier erected along exposed sides of stairways and platforms to prevent people from falling. The top part of the railing usually serves as a handrail.

"Rise" means the vertical distance from the top of a tread to the top of the next higher tread.

"Riser" means the upright part of a step at the back of a lower tread and near the leading edge of the next higher tread.

"Stairs or stairway" means a series of steps. A series of steps and landings having three or more risers constitutes stairs or a stairway.

"Tread" means the horizontal part of a step.

"Tread run" means the horizontal distance from the leading edge of a tread to the leading edge of an adjacent tread.

"Tread width" means the horizontal distance from front to back of tread, including nosing.

[WSR 97-09-013, recodified as § 296-307-26006, filed 4/7/97, effective 4/7/97. Statutory Authority: RCW 49.17.040, [49.17.]050 and [49.17.]060. WSR 96-22-048, § 296-306A-26006, filed 10/31/96, effective 12/1/96.]

WAC 296-307-26009 Where are fixed stairs required? Fixed stairs must be provided for:

(1) Employee access from one structure level to another where operations require regular travel between levels.

(2) Employee access to operating platforms on any equipment that requires regular attention during operations.

(3) Employees that need daily access to elevations, or access at each shift, for purposes such as gauging, inspection, regular maintenance, etc., where:

(a) The work may expose employees to acids, caustics, gases, or other harmful substances; or

(b) Employees must normally carry tools or equipment by hand.

Note: This section does not prohibit the use of fixed ladders for access to elevated tanks, towers, and similar structures, overhead traveling cranes, etc., where the use of fixed ladders is common practice.

[WSR 97-09-013, recodified as § 296-307-26009, filed 4/7/97, effective 4/7/97. Statutory Authority: RCW 49.17.040, [49.17.]050 and [49.17.]060. WSR 96-22-048, § 296-306A-26009, filed 10/31/96, effective 12/1/96.]

WAC 296-307-26012 Where are spiral stairs prohibited? Spiral stairways are prohibited except for special limited use and secondary access when a conventional stairway is not practical. Winding stairways may be installed on tanks and similar round structures where the diameter of the structure is a minimum of five feet.

[WSR 97-09-013, recodified as § 296-307-26012, filed 4/7/97, effective 4/7/97. Statutory Authority: RCW 49.17.040, [49.17.]050 and [49.17.]060. WSR 96-22-048, § 296-306A-26012, filed 10/31/96, effective 12/1/96.]

WAC 296-307-26015 How strong must fixed stairs be? Fixed stairways must be designed and constructed to carry a load of five times the normal live load anticipated, and must be at least strong enough to carry safely a moving concentrated load of 1,000 pounds.

[WSR 97-09-013, recodified as § 296-307-26015, filed 4/7/97, effective 4/7/97. Statutory Authority: RCW 49.17.040, [49.17.]050 and [49.17.]060. WSR 96-22-048, § 296-306A-26015, filed 10/31/96, effective 12/1/96.]

WAC 296-307-26018 How wide must fixed stairs be? Fixed stairways must be at least 22 inches wide.

[WSR 97-09-013, recodified as § 296-307-26018, filed 4/7/97, effective 4/7/97. Statutory Authority: RCW 49.17.040, [49.17.]050 and [49.17.]060. WSR 96-22-048, § 296-306A-26018, filed 10/31/96, effective 12/1/96.]

WAC 296-307-26021 What angles may stairways be installed at? (1) Fixed stairs must be installed at angles to the horizontal of between thirty and fifty degrees. Any uniform

combination of rise/tread dimensions may be used that will provide a stairway at an angle within the permissible range.

The following table lists examples of rise/tread dimensions that will produce a stairway within the permissible range. Rise/tread combinations are not limited to those in the table.

Angle to horizontal	Rise (in inches)	Tread run (in inches)
30°35'	6-1/2	11
32°08'	6-3/4	10-3/4
33°41'	7	10-1/2
35°16'	7-1/4	10-1/4
36°52'	7-1/2	10
38°29'	7-3/4	9-3/4
40°08'	8	9-1/2
41°44'	8-1/4	9-1/4
43°22'	8-1/2	9
45°00'	8-3/4	8-3/4
46°38'	9	8-1/2
48°16'	9-1/4	8-1/4
49°54'	9-1/2	8

(2) A permanent stairway may be installed at an angle above the fifty degree critical angle when space limitations require. Such installations (commonly called inclined ladders or ships ladders) must have handrails on both sides and open risers. They must be capable of sustaining a live load of one hundred pounds per square foot with a safety factor of four. The following preferred and critical angles from the horizontal are recommended for inclined ladders and ships ladders:

(a) 35 to 60 degrees—Preferred angle from horizontal.

(b) 60 to 70 degrees—Critical angle from horizontal.

[WSR 97-09-013, recodified as § 296-307-26021, filed 4/7/97, effective 4/7/97. Statutory Authority: RCW 49.17.040, [49.17.]050 and [49.17.]060. WSR 96-22-048, § 296-306A-26021, filed 10/31/96, effective 12/1/96.]

WAC 296-307-26024 What requirements apply to stair treads? (1) When risers are used, each tread and the top landing of a stairway should have a nose extending 1/2 to one inch beyond the face of the lower riser.

(2) Noses should have an even leading edge.

(3) All treads must be reasonably slip-resistant and the nosings must be of nonslip finish. Welded bar grating treads without nosings are acceptable if the leading edge can easily be identified by employees descending the stairway and the tread is serrated or is nonslip.

(4) Rise height and tread width must be uniform throughout any flight of stairs including any foundation structure used as one or more treads of the stairs.

[WSR 97-09-013, recodified as § 296-307-26024, filed 4/7/97, effective 4/7/97. Statutory Authority: RCW 49.17.040, [49.17.]050 and [49.17.]060. WSR 96-22-048, § 296-306A-26024, filed 10/31/96, effective 12/1/96.]

WAC 296-307-26027 What requirements apply to the length of stairways? Long flights of stairs, unbroken by landings or intermediate platforms, should be avoided. You should consider providing intermediate platforms where practical and for frequently used stairways. Stairway platforms must be at least as wide as the stairway and at least 30 inches long, measured in the direction of travel.

[WSR 97-09-013, recodified as § 296-307-26027, filed 4/7/97, effective 4/7/97. Statutory Authority: RCW 49.17.040, [49.17.]050 and [49.17.]060. WSR 96-22-048, § 296-306A-26027, filed 10/31/96, effective 12/1/96.]

WAC 296-307-26030 What requirements apply to railings and handrails on fixed stairs? Standard railings must be provided on the open sides of all exposed stairways and stair platforms. Handrails must be provided on at least one side of closed stairways, preferably on the right side descending. Stair railings and handrails must be installed according to WAC 296-307-250.

[Statutory Authority: RCW 49.17.040. WSR 98-24-096, § 296-307-26030, filed 12/1/98, effective 3/1/99. WSR 97-09-013, recodified as § 296-307-26030, filed 4/7/97, effective 4/7/97. Statutory Authority: RCW 49.17.040, [49.17.]050 and [49.17.]060. WSR 96-22-048, § 296-306A-26030, filed 10/31/96, effective 12/1/96.]

WAC 296-307-26033 What requirements apply to alternating tread-type stairs? "Alternating tread-type stairs" means stairs with a series of steps between 50 and 70 degrees from horizontal, attached to a center support rail in an alternating manner so that a user of the stairs never has both feet at the same level at the same time.

(1) Alternating tread-type stairs must be designed, installed, used, and maintained according to the manufacturer's specifications, and must have the following:

(a) Stair rails on all open sides;

(b) Handrails on both sides of enclosed stairs;

(c) Stair rails and handrails that provide an adequate handhold for a user grasping it to avoid a fall;

(d) A minimum of 17 inches between handrails;

(e) A minimum width of 22 inches overall;

(f) A minimum tread depth of 8 inches;

(g) A minimum tread width of 7 inches; and

(h) A maximum rise of 9 1/2 inches to the tread surface of the next alternating tread.

(2) Alternating tread-type stairs must have a maximum 20-foot continuous rise. Where more than a 20-foot rise is necessary to reach the top of a required stair, one or more intermediate platforms must be provided according to WAC 296-307-26027.

(3) Stairs and platforms must be installed so the top landing of the alternating tread stair is flush with the top of the landing platform.

(4) Stair design and construction must sustain a load of at least five times the normal live load, and be at least strong enough to carry safely a moving concentrated load of 1,000 pounds.

(5) Treads must have slip-resistant surfaces.

(6) Where a platform or landing is used, the width must be at least as wide as the stair and at least 30-inches deep in the direction of travel. Stairs must be flush with the top of the landing platform.

[Statutory Authority: RCW 49.17.040. WSR 98-24-096, § 296-307-26033, filed 12/1/98, effective 3/1/99. WSR 97-09-013, recodified as § 296-307-26033, filed 4/7/97, effective 4/7/97. Statutory Authority: RCW 49.17.040, [49.17.]050 and [49.17.]060. WSR 96-22-048, § 296-306A-26033, filed 10/31/96, effective 12/1/96.]

WAC 296-307-26036 What other requirements apply to fixed stairs? (1) Vertical clearance above any stair tread to an overhead obstruction must be at least 7 feet measured from the leading edge of the tread.

(2) Stairs with treads less than 9 inches wide should have open risers.

(3) Open grating type treads are desirable for outside stairs.

[WSR 97-09-013, recodified as § 296-307-26036, filed 4/7/97, effective 4/7/97. Statutory Authority: RCW 49.17.040, [49.17.]050 and [49.17.]060. WSR 96-22-048, § 296-306A-26036, filed 10/31/96, effective 12/1/96.]

WAC 296-307-270 Aerial manlift equipment.

[WSR 97-09-013, recodified as § 296-307-270, filed 4/7/97, effective 4/7/97. Statutory Authority: RCW 49.17.040, [49.17.]050 and [49.17.]060. WSR 96-22-048, § 296-306A-270, filed 10/31/96, effective 12/1/96.]

WAC 296-307-27005 What requirements apply to aerial manlift equipment? (1) We will accept safety factor test data on working or structural components from one of the following as evidence that a manlift meets minimum safety requirements:

(a) The manufacturer;

(b) A competent testing laboratory;

(c) A registered engineering firm; or

(d) A registered engineer.

If, after use, it appears doubtful whether this equipment will meet the above requirements, we may require that tests be conducted, and we may order that you make corrections.

(2) All aerial manlifts must have working brake systems.

(3) Automatic apertures must be installed in the hydraulic systems of aerial manlifts to maintain the boom in position in case any part of the hydraulic pressure system fails.

(4) Controls must be guarded by partial enclosures to minimize accidental contact.

(5) The manufacturer's recommended maximum load limit must be posted conspicuously near the controls and must be kept in a legible condition.

(6) All critical hydraulic and pneumatic components must meet the provisions of ANSI A92.2-1969, Section 4.9 Bursting Safety Factor. Critical components are those which, in case of failure, would cause a free fall or free rotation of the boom. All noncritical components must have a bursting safety factor of at least two to one.

[WSR 97-09-013, recodified as § 296-307-27005, filed 4/7/97, effective 4/7/97. Statutory Authority: RCW 49.17.040, [49.17.]050 and [49.17.]060. WSR 96-22-048, § 296-306A-27005, filed 10/31/96, effective 12/1/96.]

WAC 296-307-27010 What requirements apply to using aerial manlift equipment? (1) The manufacturer's instructional manual, if any, must be used to establish the proper operational sequences and maintenance procedures. If there is no manual, you must develop instructions. The instructions must be available for reference by operators.

(2) The assigned operator must make a daily visual inspection and perform the tests recommended by the manufacturer.

(3) Only employees qualified by training or experience may operate aerial manlifts.

(4) Employees must report defective aerial manlift equipment to you as soon as identified. Using defective equipment is prohibited when the defect may cause an accident.

(5) When moving to and from the job site, the basket of the manlift must be in the low position.

(6) Unsafe practices are prohibited, such as, sitting or standing on the basket edge, standing on material placed across the basket, or working from a ladder set inside the basket.

(7) The basket must not be rested on a fixed object so that the weight of the boom is supported by the basket.

(8) The employee and the aerial manlift equipment must maintain distance from high voltage lines according to WAC 296-307-150.

[Statutory Authority: RCW 49.17.040. WSR 98-24-096, § 296-307-27010, filed 12/1/98, effective 3/1/99. WSR 97-09-013, recodified as § 296-307-27010, filed 4/7/97, effective 4/7/97. Statutory Authority: RCW 49.17.040, [49.17.]050 and [49.17.]060. WSR 96-22-048, § 296-306A-27010, filed 10/31/96, effective 12/1/96.]

Part P

Guarding Power

Transmission Machinery

WAC 296-307-280 Guarding power transmission machinery.

[WSR 97-09-013, recodified as § 296-307-280, filed 4/7/97, effective 4/7/97. Statutory Authority: RCW 49.17.040, [49.17.]050 and [49.17.]060. WSR 96-22-048, § 296-306A-280, filed 10/31/96, effective 12/1/96.]

WAC 296-307-28002 What power transmission belts are covered by this section? WAC 296-307-280 covers all types and shapes of power transmission belts.

EXCEPTION: The following power transmission belts are exempt from WAC 296-307-280 when operating at 250 feet per minute or less:

(1) Flat belts that are one inch wide or less.

(2) Flat belts that are 2" wide or less and are free from metal lacings or fasteners.

(3) Round belts that are 1/2" in diameter or less.

(4) Single strand V-belts that are 13/32" wide or less.

[Statutory Authority: RCW 49.17.040. WSR 98-24-096, § 296-307-28002, filed 12/1/98, effective 3/1/99. WSR 97-09-013, recodified as § 296-307-28002, filed 4/7/97, effective 4/7/97. Statutory Authority: RCW 49.17.040, [49.17.]050 and [49.17.]060. WSR 96-22-048, § 296-306A-28002, filed 10/31/96, effective 12/1/96.]

WAC 296-307-28004 What does "guarded by location" mean? "Guarded by location" means that the location of a component eliminates potential hazards. A component seven feet or more above a working surface is considered guarded by location.

[WSR 97-09-013, recodified as § 296-307-28004, filed 4/7/97, effective 4/7/97. Statutory Authority: RCW 49.17.040, [49.17.]050 and [49.17.]060. WSR 96-22-048, § 296-306A-28004, filed 10/31/96, effective 12/1/96.]

WAC 296-307-28006 What general requirements apply to machine guarding? (1) All power transmission components must be guarded according to the requirements of this section.

(2) You must protect employees from coming into contact with moving machinery parts by:

(a) A guard or shield or guarding by location; or

(b) A guardrail or fence whenever a guard or shield or guarding by location is infeasible.

(3) Strength and design of guards.

(a) Guards must be designed and located to prevent inadvertent contact with the hazard.

(b) Unless otherwise specified, each guard and its supports must be strong enough to withstand the force that a 250 pound person would exert leaning on or falling against the guard.

(c) Guards must be securely fastened to the equipment or building.

(4) A guard or shield on stationary equipment must be provided at the mesh point or pinch point where the chain or belt contacts the sprocket or pulley.

(5) Machines that will throw stock, material, or objects must be covered or provided with a device designed and constructed to minimize this action. (Machines such as rip saws, rotary mowers and beaters, rotary tillers are included in this classification.)

(6) For requirements relating to the control of hazardous energy (lockout-tagout) see WAC 296-307-320.

[Statutory Authority: RCW 49.17.040. WSR 98-24-096, § 296-307-28006, filed 12/1/98, effective 3/1/99. WSR 97-09-013, recodified as § 296-307-28006, filed 4/7/97, effective 4/7/97. Statutory Authority: RCW 49.17.040, [49.17.]050 and [49.17.]060. WSR 96-22-048, § 296-306A-28006, filed 10/31/96, effective 12/1/96.]

WAC 296-307-28014 What requirements apply to prime-mover guards? "Flywheels" include flywheels, balance wheels, and flywheel pulleys mounted and revolving on crankshaft of engine or other shafting.

"Prime movers" include steam, gas, oil, and air engines, motors, steam and hydraulic turbines, and other equipment used as a source of power.

(1) Unless guarded by location, flywheels must be guarded according to the following requirements:

(a) Guard enclosures are made of sheet, perforated, or expanded metal, or woven wire.

(b) Guard rails are between 15 and 20 inches from the rim. When a flywheel extends into a pit or is within 12 inches of the floor, a standard toeboard is provided.

(c) When the upper rim of a flywheel extends through a working floor, it is surrounded by a guardrail and toeboard.

(d) Exception: When a flywheel with a smooth rim 5 feet or less in diameter cannot be guarded by the above methods, you must guard by meeting the following requirements:

On the exposed side, cover the flywheel spokes with a disk that makes a smooth surface and edge, and provides for inspection. You may leave an open space, less than 4 inches wide, between the outside edge of the disk and the rim of the wheel, to turn the wheel over. If you use a disk, keys or other projections left uncovered by the projections shall be cut off or covered.

Note: This exception does not apply to flywheels with solid web centers.

(e) At the flywheel of a gas or oil engine, you may provide an adjustable guard for starting the engine or for running adjustment. A slot opening for a jack bar is permitted.

(f) For flywheels above working areas, you must install guards that are strong enough to hold the weight of the flywheel if the shaft or wheel mounting fails.

(2) Cranks and connecting rods, when exposed to contact, must be guarded according to WAC 296-307-28046 and 296-307-28048, or by a guardrail according to WAC 296-307-28060.

(3) Tail rods or extension piston rods must be guarded according to WAC 296-307-28046 and 296-307-28048, or by a guardrail on the sides and end, with a clearance of between 15 and 20 inches when rod is fully extended.

[Statutory Authority: RCW 49.17.040. WSR 98-24-096, § 296-307-28014, filed 12/1/98, effective 3/1/99. WSR 97-09-013, recodified as § 296-307-28014, filed 4/7/97, effective 4/7/97. Statutory Authority: RCW 49.17.040, [49.17.]050 and [49.17.]060. WSR 96-22-048, § 296-306A-28014, filed 10/31/96, effective 12/1/96.]

WAC 296-307-28016 What requirements apply to guarding shafting? Revolving shafts must be guarded by a standard safeguard unless guarded by location.

(1) All shafting must be secured against excessive end movement.

(2) Guarding horizontal shafting.

(a) Unless guarded by location, all exposed parts of horizontal shafting, must be enclosed in a guard that covers the shafting completely or by a trough that covers the sides and top or sides and bottom of the shafting as location requires.

(b) Shafting under bench machines must be enclosed by a guard that covers the shafting completely or by a trough that covers the sides and top or sides and bottom of the shafting as location requires. The sides of the trough must extend to at least 6 inches from the underside of table. If shafting is near the floor, the trough must extend to at least 6 inches from the floor. In every case, the sides of trough must extend at least 2 inches beyond the shafting or projection.

Exception: Maintenance runways are exempt from this requirement. "Maintenance runway" means any permanent runway or platform used for oiling, maintenance, running adjustment, or repair work, but not for passageway.

(3) Unless guarded by location, vertical and inclined shafting must be enclosed according to WAC 296-307-28046 and 296-307-28050 through 296-307-28060.

Exception: Maintenance runways are exempt from this requirement.

(4) Projecting shaft ends.

(a) Projecting shaft ends must have a smooth edge and end and must not project more than one-half the diameter of the shaft unless guarded by nonrotating caps or safety sleeves.

(b) Unused keyways must be filled up or covered.

[Statutory Authority: RCW 49.17.040. WSR 98-24-096, § 296-307-28016, filed 12/1/98, effective 3/1/99. WSR 97-09-013, recodified as § 296-307-28016, filed 4/7/97, effective 4/7/97. Statutory Authority: RCW 49.17.040, [49.17.]050 and [49.17.]060. WSR 96-22-048, § 296-306A-28016, filed 10/31/96, effective 12/1/96.]

WAC 296-307-28018 What requirements apply to guarding pulleys? (1) Unless guarded by location, pulleys must be guarded according to WAC 296-307-28046 and 296-307-28050 through 296-307-28060. Pulleys serving as balance wheels (e.g., punch presses) on which the point of contact between belt and pulley is more than 6 feet 6 inches from

the floor or platform may be guarded with a disk covering the spokes.

(2) If the distance to the nearest fixed pulley, clutch, or hanger is equal to or less than the width of the belt, then you must provide a guide to prevent the belt from leaving the pulley on the side where insufficient clearance exists.

(3) Where there are overhanging pulleys on line, jack, or countershafts with no bearing between the pulley and the outer end of the shaft, you should provide a guide to prevent the belt from running off the pulley.

(4) Pulleys with cracks, or pieces broken out of rims are prohibited.

(5) Pulleys must be designed and balanced for the operating speed.

(6) Composition or laminated wood pulleys must not be installed where they are likely to deteriorate.

[Statutory Authority: RCW 49.17.040. WSR 98-24-096, § 296-307-28018, filed 12/1/98, effective 3/1/99. WSR 97-09-013, recodified as § 296-307-28018, filed 4/7/97, effective 4/7/97. Statutory Authority: RCW 49.17.040, [49.17.]050 and [49.17.]060. WSR 96-22-048, § 296-306A-28018, filed 10/31/96, effective 12/1/96.]

WAC 296-307-28020 What requirements apply to guarding horizontal belt, rope, and chain drives? "Belts" include all power transmission belts, such as flat belts, round belts, V-belts, etc., unless otherwise specified.

(1) Where both runs of horizontal belts are 7 feet or less from the floor level, the guard must extend to at least 15 inches above the belt or to a standard height. (See Table P-1.)

Exception: Where both runs of a horizontal belt are 42 inches or less from the floor, the belt must be fully enclosed according to WAC 296-307-28046 and 296-307-28050 through 296-307-28060.

(2) In power development rooms, a guardrail may be used instead of the guard.

[Statutory Authority: RCW 49.17.040. WSR 98-24-096, § 296-307-28020, filed 12/1/98, effective 3/1/99. WSR 97-09-013, recodified as § 296-307-28020, filed 4/7/97, effective 4/7/97. Statutory Authority: RCW 49.17.040, [49.17.]050 and [49.17.]060. WSR 96-22-048, § 296-306A-28020, filed 10/31/96, effective 12/1/96.]

WAC 296-307-28022 What requirements apply to guarding overhead horizontal belt, rope, and chain drives? (1) Unless guarded by location, overhead horizontal belts must be guarded on the sides and bottom according to WAC 296-307-28054.

(2) Unless guarded by location, horizontal overhead belts must be guarded for their entire length when:

(a) Located over passageways or work places and traveling 1,800 feet or more per minute.

(b) The center to center distance between pulleys is 10 feet or more.

(c) The belt is 8 inches wide or more.

(3) Where the upper and lower runs of horizontal belts are located so that employees can pass between them, the passage must be either:

(a) Completely barred according to WAC 296-307-28046 and 296-307-28050 through 296-307-28060; or

(b) In a passage that employees must use, there must be a platform over the lower run guarded on either side by a railing that is completely filled in with wire mesh or other filler, or by a solid barrier. The upper run must be guarded to prevent contact by the employee or by objects carried by the employee.

(4) Overhead chain and link belt drives must be guarded according to the same requirements as overhead horizontal belts.

(5) American or continuous system rope drives located where the condition of the rope (particularly the splice) cannot be constantly and conveniently observed, must have an alarm (preferably electric-bell type) that will warn when the rope begins to fray.

[Statutory Authority: RCW 49.17.040. WSR 98-24-096, § 296-307-28022, filed 12/1/98, effective 3/1/99. WSR 97-09-013, recodified as § 296-307-28022, filed 4/7/97, effective 4/7/97. Statutory Authority: RCW 49.17.040, [49.17.]050 and [49.17.]060. WSR 96-22-048, § 296-306A-28022, filed 10/31/96, effective 12/1/96.]

WAC 296-307-28024 What requirements apply to guarding vertical and inclined belts? (1) Vertical and inclined belts must be guarded according to WAC 296-307-28044 and 296-307-28050 through 296-307-28060.

(2) All guards for inclined belts must provide a minimum clearance of 7 feet between belt and floor at any point outside of the guard.

(3) A vertical or inclined belt may be guarded with a nip-point belt and pulley guard, if it is:

(a) 2-1/2 inches wide or less;

(b) Running at a speed of less than one thousand feet per minute; and

(c) Free from metal lacings or fastenings.

"Nip-point belt and pulley guard" means a device that encloses the pulley and has rounded or rolled edge slots through which the belt passes.

(4) Vertical belts running over a lower pulley more than seven feet above floor or platform must be guarded according to the same requirements as horizontal overhead belts, if the belt is:

(a) Located over passageways or work places and traveling 1,800 feet or more per minute;

(b) Eight inches wider or more.

[Statutory Authority: RCW 49.17.040. WSR 98-24-096, § 296-307-28024, filed 12/1/98, effective 3/1/99. WSR 97-09-013, recodified as § 296-307-28024, filed 4/7/97, effective 4/7/97. Statutory Authority: RCW 49.17.040, [49.17.]050 and [49.17.]060. WSR 96-22-048, § 296-306A-28024, filed 10/31/96, effective 12/1/96.]

WAC 296-307-28026 What requirements apply to guarding cone-pulley belts? (1) The cone belt and pulley must have a belt shifter that adequately guards the nip point of the belt and pulley. If the frame of the belt shifter does not adequately guard the nip point of the belt and pulley, the nip point must be protected by a vertical guard in front of the pulley that extends at least to the top of the largest step of the cone.

"Belt shifter" means a device for mechanically shifting belts from tight to loose pulleys or vice versa, or for shifting belts on cones of speed pulleys.

(2) If the belt is endless or laced with rawhide laces, and no belt shifter is used, the belt may be guarded according to the following:

(a) The nip point of the belt and pulley is protected by a nip point guard in front of the cone;

(b) The guard extends at least to the top of the largest step of the cone; and

(c) The guard is formed to show the contour of the cone.

(3) If the cone is less than 3 feet from the floor or working platform, the cone pulley and belt must be guarded to a height of 3 feet regardless of whether the belt is endless or laced with rawhide.

[WSR 97-09-013, recodified as § 296-307-28026, filed 4/7/97, effective 4/7/97. Statutory Authority: RCW 49.17.040, [49.17.]050 and [49.17.]060. WSR 96-22-048, § 296-306A-28026, filed 10/31/96, effective 12/1/96.]

WAC 296-307-28028 What requirements apply to guarding belt tighteners? (1) Suspended counterbalanced belt tighteners and all components must be substantially constructed and securely fastened. The bearings must be securely capped. You must provide a mechanism to prevent the tightener from falling in case the belt breaks.

(2) Unless guarded by location, suspended counterweights must be encased to prevent accident.

(3) Belt tighteners used for starting and stopping machinery, unless held by gravity in the "off" or "out of service" position, must have a mechanism that will hold the belt tightener away from the belt when not in use. The mechanism must automatically grip, latch or otherwise fasten itself to and hold the belt tightener in "off" or "out of service" position until released by hand.

[WSR 97-09-013, recodified as § 296-307-28028, filed 4/7/97, effective 4/7/97. Statutory Authority: RCW 49.17.040, [49.17.]050 and [49.17.]060. WSR 96-22-048, § 296-306A-28028, filed 10/31/96, effective 12/1/96.]

WAC 296-307-28030 What requirements apply to guarding gears, sprockets, and chains? (1) Gears must be guarded by one of the following methods:

(a) A complete enclosure; or

(b) A standard guard according to WAC 296-307-28050 through 296-307-28060, at least 7 feet high extending 6 inches above the mesh point of the gears; or

(c) A band guard covering the face of gear. The guard must have flanges extended inward beyond the root of the teeth on the exposed side or sides. If a part of the train of gears guarded by a band guard is less than 6 feet from the floor, the gear must be guarded by a disk guard or by a complete enclosure at least 6 feet tall.

(2) Hand-operated gears used only to adjust hand-powered machine parts may be unguarded. However, we recommend guarding these gears.

(3) Unless guarded by location, all sprocket wheels and chains must be enclosed. Where the drive extends over other machine or working areas, you must provide protection against falling parts.

Exception: This section does not apply to manually operated sprockets.

(4) When gears require frequent oiling, you must provide openings with hinged or sliding self-closing covers. All points not readily accessible must have oil feed tubes if lubricant is added while machinery is in motion.

[Statutory Authority: RCW 49.17.040. WSR 98-24-096, § 296-307-28030, filed 12/1/98, effective 3/1/99. WSR 97-09-013, recodified as § 296-307-28030, filed 4/7/97, effective 4/7/97. Statutory Authority: RCW 49.17.040, [49.17.]050 and [49.17.]060. WSR 96-22-048, § 296-306A-28030, filed 10/31/96, effective 12/1/96.]

WAC 296-307-28032 What requirements apply to guarding friction drives? When exposed to contact, the driving point of all friction drives must be guarded. All arm or spoke friction drives and all web friction drives with holes in the web must be entirely enclosed. When exposed to contact, all projecting belts on friction drives must be guarded.

[WSR 97-09-013, recodified as § 296-307-28032, filed 4/7/97, effective 4/7/97. Statutory Authority: RCW 49.17.040, [49.17.]050 and [49.17.]060. WSR 96-22-048, § 296-306A-28032, filed 10/31/96, effective 12/1/96.]

WAC 296-307-28034 What requirements apply to guarding keys, set screws, and other projections? (1) All projecting keys, set screws, and other projections in revolving parts must be removed, or made flush, or guarded by metal covers.

(2) Projections, such as exposed bolts, keys, or set screws that are part of sprockets, grooved pulleys or pulleys on stationary equipment must be shielded unless guarded by location.

Exception: This section does not apply to keys or set screws within gear or sprocket casings or other enclosures, nor to keys, set screws, or oilcups in hubs of pulleys less than 20 inches in diameter where they are within the plane of the rim of the pulley.

Note: We recommend that you not use projecting set screws or oilcups in any revolving pulley or part of machinery.

[WSR 97-09-013, recodified as § 296-307-28034, filed 4/7/97, effective 4/7/97. Statutory Authority: RCW 49.17.040, [49.17.]050 and [49.17.]060. WSR 96-22-048, § 296-306A-28034, filed 10/31/96, effective 12/1/96.]

WAC 296-307-28036 What requirements apply to guarding collars and couplings? (1) All revolving collars, including split collars, must be cylindrical. Screws or bolts used in collars must not project beyond the largest periphery of the collar.

(2) Shaft couplings must be constructed to prevent hazard from bolts, nuts, set screws, or revolving surfaces. Bolts, nuts, and set screws are permitted where they are covered with safety sleeves or where they are used parallel with the shafting and are countersunk or where they do not extend beyond the flange of the coupling.

[WSR 97-09-013, recodified as § 296-307-28036, filed 4/7/97, effective 4/7/97. Statutory Authority: RCW 49.17.040, [49.17.]050 and [49.17.]060. WSR 96-22-048, § 296-306A-28036, filed 10/31/96, effective 12/1/96.]

WAC 296-307-28038 Must self-lubricating bearings be used? We recommend that you use self-lubricating bearings. All drip cups and pans must be securely fastened.

[WSR 97-09-013, recodified as § 296-307-28038, filed 4/7/97, effective 4/7/97. Statutory Authority: RCW 49.17.040, [49.17.]050 and [49.17.]060. WSR 96-22-048, § 296-306A-28038, filed 10/31/96, effective 12/1/96.]

WAC 296-307-28040 What requirements apply to guarding clutches, cutoff couplings, and clutch pulleys? (1) Unless guarded by location, clutches, cutoff couplings, or clutch pulleys with projecting parts must be enclosed by a stationary guard constructed according to WAC 296-307-28046. You may use a "U" type guard.

(2) In enginerooms, a guardrail, preferably with toeboard, may be used instead of the guard if the room is only occupied by engineroom attendants.

(3) A bearing support next to a friction clutch or cutoff coupling must have self-lubricating bearings that require infrequent maintenance.

[Statutory Authority: RCW 49.17.040. WSR 98-24-096, § 296-307-28040, filed 12/1/98, effective 3/1/99. WSR 97-09-013, recodified as § 296-307-28040, filed 4/7/97, effective 4/7/97. Statutory Authority: RCW 49.17.040, [49.17.]050 and [49.17.]060. WSR 96-22-048, § 296-306A-28040, filed 10/31/96, effective 12/1/96.]

WAC 296-307-28042 What requirements apply to guarding belt shifters, clutches, shippers, poles, perches, and fasteners? "Belt pole" (sometimes called a "belt shipper" or "shipper pole") means a device used in shifting belts on and off fixed pulleys on line or countershaft where there are no loose pulleys.

(1) Tight and loose pulleys must have a permanent belt shifter with a mechanical means to prevent the belt from creeping from loose to tight pulley.

(2) Belt shifter and clutch handles must be rounded. They must be as far as possible from danger of accidental contact, but within easy reach of the operator. Where belt shifters are not directly over a machine or bench, the handles must be cut off 6 feet 6 inches above floor level.

(3) All belt and clutch shifters of the same type in each shop should move in the same direction to stop machines, i.e., either all right or all left.

Exception: This requirement does not apply to a friction clutch on a countershaft carrying two clutch pulleys with open and crossed belts. In this case the shifter handle has three positions and the machine is at a standstill when the clutch handle is in the neutral or center position.

(4) When belt poles must be used as a substitute for mechanical shifters, they must be big enough for employees to grasp them securely. Poles must be smooth and preferably of straight grain hardwood, such as ash or hickory. The edges of rectangular poles should be rounded. Poles should extend from the top of the pulley to within approximately 40 inches of the floor or working platform.

(5) Where loose pulleys or idlers are not practical, belt perches such as brackets, rollers, etc., must be used to keep idle belts away from the shafts. Perches should be substantial and designed for safe belt shifting.

(6) Belts that must be shifted by hand and belts within seven feet of the floor or working platform that are not guarded according to WAC 296-307-28046 must not be fastened with metal, nor with any other fastening that creates a hazard.

[Statutory Authority: RCW 49.17.040. WSR 98-24-096, § 296-307-28042, filed 12/1/98, effective 3/1/99. WSR 97-09-013, recodified as § 296-307-28042, filed 4/7/97, effective 4/7/97. Statutory Authority: RCW 49.17.040, [49.17.]050 and [49.17.]060. WSR 96-22-048, § 296-306A-28042, filed 10/31/96, effective 12/1/96.]

WAC 296-307-28044 What materials must be used for standard guards? (1) Standard guards must be made of the following materials:

(a) Expanded metal;

(b) Perforated or solid sheet metal;

(c) Wire mesh on a frame of angle iron; or

(d) Iron pipe securely fastened to the floor or the frame of the machine.

(2) Wire mesh should have wires that are securely fastened at every cross point either by welding, soldering, or galvanizing.

Exception: Diamond or square wire mesh made of No. 14 gauge wire, 3/4-inch mesh or heavier is exempt from this requirement.

[WSR 97-09-013, recodified as § 296-307-28044, filed 4/7/97, effective 4/7/97. Statutory Authority: RCW 49.17.040, [49.17.]050 and [49.17.]060. WSR 96-22-048, § 296-306A-28044, filed 10/31/96, effective 12/1/96.]

WAC 296-307-28046 How must standard guards be manufactured? (1) Guards must be free from burrs, sharp edges, and sharp corners.

(2) Expanded metal, sheet or perforated metal, and wire mesh must be securely fastened to the frame by one of the following methods:

(a) Rivets or bolts spaced not more than five inches center to center. In case of expanded metal or wire mesh, metal strips or clips must be used to form a washer for rivets or bolts.

(b) Welding to frame every four inches.

(c) Weaving through channel or angle frame, or, if No. 14 gauge 3/4-inch mesh or heavier is used, by bending entirely around rod frames.

(d) To fill openings in pipe railing with expanded metal, wire mesh, or sheet metal, make the filler material into panels with rolled edges or edges bound with "V" or "U" edging. The edging must be of at least No. 24 gauge sheet metal fastened to the panels with bolts or rivets spaced a maximum of 5 inches center to center. The bound panels must be fastened to the railing by sheet-metal clips spaced a maximum of 5 inches center to center.

(e) Diamond or square mesh made of crimped wire fastened into channels, angle iron, or round-iron frames may also be used as a filler in guards. Size of mesh must correspond to Table P-1.

(3) Where guard design requires filler material greater than 12 square feet, additional frame members must be provided to ensure that the panel area is a maximum of 12 square feet.

(4) All joints of framework must be as strong as the material of the frame.

[WSR 97-09-013, recodified as § 296-307-28046, filed 4/7/97, effective 4/7/97. Statutory Authority: RCW 49.17.040, [49.17.]050 and [49.17.]060. WSR 96-22-048, § 296-306A-28046, filed 10/31/96, effective 12/1/96.]

WAC 296-307-28048 What requirements apply to disk, shield, and U-guards? (1) A disk guard must have a sheet-metal disk of at least No. 22 gauge fastened by U-bolts or rivets to the spokes of pulleys, flywheels, or gears. To prevent contact with sharp edges of the disk, the edge must be rolled or wired. In all cases, the nuts must have locknuts on the unexposed side of the wheel.

(2) A shield guard must have a frame filled in with wire mesh or expanded, perforated, or solid sheet metal.

(3) If the shield area is less than six square feet, the wire mesh or expanded metal may be fastened in a framework of 3/8-inch solid rod, 3/4-inch by 3/4-inch by 1/8-inch angle iron, or a metal construction of equivalent strength. Metal shields may have edges entirely rolled around a 3/8-inch solid iron rod.

(4) A U-guard consisting of a flat surface with edge members must cover the under surface and lower edge of a belt, multiple chain, or rope drive. It must be constructed of materials specified in Table P-1, and must meet the requirements of WAC 296-307-28054 through 296-307-28058. Edges must be smooth and, if the size of the guard requires, be reinforced by rolling, wiring, or by binding with angle or flat iron.

[Statutory Authority: RCW 49.17.040. WSR 98-24-096, § 296-307-28048, filed 12/1/98, effective 3/1/99. WSR 97-09-013, recodified as § 296-307-28048, filed 4/7/97, effective 4/7/97. Statutory Authority: RCW 49.17.040, [49.17.]050 and [49.17.]060. WSR 96-22-048, § 296-306A-28048, filed 10/31/96, effective 12/1/96.]

WAC 296-307-28050 What materials must be used for guards? The materials and dimensions specified in this section apply to all guards. The materials and dimensions specified are minimum requirements. You may choose to provide stronger guards.

Exception: Horizontal overhead belts, rope, cable, or chain guards more than 7 feet above floor, or platform must meet the requirements outlined in Table P-2.

(1) The framework of all guards must have minimum dimensions of 1-inch by 1-inch by 1/8-inch for angle iron, 3/4-inch inside diameter for metal pipe, or metal construction of equivalent strength.

Exception: Guards thirty inches tall or less with a total surface area of ten square feet or less may have a framework of 3/8-inch solid rod, 3/4-inch by 3/4-inch by 1/8-inch angle iron, or metal construction of equivalent strength. The filling material must correspond to the requirements of Table 1.

(a) All guards must be rigidly braced every 3 feet of their height to some fixed part of machinery or building structure. Where a guard is exposed to contact with moving equipment additional strength may be necessary.

(b) The framework for all guards fastened to the floor or working platform and without other support or bracing must consist of 1-1/2-inch by 1-1/2-inch by 1/8-inch angle iron, metal pipe of 1-1/2-inch inside diameter, or metal construction of equivalent strength. All rectangular guards must have at least four upright frame members that extend to the floor and are securely fastened. Cylindrical guards must have at least three supporting members that extend to the floor.

(2) Where guards are exposed to unusual wear, deterioration, or impact, heavier material and construction should be used to protect against the specific hazards involved.

[WSR 97-09-013, recodified as § 296-307-28050, filed 4/7/97, effective 4/7/97. Statutory Authority: RCW 49.17.040, [49.17.]050 and [49.17.]060. WSR 96-22-048, § 296-306A-28050, filed 10/31/96, effective 12/1/96.]

WAC 296-307-28052 When may wood guards be used? Wood guards may be used where fumes would cause rapid deterioration of metal guards and outdoors where extreme cold or extreme heat make metal guards and railings undesirable.

(1) Wood must be sound, tough, and without loose knots.

(2) Guards must be made of planed lumber not less than 1-inch rough board measure, with rounded edges and corners.

(3) Wood guards must be securely fastened together with wood screws, hardwood dowel pins, bolts, or rivets.

(4) Wood guards must be equal in strength and rigidity to metal guards specified in WAC 296-307-28050 and Table P-1.

Note: Requirements for the construction of standard wood railings are in WAC 296-307-28060.

[Statutory Authority: RCW 49.17.040. WSR 98-24-096, § 296-307-28052, filed 12/1/98, effective 3/1/99. WSR 97-09-013, recodified as § 296-307-28052, filed 4/7/97, effective 4/7/97. Statutory Authority: RCW 49.17.040, [49.17.]050 and [49.17.]060. WSR 96-22-048, § 296-306A-28052, filed 10/31/96, effective 12/1/96.]

WAC 296-307-28054 What materials may be used for guarding horizontal overhead belts? (1) Guards for horizontal overhead belts must run the entire length of the belt and follow the line of the pulley to the ceiling or extend to the nearest wall.

Exception: Where belts are located so that it is impractical to extend the guard to wall or ceiling, the guard must completely enclose the top and bottom runs of the belt and the face of pulleys.

(2) The guard and its supporting parts must be securely fastened to the wall or ceiling by gimlet-point lag screws or through bolts. In masonry, expansion bolts must be used. We recommend using bolts placed horizontally through floor beams or ceiling rafters.

(3) When necessary, suitable reinforcement must be provided for the ceiling rafters or overhead floor beams to sustain safely the weight and stress imposed by the guard.

(4) The interior surface of all guards must be smooth and free from projections.

Exception: Where construction demands it, protruding shallow roundhead rivets may be used.

[WSR 97-09-013, recodified as § 296-307-28054, filed 4/7/97, effective 4/7/97. Statutory Authority: RCW 49.17.040, [49.17.]050 and [49.17.]060. WSR 96-22-048, § 296-306A-28054, filed 10/31/96, effective 12/1/96.]

WAC 296-307-28056 What clearance must be maintained between guards and power transmission machinery? (1) Overhead belt guards must be at least one-quarter wider than the belt they protect, with a maximum clearance of 6 inches on each side. Overhead rope-drive and block and roller-chain-drive guards must be at least six inches wider than the drive on each side.

(2) Overhead silent chain-drive guards with the chain held on sprockets must have side clearance of:

(a) On drives of 20-inch centers or less, at least 1/4 inch from the nearest moving chain part, and

(b) On drives of over 20-inch centers, a minimum of 1/2 inch from the nearest moving chain part.

(3) Table 2 gives the sizes of materials and construction specifications for guards for belts that are 10 inches wide or more. All materials for overhead belt guards must be at least the size specified in Table 2 for belts 10 to 14 inches wide, even if the overhead belt is less than 10 inches wide. However, No. 20 gauge sheet metal may be used as a filler on guards for belts less than 10 inches wide. Expanded metal, because of the sharp edges, should not be used as a filler in horizontal belt guards.

(4) For clearance between guards and belts, ropes, or chains see Table P-2.

[WSR 97-09-013, recodified as § 296-307-28056, filed 4/7/97, effective 4/7/97. Statutory Authority: RCW 49.17.040, [49.17.]050 and [49.17.]060. WSR 96-22-048, § 296-306A-28056, filed 10/31/96, effective 12/1/96.]

WAC 296-307-28058 How must overhead rope and chain-drive guards be constructed? (1) Overhead-rope and chain-drive guard construction must meet the requirements for overhead-belt guard construction of similar width.

Exception: The filler material must be solid, according to Table P-2, unless fire hazard demands the use of open construction.

(2) A side guard member of the same solid filling material should extend 2 inches above the level of the lower run of the rope or chain drive and 2 inches within the periphery of the pulleys that the guard encloses, forming a trough.

(3) The side filler members should be reinforced on the edges with 1-1/2-inch by 1/4-inch flat steel, riveted to the filling material at 8 inch centers or less. The reinforcing strip should be fastened or bolted to all guard supporting members with at least one 3/8-inch rivet or bolt at each intersection, and the ends should be secured to the ceiling with lag screws or bolts.

(4) The filling material must be fastened to the framework of the guard and the filler supports by 3/16-inch rivets spaced on 4-inch centers. Measure the width of a multiple drive from the outside of the first to the outside of the last rope or chain in the group accommodated by the pulley.

[WSR 97-09-013, recodified as § 296-307-28058, filed 4/7/97, effective 4/7/97. Statutory Authority: RCW 49.17.040, [49.17.]050 and [49.17.]060. WSR 96-22-048, § 296-306A-28058, filed 10/31/96, effective 12/1/96.]

WAC 296-307-28060 What materials must be used for guardrails and toeboards? (1) A guardrail used to guard power transmission parts must be 42 inches tall, with a midrail between the top rail and the floor.

(2) Posts must be 8 feet apart or less. They must be permanent and substantial, smooth, and free from protruding nails, bolts, and splinters. If made of pipe, the post must be at least 1-1/4 inches inside diameter. If posts are made of metal shapes or bars, the section must be as strong as posts made of 1-1/2 by 1-1/2 by 3/16-inch angle iron. If posts are made of wood, the posts must be at least 2 by 4 inches. The upper rail must be 2 by 4 inches, or two 1 by 4 inch strips, one at the top and one at the side of the posts. The midrail must be at least 1 by 4 inches.

(3) The rails (metal shapes, metal bars, or wood), should be on the side of the posts that gives the best protection and support. Where panels are fitted with expanded metal or wire mesh (as noted in Table 1) the middle rails may be omitted. Where guard is exposed to contact with moving equipment, additional strength may be necessary.

(4) Toeboards must be at least 4 inches tall, of wood, metal, or metal grill of a maximum 1-inch mesh. Toeboards at flywheel pits should be placed as close to edge of the pit as possible.

Table P-1
TABLE OF STANDARD MATERIALS AND DIMENSIONS

Material	Clearance from moving part at all points (inches)	Largest mesh or opening allowable (inches)	Minimum gauge (U.S. Standard) or thickness (inches)	Minimum height of guard from floor or platform level (feet)
Woven wire	Under 2 2-4 Under 4 4-15	3/8 1/2 1/2 2	No. 16 No. 16 No. 16 No. 12	7 7 7 7
Expanded metal	Under 4 4-15	1/2 2	No. 18 No. 13	7 7
Perforated metal	Under 4 4-15	1/2 2	No. 20 No. 14	7 7
Sheet metal	Under 4 4-15		No. 22 No. 22	7 7
Wood or metal strip crossed	Under 4 4-15	3/8 2	Wood 3/4 Metal No. 16 Wood 3/4 Metal No. 16	 7 7
Wood or metal strip not crossed	Under 4 4-15	1/2 width 1 width	Wood 3/4 Metal No. 16 Wood 3/4 Metal No. 16	 7 7
Standard rail	Min. 15 Max. 20			

Table P-2
HORIZONTAL OVERHEAD BELTS, ROPES, AND CHAINS 7 FEET OR MORE ABOVE FLOOR OR PLATFORM

	Width 0"-14" inclusive	Material
MEMBERS		
Framework	1 1/2" x 1 1/2" x 1/4"	Angle iron
Filler (belt guards)	1 1/2" x 3/16"	Flat iron
Filler and vertical side member	No. 20 A.W.G.	Solid sheet metal
Filler supports	2" x 5/16" flat iron	Flat and angle
Guard supports	2" x 5/16"	Flat iron
FASTENINGS		
Filler supports to framework	(2) 3/16"	Rivets
Filler flats to supports (belt guards)	(1) 5/16"	Flush rivets
Filler to frame and supports (chain guards)	3/16"	Rivets spaced
Guard supports to framework	(2) 3/6"	Rivets or bolts
Guard and supports to overheard ceiling	1/4" x 3 1/2" lag screws or 1/2" bolts	Lag screws or bolts
DETAILS-SPACING, ETC.		
Width of guards	One-quarter wider than belt, rope, or chain drive	
Spacing between filler supports	20" center to center	
Spacing between filler flats (belt guards)	2" apart	
Spacing between guard supports	36" center to center	
OTHER BELT GUARD FILLING PERMITTED		
Sheet metal fastened as in chain guards	No. 20 A.W.G.	Solid or perforated
Woven Wire, 2" mesh	No. 12 A.W.G.	
CLEARANCE FROM OUTSIDE OF BELT, ROPE, OR CHAIN DRIVE TO GUARD		
Distance center to center of shafts	Up to 15' inclusive	Over 40'
Clearance from belt, or chain to guard	16"	120"
	Width over 14" to 24" inclusive	Material
MEMBERS		
Framework	2" x 2" x 5/16"	Angle iron
Filler (belt guards)	2" x 3/16"	Flat iron
Filler and vertical side member	No. 18 A.W.G.	Solid sheet metal
Filler supports	2" x 3/8" flat iron	Flat and angle
Guard supports	2" x 3/8"	Flat iron
FASTENINGS		
Filler supports to framework	(2) 3/6"	Rivets
Filler flats to supports (belt guards)	(1) 5/16"	Flush rivets
Filler to frame and supports (chain guards)	8" centers on sides and 4" centers on bottom	
Guard supports to framework	(2) 7/16"	Rivets or bolts
Guard and supports to overheard ceiling	5/8" x 4" lag screws or 5/8" bolts	Lag screws or bolts
DETAILS-SPACING, ETC.		
Width of guards		
Spacing between filler supports	16" C. to C	

	Width 0"-14" inclusive	Material
Spacing between filler flats (belt guards)	2 1/2" apart	
Spacing between guard supports	36" C. to C	
OTHER BELT GUARD FILLING PERMITTED		
Sheet metal fastened as in chain guards	No. 18 A.W.G.	Solid or perforated
Woven wire, 2" mesh	No. 10 A.W.G.	
CLEARANCE FROM OUTSIDE OF BELT, ROPE, OR CHAIN DRIVE TO GUARD		
Distance center to center of shafts	Over 15' to 25'	Over 40' inclusive
Clearance from belt/chain to guard	10"	20"
	Width over 24"	Material
MEMBERS		
Framework	3" x 3" x 3/8"	Angle iron
Filler (belt guards)	2" x 5/16"	Flat iron
Filler and vertical side member	No. A.W.G.	Solid sheet metal
Filler supports	2 1/2" x 2 1/2" x 1/4" angle	Flat and angle
Guard supports	2 1/2" x 3/8"	Flat iron
FASTENINGS		
Filler supports to framework	(3) 1/2"	Rivets
Filler flats to supports (belt guards)	(2) 3/8"	Flush rivets
Filler to frame and supports (chain guards)		
Guard supports to frame work	(2) 5/8"	Rivets or bolts
Guard and supports to overhead ceiling	3/4" x 6" lag screws or 3/4" bolt	Lag screws or bolts
DETAILS-SPACING, ETC.		
Width of guards		
Spacing between filler supports	16" C. to C.	
Spacing between filler flats (belt guards)	4" apart	
Spacing between guard supports	36" C. to C.	
OTHER BELT GUARD FILLING PERMITTED		
Sheet metal fastened as in chain guards	No. 18 A.W.G.	Solid or perforated
Woven wire, 2" mesh	No. 8 A.W.G.	
CLEARANCE FROM OUTSIDE OF BELT, ROPE, OR CHAIN DRIVE TO GUARD		
Distance center to center of shafts	Over 25' to 40' inclusive	Over 40'
Clearance from belt, or chain to guard	15"	20"

[Statutory Authority: RCW 49.17.040. WSR 98-24-096, § 296-307-28060, filed 12/1/98, effective 3/1/99. WSR 97-09-013, recodified as § 296-307-28060, filed 4/7/97, effective 4/7/97. Statutory Authority: RCW 49.17.040, [49.17.]050 and [49.17.]060. WSR 96-22-048, § 296-306A-28060, filed 10/31/96, effective 12/1/96.]

WAC 296-307-28062 How must shafting be maintained? (1) Shafting must be kept in alignment, and free from rust and excess oil or grease.

(2) Where explosives, explosive dusts, flammable vapors or flammable liquids exist, guards must take into account the hazard of static sparks from shafting.

[WSR 97-09-013, recodified as § 296-307-28062, filed 4/7/97, effective 4/7/97. Statutory Authority: RCW 49.17.040, [49.17.]050 and [49.17.]060. WSR 96-22-048, § 296-306A-28062, filed 10/31/96, effective 12/1/96.]

WAC 296-307-28064 How must pulleys be maintained? (1) Pulleys must be kept in proper alignment to prevent belts from running off.

(2) Any pulley carrying a nonshifting belt should have a crowned face.

(3) Cast-iron pulleys should be tested frequently with a hammer to detect cracks in rim or spokes. The sound is different depending on whether the belt is or is not on the pulley.

(4) Split pulleys should be inspected to be sure that all bolts holding together the sections of the pulley are tight.

[WSR 97-09-013, recodified as § 296-307-28064, filed 4/7/97, effective 4/7/97. Statutory Authority: RCW 49.17.040, [49.17.]050 and [49.17.]060. WSR 96-22-048, § 296-306A-28064, filed 10/31/96, effective 12/1/96.]

WAC 296-307-28066 How must belts be maintained? (1) Quarter-twist belts without an idler can be used on drives

running in one direction only. They will run off a pulley when direction is reversed.

(2) You must inspect belts, lacings, and fasteners to be sure they are kept in good repair.

(3) Dressing should not be applied when the belt or rope is in motion; but, when necessary, it should be applied where belts or rope leave the pulley, not where they approach. The same precautions apply to lubricating chains. In the case of V-belts, belt dressing is neither necessary nor advisable.

[WSR 97-09-013, recodified as § 296-307-28066, filed 4/7/97, effective 4/7/97. Statutory Authority: RCW 49.17.040, [49.17.]050 and [49.17.]060. WSR 96-22-048, § 296-306A-28066, filed 10/31/96, effective 12/1/96.]

WAC 296-307-28068 How must other equipment be maintained? (1) You must inspect all power-transmission equipment at least every sixty days and ensure that it is kept in good working condition at all times.

(2) Bearings must be kept in alignment and properly adjusted.

(3) Hangers must be inspected to ensure that all supporting bolts and screws are tight and that supports of hanger boxes are adjusted properly.

(4) The oilers must wear tightfitting clothing and should use cans with long spouts to keep their hands out of danger. Machinery must be oiled when not in motion, wherever possible.

[WSR 97-09-013, recodified as § 296-307-28068, filed 4/7/97, effective 4/7/97. Statutory Authority: RCW 49.17.040, [49.17.]050 and [49.17.]060. WSR 96-22-048, § 296-306A-28068, filed 10/31/96, effective 12/1/96.]

WAC 296-307-290 Auger conveying equipment.

[WSR 97-09-013, recodified as § 296-307-290, filed 4/7/97, effective 4/7/97. Statutory Authority: RCW 49.17.040, [49.17.]050 and [49.17.]060. WSR 96-22-048, § 296-306A-290, filed 10/31/96, effective 12/1/96.]

WAC 296-307-29005 What requirements apply to auger conveying equipment? "Augers" means screw conveyors and related accessories designed primarily for conveying agricultural materials on farms.

(1) Power take-off shafts must be guarded according to WAC 296-307-28046.

(2) All augers must be covered or guarded when exposed to contact.

(3) You must ensure that each sweep auger has its top half shielded by a guard. All guard openings must be no larger than 4 3/4 inches across.

(4) You must ensure that the exposed auger at the hopper and the intake is guarded or designed to prevent accidental contact with the rotating inlet area. The guard must extend at least 2 1/2 inches above and below the exposed auger. Openings in the guard, for the free flow of material, must be no larger than 4 3/4 inches across and must be strong enough to support 250 pounds at mid span.

(5) The hand raising winch must have a control that will hold the auger at any angle, and that will only respond to the control. You must ensure that the operator is able to lower the auger without disengaging the control. The maximum force required on the handle to raise or lower the auger manually must be 50 pounds.

(6) The wire rope lifting pulleys must be grooved to fit the wire rope used.

(7) In order to avoid separation, you must provide a positive restraint between the auger tube and the under-carriage lifting arm. You must provide stops that restrict the maximum raised angle and minimum lowered angle.

(8) Wire ropes (cables) must be rust resistant and selected for the design load and service intended.

(9) You must provide the auger operator with service and operation instructions that include safe operation and servicing practices.

[Statutory Authority: RCW 49.17.040. WSR 98-24-096, § 296-307-29005, filed 12/1/98, effective 3/1/99. WSR 97-09-013, recodified as § 296-307-29005, filed 4/7/97, effective 4/7/97. Statutory Authority: RCW 49.17.040, [49.17.]050 and [49.17.]060. WSR 96-22-048, § 296-306A-29005, filed 10/31/96, effective 12/1/96.]

WAC 296-307-29010 What other requirements apply to auger conveying equipment manufactured after October 25, 1976? You must ensure that auger conveying equipment manufactured after October 25, 1976, is guarded as follows:

(1) Sweep-arm material-gathering mechanisms used on the top surface of materials within silo structures are guarded. The lower or leading edge of the guard is no more than 12 inches above the material surface and no less than 6 inches in front of the leading edge of the rotating member of the gathering mechanism. The guard is parallel to and extends the fullest practical length of the material gathering mechanism.

(2) Exposed auger flighting on portable grain augers is guarded with either grating type guards or solid baffle style covers as follows:

(a) The largest dimensions or openings in grating type guards through which materials flow is 4-3/4 inches. The opening area is a maximum of 10 square inches. The opening is least 2-1/2 inches from the rotating flighting.

(b) Slotted openings in solid baffle style covers are a maximum of 1-1/2 inches wide, or less than 3-1/2 inches from the exposed flighting.

[WSR 97-09-013, recodified as § 296-307-29010, filed 4/7/97, effective 4/7/97. Statutory Authority: RCW 49.17.040, [49.17.]050 and [49.17.]060. WSR 96-22-048, § 296-306A-29010, filed 10/31/96, effective 12/1/96.]

WAC 296-307-300 Guarding farmstead equipment.

[WSR 97-09-013, recodified as § 296-307-300, filed 4/7/97, effective 4/7/97. Statutory Authority: RCW 49.17.040, [49.17.]050 and [49.17.]060. WSR 96-22-048, § 296-306A-300, filed 10/31/96, effective 12/1/96.]

WAC 296-307-30003 What does this section cover? WAC 296-307-300 applies to the guarding and care of farmstead equipment.

"Farmstead equipment" means agricultural equipment normally used in a stationary manner. This includes, but is not limited to, materials handling equipment and accessories for such equipment whether or not the equipment is an integral part of a building.

[Statutory Authority: RCW 49.17.040. WSR 98-24-096, § 296-307-30003, filed 12/1/98, effective 3/1/99. WSR 97-09-013, recodified as § 296-307-30003, filed 4/7/97, effective 4/7/97. Statutory Authority: RCW 49.17.040, [49.17.]050 and [49.17.]060. WSR 96-22-048, § 296-306A-30003, filed 10/31/96, effective 12/1/96.]

WAC 296-307-30006 How must power takeoff shafts of farmstead equipment be guarded? (1) You must ensure that all power takeoff shafts, including rear-mounted, mid-mounted or side-mounted shafts, are guarded either by a master shield or by other protective guarding. The master shield must be strong enough to prevent damaging the shield when a 250-pound operator mounts or dismounts the tractor using the shield as a step.

(2) Power takeoff driven equipment must be guarded to prevent employee contact with rotating parts of the power drive system. Where power takeoff driven equipment requires removal of the tractor master shield, the equipment must also include protection from any portion of the tractor power takeoff shaft that protrudes from the tractor.

(3) Signs must be placed at prominent locations on power takeoff driven equipment specifying that power drive system safety shields must be kept in place.

[WSR 97-09-013, recodified as § 296-307-30006, filed 4/7/97, effective 4/7/97. Statutory Authority: RCW 49.17.040, [49.17.]050 and [49.17.]060. WSR 96-22-048, § 296-306A-30006, filed 10/31/96, effective 12/1/96.]

WAC 296-307-30009 How must other power transmission components of farmstead equipment be guarded? (1) All power transmission parts must be guarded according to WAC 296-307-280.

(2) Smooth shafts and shaft ends (without any projecting bolts, keys, or set screws) may be unguarded if they:

(a) Revolve at less than 10 RPM; and

(b) Are part of feed handling equipment used on the top surface of materials in bulk storage facilities.

[Statutory Authority: RCW 49.17.040. WSR 98-24-096, § 296-307-30009, filed 12/1/98, effective 3/1/99. WSR 97-09-013, recodified as § 296-307-30009, filed 4/7/97, effective 4/7/97. Statutory Authority: RCW 49.17.040, [49.17.]050 and [49.17.]060. WSR 96-22-048, § 296-306A-30009, filed 10/31/96, effective 12/1/96.]

WAC 296-307-30012 How must functional components of farmstead equipment be guarded? The following functional components must be shielded to a degree consistent with the intended function and operator's vision of the component:

- Snapping or husking rolls;
- Straw spreaders and choppers;
- Cutterbars;
- Flail rotors;
- Rotary beaters;
- Mixing augers;
- Feed rolls;
- Rotary tillers; and
- Similar units that must be exposed for proper function.

[WSR 97-09-013, recodified as § 296-307-30012, filed 4/7/97, effective 4/7/97. Statutory Authority: RCW 49.17.040, [49.17.]050 and [49.17.]060. WSR 96-22-048, § 296-306A-30012, filed 10/31/96, effective 12/1/96.]

WAC 296-307-30015 When may guards be removed on farmstead equipment? (1) Guards, shields and access doors must be in place when the equipment is in operation.

(2) Where removal of a guard or access door will expose an employee to any component that continues to rotate after the power is disengaged, you must provide in the immediate area, a safety sign warning the employee:

(a) To look and listen for evidence of rotation; and

(b) To refrain from removing the guard or access door until all components have stopped.

(3) On equipment manufactured after October 25, 1976, a readily visible or audible warning of rotation is required.

[WSR 97-09-013, recodified as § 296-307-30015, filed 4/7/97, effective 4/7/97. Statutory Authority: RCW 49.17.040, [49.17.]050 and [49.17.]060. WSR 96-22-048, § 296-306A-30015, filed 10/31/96, effective 12/1/96.]

WAC 296-307-30018 What requirements apply to electrical control for maintaining and servicing farmstead equipment? (1) You must ensure that only the employee maintaining or servicing equipment has control of the electrical power source by:

(a) Providing an exclusive, positive locking means on the main switch that can be operated only by the employee performing the maintenance or service; or

(b) For material handling equipment in a bulk storage structure, by providing on the equipment an electrical or mechanical means to disconnect the power. Minimum lockout means must meet the requirements of WAC 296-307-320.

(2) All circuit protection devices, including those that are an integral part of a motor, must have a manual reset, except where:

(a) A manual reset is infeasible because of the nature of the operation, distances involved, and the amount of time normally spent by employees in the area of the affected equipment;

(b) An electrical disconnect switch is available to the employee within fifteen feet of the equipment being maintained or serviced; and

(c) A sign, prominently posted near each hazardous component, warns the employee that unless the electrical disconnect switch is utilized, the motor could automatically reset while the employee is working on the hazardous component.

[Statutory Authority: RCW 49.17.040. WSR 98-24-096, § 296-307-30018, filed 12/1/98, effective 3/1/99. WSR 97-09-013, recodified as § 296-307-30018, filed 4/7/97, effective 4/7/97. Statutory Authority: RCW 49.17.040, [49.17.]050 and [49.17.]060. WSR 96-22-048, § 296-306A-30018, filed 10/31/96, effective 12/1/96.]

WAC 296-307-30021 What additional guarding requirements apply to farmstead equipment? (1) You must ensure that carton or bag stitching machines are properly safeguarded to prevent anyone from coming in contact with the stitching head and other pinch or nip points.

(2) The point of operation of all machines must be guarded. The guard must be designed and constructed to prevent the operator from having any part of the body in the danger zone during the operating cycle.

Note: The distance from the point-of-operation guards to the danger line depends on the size of the opening. The required distances are outlined in the table below:

Guarding line or distance of opening from point of operation hazard (inches)	Maximum width of opening (inches)
1/2 to 1 1/2	1/4
1 1/2 to 2 1/2	3/8
2 1/2 to 3 1/2	1/2

Guarding line or distance of opening from point of operation hazard (inches)	Maximum width of opening (inches)
3 1/2 to 5 1/2	5/8
5 1/2 to 6 1/2	3/4
6 1/2 to 7 1/2	7/8
7 1/2 to 12 1/2	1 1/4
12 1/2 to 15 1/2	1 1/2
15 1/2 to 17 1/2	1 7/8
17 1/2 to 31 1/2	2 1/8

[WSR 97-09-013, recodified as § 296-307-30021, filed 4/7/97, effective 4/7/97. Statutory Authority: RCW 49.17.040, [49.17.]050 and [49.17.]060. WSR 96-22-048, § 296-306A-30021, filed 10/31/96, effective 12/1/96.]

Part Q

Control of Hazardous

Energy (Lockout-tagout)

WAC 296-307-320 Control of hazardous energy (lockout-tagout).

[WSR 97-09-013, recodified as § 296-307-320, filed 4/7/97, effective 4/7/97. Statutory Authority: RCW 49.17.040, [49.17.]050 and [49.17.]060. WSR 96-22-048, § 296-306A-320, filed 10/31/96, effective 12/1/96.]

WAC 296-307-32001 What does this section cover? (1) WAC 296-307-320 covers the servicing and maintenance of machines and equipment in which the unexpected start up of the machine or equipment or release of stored energy could cause injury to employees. This standard establishes minimum performance requirements for the control of such hazardous energy.

(2) Normal production operations are not covered by this standard. Servicing and/or maintenance that takes place during normal production operations is covered by this standard only if:

(a) An employee is required to remove or bypass a guard or other safety device; or

(b) An employee is required to place a body part into a point of operation or where an associated danger zone exists during a machine operating cycle.

Exception: Minor servicing activities, that take place during normal production operations, are not covered by this standard if they are routine, repetitive, and integral to the use of the equipment for production, provided that the work is performed using alternative measures that provide effective protection.

[Statutory Authority: RCW 49.17.040. WSR 98-24-096, § 296-307-32001, filed 12/1/98, effective 3/1/99. WSR 97-09-013, recodified as § 296-307-32001, filed 4/7/97, effective 4/7/97. Statutory Authority: RCW 49.17.040, [49.17.]050 and [49.17.]060. WSR 97-08-051A, § 296-306A-32001, filed 3/31/97, effective 5/1/97; WSR 96-22-048, § 296-306A-32001, filed 10/31/96, effective 12/1/96.]

WAC 296-307-32003 When does this section not apply? (1) WAC 296-307-320 does not apply to work on cord and plug connected electric equipment when:

(a) Unexpected energization or start up of the equipment is controlled by unplugging the equipment from the energy source; and

(b) The plug is under the exclusive control of the employee performing the servicing or maintenance.

(2) WAC 296-307-320 does not apply to hot tap operations involving transmission and distribution systems for substances such as gas, steam, water, or petroleum products when they are performed on pressurized pipelines, when:

(a) Continuity of service is essential;

(b) Shutdown of the system is impractical; and

(c) Documented procedures are followed, and special equipment is used that will provide proven effective protection for employees.

(3) WAC 296-307-320 does not cover exposure to electrical hazards from work on, near, or with conductors or equipment in electric utilization installations. These hazards are covered in chapter 296-307 WAC Part T.

[Statutory Authority: RCW 49.17.040. WSR 98-24-096, § 296-307-32003, filed 12/1/98, effective 3/1/99. WSR 97-09-013, recodified as § 296-307-32003, filed 4/7/97, effective 4/7/97. Statutory Authority: RCW 49.17.040, [49.17.]050 and [49.17.]060. WSR 96-22-048, § 296-306A-32003, filed 10/31/96, effective 12/1/96.]

WAC 296-307-32005 What definitions apply to this section? "Affected employee" means an employee who uses a machine or equipment while it is serviced or maintained under lockout or tagout, or who works where such servicing or maintenance is being performed.

"Authorized employee" means a person who locks out or tags out machines or equipment in order to perform servicing or maintenance on that machine or equipment. An affected employee becomes an authorized employee when that employee's duties include performing servicing or maintenance covered under this part.

"Capable of being locked out" means an energy isolating device that has a hasp or other means for a lock to be affixed, or has a locking mechanism built into it. It also means that the device can be locked out without dismantling, rebuilding, or replacing the energy isolating device or permanently altering its energy control capability.

"Energized" means connected to an energy source or containing residual or stored energy.

"Energy isolating device" means a mechanical device that physically prevents the transmission or release of energy, including but not limited to the following:

- A manually operated electrical circuit breaker;
- A disconnect switch;
- A manually operated switch with conductors of circuit that can be disconnected from all ungrounded supply conductors and allows no pole to operate independently;
- A line valve;
- A block; and
- Any similar device used to block or isolate energy.

Push buttons, selector switches, and other control circuit devices are not energy isolating devices.

"Energy source" means any source of electrical, mechanical, hydraulic, pneumatic, chemical, thermal, or other energy, including gravity.

"Hot tap" means a procedure used in repair, maintenance, and service activities that involves welding on a piece

of equipment (pipelines, vessels, or tanks) under pressure, in order to install connections or accessories. It is commonly used to replace or add sections of pipeline without the interruption of service for air, gas, water, steam, and petrochemical distribution systems.

"Lockout" means placing a lockout device on an energy isolating device, in accordance with an established procedure, to ensure that the energy isolating device and the equipment being controlled cannot be operated until the lockout device is removed.

"Lockout device" means a device with a positive means such as a lock (key or combination type) to hold an energy isolating device in the safe position and prevents the energizing of a machine or equipment. Blank flanges and bolted slip blinds are included.

"Normal production operations" means using a machine or equipment for its intended production function.

"Servicing and/or maintenance" means workplace activities such as constructing, installing, setting up, adjusting, inspecting, modifying, and maintaining and/or servicing machines or equipment. These activities include lubrication, cleaning, or unjamming of machines or equipment and making adjustments or tool changes, where the employee may be exposed to the unexpected energization or start up of the equipment or release of hazardous energy.

"Setting up" means any work performed to prepare a machine or equipment to perform its normal production operation.

"Tagout" means placing a tagout device on an energy isolating device, according to an established procedure, to indicate that the energy isolating device and the equipment being controlled must not be operated until the tagout device is removed.

"Tagout device" means a prominent warning device, such as a tag and attachment, that can be securely fastened to an energy isolating device according to an established procedure, to indicate that the energy isolating device and the equipment being controlled must not be operated until the tagout device is removed.

[WSR 97-09-013, recodified as § 296-307-32005, filed 4/7/97, effective 4/7/97. Statutory Authority: RCW 49.17.040, [49.17.]050 and [49.17.]060. WSR 96-22-048, § 296-306A-32005, filed 10/31/96, effective 12/1/96.]

WAC 296-307-32007 What are the required elements of an energy control program? You must establish a written energy control program consisting of:

- An energy control procedure;
- Employee training; and
- Periodic inspections.

The purpose of the program is to ensure that before any employee services or maintains a machine or equipment where the unexpected energizing, start up, or release of stored energy could occur and cause injury, the machine or equipment is isolated from the energy source, and rendered inoperative.

[WSR 97-09-013, recodified as § 296-307-32007, filed 4/7/97, effective 4/7/97. Statutory Authority: RCW 49.17.040, [49.17.]050 and [49.17.]060. WSR 96-22-048, § 296-306A-32007, filed 10/31/96, effective 12/1/96.]

WAC 296-307-32009 How does an employer determine when to use lockout vs. tagout? (1) If an energy isolating device is not capable of being locked out, your energy control program must use a tagout system.

(2) If an energy isolating device is capable of being locked out, your energy control program must use lockout unless a tagout system will provide full employee protection according to WAC 296-307-32011.

(3) Whenever major replacement or major repair, renovation, or modification of a machine or equipment is performed, and whenever new machines or equipment are installed, energy isolating devices for such machines or equipment must be designed to accept a lockout device.

[Statutory Authority: RCW 49.17.040. WSR 98-24-096, § 296-307-32009, filed 12/1/98, effective 3/1/99. WSR 97-09-013, recodified as § 296-307-32009, filed 4/7/97, effective 4/7/97. Statutory Authority: RCW 49.17.040, [49.17.]050 and [49.17.]060. WSR 96-22-048, § 296-306A-32009, filed 10/31/96, effective 12/1/96.]

WAC 296-307-32011 What requirements must be met to substitute tagout for lockout? (1) You must ensure that when a tagout device is used on an energy isolating device that is capable of being locked out, the tagout device is attached at the same location that the lockout device would have been attached. You must also ensure that the tagout program will provide safety that is equivalent to a lockout program.

(2) To demonstrate that a tagout program provides safety that is equivalent to a lockout program, you must demonstrate full compliance with all tagout requirements and any other measures necessary to provide equivalent safety. Other measures include:

(a) Implementing additional safety measures such as the removal of an isolating circuit element;

(b) Blocking a controlling switch;

(c) Opening an extra disconnecting device; or

(d) Removing a valve handle to reduce the likelihood of inadvertent energization.

[WSR 97-09-013, recodified as § 296-307-32011, filed 4/7/97, effective 4/7/97. Statutory Authority: RCW 49.17.040, [49.17.]050 and [49.17.]060. WSR 96-22-048, § 296-306A-32011, filed 10/31/96, effective 12/1/96.]

WAC 296-307-32013 What are the required elements of energy control procedures? (1) You must develop, document, and use procedures to control potentially hazardous energy when employees are engaged in activities covered by this section.

Exception: You are exempt from documenting procedures for a particular machine or equipment only when all of the following elements exist:

(a) The machine or equipment has no potential for stored or residual energy or reaccumulation of stored energy after shut down that could endanger employees;

(b) The machine or equipment has a single energy source that can be readily identified and isolated;

(c) The isolation and locking out of that energy source will completely deenergize and deactivate the machine or equipment;

(d) The machine or equipment is isolated from that energy source and locked out during servicing or maintenance;

(e) A single lockout device will achieve lockout;

(f) The lockout device is under the exclusive control of the authorized employee performing the servicing or maintenance;

(g) The servicing or maintenance does not create hazards for other employees; and

(h) The worksite has experienced no accidents involving the unexpected activation or reenergization of the machine or equipment during servicing or maintenance.

(2) The procedures must clearly and specifically outline the scope, purpose, authorization, rules, and techniques for the control of hazardous energy, and the means to enforce compliance including, but not limited to, the following:

(a) A specific statement of the intended use of the procedure;

(b) Specific procedural steps for shutting down, isolating, blocking, and securing machines or equipment to control hazardous energy;

(c) Specific procedural steps for the placement, removal, and transfer of lockout devices or tagout devices and the responsibility for them; and

(d) Specific requirements for testing a machine or equipment to determine and verify the effectiveness of lockout devices, tagout devices, and other energy control measures.

[WSR 97-09-013, recodified as § 296-307-32013, filed 4/7/97, effective 4/7/97. Statutory Authority: RCW 49.17.040, [49.17.]050 and [49.17.]060. WSR 96-22-048, § 296-306A-32013, filed 10/31/96, effective 12/1/96.]

WAC 296-307-32015 What requirements apply to lockout and tagout devices and materials? (1) You must provide locks, tags, chains, wedges, key blocks, adapter pins, self-locking fasteners, or other hardware for isolating, securing, or blocking machines or equipment from energy sources.

(2) Lockout and tagout devices must be singularly identified; must be the only device(s) used for controlling energy; must not be used for other purposes.

(3) Lockout and tagout devices must be durable and meet the following requirements:

(a) Lockout and tagout devices must be able to withstand the environment to which they are exposed for the maximum period of time that exposure is expected.

(b) Tagout devices must be constructed and printed so that exposure to weather conditions or wet and damp locations will not deteriorate the tag or make the tag's message illegible.

(c) Tags must not deteriorate when used in corrosive environments such as areas where acid and alkali chemicals are handled and stored.

(4) Lockout and tagout devices must be the same within the facility in at least color, shape, or size. Also, tagout devices must have the same print and format.

(5) Lockout and tagout devices must be substantial and meet the following requirements:

(a) Lockout devices must be substantial enough to prevent removal without the use of excessive force or unusual techniques, such as with the use of bolt cutters or other metal cutting tools.

(b) Tagout devices and their means of attachment must be substantial enough to prevent accidental removal. Tagout device attachment means must be single-use, attachable by hand, self-locking, releasable with an unlocking strength of at least 50 pounds, and having the general design and basic characteristics of being at least equivalent to a one-piece, all-environment-tolerant nylon cable tie.

(c) Lockout and tagout devices must indicate the name of employee applying the device(s).

(6) Tagout devices must warn against hazardous conditions if the machine or equipment is energized and must include a message such as: "Do not start," "do not open," "do not close," "do not energize," "do not operate."

[WSR 97-09-013, recodified as § 296-307-32015, filed 4/7/97, effective 4/7/97. Statutory Authority: RCW 49.17.040, [49.17.]050 and [49.17.]060. WSR 96-22-048, § 296-306A-32015, filed 10/31/96, effective 12/1/96.]

WAC 296-307-32017 How often must the energy control procedure be inspected? (1) You must conduct an inspection of the energy control procedure at least annually to ensure that the procedure and the requirements of this standard are followed.

(a) An authorized employee, other than the one(s) using the energy control procedure, must perform the inspection.

(b) The inspection must be conducted to correct any deviations or inadequacies identified.

(c) Where lockout is used for energy control, the inspection must include a review, between the inspector and each authorized employee, of that employee's responsibilities under the energy control procedure.

(d) Where tagout is used for energy control, the inspection must include a review, between the inspector and each authorized and affected employee, of that employee's responsibilities under the energy control procedure, and the elements of WAC 296-307-32021.

(2) You must certify that the inspections have been performed. The certification must identify the machine or equipment on which the energy control procedure was being used, the date of the inspection, the employees included in the inspection, and the person performing the inspection.

[Statutory Authority: RCW 49.17.040. WSR 98-24-096, § 296-307-32017, filed 12/1/98, effective 3/1/99. WSR 97-09-013, recodified as § 296-307-32017, filed 4/7/97, effective 4/7/97. Statutory Authority: RCW 49.17.040, [49.17.]050 and [49.17.]060. WSR 96-22-048, § 296-306A-32017, filed 10/31/96, effective 12/1/96.]

WAC 296-307-32019 What general requirements apply to energy control program training and communication? You must provide training to ensure that employees understand the purpose and function of the energy control program, and that employees have the knowledge and skills required for the safe application, use, and removal of the energy controls. The training must include the following:

(1) Each authorized employee must receive training in the recognition of applicable hazardous energy sources, the type and magnitude of the energy available in the workplace, and the methods and means necessary for energy isolation and control.

(2) Each affected employee must be instructed in the purpose and use of the energy control procedure.

(3) All other employees who work in an area where energy control procedures must be used, must be instructed about the procedure and the prohibition against attempting to restart or reenergize machines or equipment that are locked out or tagged out.

[WSR 97-09-013, recodified as § 296-307-32019, filed 4/7/97, effective 4/7/97. Statutory Authority: RCW 49.17.040, [49.17.]050 and [49.17.]060. WSR 96-22-048, § 296-306A-32019, filed 10/31/96, effective 12/1/96.]

WAC 296-307-32021 What additional requirements apply to tagout training and communication? When tagout systems are used, employees must also be trained in the following limitations of tags:

(1) Tags are warning devices affixed to energy isolating devices, and do not provide the physical restraint on those devices that is provided by a lock.

(2) When a tag is attached to an energy isolating means, it is not to be removed without approval of the authorized person responsible for it, and it is never to be bypassed, ignored, or otherwise defeated.

(3) Tags must be legible and understandable by all authorized, affected, and other employees working in the area.

(4) Tags and their means of attachment must be made of materials that will withstand the environmental conditions encountered in the workplace.

(5) Tags may create a false sense of security, and their meaning needs to be understood as part of the overall energy control program.

(6) Tags must be securely attached to energy isolating devices so that they cannot be accidentally detached during use.

[WSR 97-09-013, recodified as § 296-307-32021, filed 4/7/97, effective 4/7/97. Statutory Authority: RCW 49.17.040, [49.17.]050 and [49.17.]060. WSR 96-22-048, § 296-306A-32021, filed 10/31/96, effective 12/1/96.]

WAC 296-307-32023 What requirements apply to employee retraining? (1) Authorized and affected employees must be retrained whenever there is a change in job assignments, machines, equipment, or processes that present a new hazard, or when there is a change in the energy control procedures.

(2) Additional retraining must also be provided whenever an inspection reveals, or whenever you believe, that the employee's knowledge or use of the energy control procedures is inadequate.

(3) Retraining must reestablish employee proficiency and introduce new or revised control methods and procedures, as necessary.

[WSR 97-09-013, recodified as § 296-307-32023, filed 4/7/97, effective 4/7/97. Statutory Authority: RCW 49.17.040, [49.17.]050 and [49.17.]060. WSR 96-22-048, § 296-306A-32023, filed 10/31/96, effective 12/1/96.]

WAC 296-307-32025 What training records must an employer keep? You must keep records that certify that employee training has been completed and is up to date. The records must contain each employee's name and dates of training.

[WSR 97-09-013, recodified as § 296-307-32025, filed 4/7/97, effective 4/7/97. Statutory Authority: RCW 49.17.040, [49.17.]050 and [49.17.]060. WSR 96-22-048, § 296-306A-32025, filed 10/31/96, effective 12/1/96.]

WAC 296-307-32027 Who may perform lockout or tagout? Lockout or tagout must be performed only by authorized employees performing the service or maintenance.

[WSR 97-09-013, recodified as § 296-307-32027, filed 4/7/97, effective 4/7/97. Statutory Authority: RCW 49.17.040, [49.17.]050 and [49.17.]060. WSR 96-22-048, § 296-306A-32027, filed 10/31/96, effective 12/1/96.]

WAC 296-307-32029 Who must be notified of lockout and tagout? Affected employees must be notified of the application and removal of lockout or tagout devices. Notification must be given before controls are applied and after they are removed.

[WSR 97-09-013, recodified as § 296-307-32029, filed 4/7/97, effective 4/7/97. Statutory Authority: RCW 49.17.040, [49.17.]050 and [49.17.]060. WSR 96-22-048, § 296-306A-32029, filed 10/31/96, effective 12/1/96.]

WAC 296-307-32031 What order of events must lockout or tagout procedures follow? The established lockout or tagout procedures must cover the following elements in the following sequence:

Machinery or equipment shutdown before lockout or tagout:

(1) Before an authorized or affected employee turns off a machine or equipment, the authorized employee must have knowledge of the type and magnitude of the energy, the hazards of the energy to be controlled, and the method or means to control the energy.

(2) The machine or equipment must be turned off or shut down using the procedures established for the machine or equipment. The shutdown must be done in the prescribed order to avoid increased hazards to employees.

(3) All necessary energy isolating devices must be physically located and operated in such a manner as to isolate the machine or equipment from the energy source.

Application of the lockout or tagout device:

(4) Lockout or tagout devices must be affixed to each energy isolating device by authorized employees.

(5) Lockout devices, where used, must be affixed in a manner that will hold the energy isolating devices in a "safe" or "off" position.

(6) Tagout devices, where used, must be affixed in such a manner as will clearly indicate that the operation or movement of energy isolating devices from the "safe" or "off" position is prohibited.

(a) Where tagout devices are used with energy isolating devices designed with the capability of being locked, the tag attachment must be fastened at the same point at which the lock would have been attached.

(b) Where a tag cannot be affixed directly to the energy isolating device, the tag must be located as close as safely possible to the device, in a position that will be immediately obvious to anyone attempting to operate the device.

Eliminating the hazards of stored energy:

(7) After applying lockout or tagout devices to energy isolating devices, all potentially hazardous stored or residual energy must be relieved, disconnected, restrained, and otherwise rendered safe.

(8) If there is a possibility of reaccumulation of stored energy to a hazardous level, verification of isolation must be continued until the servicing or maintenance is completed, or until the possibility of such accumulation no longer exists.

Before beginning service or maintenance:

(9) Prior to starting work on machines or equipment that have been locked out or tagged out, the authorized employee must verify that the machine or equipment has been isolated and deenergized.

[WSR 97-09-013, recodified as § 296-307-32031, filed 4/7/97, effective 4/7/97. Statutory Authority: RCW 49.17.040, [49.17.]050 and [49.17.]060. WSR 96-22-048, § 296-306A-32031, filed 10/31/96, effective 12/1/96.]

WAC 296-307-32033 What order of events must be followed to remove lockout or tagout devices? (1) Before removing lockout or tagout devices, the authorized employee must complete the following procedures:

(a) Inspect the work area to ensure that nonessential items have been removed and to ensure that machine or equipment components are operationally intact.

(b) Check the work area to ensure that all employees have been safely positioned or removed.

(2) After lockout or tagout devices have been removed and before a machine or equipment is started, affected employees must be notified that the lockout or tagout device(s) have been removed.

(3) Each lockout or tagout device must be removed from each energy isolating device by the authorized employee who applied the device.

Exception: When the authorized employee who applied the lockout or tagout device is not available to remove it, that device may be removed under your direction, if specific procedures and training for such removal have been developed, documented, and incorporated into the energy control program.

You must ensure that the specific procedure provides equivalent safety to the removal of the device by the authorized employee who applied it. The specific procedure must include at least the following elements:

(a) Verification by the employer that the authorized employee who applied the device is not at the facility;

(b) Making all reasonable efforts to inform the authorized employee that the lockout or tagout device has been removed; and

(c) Ensuring that the authorized employee has this knowledge before resuming work at that facility.

[WSR 97-09-013, recodified as § 296-307-32033, filed 4/7/97, effective 4/7/97. Statutory Authority: RCW 49.17.040, [49.17.]050 and [49.17.]060. WSR 96-22-048, § 296-306A-32033, filed 10/31/96, effective 12/1/96.]

WAC 296-307-32035 What requirements apply to testing and positioning machines and equipment? When lockout or tagout devices must be temporarily removed from the energy isolating device and the machine or equipment energized to test or position the machine or equipment, the following sequence of actions must be followed:

(1) Clear the machine or equipment of tools and materials according to WAC 296-307-32033 (1)(a).

(2) Remove employees from the machine or equipment area according to WAC 296-307-32033 (1)(b).

(3) Remove the lockout or tagout devices as specified in WAC 296-307-32033(3).

(4) Energize and proceed with testing or positioning.

(5) Deenergize all systems and reapply energy control measures in accordance with WAC 296-307-32031 to continue the servicing and/or maintenance.

[Statutory Authority: RCW 49.17.040. WSR 98-24-096, § 296-307-32035, filed 12/1/98, effective 3/1/99. WSR 97-09-013, recodified as § 296-307-32035, filed 4/7/97, effective 4/7/97. Statutory Authority: RCW 49.17.040, [49.17.]050 and [49.17.]060. WSR 96-22-048, § 296-306A-32035, filed 10/31/96, effective 12/1/96.]

WAC 296-307-32037 What requirements apply to outside servicing contractors? (1) Whenever outside servicing contractors are to be engaged in activities covered by this standard, you and the outside employer must inform each other of your respective lockout or tagout procedures.

(2) The outside employer must ensure that employees understand and comply with the restrictions and prohibitions of your energy control program.

[WSR 97-09-013, recodified as § 296-307-32037, filed 4/7/97, effective 4/7/97. Statutory Authority: RCW 49.17.040, [49.17.]050 and [49.17.]060. WSR 96-22-048, § 296-306A-32037, filed 10/31/96, effective 12/1/96.]

WAC 296-307-32039 What requirements apply to group lockout or tagout? (1) When servicing and/or maintenance is performed by a crew or other group, they must use a procedure that provides a level of protection equivalent to that provided by the implementation of a personal lockout or tagout device.

(2) Group lockout or tagout devices must be used according to the procedures required by WAC 296-307-32013 including, but not limited to, the following:

(a) An authorized employee has primary responsibility for a set number of employees working under the protection of a group lockout or tagout device (such as an operations lock); and

(b) A method for the authorized employee to determine if individual group members are exposed to release of stored energy hazards; and

(c) When more than one crew or group is involved, assignment of overall lockout or tagout control responsibility to an authorized employee designated to coordinate individual group members and ensure continuity of protection; and

(d) Each authorized employee must affix a personal lockout or tagout device to the group lockout device when beginning work, and must remove those devices when the work is complete.

[Statutory Authority: RCW 49.17.040. WSR 98-24-096, § 296-307-32039, filed 12/1/98, effective 3/1/99. WSR 97-09-013, recodified as § 296-307-32039, filed 4/7/97, effective 4/7/97. Statutory Authority: RCW 49.17.040, [49.17.]050 and [49.17.]060. WSR 96-22-048, § 296-306A-32039, filed 10/31/96, effective 12/1/96.]

WAC 296-307-32041 What requirements apply to lockout/tagout during shift changes? During shift or personnel changes, you must ensure that employees follow specific procedures to ensure the continuity of lockout or tagout protection. The procedures must include orderly transfer of lockout or tagout protection between off-going and oncoming employees, to minimize exposure to hazards from the unexpected energization or start up of the machine or equipment, or release of stored energy.

[WSR 97-09-013, recodified as § 296-307-32041, filed 4/7/97, effective 4/7/97. Statutory Authority: RCW 49.17.040, [49.17.]050 and [49.17.]060. WSR 96-22-048, § 296-306A-32041, filed 10/31/96, effective 12/1/96.]

Part R

Safety Color Coding; Accident Prevention Signs and Tags

WAC 296-307-330 Safety color coding; accident prevention signs and tags.

[WSR 97-09-013, recodified as § 296-307-330, filed 4/7/97, effective 4/7/97. Statutory Authority: RCW 49.17.040, [49.17.]050 and [49.17.]060. WSR 96-22-048, § 296-306A-330, filed 10/31/96, effective 12/1/96.]

WAC 296-307-33001 What definitions apply to this section? "Accident prevention sign" ("sign") means a surface with text or pictographs, meant to warn or instruct employees who may be exposed to hazards. Safety posters and education bulletins are not included in this definition.

"Accident prevention tag" ("tag") means a card that identifies a hazardous condition, generally related to unsafe equipment.

"Major message" means the sign's or tag's text that is more specific than the signal word and that identifies the specific hazardous condition or safety instruction. Examples include: "High Voltage," "Close Clearance," "Do Not Start," or "Do Not Use" or a corresponding pictograph.

"Pictograph" means a pictorial representation that identifies a specific hazardous condition or safety instruction.

"Signal word" means the sign's or tag's text that contains the word, usually "danger" or "caution" that is intended to capture the employee's immediate attention.

[WSR 97-09-013, recodified as § 296-307-33001, filed 4/7/97, effective 4/7/97. Statutory Authority: RCW 49.17.040, [49.17.]050 and [49.17.]060. WSR 96-22-048, § 296-306A-33001, filed 10/31/96, effective 12/1/96.]

WAC 296-307-33003 What does red identify in safety color coding? Use red to identify:

(1) Fire protection equipment;

(2) Safety cans or other portable containers of flammable liquids;

(3) Danger signs and tags;

(4) Emergency stop bars on hazardous machines; and

(5) Stop buttons or electrical switches used to stop machinery in an emergency;

Red lights must be provided at barricades and at temporary obstructions, as specified in ANSI Safety Code for Building Construction, A10.2-1944.

[WSR 97-09-013, recodified as § 296-307-33003, filed 4/7/97, effective 4/7/97. Statutory Authority: RCW 49.17.040, [49.17.]050 and [49.17.]060. WSR 96-22-048, § 296-306A-33003, filed 10/31/96, effective 12/1/96.]

WAC 296-307-33005 What does yellow identify in safety color coding? Use yellow to identify:

(1) Caution signs and tags; and

(2) Physical hazards.

[WSR 97-09-013, recodified as § 296-307-33005, filed 4/7/97, effective 4/7/97. Statutory Authority: RCW 49.17.040, [49.17.]050 and [49.17.]060. WSR 96-22-048, § 296-306A-33005, filed 10/31/96, effective 12/1/96.]

WAC 296-307-33007 When should signs and tags use "danger" versus "caution"? (1) Danger signs and tags.

(a) Use danger signs and tags when an immediate hazard presents a threat of death or serious injury to employees.

(b) Instruct all employees that danger signs and tags indicate immediate danger and that special precautions are necessary.

(2) Caution signs and tags.

(a) Use caution signs and tags to warn against potential hazards or to caution against unsafe practices.

(b) Instruct all employees that caution signs and tags indicate a possible hazard against which proper precaution should be taken.

[WSR 97-09-013, recodified as § 296-307-33007, filed 4/7/97, effective 4/7/97. Statutory Authority: RCW 49.17.040, [49.17.]050 and [49.17.]060. WSR 96-22-048, § 296-306A-33007, filed 10/31/96, effective 12/1/96.]

WAC 296-307-33009 What are the design and color specifications for accident prevention signs? (1) All signs must have rounded or blunt corners and be free from sharp edges. The ends or heads of bolts or other fastening devices must be located so that they do not constitute a hazard.

(2) Danger, caution, directional, informational, exit, and safety instruction signs must comply with the specification of safety colors of the ANSI Z53.1-1971.

[WSR 97-09-013, recodified as § 296-307-33009, filed 4/7/97, effective 4/7/97. Statutory Authority: RCW 49.17.040, [49.17.]050 and [49.17.]060. WSR 96-22-048, § 296-306A-33009, filed 10/31/96, effective 12/1/96.]

WAC 296-307-33011 What are the proper uses of accident prevention tags? (1) Use tags as a temporary means of warning employees of a hazardous condition, especially defective equipment. Tags are not a complete warning method, but should be used until the hazard can be eliminated.

For example: You may use a "do not start" tag on power equipment for a short time until the switch in the system can be locked out; you may use a "defective equipment" tag on a damaged ladder while arrangements are made for the ladder to be taken out of service and repaired.

(2) Use of accident prevention tags.

(a) Use tags as a warning to prevent accidental injury or illness to employees who are exposed to hazardous or potentially hazardous conditions, equipment or operations that are out of the ordinary, unexpected or not readily apparent.

(b) Use tags until the identified hazard is eliminated or the hazardous operation is completed. Tags are not necessary if signs, guarding, or other protection is used.

(c) Place "do not start" tags in a conspicuous location and, if possible, so that they block the starting mechanism that would cause hazardous conditions if the equipment was energized.

(3) General accident prevention tag specifications.

(a) Tags must contain a signal word and a major message. The signal word must be either "danger" or "caution."

(b) The signal word must be readable at least five feet from the hazard.

(c) The signal word and the major message must be understandable to all employees who may be exposed to the identified hazard.

(d) Inform all employees of the meaning of the tags used throughout the workplace and what special precautions are necessary.

(e) Attach tags as closely as is safely possible to the hazard. Attach the tags so as to prevent loss or unintentional removal.

(f) The tag and attachment method must be constructed of material that is not likely to deteriorate.

(4) You may use warning tags to represent a hazard level between "caution" and "danger," instead of the required "caution" tag, if they have a signal word of "warning" and an appropriate major message.

(5) Use "out of order" tags only to indicate that a piece of equipment, machinery, etc., is out of order and that it might present a hazard if used.

[WSR 97-09-013, recodified as § 296-307-33011, filed 4/7/97, effective 4/7/97. Statutory Authority: RCW 49.17.040, [49.17.]050 and [49.17.]060. WSR 96-22-048, § 296-306A-33011, filed 10/31/96, effective 12/1/96.]

Part S

Fire Protection and Ignition Sources; Exit Routes

WAC 296-307-340 Portable fire extinguishers.

[WSR 97-09-013, recodified as § 296-307-340, filed 4/7/97, effective 4/7/97. Statutory Authority: RCW 49.17.040, [49.17.]050 and [49.17.]060. WSR 96-22-048, § 296-306A-340, filed 10/31/96, effective 12/1/96.]

WAC 296-307-34003 What does this section cover? (1) WAC 296-307-340 applies to the placement, use, maintenance, and testing of portable fire extinguishers provided for employee use. WAC 296-307-34012 does not apply to extinguishers provided for employee use on the outside of workplace buildings or structures. If you do not intend for employees to use extinguishers, and your emergency action plan and fire prevention plan meet the requirements of WAC 296-307-35018, then only the requirements of WAC 296-307-34015 and 296-307-34018 apply.

(2) All standpipe and hose systems, automatic sprinkler systems, fixed extinguishing systems, dry-chemical fixed extinguishing systems, water-spray and foam, and fire detection systems, must be installed according to state and local ordinances, codes, and regulations governing such installations.

[Statutory Authority: RCW 49.17.040. WSR 98-24-096, § 296-307-34003, filed 12/1/98, effective 3/1/99. WSR 97-09-013, recodified as § 296-307-34003, filed 4/7/97, effective 4/7/97. Statutory Authority: RCW 49.17.040, [49.17.]050 and [49.17.]060. WSR 96-22-048, § 296-306A-34003, filed 10/31/96, effective 12/1/96.]

WAC 296-307-34006 Who is exempt from the requirements of this section? (1) You are exempt from all requirements of this section, if:

(a) You have implemented a written fire safety policy that requires all employees to evacuate immediately when the fire alarm sounds; and

(b) You have an emergency action plan and a fire prevention plan meeting the requirements of WAC 296-307-35015 and 296-307-35018; and

(c) Extinguishers are not available for employee use in the workplace.

Note: If you are covered by one of the following sections requiring you to provide a portable fire extinguisher, then you may not apply this exemption:

- WAC 296-307-07013(12)—Transporting employees;
- WAC 296-307-34009(8)—Storage of flammables; or
- WAC 296-307-49503(2)—Welding.

(2) You are exempt from the distribution requirements in WAC 296-307-34012, if:

(a) You have an emergency action plan meeting the requirements of WAC 296-307-35015 that authorizes only certain employees to use the available portable fire extinguishers; and

(b) The plan requires all other employees to evacuate immediately when the fire alarm sounds.

[Statutory Authority: RCW 49.17.040. WSR 98-24-096, § 296-307-34006, filed 12/1/98, effective 3/1/99. WSR 97-09-013, recodified as § 296-307-34006, filed 4/7/97, effective 4/7/97. Statutory Authority: RCW 49.17.040, [49.17.]050 and [49.17.]060. WSR 96-22-048, § 296-306A-34006, filed 10/31/96, effective 12/1/96.]

WAC 296-307-34009 What general requirements apply to portable fire extinguishers? (1) You must provide portable fire extinguishers that are readily accessible to employees without subjecting the employees to possible injury.

(2) You must only use approved portable fire extinguishers.

(3) Portable fire extinguishers using carbon tetrachloride or chlorobromomethane extinguishing agents are prohibited.

(4) Water type fire extinguishers with a soldered or riveted shell that use self-generating soda acid or self-generating foam or gas cartridges are prohibited.

(5) You must ensure that all portable fire extinguishers are fully charged, operable, and kept in their designated places at all times except during use.

(6) You must ensure that all portable fire extinguishers are tested, constructed, and used according to the National Fire Protection Association's pamphlet No. 10A-1970.

Note: The supplier of the extinguisher or local fire official can furnish this information.

(7) You must post "no smoking" signs in areas where fire or explosion hazards exist. You must prohibit smoking within fifty feet of all refueling operations. Take precautions to prevent open flames, sparks, or electric arcs in refueling areas.

(8) You must keep a portable fire extinguisher with a rating of at least 12-B units outside the door of any room used to store flammables or combustibles. This extinguisher must not be more than ten feet from the door.

[WSR 97-09-013, recodified as § 296-307-34009, filed 4/7/97, effective 4/7/97. Statutory Authority: RCW 49.17.040, [49.17.]050 and [49.17.]060. WSR 96-22-048, § 296-306A-34009, filed 10/31/96, effective 12/1/96.]

WAC 296-307-34012 How should portable fire extinguishers be selected and distributed? (1) You must select and distribute portable fire extinguishers based on the classes of anticipated workplace fires and on the size and degree of hazard that would affect their use.

(2) Distribution of portable fire extinguishers.

(a) For Class A fires: You must distribute portable fire extinguishers so that no employee must travel more than 75 feet (22.9 m) to a fire extinguisher.

Exception: You may use uniformly spaced standpipe systems or hose stations connected to a sprinkler system for emergency use by employees instead of Class A portable fire extinguishers, if:

- The system meets all regulatory requirements governing total coverage of the area to be protected; and
- Employees are trained at least annually in their use.

(b) For Class B fires: You must distribute portable fire extinguishers so that no employee must travel more than 50 feet (15.2 m) to a fire extinguisher.

(c) For Class C fires: You must distribute portable fire extinguishers on the basis of the appropriate pattern for the existing Class A or Class B hazards.

(d) For Class D fires: You must distribute portable fire extinguishers or other containers of Class D extinguishing agent so no employee must travel more than 75 feet (22.9 m) from the combustible metal working area to any extinguishing agent. Portable fire extinguishers for Class D hazards are required in those combustible metal working areas where combustible metal powders, flakes, shavings, or similarly sized products are generated at least once every two weeks.

[WSR 97-09-013, recodified as § 296-307-34012, filed 4/7/97, effective 4/7/97. Statutory Authority: RCW 49.17.040, [49.17.]050 and [49.17.]060. WSR 96-22-048, § 296-306A-34012, filed 10/31/96, effective 12/1/96.]

WAC 296-307-34015 What are the requirements for inspection, maintenance and testing of portable fire extinguishers? (1) You are responsible for the inspection, maintenance, and testing of all portable fire extinguishers in the workplace.

(2) You must visually inspect portable extinguishers or hose at least once a month.

(3) You must ensure that portable fire extinguishers receive an annual maintenance check. You must keep records of the maintenance dates for one year after the previous entry or the life of the shell, whichever comes first. You must provide us with a copy of the record if we ask for it.

(4) You must ensure that stored-pressure dry chemical extinguishers that require a twelve-year hydrostatic test are emptied and undergo applicable maintenance procedures every six years.

Exception: Dry chemical extinguishers with nonrefillable disposable containers are exempt from this requirement.

The six years begins when recharging or hydrostatic testing is performed.

(5) You must ensure that alternate equivalent protection is provided when portable fire extinguishers are removed from service for maintenance and recharging.

[WSR 97-09-013, recodified as § 296-307-34015, filed 4/7/97, effective 4/7/97. Statutory Authority: RCW 49.17.040, [49.17.]050 and [49.17.]060. WSR 96-22-048, § 296-306A-34015, filed 10/31/96, effective 12/1/96.]

WAC 296-307-34018 What requirements apply to hydrostatic testing? (1) You must ensure that a trained person performs hydrostatic testing with suitable testing equipment and facilities.

(2) You must ensure that portable extinguishers are hydrostatically tested at the intervals listed in the table below.

Type of Extinguishers	Test interval (years)
Soda acid (stainless steel shell)	5
Cartridge operated water and/or antifreeze	5
Stored pressure water and/or antifreeze	5
Wetting agent	5
Foam (stainless steel shell)	5
Aqueous film forming form (AFFF)	5
Loaded stream	5
Dry chemical with stainless steel	5
Carbon dioxide	5
Dry chemical, stored pressure, with mild steel, brazed brass or aluminum shells	12
Dry chemical, cartridge or cylinder operated, with mild steel shells	12
Halon 1211	12
Halon 1301	12
Dry powder, cartridge or cylinder operated, with mild steel shell	12

Exception: Extinguishers must not be hydrostatically tested if the following conditions exist:

(a) When the unit has been repaired by soldering, welding, brazing, or use of patching compounds;

(b) When the cylinder or shell threads are damaged;

(c) When there is corrosion that has caused pitting, including corrosion under removable name plate assemblies;

(d) When the extinguisher has been burned in a fire; or

(e) When a calcium chloride extinguishing agent has been used in a stainless steel shell.

(3) In addition to an external visual examination, you must ensure that the cylinders and shells are examined internally before the hydrostatic testing.

(4) You must ensure that portable fire extinguishers are hydrostatically tested whenever they show new evidence of corrosion or mechanical injury.

(5) You must ensure that hydrostatic tests are performed on extinguisher hose assemblies that are equipped with a shut-off nozzle at the discharge end of the hose. The test interval must be the same as specified for the extinguisher on which the hose is installed.

(6) Carbon dioxide hose assemblies with a shut-off nozzle must be hydrostatically tested at 1,250 psi (8,620 kPa).

(7) Dry chemical and dry powder hose assemblies with a shut-off nozzle must be hydrostatically tested at 300 psi (2,070 kPa).

(8) Hose assemblies passing a hydrostatic test do not require any type of recording or stamping.

(9) You must ensure that hose assemblies for carbon dioxide extinguishers that require a hydrostatic test are tested within a protective cage device.

(10) You must ensure that carbon dioxide extinguishers and nitrogen or carbon dioxide cylinders used with wheeled extinguishers are tested every five years at 5/3 of the service pressure as stamped into the cylinder. Nitrogen cylinders that comply with 29 C.F.R. 173.34(e)(15) may be hydrostatically tested every ten years.

(11) You must ensure that all stored pressure and Halon 1211 types of extinguishers are hydrostatically tested at the

factory test pressure not to exceed two times the service pressure.

(12) You must ensure that self-generating type soda acid and foam extinguishers are tested at 350 psi (2,410 kPa).

(13) Air or gas pressure used for hydrostatic testing is prohibited.

(14) You must remove from the workplace all extinguisher shells, cylinders, or cartridges that fail a hydrostatic pressure test, or that are not fit for testing.

(15)(a) Water-jacket equipment must be used for testing compressed gas type cylinders. The equipment must have an expansion indicator that operates with an accuracy within one percent of the total expansion or 0.1 cc (.1 mL) of liquid.

(b) The following equipment must be used to test non-compressed gas type cylinders:

(i) A hydrostatic test pump, hand or power operated, capable of producing not less than one hundred fifty percent of the test pressure, which must include appropriate check valves and fittings;

(ii) A flexible connection for attachment to fittings to test through the extinguisher nozzle, test bonnet, or hose outlet, as is applicable; and

(iii) A protective cage or barrier for personal protection of the tester, designed to provide visual observation of the extinguisher under test.

(16) You must maintain records of the hydrostatic testing. Your records must include:

- The date of test;
- The test pressure used;
- The serial number, or other identifier of the fire extinguisher that was tested; and
- The person or agency performing the test.

You must keep the records until the next testing, or until the extinguisher is taken out of service, whichever comes first. You must provide us with copies of the records if we ask for them.

[WSR 97-09-013, recodified as § 296-307-34018, filed 4/7/97, effective 4/7/97. Statutory Authority: RCW 49.17.040, [49.17.]050 and [49.17.]060. WSR 96-22-048, § 296-306A-34018, filed 10/31/96, effective 12/1/96.]

WAC 296-307-34021 What are the training requirements for portable fire extinguishers? (1) If you provide portable fire extinguishers for employee use, then you must also provide training to familiarize employees with the general principles of fire extinguisher use and the hazards involved in fighting fires when they first appear.

You must provide the training when the employee is first hired and at least annually thereafter.

(2) For employees who have been designated to use fire-fighting equipment as part of an emergency action plan, you must provide training in the use of the appropriate equipment.

You must provide the training upon initial assignment to the designated group of employees and at least annually thereafter.

[WSR 97-09-013, recodified as § 296-307-34021, filed 4/7/97, effective 4/7/97. Statutory Authority: RCW 49.17.040, [49.17.]050 and [49.17.]060. WSR 96-22-048, § 296-306A-34021, filed 10/31/96, effective 12/1/96.]

WAC 296-307-345 Employee alarm systems.

[WSR 97-09-013, recodified as § 296-307-345, filed 4/7/97, effective 4/7/97. Statutory Authority: RCW 49.17.040, [49.17.]050 and [49.17.]060. WSR 96-22-048, § 296-306A-345, filed 10/31/96, effective 12/1/96.]

WAC 296-307-34503 What does this section cover? (1) WAC 296-307-345 applies to all emergency employee alarms required by a specific WAC chapter. This section does not apply to discharge or supervisory alarms required on various fixed extinguishing systems or to supervisory alarms on fire suppression, alarm or detection systems unless they are intended to be employee alarm systems.

(2) The maintenance, testing, and inspection requirements of this section apply to all local fire alarm signaling systems used for alerting employees regardless of the other functions of the system.

(3) All predischarge employee alarms required by this chapter must meet the requirements of WAC 296-307-34506 and 296-307-34512.

[Statutory Authority: RCW 49.17.040. WSR 98-24-096, § 296-307-34503, filed 12/1/98, effective 3/1/99. WSR 97-09-013, recodified as § 296-307-34503, filed 4/7/97, effective 4/7/97. Statutory Authority: RCW 49.17.040, [49.17.]050 and [49.17.]060. WSR 96-22-048, § 296-306A-34503, filed 10/31/96, effective 12/1/96.]

WAC 296-307-34506 What general requirements apply to employee alarm systems? (1) Your employee alarm system must provide warning for necessary emergency action called for in the emergency action plan, or safe escape of employees from the workplace.

(2) You must ensure that all employees can see or hear your employee alarm above normal noise or light levels in the workplace. You may use tactile devices to alert employees who can not see or hear the alarm.

(3) You must ensure that your employee alarm is recognizable as an evacuation signal or signal to perform actions designated under the emergency action plan.

(4) You must explain to each employee how to report emergencies. For example: They may use manual pull box alarms, public address systems, radio or telephones. You must post emergency telephone numbers near telephones, or employee notice boards when telephones serve as a means of reporting emergencies. When your communication system also serves as the employee alarm system, you must ensure that all emergency messages have priority over all nonemergency messages.

(5) You must establish procedures for sounding emergency alarms in the workplace. If you have ten or fewer employees in a workplace, direct voice communication is an acceptable procedure for sounding the alarm if all employees can hear it. In this case, you do not need a back-up system.

[WSR 97-09-013, recodified as § 296-307-34506, filed 4/7/97, effective 4/7/97. Statutory Authority: RCW 49.17.040, [49.17.]050 and [49.17.]060. WSR 96-22-048, § 296-306A-34506, filed 10/31/96, effective 12/1/96.]

WAC 296-307-34509 What are the installation and restoration requirements for employee alarm systems? (1) You must ensure that all systems installed to comply with this standard are approved. Steam whistles, air horns, strobe lights or similar lighting devices, or tactile devices meeting the requirements of this section must also be approved.

(2) After each test or alarm, you must ensure that all employee alarm systems are restored to normal operating condition as soon as possible. You must ensure that you have spare alarm components available in sufficient quantities and locations for prompt restoration of the system.

[WSR 97-09-013, recodified as § 296-307-34509, filed 4/7/97, effective 4/7/97. Statutory Authority: RCW 49.17.040, [49.17.]050 and [49.17.]060. WSR 96-22-048, § 296-306A-34509, filed 10/31/96, effective 12/1/96.]

WAC 296-307-34512 How must employee alarm systems be maintained and tested? (1) You must ensure that all employee alarm systems are maintained in operating condition except when undergoing repairs or maintenance.

(2) You must ensure that a test of the reliability and adequacy of nonsupervised employee alarm systems is made every two months. You must use a different actuation device in each test of a multiactuation device system so that no individual device is used for two consecutive tests.

(3) You must maintain or replace power supplies as often as necessary to ensure fully operational condition. You must provide back-up alarms, such as employee runners or telephones, when systems are out of service.

(4) You must ensure that supervised employee alarm circuitry is supervised and that it will provide positive notification to assigned personnel whenever a deficiency exists in the system. You must ensure that all supervised employee alarm systems are tested at least annually for reliability and adequacy.

(5) You must ensure that employee alarms are serviced, maintained, and tested by someone trained in the operation and functions necessary for reliable and safe operation of the system.

[WSR 97-09-013, recodified as § 296-307-34512, filed 4/7/97, effective 4/7/97. Statutory Authority: RCW 49.17.040, [49.17.]050 and [49.17.]060. WSR 96-22-048, § 296-306A-34512, filed 10/31/96, effective 12/1/96.]

WAC 296-307-34515 Where must manually operated devices be located? You must ensure that manually operated actuation devices used with employee alarms are easy to find and accessible.

[WSR 97-09-013, recodified as § 296-307-34515, filed 4/7/97, effective 4/7/97. Statutory Authority: RCW 49.17.040, [49.17.]050 and [49.17.]060. WSR 96-22-048, § 296-306A-34515, filed 10/31/96, effective 12/1/96.]

WAC 296-307-350 Exit routes.

[WSR 97-09-013, recodified as § 296-307-350, filed 4/7/97, effective 4/7/97. Statutory Authority: RCW 49.17.040, [49.17.]050 and [49.17.]060. WSR 96-22-048, § 296-306A-350, filed 10/31/96, effective 12/1/96.]

WAC 296-307-35003 What does this section cover? WAC 296-307-350 requires you to provide exit routes for employees to leave the workplace safely during emergencies. This section does not apply to mobile workplaces, such as vehicles or vessels.

[Statutory Authority: RCW 49.17.040. WSR 98-24-096, § 296-307-35003, filed 12/1/98, effective 3/1/99. WSR 97-09-013, recodified as § 296-307-35003, filed 4/7/97, effective 4/7/97. Statutory Authority: RCW 49.17.040, [49.17.]050 and [49.17.]060. WSR 96-22-048, § 296-306A-35003, filed 10/31/96, effective 12/1/96.]

WAC 296-307-35006 What definitions apply to this section? "Exit" means the portion of an exit route that is generally separated from other areas to provide a protected way of travel out of the workplace.

"Exit route" means a continuous and unobstructed path of exit travel from any point within a workplace to safety outside. An exit route generally consists of three parts: Access to an exit; the area which provides a way of travel out of the workplace; and the way from the exit to the outside. An exit route includes all vertical and horizontal areas.

[WSR 97-09-013, recodified as § 296-307-35006, filed 4/7/97, effective 4/7/97. Statutory Authority: RCW 49.17.040, [49.17.]050 and [49.17.]060. WSR 96-22-048, § 296-306A-35006, filed 10/31/96, effective 12/1/96.]

WAC 296-307-35009 What are the design requirements for exit routes? You must ensure that each workplace meets each of the following requirements:

(1) Each exit is a permanent part of the workplace.

(2) Two exit routes, remote from one another, are available to provide alternate means for employees to safely leave the workplace during an emergency.

(a) A single exit route is permitted where the number of employees, the size of the building, its occupancy, or the arrangement of the workplace indicate that a single exit will allow all employees to exit safely during an emergency. Other means of escape, such as fire exits or accessible windows, should be available where fewer than two exit routes are provided.

(b) More than two exit routes are available to allow employees to safely leave the workplace during an emergency where the number of employees, the size of the building, its occupancy, or the arrangement of the workplace reasonably suggest that reliance on two exit routes could endanger employees.

(3) An exit has only those openings necessary to permit access to, or exit from, occupied areas of the workplace. An opening into an exit is protected by a self-closing fire door that remains closed. Each fire door, its frame, and hardware are listed or approved by a nationally recognized testing laboratory.

(4) Construction materials used to separate an exit have a 1-hour fire resistance rating if the exit connects three or fewer stories. Construction materials used to separate an exit have a 2-hour fire resistance rating if the exit connects 4 or more stories.

(5) Free and unobstructed access to each exit route is provided to ensure safe exit during an emergency.

(a) The exit route is free of material or equipment.

(b) Employees are not required to travel through a room that can be locked, such as a bathroom, or toward a dead end to reach an exit.

(c) Stairs or a ramp are used if the exit route is not substantially level.

(6) An exit leads directly outside or to a street, walkway, refuge area, or to an open space with access to the outside.

(a) The street, walkway, refuge area, or open space to which an exit leads is large enough to accommodate all building occupants likely to use that exit.

(b) A refuge area is:

(i) A space along an exit route protected from the effects of fire either by separation from other spaces within the building or by its location; or

(ii) A floor with at least two spaces separated by smoke-resistant partitions, in a building where each floor is protected by an automatic sprinkler system. An automatic sprinkler system complies with NFPA No. 13, Automatic Sprinkler Systems.

(c) Exit stairs that continue beyond the floor of exit discharge are interrupted by doors, partitions, or other effective means.

(7) Where a doorway or corner of a building is located near a railroad or trolley track so that an employee is liable to walk upon the track in front of an approaching engine or cars, a standard safeguard must be installed with a warning sign.

(8) An exit door can be readily opened from the inside without keys, tools, or special knowledge. A device, such as a panic bar, that locks only from the outside is permitted. An exit door is free of any device or alarm that, if it fails, can restrict emergency use of an exit.

Note: An exit door may be locked or blocked from the inside in a mental, penal, or correctional institution, if supervisory personnel are continually on duty and a plan exists to remove occupants during an emergency.

(9) The opening device on all doors of walk-in refrigerated or freezer rooms must be the type, when locked from the outside with a lock, can be opened from inside.

(10) A side-hinged exit door is used to connect any room to an exit route. A door that connects any room to an exit route swings out if the room may be occupied by more than 50 persons or highly flammable or explosive materials may be used inside.

(11) Each exit route supports the maximum-permitted occupant load for each floor served by the exit route. The capacity of an exit does not decrease with the direction of exit travel.

(12) Minimum height and width requirements:

(a) Make sure the exit route has a minimum ceiling height of 7 feet 6 inches and that no projection from the ceiling is less than 6 feet 8 inches from the floor.

(b) Objects that stick out into the exit route, such as fans hanging from the ceilings or cabinets on walls, must not reduce the minimum height of the exit route to less than 6 feet 8 inches from the floor.

(c) The width of an exit route is at least 28 inches wide at all points between handrails. An exit route is wider than 28 inches if necessary to accommodate the expected occupant load.

(d) Objects that project into the exit route do not reduce the minimum height and width of an exit route.

(13) An outdoor exit route is permitted if it meets the requirements for an indoor exit route and the following additional requirements.

(a) The exit has guardrails to protect exposed sides.

(b) The exit route is covered if accumulation of snow or ice is likely and is not removed regularly.

(c) The exit route is reasonably straight with smooth, solid, substantially level floors.

(d) The exit route has no dead ends longer than 20 feet.

[Statutory Authority: RCW 49.17.010, 49.17.040, 49.17.050, 49.17.060, and chapter 49.17 RCW. WSR 11-04-080, § 296-307-35009, filed 2/1/11, effective 4/1/11. WSR 97-09-013, recodified as § 296-307-35009, filed 4/7/97, effective 4/7/97. Statutory Authority: RCW 49.17.040, [49.17.]050 and [49.17.]060. WSR 96-22-048, § 296-306A-35009, filed 10/31/96, effective 12/1/96.]

WAC 296-307-35012 What are the operation and maintenance requirements for exit routes? You must ensure that each workplace meets the following requirements:

(1) The workplace exit route is maintained to minimize danger to employees during an emergency.

(a) The workplace exit route is free of explosive or highly flammable furnishings or decorations.

(b) Accumulations of flammable or combustible waste materials are controlled.

(c) An exit route does not require employees to travel toward materials that burn very quickly, emit poisonous fumes, or are explosive, unless those materials are effectively shielded from the exit route.

(2) Each exit route is adequately lit.

(3) Each exit is clearly visible and is marked by a distinctive sign reading "exit."

(a) An exit door is free of signs or decorations that obscure its visibility.

(b) Signs are posted along the exit route indicating the direction of travel to the nearest exit.

(c) The line-of-sight to an exit sign is uninterrupted.

(d) Any doorway or passage that might be mistaken for an exit is marked "not an exit" or with an indication of its actual use.

(e) An exit sign is illuminated to a surface value of at least 5 foot candles by a reliable light source and shows a designated color. Self-luminous or electroluminescent signs have a minimum luminance surface value of .06 footlamberts.

(4) Fire retardant paints or other coatings used in the workplace are maintained.

(5) Each safeguard to protect employees during an emergency is maintained in proper working order.

(6) Employees do not occupy a workplace under construction until an exit route that meets these requirements is available for the portion of the workplace to be occupied.

(a) Employees do not occupy a workplace during repair or alteration unless either all exits and existing fire protection are maintained or alternate fire protection is provided that ensures an equivalent level of safety.

(b) Flammable or explosive materials used during construction or repair do not expose employees to hazards not otherwise present in the workplace or impede emergency escape from the workplace.

(7) An operable employee alarm system with a distinctive signal to warn employees of fire or other emergencies is installed and maintained. No employee alarm system is required if employees can see or smell a fire or other hazard so that it would provide adequate warning to them. The employee alarm system complies with the requirements of WAC 296-307-345.

[Statutory Authority: RCW 49.17.040. WSR 98-24-096, § 296-307-35012, filed 12/1/98, effective 3/1/99. WSR 97-09-013, recodified as § 296-307-35012, filed 4/7/97, effective 4/7/97. Statutory Authority: RCW 49.17.040, [49.17.]050 and [49.17.]060. WSR 96-22-048, § 296-306A-35012, filed 10/31/96, effective 12/1/96.]

WAC 296-307-35015 What are the requirements for an emergency action plan? (1) You must develop an emergency action plan for each part of the workplace as required by WAC 296-307-030 (3)(d).

(a) The plan must be in writing, kept in the workplace, and made available to employees on request.

(b) An employer of 10 or fewer employees may communicate the plan orally to employees rather than develop a written plan.

(2) An emergency action plan must include:

(a) Procedures for emergency evacuation, including exit route assignments;

(b) Procedures to account for all employees after evacuation;

(c) Procedures for reporting a fire or other emergency;

(d) Procedures to follow for emergency operation or shut down of critical equipment before evacuation;

(e) Procedures to follow for rescue and medical duties;

(f) Procedures for operating and maintaining an emergency alarm system; and

(g) Names or job titles of employees to be contacted to get more information about what to do in an emergency.

(3) You must designate employees to assist in the safe emergency evacuation of other employees. You must ensure that the designated employees receive training in emergency evacuation procedures.

(4) You must review the emergency action plan with each employee covered by the plan:

(a) When the plan is developed or the employee is assigned initially to the job;

(b) When the employee's responsibilities under the plan change; and

(c) When the plan is changed.

[Statutory Authority: RCW 49.17.040. WSR 98-24-096, § 296-307-35015, filed 12/1/98, effective 3/1/99. WSR 97-09-013, recodified as § 296-307-35015, filed 4/7/97, effective 4/7/97. Statutory Authority: RCW 49.17.040, [49.17.]050 and [49.17.]060. WSR 96-22-048, § 296-306A-35015, filed 10/31/96, effective 12/1/96.]

WAC 296-307-35018 What are the requirements for a fire prevention plan? (1) You must develop a fire prevention plan for each part of the workplace if required by WAC 296-307-34006(1).

(a) The plan must be in writing, kept in the workplace, and made available to employees on request.

(b) An employer of ten or fewer employees may communicate the plan orally to employees rather than develop a written plan.

(2) A fire prevention plan must include:

(a) A list of all major fire hazards, including proper handling and storage procedures for hazardous materials, potential ignition sources and their control, and the type of fire protection equipment necessary to control each major hazard;

(b) Procedures to control accumulations of flammable and combustible waste materials;

(c) Procedures for regular maintenance of safeguards installed on heat producing equipment to prevent accidental ignition of combustible materials;

(d) Names or job titles of employees responsible for maintaining equipment to prevent or control sources of ignition or fires;

(e) Names or job titles of employees responsible for control of fuel source hazards.

(3) You must:

(a) Inform employees of the fire hazards to which they are exposed; and

(b) Review with each employee those parts of the fire prevention plan necessary for self-protection upon initial assignment to a job.

[Statutory Authority: RCW 49.17.040. WSR 98-24-096, § 296-307-35018, filed 12/1/98, effective 3/1/99. WSR 97-09-013, recodified as § 296-307-35018, filed 4/7/97, effective 4/7/97. Statutory Authority: RCW 49.17.040, [49.17.]050 and [49.17.]060. WSR 96-22-048, § 296-306A-35018, filed 10/31/96, effective 12/1/96.]

Part T

Electrical

WAC 296-307-360 Electrical.

[WSR 97-09-013, recodified as § 296-307-360, filed 4/7/97, effective 4/7/97. Statutory Authority: RCW 49.17.040, [49.17.]050 and [49.17.]060. WSR 96-22-048, § 296-306A-360, filed 10/31/96, effective 12/1/96.]

WAC 296-307-36005 What does this part cover? (1) Chapter 296-307 WAC Part T covers methods to protect against electrical hazards in agricultural workplaces.

(2) Chapter 296-307 WAC Part T does not cover:

- Installations in watercraft, or automotive vehicles; or
- Electric welding. (See chapter 296-307 WAC Part V.)

(3) Unless otherwise provided in this chapter all electrical work, installation, and wire capacities must be according to the National Electrical Code, NFPA 70-1973; ANSI C1-1971, and all other applicable standards administered by the department of labor and industries.

[Statutory Authority: RCW 49.17.040. WSR 98-24-096, § 296-307-36005, filed 12/1/98, effective 3/1/99. WSR 97-09-013, recodified as § 296-307-36005, filed 4/7/97, effective 4/7/97. Statutory Authority: RCW 49.17.040, [49.17.]050 and [49.17.]060. WSR 96-22-048, § 296-306A-36005, filed 10/31/96, effective 12/1/96.]

WAC 296-307-36010 What definitions apply to this part? The following definitions apply to this part:

"Acceptable" means an installation or equipment that is acceptable to the department and meets the requirements of this section. An installation or equipment is acceptable if:

(1) It is accepted, certified, listed, labeled, or otherwise determined to be safe by a nationally recognized testing laboratory; or

(2) For installations or equipment that no nationally recognized testing laboratory accepts, certifies, lists, labels, or determines to be safe, it is inspected or tested by another federal agency, or by state, municipal, or other local authority responsible for enforcing occupational safety provisions of the National Electrical Code, and complies with the provisions of the National Electrical Code, and complies with the provisions of the National Electrical Code as applied in this section; or

(3) For custom-made equipment or related installations that are designed, fabricated for, and intended for use by a particular customer, it is determined to be safe for its intended use by its manufacturer on the basis of test data that you keep and make available for our inspection.

"Accepted" means an installation that has been inspected and certified by a nationally recognized testing laboratory to meet specified plans or procedures of applicable codes.

"Bonding jumper" means a reliable conductor that provides the correct electrical conductivity between metal parts that are required to be electrically connected.

"Branch circuits" means the part of a wiring system extending beyond the final overcurrent device protecting the circuit. A device not approved for branch circuit protection, such as thermal cutout or motor overload protective device, is not considered as the overcurrent device protecting the circuit.

"Certified" means equipment that:

• Has been tested and found by a nationally recognized testing laboratory to meet nationally recognized standards, or to be safe for use in a specified manner; or

• Is a kind whose production is periodically inspected by a nationally recognized testing laboratory; and

• Bears a label, tag, or other record of certification.

"Exposed" means a live part that can be accidentally touched or approached nearer than a safe distance. This term applies to parts that are not suitably guarded, isolated, or insulated.

"Fixed equipment" means equipment fastened or connected by permanent wiring methods.

"Ground" means a conducting connection, whether intentional or accidental, between an electrical circuit or equipment and earth, or to some conducting body that serves in place of the earth.

"Grounded" means connected to earth or to some conducting body that serves in place of the earth.

"Isolated" means equipment that is not readily accessible except through special means of access.

"Labeled" means equipment that has an attached label, symbol, or other identifying mark of a nationally recognized testing laboratory that:

• Makes periodic inspections of the production of such equipment; and

• Whose labeling indicates compliance with nationally recognized standards or tests to determine safe use in a specified manner.

"Qualified person" means a person who is familiar with the construction and operation of the equipment and the hazards involved.

Note 1: Whether an employee is considered a "qualified person" depends on various circumstances in the workplace. It is possible and likely for an individual to be considered "qualified" with regard to certain equipment in the workplace, but "unqualified" as to other equipment.

Note 2: An employee undergoing on-the-job training and who, in the course of such training, has demonstrated an ability to perform duties safely at his or her level of training and who is under the direct supervision of a qualified person is considered a qualified person for the performance of those duties.

"Shock hazard" exists at an accessible part in a circuit between the part and ground, or other accessible parts if the potential is more than 42.4 volts peak and the current through a 1,500 ohm load is more than 5 milliamperes.

"Weatherproof" means constructed or protected so that exposure to the weather does not interfere with successful operation. Rainproof, raintight, or watertight equipment may be considered weatherproof where weather conditions other than wetness, such as snow, ice, dust, or temperature extremes, are not a factor.

[WSR 97-09-013, recodified as § 296-307-36010, filed 4/7/97, effective 4/7/97. Statutory Authority: RCW 49.17.040, [49.17.]050 and [49.17.]060. WSR 96-22-048, § 296-306A-36010, filed 10/31/96, effective 12/1/96.]

WAC 296-307-362 General electrical requirements.

[WSR 97-09-013, recodified as § 296-307-362, filed 4/7/97, effective 4/7/97. Statutory Authority: RCW 49.17.040, [49.17.]050 and [49.17.]060. WSR 96-22-048, § 296-306A-362, filed 10/31/96, effective 12/1/96.]

WAC 296-307-36203 What electrical equipment must be approved? The conductors and equipment required or permitted by this section must be approved.

[WSR 97-09-013, recodified as § 296-307-36203, filed 4/7/97, effective 4/7/97. Statutory Authority: RCW 49.17.040, [49.17.]050 and [49.17.]060. WSR 96-22-048, § 296-306A-36203, filed 10/31/96, effective 12/1/96.]

WAC 296-307-36206 How must electrical equipment safety be determined? (1) Electrical equipment must be free from hazards to employees. Safety of equipment must be determined using the following considerations:

(a) Suitability for installation and use according to the requirements of this part. Suitability of equipment for a specific purpose may be shown by listing or labeling for that purpose.

(b) Mechanical strength and durability, including, for parts designed to enclose and protect other equipment, the adequacy of the protection provided.

(c) Electrical insulation.

(d) Heating effects under conditions of use.

(e) Arcing effects.

(f) Classification by type, size, voltage, current capacity, specific use.

(g) Other factors that contribute to the practical safeguarding of employees using or likely to come in contact with the equipment.

(2) Listed or labeled equipment must be used or installed according to any instructions included in the listing or labeling.

[WSR 97-09-013, recodified as § 296-307-36206, filed 4/7/97, effective 4/7/97. Statutory Authority: RCW 49.17.040, [49.17.]050 and [49.17.]060. WSR 96-22-048, § 296-306A-36206, filed 10/31/96, effective 12/1/96.]

WAC 296-307-36209 What requirements apply to guarding live parts? (1) Unless otherwise indicated, live parts of electric equipment operating at 50 volts or more must be guarded against accidental contact by an approved cabinet or other form of approved enclosure, or by any of the following:

(a) Location in a room, vault, or similar enclosure that is accessible only to qualified persons.

(b) Suitable permanent substantial partitions or screens arranged so that only qualified persons have access to the area within reach of the live parts. Any openings in such partitions or screens must be small enough and located so that employees are not likely to come into accidental contact with live parts or to bring conducting objects into contact with them.

(c) Location on a suitable balcony, gallery, or platform elevated and accessible only to qualified persons.

(d) Elevation of eight feet or more above the floor or other working surface.

(2) In locations where electric equipment would be exposed to physical damage, enclosures or guards must be arranged and be strong enough to prevent damage.

(3) Entrances to rooms and other guarded locations containing exposed live parts must be marked with conspicuous warning signs forbidding unqualified persons to enter.

(4) Electrical repairs must be made only by qualified persons that you authorize.

(5) Fuse handling equipment, insulated for the circuit voltage, must be used to remove or install fuses when the fuse terminals are energized.

(6) Employees must be prohibited from working closely enough to an electric power circuit to contact it unless the employee is protected against electric shock.

Note: The circuit must be protected by deenergizing the circuit and grounding it, by guarding it, by effective insulation, or other means.

(7) In work areas where the exact location of underground electric power lines is unknown, employees using jack-hammers, bars or other hand tools that may contact a line must have insulated protective gloves.

[WSR 97-09-013, recodified as § 296-307-36209, filed 4/7/97, effective 4/7/97. Statutory Authority: RCW 49.17.040, [49.17.]050 and [49.17.]060. WSR 96-22-048, § 296-306A-36209, filed 10/31/96, effective 12/1/96.]

WAC 296-307-36212 What workspace must be provided? (1) When parts are exposed, the minimum clearance for the workspace must be at least six feet six inches high, or at least a radius of three feet wide.

(2) There must be enough clearance to permit at least a 90° opening of all doors or hinged panels.

[WSR 97-09-013, recodified as § 296-307-36212, filed 4/7/97, effective 4/7/97. Statutory Authority: RCW 49.17.040, [49.17.]050 and [49.17.]060. WSR 96-22-048, § 296-306A-36212, filed 10/31/96, effective 12/1/96.]

WAC 296-307-36215 What general requirements apply to splices? Conductors must be spliced or joined with splicing devices suitable for the use or by brazing, welding, or soldering with a fusible metal or alloy. Soldered splices must first be spliced or joined so they are mechanically and electrically secure without solder and then soldered. (Rosin-core solder should be used instead of acid core solder when joining electrical conductors.) All splices and joints and the free ends of conductors must be covered with an insulation equivalent to that of the conductors or with an insulating device suitable for the purpose.

[WSR 97-09-013, recodified as § 296-307-36215, filed 4/7/97, effective 4/7/97. Statutory Authority: RCW 49.17.040, [49.17.]050 and [49.17.]060. WSR 96-22-048, § 296-306A-36215, filed 10/31/96, effective 12/1/96.]

WAC 296-307-36218 What protection must be provided against combustible materials? Parts of electric equipment that in ordinary operation produce arcs, sparks, flames, or molten metal must be enclosed or separated and isolated from all combustible material.

[WSR 97-09-013, recodified as § 296-307-36218, filed 4/7/97, effective 4/7/97. Statutory Authority: RCW 49.17.040, [49.17.]050 and [49.17.]060. WSR 96-22-048, § 296-306A-36218, filed 10/31/96, effective 12/1/96.]

WAC 296-307-36221 How must electrical equipment be marked? All electrical equipment in use must have the manufacturer's name, trademark, or other descriptive marking of the organization responsible for the product on the equipment. Other markings must be provided giving voltage, current, wattage, or other ratings as necessary. The marking must be durable enough to withstand the environment.

[WSR 97-09-013, recodified as § 296-307-36221, filed 4/7/97, effective 4/7/97. Statutory Authority: RCW 49.17.040, [49.17.]050 and [49.17.]060. WSR 96-22-048, § 296-306A-36221, filed 10/31/96, effective 12/1/96.]

WAC 296-307-36224 How must disconnecting means be marked? Each disconnecting means required by this part for motors and appliances must be legibly marked to indicate its purpose, unless located and arranged so the purpose is evident. Each service, feeder, and branch circuit, at its disconnecting means or overcurrent device, must be legibly marked to indicate its purpose, unless located and arranged so the purpose is evident. These markings must be durable enough to withstand the environment involved.

[WSR 97-09-013, recodified as § 296-307-36224, filed 4/7/97, effective 4/7/97. Statutory Authority: RCW 49.17.040, [49.17.]050 and [49.17.]060. WSR 96-22-048, § 296-306A-36224, filed 10/31/96, effective 12/1/96.]

WAC 296-307-36227 What access and working space must be provided for electrical equipment of 600 volts, nominal, or less? Sufficient access and working space must be provided and maintained about all electric equipment to permit ready and safe operation and maintenance of such equipment.

(1) Unless otherwise indicated, the dimension of the working space in the direction of access to live parts operating at 600 volts or less and likely to require examination, adjustment, servicing, or maintenance while alive must be at least that indicated in the table below. Also, workspace must be at least 30 inches wide in front of the electric equipment. Distances must be measured from the live parts if they are exposed, or from the enclosure front or opening if the live parts are enclosed. Concrete, brick, or tile walls are considered grounded. Working space is not required behind assemblies such as dead-front switchboards or motor control centers where there are no renewable or adjustable parts such as fuses or switches on the back and where all connections are accessible from other directions.

Working Clearances

Nominal voltage to ground	Minimum clear distance for condition (ft)		
	(a)	(b)	(c)
0-150	13	13	3
151-600	13	3-1/2	4

Conditions:

(a) Exposed live parts on one side and no live or grounded parts on the other side of the working space, or exposed live parts on both sides guarded by suitable wood or other insulating material. Insulated wire or insulated busbars operating at 300 volts or less are not considered live parts.

(b) Exposed live parts on one side and grounded parts on the other side.

(c) Exposed live parts on both sides of the workspace (not guarded as in (a)) with the operator between.

(2) Working space required by this part must not be used for storage. When normally enclosed live parts are exposed for inspection or servicing, the working space, if in a passageway or general open space, must be suitably guarded.

(3) At least one entrance of sufficient area must be provided to give access to the working space about electric equipment.

(4) Where there are live parts normally exposed on the front of switchboards or motor control centers, the working space in front of such equipment must be at least 3 feet.

(5) All working spaces around service equipment, switchboards, panelboards, and motor control centers installed indoors must be adequately lit.

(6) The minimum headroom of working spaces about service equipment, switchboards, panelboards, or motor control centers must be 6 feet 3 inches.

"Motor control center" means an assembly of one or more enclosed sections having a common power bus and principally containing motor control units.

[WSR 97-09-013, recodified as § 296-307-36227, filed 4/7/97, effective 4/7/97. Statutory Authority: RCW 49.17.040, [49.17.]050 and [49.17.]060. WSR 96-22-048, § 296-306A-36227, filed 10/31/96, effective 12/1/96.]

WAC 296-307-36230 What access and working space must be provided for electrical equipment over 600 volts, nominal? (1) Conductors and equipment used on circuits exceeding 600 volts, nominal, must meet all requirements of WAC 296-307-36221 and the additional requirements of this section. This section does not apply to equipment on the supply side of the service conductors.

(2) Electrical installations in a vault, room, closet or area surrounded by a wall, screen, or fence, with access controlled by lock and key or other approved means, are considered accessible to qualified persons only. A wall, screen, or fence less than 8 feet high is not considered to prevent access unless it has other features that provide a degree of isolation equivalent to an 8 foot fence. The entrances to all buildings, rooms, or enclosures containing exposed live parts or exposed conductors operating at over 600 volts, nominal, must be kept locked or under the observation of a qualified person at all times.

(a) Electrical installations with exposed live parts must be accessible to qualified persons only.

(b) Electrical installations that are open to unqualified persons must be made with metal-enclosed equipment or enclosed in a vault or in an area, with access controlled by a lock. If metal-enclosed equipment is installed so that the bottom of the enclosure is less than 8 feet above the floor, the door or cover must be kept locked. Metal-enclosed switchgear, unit substations, transformers, pull boxes, connection boxes, and other similar associated equipment must be marked with appropriate caution signs. If equipment is exposed to physical damage from vehicular traffic, guards must be provided to prevent damage. Ventilating or similar openings in metal-enclosed equipment must be designed so that foreign objects inserted through these openings will be deflected from energized parts.

(3) You must provide and maintain enough space around electric equipment to permit ready and safe operation and maintenance of equipment. Where energized parts are exposed, the minimum clear workspace must be at least 6 feet 6 inches high (measured vertically from the floor or platform), or less than 3 feet wide (measured parallel to the equipment). The depth must meet the requirements of Table T. The workspace must be adequate to permit at least a 90-degree opening of doors or hinged panels.

(a) The minimum clear working space in front of electric equipment such as switchboards, control panels, switches, circuit breakers, motor controllers, relays, and similar equipment must be at least that specified in Table T unless otherwise indicated. Distances must be measured from the live parts if they are exposed, or from the enclosure front or opening if the live parts are enclosed. However, working space is not required in back of equipment such as deadfront switchboards or control assemblies where there are no renewable or adjustable parts (such as fuses or switches) on the back and where all connections are accessible from another direction. Where rear access is required to work on deenergized parts on the back of enclosed equipment, a minimum working space of 30 inches horizontally shall be provided.

Table T

Minimum Depth of Clear Working Space in Front of Electric Equipment

	Conditions (ft)		
Nominal voltage to ground	(a)	(b)	(c)
601 to 2,500	3	4	5
2,501 to 9,000	4	5	6
9,001 to 25,000	5	6	9
25,001 to 75kV1	6	8	10
Above 75kV1	8	10	12

Note: Minimum depth of clear working space in front of electric equipment with a nominal voltage to ground above 25,000 volts may be the same as for 25,000 volts under conditions (a), (b) and (c) for installations built prior to April 16, 1981.

Conditions:

(a) Exposed live parts on one side and no live or grounded parts on the other side of the working space, or exposed live parts on both sides guarded by suitable wood or other insulating materials. Insulated wire or insulated busbars operating at 300 volts or less are not considered live parts.

(b) Exposed live parts on one side and grounded parts on the other side. Concrete, brick, or tile walls will be considered grounded surfaces.

(c) Exposed live parts on both sides of the workspace (not guarded as in (a)) with the operator between.

(b) All working spaces around electric equipment must be adequately lit. The lighting outlets shall be arranged so that anyone changing lamps or making repairs on the lighting system will not be endangered by live parts or other equipment. The points of control must be located so that no one is likely to come in contact with any live part or moving part of the equipment while turning on the lights.

(c) Unguarded live parts above working space must be elevated to at least the height specified below:

Elevation of Unguarded
Energized Parts Above Working Space

Nominal voltage between phases	Minimum elevation
601 to 7,500	8 feet 6 inches
7,501 to 35,000	9 feet
Over 35kV	9 feet + 0.37 inches per kV above 35kV

Note: Minimum elevation may be 8 feet for installations built prior to April 16, 1981, if the nominal voltage between phases is in the range of 601-6600 volts.

(4) Entrance and access to workspace must meet the following requirements:

(a) At least one entrance that is at least 24 inches wide and 6 feet 6 inches high must be provided to give access to the working space around electric equipment. On switchboard and control panels over 48 inches wide, there must be one entrance at each end of the board where practical. Where bare energized parts at any voltage or insulated energized parts above 600 volts are located adjacent to the entrance, they must be suitably guarded.

(b) Permanent ladders or stairways must be provided to give safe access to the working space around electric equipment installed on platforms, balconies, mezzanine floors, or in attic or roof rooms or spaces.

[Statutory Authority: RCW 49.17.040. WSR 98-24-096, § 296-307-36230, filed 12/1/98, effective 3/1/99. WSR 97-09-013, recodified as § 296-307-36230, filed 4/7/97, effective 4/7/97. Statutory Authority: RCW 49.17.040, [49.17.]050 and [49.17.]060. WSR 96-22-048, § 296-306A-36230, filed 10/31/96, effective 12/1/96.]

WAC 296-307-364 Electrical installation and maintenance.

[WSR 97-09-013, recodified as § 296-307-364, filed 4/7/97, effective 4/7/97. Statutory Authority: RCW 49.17.040, [49.17.]050 and [49.17.]060. WSR 96-22-048, § 296-306A-364, filed 10/31/96, effective 12/1/96.]

WAC 296-307-36403 How must flexible cords and cables be installed and maintained? (1) Extension cords used with portable electric tools and appliances must be three wire and must be fitted with an approved grounding attachment plug and receptacle providing ground continuity.

Exception: This does not apply to cords used with portable tools and equipment provided by an approved system of double insulation or its equivalent.

(2) Worn or frayed electric cables are prohibited.

[WSR 97-09-013, recodified as § 296-307-36403, filed 4/7/97, effective 4/7/97. Statutory Authority: RCW 49.17.040, [49.17.]050 and [49.17.]060. WSR 96-22-048, § 296-306A-36403, filed 10/31/96, effective 12/1/96.]

WAC 296-307-36406 How must attachment plugs and receptacles be installed and maintained? (1) Attachment plugs used in work areas must be constructed so that they will endure rough use and have a suitable cord grip to prevent strain on the terminal screws.

(2) Attachment plugs must be approved grounding plugs.

(3) Receptacles for attachment plugs must have approved concealed contacts with a contact for extending ground continuity. Receptacles must be designed and constructed to ensure that the plug can be pulled out without leaving any live parts exposed to accidental contact.

(4) Polarized attachment plugs, receptacles, and cord connectors must be wired to maintain continuity.

(5) Polarized attachment plugs, receptacles, and cord connectors for plugs and polarized plugs must have the terminal intended for connection to the grounded (white) conductor identified by a metal coating that is mostly white. If the terminal is not visible, its entrance hole must be marked with the word "white," or the color white.

(6) The terminal for the connection of the equipment grounding conductor must be:

(a) A green colored, not easily removed terminal screw with hexagonal head; or

(b) A green colored, hexagonal, not easily removed terminal nut; or

(c) A green colored pressure wire connector.

If the terminal for the grounding conductor is not visible, the conductor entrance hole must be marked with the word "green" or the color green.

Note: Two-wire attachment plugs, unless of the polarity type, need not have their terminals marked for identification.

(7) Where different voltages, or types of current (A.C. or D.C.) are to be supplied by portable cords, receptacles must be designed so that attachment plugs used on the circuits are not interchangeable.

(8) Attachment plugs or other connectors supplying equipment at more than 300 volts must be skirted or otherwise designed so that arcs are confined.

[WSR 97-09-013, recodified as § 296-307-36406, filed 4/7/97, effective 4/7/97. Statutory Authority: RCW 49.17.040, [49.17.]050 and [49.17.]060. WSR 96-22-048, § 296-306A-36406, filed 10/31/96, effective 12/1/96.]

WAC 296-307-36409 What must employees do when equipment causes electrical shock? Employees must report all shocks received from electrical equipment, no matter how slight, immediately to you. The equipment causing the shock must be checked and any necessary corrective action taken immediately.

[WSR 97-09-013, recodified as § 296-307-36409, filed 4/7/97, effective 4/7/97. Statutory Authority: RCW 49.17.040, [49.17.]050 and [49.17.]060. WSR 96-22-048, § 296-306A-36409, filed 10/31/96, effective 12/1/96.]

WAC 296-307-36412 What grounding and bonding requirements apply to equipment installation and maintenance? (1) The path to ground must have enough carrying capacity to conduct safely the currents likely to be imposed on it; and have low enough impedance to limit the potential above ground and to result in the operation of the overcurrent devices in the circuit.

(2) Driven rod electrodes must, where practical, have a resistance to ground of a maximum of 25 ohms. Where the resistance is over 25 ohms, two electrodes connected in parallel shall be used.

(3) Grounding circuits must be checked to ensure that the circuit between the ground and the grounded power conductor has a resistance that is low enough to permit sufficient current to flow to cause the fuse or circuit breaker to interrupt the current.

(4) Conductors used for bonding and grounding equipment must be large enough to carry the anticipated current.

[WSR 97-09-013, recodified as § 296-307-36412, filed 4/7/97, effective 4/7/97. Statutory Authority: RCW 49.17.040, [49.17.]050 and [49.17.]060. WSR 96-22-048, § 296-306A-36412, filed 10/31/96, effective 12/1/96.]

WAC 296-307-36415 What requirements apply to disconnecting means? (1) Disconnecting means must be located or shielded so that employees will not be injured. Using open knife switches is prohibited.

(2) Boxes for disconnecting means must be securely and rigidly fastened to the surface upon which they are mounted, and fitted with covers.

[WSR 97-09-013, recodified as § 296-307-36415, filed 4/7/97, effective 4/7/97. Statutory Authority: RCW 49.17.040, [49.17.]050 and [49.17.]060. WSR 96-22-048, § 296-306A-36415, filed 10/31/96, effective 12/1/96.]

WAC 296-307-36418 What requirements apply to identification and load rating of electrical equipment? (1) Name plates, rating data, and marks of identification on electrical equipment and electrically operated machines must not be removed, defaced or obliterated.

(2) In existing installations, no changes in circuit protection must be made to increase the load beyond the load rating of the circuit wiring, as specified in the National Electrical Code, NFPA 70-1973; ANSI C1-1972, Article 310.

(3) Tampering with, bridging, or using oversize fuses is prohibited. If fuses blow repeatedly, employees must immediately report the trouble to you or to an authorized electrician.

(4) Attempting to start electric motors that kick out repeatedly is prohibited.

[WSR 97-09-013, recodified as § 296-307-36418, filed 4/7/97, effective 4/7/97. Statutory Authority: RCW 49.17.040, [49.17.]050 and [49.17.]060. WSR 96-22-048, § 296-306A-36418, filed 10/31/96, effective 12/1/96.]

WAC 296-307-36421 How must equipment be installed in wet locations? (1) Cabinets, cutout boxes, fittings, boxes, and panelboard enclosures in damp or wet locations must be installed to prevent moisture or water from entering and accumulating within the enclosures. In wet locations the enclosures must be weatherproof.

(2) Switches, circuit breakers, and switchboards installed in wet locations must be enclosed in weatherproof enclosures.

[WSR 97-09-013, recodified as § 296-307-36421, filed 4/7/97, effective 4/7/97. Statutory Authority: RCW 49.17.040, [49.17.]050 and [49.17.]060. WSR 96-22-048, § 296-306A-36421, filed 10/31/96, effective 12/1/96.]

WAC 296-307-366 Wiring design and protection.

[WSR 97-09-013, recodified as § 296-307-366, filed 4/7/97, effective 4/7/97. Statutory Authority: RCW 49.17.040, [49.17.]050 and [49.17.]060. WSR 96-22-048, § 296-306A-366, filed 10/31/96, effective 12/1/96.]

WAC 296-307-36603 How must grounded and grounding conductors be used and identified? (1) A conductor used as a grounded conductor must be identified separately from all other conductors. A conductor used as an equipment grounding conductor must be identified separately from all other conductors.

(2) A grounded conductor must not be attached to any terminal or lead to reverse the designated polarity.

(3) Using a grounding terminal or grounding-type device on a receptacle, cord connector, or attachment plug for anything other than grounding is prohibited.

[WSR 97-09-013, recodified as § 296-307-36603, filed 4/7/97, effective 4/7/97. Statutory Authority: RCW 49.17.040, [49.17.]050 and [49.17.]060. WSR 96-22-048, § 296-306A-36603, filed 10/31/96, effective 12/1/96.]

WAC 296-307-36606 What ampere rating must outlet devices have? Outlet devices must have an ampere rating at least equal to the load served.

[WSR 97-09-013, recodified as § 296-307-36606, filed 4/7/97, effective 4/7/97. Statutory Authority: RCW 49.17.040, [49.17.]050 and [49.17.]060. WSR 96-22-048, § 296-306A-36606, filed 10/31/96, effective 12/1/96.]

WAC 296-307-36609 What requirements apply to conductors? This section applies to branch circuit, feeder, and service conductors rated 600 volts, nominal, or less and run outdoors as open conductors.

(1) Conductors supported on poles must provide a horizontal climbing space of at least the following:

(a) For power conductors below communication conductors, 30 inches.

(b) For power conductors alone or above communication conductors:

- 300 volts or less, 24 inches;
- More than 300 volts, 30 inches.

(c) For communication conductors below power conductors with power conductors of:

- 300 volts or less, 24 inches;
- More than 300 volts, 30 inches.

(2) Open conductors must provide at least the following minimum clearances:

(a) 10 feet, above finished grade, sidewalks, or from any platform or projection from which they might be reached;

(b) 12 feet, over areas subject to vehicular traffic other than truck traffic;

(c) 15 feet, over areas that are subject to truck traffic; except

(d) 18 feet, over public streets, alleys, roads, and driveways.

(3) Conductors must have a clearance of at least 3 feet from windows, doors, porches, fire escapes, or similar locations. Conductors run above the top level of a window are considered to be out of reach from that window and, therefore, do not have to be 3 feet away.

(4) Conductors must have a clearance of at least 8 feet from the highest point of roofs they pass over.

Exceptions:

(a) Where the voltage between conductors is 300 volts or less and the roof has a slope of at least 4 inches in 12, the clearance from the roofs must be at least 3 feet; or

(b) Where the voltage between conductors is 300 volts or less, the conductors do not pass over more than 4 feet of the overhang portion of the roof, and they are terminated at a through-the-roof raceway or approved support, the clearance from the roofs must be at least 18 inches.

(5) Lamps for outdoor lighting must be located below all live conductors, transformers, or other electric equipment, unless such equipment is controlled by a disconnecting means that can be locked in the open position or unless ade-

quate clearances or other safeguards are provided for relamping operations.

[WSR 97-09-013, recodified as § 296-307-36609, filed 4/7/97, effective 4/7/97. Statutory Authority: RCW 49.17.040, [49.17.]050 and [49.17.]060. WSR 96-22-048, § 296-306A-36609, filed 10/31/96, effective 12/1/96.]

WAC 296-307-36612 What design and protection requirements apply to service-entrances? (1) Disconnecting means for service-entrances must meet the following requirements:

(a) Means must be provided to disconnect all conductors in a building or other structure from the service-entrance conductors. The disconnecting means must plainly indicate whether it is in the open or closed position and must be installed at a readily accessible location nearest the point of entrance of the service-entrance conductors.

(b) Each service disconnecting means must disconnect all ungrounded conductors at the same time.

(2) The following additional requirements apply to services over 600 volts, nominal.

(a) Service-entrance conductors installed as open wires must be guarded to make them accessible only to qualified persons.

(b) Signs warning of high voltage must be posted where other than qualified employees might come in contact with live parts.

[WSR 97-09-013, recodified as § 296-307-36612, filed 4/7/97, effective 4/7/97. Statutory Authority: RCW 49.17.040, [49.17.]050 and [49.17.]060. WSR 96-22-048, § 296-306A-36612, filed 10/31/96, effective 12/1/96.]

WAC 296-307-36615 What overcurrent protection must be provided? (1) The following requirements apply to overcurrent protection of circuits rated 600 volts, nominal, or less.

(a) Conductors and equipment must be protected from overcurrent according to their ability to safely conduct current.

(b) Except for motor running overload protection, overcurrent devices must not interrupt the continuity of the grounded conductor unless all conductors of the circuit are opened at the same time.

(c) Except for service fuses, all cartridge fuses that are accessible to other than qualified persons and all fuses and thermal cutouts on circuits over 150 volts to ground must have disconnecting means. This disconnecting means must be installed so that the fuse or thermal cutout can be disconnected from its supply without disrupting service to equipment and circuits unrelated to those protected by the overcurrent device.

(d) Overcurrent devices must be readily accessible to each employee or authorized building management personnel. These overcurrent devices must be located where they will be protected against physical damage and away from easily ignitable material.

(e) Fuses and circuit breakers must be located or shielded so that employees will not be burned or otherwise injured by their operation.

(f) Circuit breakers must meet the following requirements:

(i) Circuit breakers must clearly indicate whether they are in the open (off) or closed (on) position.

(ii) Where circuit breaker handles on switchboards are operated vertically rather than horizontally or rotationally, the up position of the handle must be the closed (on) position.

(iii) If used as switches in 120-volt, fluorescent lighting circuits, circuit breakers must be approved for the purpose and marked "SWD."

(2) Feeders and branch circuits over 600 volts, nominal, must have short-circuit protection.

[WSR 97-09-013, recodified as § 296-307-36615, filed 4/7/97, effective 4/7/97. Statutory Authority: RCW 49.17.040, [49.17.]050 and [49.17.]060. WSR 96-22-048, § 296-306A-36615, filed 10/31/96, effective 12/1/96.]

WAC 296-307-36618 What premises wiring systems must be grounded? The following systems that supply premises wiring must be grounded:

(1) All 3-wire DC systems must have their neutral conductor grounded.

(2) Two-wire DC systems operating at 50-300 volts between conductors must be grounded.

Exceptions: This requirement does not apply if:

(a) They supply only industrial equipment in limited areas and are equipped with a ground detector; or

(b) They are rectifier-derived from an AC system that meets the requirements of subsections (3), (4), and (5) of this section; or

(c) They are fire-protective signaling circuits with a maximum current of 0.030 amperes.

(3) AC circuits of less than 50 volts must be grounded if they are installed as overhead conductors outside of buildings or if they are supplied by transformers and the transformer primary supply system is ungrounded or exceeds 150 volts to ground.

(4) AC systems of 50-1000 volts must be grounded under any of the following conditions:

(a) If the system can be grounded so that the maximum voltage to ground on the ungrounded conductors is a maximum of 150 volts;

(b) If the system is nominally rated 480Y/277 volt, 3-phase, 4-wire in which the neutral is used as a circuit conductor;

(c) If the system is nominally rated 240/120 volt, 3-phase, 4-wire in which the midpoint of one phase is used as a circuit conductor; or

(d) If a service conductor is uninsulated.

(5) Exceptions: AC systems of 50-1000 volts are not required to be grounded under any of the following conditions:

(a) If the system is used exclusively to supply industrial electric furnaces for melting, refining, tempering, and the like.

(b) If the system is separately derived and is used exclusively for rectifiers supplying only adjustable speed industrial drives.

(c) If the system is separately derived and is supplied by a transformer that has a primary voltage rating less than 1000 volts, if all of the following conditions are met:

(i) The system is used exclusively for control circuits;

(ii) The conditions of maintenance and supervision ensure that only qualified persons will service the installation;

(iii) Continuity of control power is required; and

(iv) Ground detectors are installed on the control system.

[WSR 97-09-013, recodified as § 296-307-36618, filed 4/7/97, effective 4/7/97. Statutory Authority: RCW 49.17.040, [49.17.]050 and [49.17.]060. WSR 96-22-048, § 296-306A-36618, filed 10/31/96, effective 12/1/96.]

WAC 296-307-36621 Must the conductor be grounded for AC premises wiring? For AC premises wiring systems the identified conductor must be grounded.

[WSR 97-09-013, recodified as § 296-307-36621, filed 4/7/97, effective 4/7/97. Statutory Authority: RCW 49.17.040, [49.17.]050 and [49.17.]060. WSR 96-22-048, § 296-306A-36621, filed 10/31/96, effective 12/1/96.]

WAC 296-307-36624 What general requirements apply to grounding conductors? (1) For a grounded system, a grounding electrode conductor must be used to connect both the equipment grounding conductor and the grounded circuit conductor to the grounding electrode. Both the equipment grounding conductor and the grounding electrode conductor must be connected to the grounded circuit conductor on the supply side of the service disconnecting means, or on the supply side of the system disconnecting means or overcurrent devices if the system is separately derived.

(2) For an ungrounded service-supplied system, the equipment grounding conductor must be connected to the grounding electrode conductor at the service equipment. For an ungrounded separately derived system, the equipment grounding conductor must be connected to the grounding electrode conductor at, or ahead of, the system disconnecting means or overcurrent devices.

(3) On extensions of existing branch circuits that do not have an equipment grounding conductor, grounding-type receptacles may be grounded to a grounded cold water pipe near the equipment.

[WSR 97-09-013, recodified as § 296-307-36624, filed 4/7/97, effective 4/7/97. Statutory Authority: RCW 49.17.040, [49.17.]050 and [49.17.]060. WSR 96-22-048, § 296-306A-36624, filed 10/31/96, effective 12/1/96.]

WAC 296-307-36627 Must the path to ground be continuous? The path to ground from circuits, equipment, and enclosures must be permanent and continuous.

[WSR 97-09-013, recodified as § 296-307-36627, filed 4/7/97, effective 4/7/97. Statutory Authority: RCW 49.17.040, [49.17.]050 and [49.17.]060. WSR 96-22-048, § 296-306A-36627, filed 10/31/96, effective 12/1/96.]

WAC 296-307-36630 What supports, enclosures, and equipment must be grounded? (1) Metal cable trays, metal raceways, and metal enclosures for conductors must be grounded.

Exceptions:

(a) Metal enclosures such as sleeves that are used to protect cable assemblies from physical damage need not be grounded; or

(b) Metal enclosures for conductors added to existing installations of open wire, knob-and-tube wiring, and nonmetallic-sheathed cable need not be grounded if all of the following conditions are met:

(i) Runs are less than 25 feet;

(ii) Enclosures are free from probable contact with ground, grounded metal, metal laths, or other conductive materials; and

(iii) Enclosures are guarded against employee contact.

(2) Metal enclosures for service equipment must be grounded.

(3) Frames of electric ranges, wall-mounted ovens, counter-mounted cooking units, clothes dryers, and metal outlet or junction boxes that are part of the circuit for these appliances must be grounded.

(4) Exposed noncurrent-carrying metal parts of fixed equipment that may become energized must be grounded under any of the following conditions:

(a) If within 8 feet vertically or 5 feet horizontally of ground or grounded metal objects and subject to employee contact;

(b) If located in a wet or damp location and not isolated;

(c) If in electrical contact with metal;

(d) If in a hazardous (classified) location;

(e) If supplied by a metal-clad, metal-sheathed, or grounded metal raceway wiring method;

(f) If equipment operates with any terminal at over 150 volts to the ground; however, the following need not be grounded:

(i) Enclosures for switches or circuit breakers used for other than service equipment and accessible to qualified persons only;

(ii) Metal frames of electrically heated appliances that are permanently and effectively insulated from ground; and

(iii) The cases of distribution apparatus such as transformers and capacitors mounted on wooden poles that are over 8 feet above ground or grade level.

(5) Under any of the conditions below, exposed noncurrent-carrying metal parts of cord-connected and plug-connected equipment that may become energized must be grounded.

(a) When equipment is in hazardous (classified) locations.

(b) When equipment is operated at over 150 volts to ground.

Exception: Guarded motors and metal frames of electrically heated appliances need not be grounded if the appliance frames are permanently and effectively insulated from ground.

(c) When equipment is one of the following:

- Refrigerators, freezers, and air conditioners;
- Clothes-washing, clothes-drying and dishwashing machines, sump pumps, and electrical aquarium equipment;
- Hand-held motor-operated tools;
- The following motor-operated appliances: Hedge clippers, lawn mowers, snow blowers, and wet scrubbers;
- Cord-connected and plug-connected appliances used in damp or wet locations or by employees standing on the ground or on metal floors or working inside of metal tanks or boilers;
- Tools likely to be used in wet and conductive locations; and
- Portable hand lamps.

Tools likely to be used in wet and conductive locations need not be grounded if supplied through an isolating transformer with an ungrounded secondary of a maximum of 50 volts. Listed or labeled portable tools and appliances protected by an approved system of double insulation, or its equivalent, need not be grounded. The equipment must be distinctively marked to indicate that the tool or appliance uses an approved system of double insulation.

(6) The metal parts of the following nonelectrical equipment must be grounded: Frames and tracks of electrically

operated cranes; frames of nonelectrically driven elevator cars to which electric conductors are attached; hand operated metal shifting ropes or cables of electric elevators, and metal partitions, grill work, and other metal enclosures around equipment of over 750 volts between conductors.

[WSR 97-09-013, recodified as § 296-307-36630, filed 4/7/97, effective 4/7/97. Statutory Authority: RCW 49.17.040, [49.17.]050 and [49.17.]060. WSR 96-22-048, § 296-306A-36630, filed 10/31/96, effective 12/1/96.]

WAC 296-307-36633 How must fixed equipment be grounded? (1) Noncurrent-carrying metal parts of fixed equipment, if required to be grounded by this section, must be grounded by an equipment grounding conductor that is contained within the same raceway, cable, or cord, or runs with or encloses the circuit conductors. For DC circuits only, the equipment grounding conductor may be run separately from the circuit conductors.

(2) Electric equipment is considered grounded if it is secured to, and in electrical contact with, a metal rack or structure that is provided for its support and the metal rack or structure is grounded as described above.

For installations made before May 30, 1982, electric equipment is also considered grounded if it is secured to, and in metallic contact with, the grounded structural metal frame of a building. Metal car frames supported by metal hoisting cables attached to or running over metal sheaves or drums of grounded elevator machines are also considered grounded.

[WSR 97-09-013, recodified as § 296-307-36633, filed 4/7/97, effective 4/7/97. Statutory Authority: RCW 49.17.040, [49.17.]050 and [49.17.]060. WSR 96-22-048, § 296-306A-36633, filed 10/31/96, effective 12/1/96.]

WAC 296-307-36636 How must high voltage systems be grounded? Grounded high voltage (1000 volts or more) systems and circuits must meet all requirements of WAC 296-307-366 and the additional requirements of this section.

(1) Systems supplying portable or mobile high voltage equipment, other than substations installed on a temporary basis, must meet the following requirements:

(a) Portable and mobile high voltage equipment must be supplied from a system having its neutral grounded through an impedance. If a delta-connected high voltage system is used to supply the equipment, a system neutral must be derived.

(b) Exposed noncurrent-carrying metal parts of portable and mobile equipment must be connected by an equipment grounding conductor to the point at which the system neutral impedance is grounded.

(c) Ground-fault detection and relaying must be provided to automatically deenergize any high voltage system component that has developed a ground fault. The continuity of the equipment grounding conductor must be continuously monitored to deenergize automatically the high voltage feeder to the portable equipment on loss of continuity of the equipment grounding conductor.

(d) The grounding electrode to which the portable or mobile equipment system neutral impedance is connected must be isolated from and separated in the ground by at least 20 feet from any other system or equipment grounding electrode. There must be no direct connection between the grounding electrodes, such as buried pipe, fence, etc.

(2) All noncurrent-carrying metal parts of portable equipment and fixed equipment including their associated fences, housings, enclosures, and supporting structures shall be grounded. However, equipment that is guarded by location and isolated from ground need not be grounded. Additionally, pole-mounted distribution apparatus over 8 feet above ground or grade level need not be grounded.

[Statutory Authority: RCW 49.17.040. WSR 98-24-096, § 296-307-36636, filed 12/1/98, effective 3/1/99. WSR 97-09-013, recodified as § 296-307-36636, filed 4/7/97, effective 4/7/97. Statutory Authority: RCW 49.17.040, [49.17.]050 and [49.17.]060. WSR 96-22-048, § 296-306A-36636, filed 10/31/96, effective 12/1/96.]

WAC 296-307-368 Wiring methods, components, and equipment for general use.

[WSR 97-09-013, recodified as § 296-307-368, filed 4/7/97, effective 4/7/97. Statutory Authority: RCW 49.17.040, [49.17.]050 and [49.17.]060. WSR 96-22-048, § 296-306A-368, filed 10/31/96, effective 12/1/96.]

WAC 296-307-36803 Does this section apply to factory-assembled equipment? WAC 296-307-368 does not apply to conductors that are an integral part of factory-assembled equipment.

[Statutory Authority: RCW 49.17.040. WSR 98-24-096, § 296-307-36803, filed 12/1/98, effective 3/1/99. WSR 97-09-013, recodified as § 296-307-36803, filed 4/7/97, effective 4/7/97. Statutory Authority: RCW 49.17.040, [49.17.]050 and [49.17.]060. WSR 96-22-048, § 296-307-36803, filed 10/31/96, effective 12/1/96.]

WAC 296-307-36806 What wiring methods must be used for temporary wiring? Temporary electrical power and lighting wiring methods may be of a class less than would be required for a permanent installation. All requirements for permanent wiring apply to temporary wiring installations, except as indicated in this section.

(1) Temporary electrical power and lighting installations 600 volts, nominal, or less must only be used:

(a) During and for remodeling, maintenance, repair, or demolition of buildings, structures, or equipment, and similar activities;

(b) For experimental or development work; and

(c) For a maximum of 90 days for Christmas lighting and similar purposes.

(2) Temporary wiring over 600 volts, nominal, must only be used during periods of tests, experiments, or emergencies.

(3) General requirements for temporary wiring.

(a) Working spaces, walkways, and similar locations must be kept clear of power cords.

(b) All temporary wiring must be grounded. (See NFPA 70 Art. 250.)

(c) All wiring equipment must be maintained as vapor-tight, dust-tight, or fiber-tight as their approval requires. There must be no loose or missing screws, gaskets, threaded connections, or other conditions that impair the required tightness.

(d) Take precautions to make necessary open wiring accessible only to authorized personnel.

(e) Feeders must originate in an approved distribution center. The conductors must be run as multiconductor cord or cable assemblies, or, where not subject to physical damage, they may be run as open conductors on insulators not more than 10 feet apart.

(f) Branch circuits must originate in an approved power outlet or panelboard. Conductors must be multiconductor cord or cable assemblies or open conductors. If run as open conductors they must be fastened at ceiling height every 10 feet. A branch-circuit conductor must not be laid on the floor. Each branch circuit that supplies receptacles or fixed equipment must have a separate equipment grounding conductor if run as open conductors.

(g) Receptacles must be of the grounding type. Unless installed in a complete metallic raceway, each branch circuit must have a separate equipment grounding conductor and all receptacles must be electrically connected to the grounding conductor.

(h) A bare conductor or an earth return must not be used to wire any temporary circuit.

(i) Suitable disconnecting switches or plug connectors must be installed to permit the disconnection of all ungrounded conductors of each temporary circuit.

(j) Lamps for general illumination must be protected from accidental contact or breakage. Lamps must be elevated at least 7 feet from normal working surface or by a suitable fixture or lampholder with a guard.

(k) Flexible cords and cables must be protected from accidental damage. Sharp corners and projections must be avoided. Where passing through doorways or other pinch points, flexible cords and cables must be protected to avoid damage.

(4) General requirements for temporary lighting.

(a) Temporary lights must have guards to prevent accidental contact with the bulb.

Note: Guards are not required when the entire bulb is below the rim and completely surrounded and protected by the reflector.

(b) Temporary lights must have heavy duty electric cords with connections and insulation maintained in safe condition.

(c) Temporary lights must not be suspended by their electric cords unless cords and lights are designed for suspension.

(d) Brass shell, paper-lined lamp holders are prohibited.

(e) Portable extension lamps used where flammable vapors or gases, combustible dusts, or easily ignitable fibers or flyings are present, must be specifically approved as complete assemblies for the type of hazard.

[WSR 97-09-013, recodified as § 296-307-36806, filed 4/7/97, effective 4/7/97. Statutory Authority: RCW 49.17.040, [49.17.]050 and [49.17.]060. WSR 96-22-048, § 296-307-36806, filed 10/31/96, effective 12/1/96.]

WAC 296-307-36809 When may cable trays be used? (1) Only the following may be installed in cable tray systems:

(a) Mineral-insulated metal-sheathed cable (Type MI);

(b) Armored cable (Type AC);

(c) Metal-clad cable (Type MC);

(d) Power-limited tray cable (Type PLTC);

(e) Nonmetallic-sheathed cable (Type NM or NMC);

(f) Shielded nonmetallic-sheathed cable (Type SNM);

(g) Multiconductor service-entrance cable (Type SE or USE);

(h) Multiconductor underground feeder and branch-circuit cable (Type UF);

(i) Power and control tray cable (Type TC);

(j) Other factory-assembled, multiconductor control, signal, or power cables that are specifically approved for installation in cable trays; or

(k) Any approved conduit or raceway with its contained conductors.

(2) In industrial establishments only, where conditions of maintenance and supervision ensure that only qualified persons will service the installed cable tray system, the following cables may also be installed in ladder, ventilated trough, or 4 inch ventilated channel-type cable trays:

Single conductor cables that are 250 MCM or larger and are Types RHH, RHW, MV, USE, or THW, and other 250 MCM or larger single conductor cables if specifically approved for installation in cable trays. Where exposed to direct rays of the sun, cables must be sunlight-resistant.

(3) Cable trays in hazardous (classified) locations must contain only the cable types permitted in such locations.

Exception: Cable tray systems must not be used in hoistways or where subjected to severe physical damage.

[WSR 97-09-013, recodified as § 296-307-36809, filed 4/7/97, effective 4/7/97. Statutory Authority: RCW 49.17.040, [49.17.]050 and [49.17.]060. WSR 96-22-048, § 296-306A-36809, filed 10/31/96, effective 12/1/96.]

WAC 296-307-36812 What requirements apply to open wiring on insulators? (1) Open wiring on insulators is only permitted on systems of 600 volts, nominal, or less for industrial or agricultural establishments and for services.

(2) Conductors must be rigidly supported on noncombustible, nonabsorbent insulating materials and must not contact any other objects.

(3) In dry locations with no exposure to severe physical damage, conductors may be separately enclosed in flexible nonmetallic tubing. The tubing must be in continuous lengths a maximum of 15 feet and secured to the surface by straps at maximum intervals of 4 feet 6 inches.

(4) Open conductors must be separated from contact with walls, floors, and wood cross members, or partitions through which they pass by tubes or bushings of noncombustible, nonabsorbent insulating material. If the bushing is shorter than the hole, a waterproof sleeve of nonconductive material must be inserted in the hole and an insulating bushing slipped into the sleeve at each end to keep the conductors completely out of contact with the sleeve. Each conductor must be carried through a separate tube or sleeve.

(5) Conductors within 7 feet of the floor are considered exposed to physical damage. Where open conductors cross ceiling joints and wall studs and are exposed to physical damage, they must be protected.

[WSR 97-09-013, recodified as § 296-307-36812, filed 4/7/97, effective 4/7/97. Statutory Authority: RCW 49.17.040, [49.17.]050 and [49.17.]060. WSR 96-22-048, § 296-306A-36812, filed 10/31/96, effective 12/1/96.]

WAC 296-307-36815 What wiring requirements apply to cabinets, boxes, and fittings? (1) Conductors entering boxes, cabinets, or fittings must be protected from abrasion, and openings through which conductors enter must be closed. Unused openings in cabinets, boxes, and fittings must also be closed.

(2) All pull boxes, junction boxes, and fittings must have covers approved for the purpose. All metal covers must be grounded. In completed installations each outlet box must

have a cover, faceplate, or fixture canopy. A cover of an outlet box with holes through which a flexible cord pendant passes must have bushings designed for the purpose or have a smooth, well-rounded surface for the cord to run on.

(3) All pull and junction boxes for systems over 600 volts, nominal, must meet the following requirements:

(a) Boxes must provide a complete enclosure for the contained conductors or cables.

(b) Boxes must be closed by suitable covers securely fastened in place. Underground box covers that weigh over 100 pounds meet this requirement. Covers for boxes must be permanently marked "HIGH VOLTAGE." The marking must be on the outside of the box cover and must be readily visible and legible.

[WSR 97-09-013, recodified as § 296-307-36815, filed 4/7/97, effective 4/7/97. Statutory Authority: RCW 49.17.040, [49.17.]050 and [49.17.]060. WSR 96-22-048, § 296-306A-36815, filed 10/31/96, effective 12/1/96.]

WAC 296-307-36818 What requirements apply to switches? (1) Single-throw knife switches must be connected so that the blades are dead when the switch is in the open position. Single-throw knife switches must be placed so that gravity will not tend to close them. Single-throw knife switches approved for use in the inverted position must have a locking device that keeps the blades open when set. Double-throw knife switches may be mounted so that the throw will be either vertical or horizontal. However, if the throw is vertical a locking device must be provided to ensure that the blades remain open when so set.

(2) Flush snap switches that are mounted in ungrounded metal boxes and located within reach of conducting floors or other conducting surfaces must have faceplates of nonconducting, noncombustible material.

[WSR 97-09-013, recodified as § 296-307-36818, filed 4/7/97, effective 4/7/97. Statutory Authority: RCW 49.17.040, [49.17.]050 and [49.17.]060. WSR 96-22-048, § 296-306A-36818, filed 10/31/96, effective 12/1/96.]

WAC 296-307-36821 Where must switchboards and panelboards be located? Switchboards that have any exposed live parts must be located in permanently dry locations and accessible only to qualified persons. Panelboards must be mounted in cabinets, cutout boxes, or enclosures approved for the purpose and must be dead front. However, panelboards other than the dead front externally operable type are permitted where accessible only to qualified persons. Exposed blades of knife switches must be dead when open.

[WSR 97-09-013, recodified as § 296-307-36821, filed 4/7/97, effective 4/7/97. Statutory Authority: RCW 49.17.040, [49.17.]050 and [49.17.]060. WSR 96-22-048, § 296-306A-36821, filed 10/31/96, effective 12/1/96.]

WAC 296-307-36824 When must conductors be insulated? All conductors used for general wiring must be insulated unless otherwise permitted in this section. The conductor insulation must be approved for the voltage, operating temperature, and location of use. Insulated conductors must be distinguishable by appropriate color or other means as grounded conductors, ungrounded conductors, or equipment grounding conductors.

[WSR 97-09-013, recodified as § 296-307-36824, filed 4/7/97, effective 4/7/97. Statutory Authority: RCW 49.17.040, [49.17.]050 and [49.17.]060. WSR 96-22-048, § 296-306A-36824, filed 10/31/96, effective 12/1/96.]

WAC 296-307-36827 When may flexible cords and cables be used? (1) Flexible cords and cables must be approved and suitable for conditions of use and location. Flexible cords and cables must be used only for:

(a) Pendants;

(b) Wiring of fixtures;

(c) Connection of portable lamps or appliances;

(d) Elevator cables;

(e) Wiring of cranes and hoists;

(f) Connection of stationary equipment to facilitate frequent interchange;

(g) Prevention of the transmission of noise or vibration;

(h) Appliances where the fastening means and mechanical connections are designed to permit removal for maintenance and repair; or

(i) Data processing cables approved as a part of the data processing system.

(2) If used as permitted above, the flexible cord must have an attachment plug and shall be energized from an approved receptacle outlet.

(3) Unless permitted in subsection (1) of this section, flexible cords and cables must not be used:

(a) As a substitute for the fixed wiring of a structure;

(b) Where run through holes in walls, ceilings, or floors;

(c) Where run through doorways, windows, or similar openings;

(d) Where attached to building surfaces; or

(e) Where concealed behind building walls, ceilings, or floors.

(4) Flexible cords used in show windows and showcases must be Type S, SO, SJ, SJO, ST, STO, SJT, SJTO, or AFS except for the wiring of chain-supported lighting fixtures and supply cords for portable lamps and other merchandise being displayed or exhibited.

[WSR 97-09-013, recodified as § 296-307-36827, filed 4/7/97, effective 4/7/97. Statutory Authority: RCW 49.17.040, [49.17.]050 and [49.17.]060. WSR 96-22-048, § 296-306A-36827, filed 10/31/96, effective 12/1/96.]

WAC 296-307-36830 How must flexible cords and cables be identified, spliced, and terminated? (1) A conductor of a flexible cord or cable that is used as a grounded conductor or an equipment grounding conductor must be distinguishable from other conductors. Types SJ, SJO, SJT, SJTO, S, SO, ST, and STO must be durably marked on the surface with the type designation, size, and number of conductors.

(2) Flexible cords must be used only in continuous lengths without splice or tap. Vulcanized splices or equivalent means such as systems using shrinkable materials may be used to repair flexible cords. Hard service flexible cords No. 12 or larger may be repaired by splice if the splice retains the insulation, outer sheath properties, and usage characteristics of the cord being spliced.

(3) Flexible cords must be connected to devices and fittings so that strain relief is provided to prevent pull from being directly transmitted to joints or terminal screws.

[WSR 97-09-013, recodified as § 296-307-36830, filed 4/7/97, effective 4/7/97. Statutory Authority: RCW 49.17.040, [49.17.]050 and [49.17.]060. WSR 96-22-048, § 296-306A-36830, filed 10/31/96, effective 12/1/96.]

WAC 296-307-36833 What requirements apply to multiconductor portable cable? Multiconductor portable cable for use in supplying power to portable or mobile equipment at over 600 volts, nominal, must consist of No. 8 or larger conductors employing flexible stranding. Cables operated at over 2,000 volts must be shielded to confine the voltage stresses to the insulation. Grounding conductors must be provided. Connectors for these cables must be locking with provisions to prevent their opening or closing while energized. Strain relief must be provided at connections and terminations. Portable cables must not be operated with splices unless the splices are permanent molded, vulcanized, or other approved type. Termination enclosures must be suitably marked with a high voltage hazard warning, and terminations must be accessible only to authorized and qualified personnel.

[WSR 97-09-013, recodified as § 296-307-36833, filed 4/7/97, effective 4/7/97. Statutory Authority: RCW 49.17.040, [49.17.]050 and [49.17.]060. WSR 96-22-048, § 296-306A-36833, filed 10/31/96, effective 12/1/96.]

WAC 296-307-36836 When may fixture wires be used? (1) A fixture wire must be approved for the voltage, temperature, and location of use. A fixture wire used as a grounded conductor must be identified.

(2) Fixture wires may be used:

(a) For installation in lighting fixtures and in similar equipment where enclosed or protected and not subject to bending or twisting in use; or

(b) For connecting lighting fixtures to the branch-circuit conductors supplying the fixtures.

(3) Fixture wires must not be used as branch-circuit conductors except as permitted for Class 1 power limited circuits.

[WSR 97-09-013, recodified as § 296-307-36836, filed 4/7/97, effective 4/7/97. Statutory Authority: RCW 49.17.040, [49.17.]050 and [49.17.]060. WSR 96-22-048, § 296-306A-36836, filed 10/31/96, effective 12/1/96.]

WAC 296-307-36839 What requirements apply to wiring for lighting fixtures, lampholders, lamps, and receptacles? (1) Fixtures, lampholders, lamps, rosettes, and receptacles must have no live parts normally exposed to employee contact. However, rosettes and cleat-type lampholders and receptacles located at least 8 feet above the floor may have exposed parts.

(2) Handlamps of the portable type supplied through flexible cords must have a handle of molded composition or other material approved for the purpose, and a substantial guard must be attached to the lampholder or the handle.

(3) Lampholders of the screw-shell type must be installed for use as lampholders only. Lampholders installed in wet or damp locations must be weatherproof.

(4) Fixtures installed in wet or damp locations must be approved for the purpose and must be constructed or installed so that water cannot enter or accumulate in wireways, lampholders, or other electrical parts.

[WSR 97-09-013, recodified as § 296-307-36839, filed 4/7/97, effective 4/7/97. Statutory Authority: RCW 49.17.040, [49.17.]050 and [49.17.]060. WSR 96-22-048, § 296-306A-36839, filed 10/31/96, effective 12/1/96.]

WAC 296-307-36842 What requirements apply to wiring for receptacles, cord connectors, and attachment plugs (caps)? (1) Receptacles, cord connectors, and attachment plugs must be constructed so that no receptacle or cord connector will accept an attachment plug with a different voltage or current rating than that for which the device is intended. However, a 20-ampere T-slot receptacle or cord connector may accept a 15-ampere attachment plug of the same voltage rating.

(2) A receptacle installed in a wet or damp location must be suitable for the location.

[WSR 97-09-013, recodified as § 296-307-36842, filed 4/7/97, effective 4/7/97. Statutory Authority: RCW 49.17.040, [49.17.]050 and [49.17.]060. WSR 96-22-048, § 296-306A-36842, filed 10/31/96, effective 12/1/96.]

WAC 296-307-36845 What requirements apply to wiring for appliances? (1) Appliances, other than those in which the current-carrying parts at high temperatures are necessarily exposed, must have no live parts normally exposed to employee contact.

(2) Each appliance must have a disconnecting means.

(3) Each appliance must be marked with its rating in volts and amperes or volts and watts.

[WSR 97-09-013, recodified as § 296-307-36845, filed 4/7/97, effective 4/7/97. Statutory Authority: RCW 49.17.040, [49.17.]050 and [49.17.]060. WSR 96-22-048, § 296-306A-36845, filed 10/31/96, effective 12/1/96.]

WAC 296-307-36848 What requirements apply to wiring for motors, motor circuits, and controllers? (1) If specified that one piece of equipment must be "in sight from" another piece of equipment, one shall be visible and not more than 50 feet from the other.

(2) Disconnecting means must meet the following requirements:

(a) A disconnecting means must be located in sight from the controller location. However, a single disconnecting means may be located adjacent to a group of coordinated controllers mounted adjacent to each other or a multimotor continuous process machine. The controller disconnecting means for motor branch circuits over 600 volts, nominal, may be out of sight of the controller, if the controller is marked with a warning label giving the location and identification of the disconnecting means which is to be locked in the open position.

(b) The disconnecting means must disconnect the motor and the controller from all ungrounded supply conductors and must be designed so that no pole can be operated independently.

(c) If a motor and the driven machinery are not in sight from the controller location, the installation must meet one of the following conditions:

(i) The controller disconnecting means must be able to be locked in the open position.

(ii) A manually operable switch that will disconnect the motor from its source of supply must be placed in sight from the motor location.

(d) The disconnecting means must plainly indicate whether it is in the open (off) or closed (on) position.

(e) The disconnecting means must be readily accessible. If more than one disconnect is provided for the same equipment, only one need be readily accessible.

(f) An individual disconnecting means must be provided for each motor, but a single disconnecting means may be used for a group of motors under any of the following conditions:

(i) If a number of motors drive special parts of a single machine or piece of apparatus, such as a metal or woodworking machine, crane, or hoist; or

(ii) If a group of motors is under the protection of one set of branch-circuit protective devices; or

(iii) If a group of motors is in a single room in sight from the location of the disconnecting means.

(3) Motors, motor-control apparatus, and motor branch-circuit conductors must be protected against overheating from motor overloads or failure to start, and against short-circuits or ground faults. Overload protection is not required if it will stop a motor where a shutdown is likely to introduce additional or increased hazards, as in the case of fire pumps, or where continued operation of a motor is necessary for a safe shutdown of equipment or process and motor overload sensing devices are connected to a supervised alarm.

(4) Live parts of all voltages must be protected according to the following:

(a) Stationary motors with commutators, collectors, and brush rigging located inside of motor end brackets and not conductively connected to supply circuits operating at more than 150 volts to ground may have those parts unguarded. Exposed live parts of motors and controllers operating at 50 volts or more between terminals must be guarded against accidental contact by any of the following:

(i) By installation in a room or enclosure that is accessible only to qualified persons;

(ii) By installation on a suitable balcony, gallery, or platform, elevated and arranged to exclude unqualified persons; or

(iii) By elevation 8 feet or more above the floor.

(b) Where live parts of motors or controllers operating at over 150 volts to ground are guarded against accidental contact only by location, and where adjustment or other attendance may be necessary during the operation of the apparatus, suitable insulating mats or platforms must be provided so that the attendant cannot readily touch live parts unless standing on the mats or platforms.

[WSR 97-09-013, recodified as § 296-307-36848, filed 4/7/97, effective 4/7/97. Statutory Authority: RCW 49.17.040, [49.17.]050 and [49.17.]060. WSR 96-22-048, § 296-306A-36848, filed 10/31/96, effective 12/1/96.]

WAC 296-307-36851 What requirements apply to wiring for transformers? (1) This section applies to the installation of all transformers.

Exception:

(a) Current transformers;

(b) Dry-type transformers installed as a component part of other apparatus;

(c) Transformers that are an integral part of a high frequency or electrostatic-coating apparatus;

(d) Transformers used with Class 2 and Class 3 circuits, sign and outline lighting, electric discharge lighting, and power-limited fire-protective signaling circuits; and

(e) Liquid-filled or dry-type transformers used for research, development, or testing, where effective safeguard arrangements are provided.

(2) The operating voltage of exposed live parts of transformer installations must be indicated by warning signs or visible markings on the equipment or structure.

(3) Dry-type, high fire point liquid-insulated, and askarel-insulated transformers installed indoors and rated over 35kV must be in a vault.

(4) If they present a fire hazard to employees, oil-insulated transformers installed indoors must be in a vault.

(5) Combustible material, combustible buildings and parts of buildings, fire escapes, and door and window openings must be safeguarded from fires that may originate in oil-insulated transformers attached or adjacent to a building or combustible material.

(6) Transformer vaults must be constructed to contain fire and combustible liquids within the vault and to prevent unauthorized access. Locks and latches must be arranged so that a vault door can be readily opened from the inside.

(7) Any pipe or duct system foreign to the vault installation must not enter or pass through a transformer vault.

(8) Materials must not be stored in transformer vaults.

[WSR 97-09-013, recodified as § 296-307-36851, filed 4/7/97, effective 4/7/97. Statutory Authority: RCW 49.17.040, [49.17.]050 and [49.17.]060. WSR 96-22-048, § 296-306A-36851, filed 10/31/96, effective 12/1/96.]

WAC 296-307-36854 What requirements apply to wiring for capacitors? (1) All capacitors, except surge capacitors or capacitors included as a component part of other apparatus, must have an automatic means of draining the stored charge after the capacitor is disconnected from its source of supply.

(2) Capacitors rated over 600 volts, nominal, must meet the following additional requirements:

(a) Isolating or disconnecting switches (with no interrupting rating) must be interlocked with the load interrupting device or must have prominently displayed caution signs to prevent switching load current.

(b) For series capacitors, the proper switching must be ensured by any of the following:

(i) Mechanically sequenced isolating and bypass switches;

(ii) Interlocks; or

(iii) Switching procedure prominently displayed at the switching location.

[WSR 97-09-013, recodified as § 296-307-36854, filed 4/7/97, effective 4/7/97. Statutory Authority: RCW 49.17.040, [49.17.]050 and [49.17.]060. WSR 96-22-048, § 296-306A-36854, filed 10/31/96, effective 12/1/96.]

WAC 296-307-36857 How must storage batteries be ventilated? You must ensure that there is sufficient diffusion and ventilation of gases from storage batteries to prevent the accumulation of explosive mixtures.

[WSR 97-09-013, recodified as § 296-307-36857, filed 4/7/97, effective 4/7/97. Statutory Authority: RCW 49.17.040, [49.17.]050 and [49.17.]060. WSR 96-22-048, § 296-306A-36857, filed 10/31/96, effective 12/1/96.]

WAC 296-307-36860 What other miscellaneous requirements apply to wiring methods? (1) Metal raceways, cable armor, and other metal enclosures for conductors must be metallically joined into a continuous electric conductor and must be connected to all boxes, fittings, and cabinets to provide effective electrical continuity.

(2) All wiring systems are prohibited from being installed in ducts used to transport dust, loose stock or flammable vapors. All wiring system are prohibited from being installed in any duct used for vapor removal or for ventilation of commercial-type cooking equipment, or in any shaft containing only such ducts.

[WSR 97-09-013, recodified as § 296-307-36860, filed 4/7/97, effective 4/7/97. Statutory Authority: RCW 49.17.040, [49.17.]050 and [49.17.]060. WSR 96-22-048, § 296-306A-36860, filed 10/31/96, effective 12/1/96.]

WAC 296-307-370 Special purpose equipment and installations.

[WSR 97-09-013, recodified as § 296-307-370, filed 4/7/97, effective 4/7/97. Statutory Authority: RCW 49.17.040, [49.17.]050 and [49.17.]060. WSR 96-22-048, § 296-306A-370, filed 10/31/96, effective 12/1/96.]

WAC 296-307-37003 What requirements apply to cranes, hoists, and runways? The installation of electric equipment and wiring used with cranes, monorail hoists, hoists, and all runways must meet the following requirements:

(1) Disconnecting means must meet the following requirements:

(a) A readily accessible disconnecting means is provided between the runway contact conductors and the power supply.

(b) Another disconnecting means, capable of being locked in the open position, is provided in the leads from the runway contact conductors or other power supply on any crane or monorail hoist.

(i) If this additional disconnection means is not readily accessible from the crane or monorail hoist operating station, means is provided at the operating station, to open the power circuit to all motors of the crane or monorail hoist.

(ii) The additional disconnect may be omitted if a monorail hoist or hand-propelled crane bridge installation meets all of the following:

(A) The unit is floor controlled;

(B) The unit is within view of the power supply disconnecting means; and

(C) No fixed work platform has been provided for servicing the unit.

(2) A limit switch or other device shall be provided to prevent the load block from passing the safe upper limit of travel of any hoisting mechanism.

(3) The dimension of the working space in the direction of access to live parts that may require examination, adjustment, servicing, or maintenance while alive must be a minimum of 2 feet 6 inches. Where controls are enclosed in cabinets, the door must either open at least 90 degrees or be removable.

[WSR 97-09-013, recodified as § 296-307-37003, filed 4/7/97, effective 4/7/97. Statutory Authority: RCW 49.17.040, [49.17.]050 and [49.17.]060. WSR 96-22-048, § 296-306A-37003, filed 10/31/96, effective 12/1/96.]

WAC 296-307-37006 What requirements apply to elevators, dumbwaiters, escalators, and moving walks? (1) Elevators, dumbwaiters, escalators, and moving walks must have a single means for disconnecting all ungrounded main power supply conductors for each unit.

(2) If interconnections between control panels are necessary for operation of the system on a multicar installation that remains energized from a source other than the disconnecting means, a warning sign must be mounted on or adjacent to the disconnecting means. The sign must be clearly legible and shall read "Warning—Parts of the control panel are not deenergized by this switch."

(3) If control panels are not located in the same space as the drive machine, they must be located in cabinets with doors or panels capable of being locked closed.

[WSR 97-09-013, recodified as § 296-307-37006, filed 4/7/97, effective 4/7/97. Statutory Authority: RCW 49.17.040, [49.17.]050 and [49.17.]060. WSR 96-22-048, § 296-306A-37006, filed 10/31/96, effective 12/1/96.]

WAC 296-307-37009 What requirements apply to the disconnecting means for electric welders? (1) A disconnecting means must be provided in the supply circuit for each motor-generator arc welder, and for each AC transformer and DC rectifier arc welder that is not equipped with a disconnect mounted as an integral part of the welder.

(2) A switch or circuit breaker must be provided by which each resistance welder and its control equipment can be isolated from the supply circuit. The ampere rating of this disconnecting means must not be less than the supply conductor ampacity.

[WSR 97-09-013, recodified as § 296-307-37009, filed 4/7/97, effective 4/7/97. Statutory Authority: RCW 49.17.040, [49.17.]050 and [49.17.]060. WSR 96-22-048, § 296-306A-37009, filed 10/31/96, effective 12/1/96.]

WAC 296-307-37012 What requirements apply to electrically driven or controlled irrigation machines? (1) If an electrically driven or controlled irrigation machine has a stationary point, a driven ground rod must be connected to the machine at the stationary point for lightning protection.

(2) The main disconnecting means for a center pivot irrigation machine must be located at the point of connection of electrical power to the machine and must be readily accessible and capable of being locked in the open position. A disconnecting means must be provided for each motor and controller.

[WSR 97-09-013, recodified as § 296-307-37012, filed 4/7/97, effective 4/7/97. Statutory Authority: RCW 49.17.040, [49.17.]050 and [49.17.]060. WSR 96-22-048, § 296-306A-37012, filed 10/31/96, effective 12/1/96.]

WAC 296-307-372 Hazardous (classified) locations.

[WSR 97-09-013, recodified as § 296-307-372, filed 4/7/97, effective 4/7/97. Statutory Authority: RCW 49.17.040, [49.17.]050 and [49.17.]060. WSR 96-22-048, § 296-306A-372, filed 10/31/96, effective 12/1/96.]

WAC 296-307-37203 What does this section cover? WAC 296-307-372 covers the requirements for electric equipment and wiring in locations that are classified based on the properties of the flammable vapors, liquids or gases, or combustible dusts or fibers that may be present and the likelihood that a flammable combustible concentration or quantity is present. Each room, section, or area must be considered individually to determine its classification.

All requirements in this part apply to hazardous locations, unless otherwise indicated.

[Statutory Authority: RCW 49.17.040. WSR 98-24-096, § 296-307-37203, filed 12/1/98, effective 3/1/99. WSR 97-09-013, recodified as § 296-307-

37203, filed 4/7/97, effective 4/7/97. Statutory Authority: RCW 49.17.040, [49.17.]050 and [49.17.]060. WSR 96-22-048, § 296-306A-37203, filed 10/31/96, effective 12/1/96.]

WAC 296-307-37206 What classifications apply to this section? These hazardous locations are classified as follows:

(1) "Class I locations" are those in which flammable gases or vapors are or may be present in the air in quantities sufficient to produce explosive or ignitable mixtures. They include the following:

(a) Class I, Division 1 locations are those where:

(i) Hazardous concentrations of flammable gases or vapors may exist under normal operating conditions; or

(ii) Hazardous concentrations of such gases or vapors may exist frequently because of repair or maintenance operations or because of leakage; or

(iii) Breakdown or faulty operation of equipment or processes might release hazardous concentrations of flammable gases or vapors, and might also cause simultaneous failure of electric equipment.

This classification usually includes locations where:

• Volatile flammable liquids or liquefied flammable gases are transferred from one container to another;

• Interiors of spray booths and areas in the vicinity of spraying and painting operations where volatile flammable solvents are used;

• Locations containing open tanks or vats of volatile flammable liquids;

• Drying rooms or compartments for the evaporation of flammable solvents;

• Locations containing fat and oil extraction equipment using volatile flammable solvents;

• Gas generator rooms and other portions of gas manufacturing plants where flammable gas may escape;

• Inadequately ventilated pump rooms for flammable gas or for volatile flammable liquids;

• The interiors of refrigerators and freezers in which volatile flammable materials are stored in open, lightly stoppered, or easily ruptured containers; and

• All other locations where ignitable concentrations of flammable vapors or gases are likely to occur in the course of normal operations.

(b) Class I, Division 2 locations are those where:

(i) Volatile flammable liquids or flammable gases are handled, processed, or used, but in which the hazardous liquids, vapors, or gases are normally confined within closed containers or systems from which they can escape only in an accidental rupture or breakdown of containers or systems, or in case of abnormal operation of equipment; or

(ii) Hazardous concentrations of gases or vapors are normally prevented by positive mechanical ventilation, and which might become hazardous through failure or abnormal operation of the ventilating equipment; or

(iii) They are adjacent to a Class I, Division 1 location, and to which hazardous concentrations of gases or vapors might occasionally be communicated unless prevented by adequate positive-pressure ventilation from a source of clean air, and effective safeguards against ventilation failure are provided.

This classification usually includes locations where:

• Volatile flammable liquids or flammable gases or vapors are used, but which would become hazardous only in case of an accident or unusual operating condition. The quantity of flammable material that might escape in case of accident, the adequacy of ventilating equipment, the total area involved, and the record of the industry or business with respect to explosions or fires are all factors to consider in determining the classification.

• Piping without valves, checks, meters, and similar devices would not ordinarily introduce a hazardous condition even though used for flammable liquids or gases. Locations used for the storage of flammable liquids or a liquefied or compressed gases in sealed containers are not normally considered hazardous unless also subject to other hazardous conditions.

• Electrical conduits and their enclosures separated from process fluids by a single seal or barrier are Division 2 locations if the outside of the conduit and enclosures is a nonhazardous location.

(2) "Class II locations" are those that are hazardous because of the presence of combustible dust. They include the following:

(a) Class II, Division 1 locations are those where:

(i) Combustible dust is or may be suspended in the air under normal operating conditions, in quantities sufficient to produce explosives or ignitable mixtures; or

(ii) Mechanical failure or abnormal operation of machinery or equipment might produce explosive or ignitable, and might also provide a source of ignition through simultaneous failure of electric equipment, operation of protection devices, or from other causes; or

(iii) Combustible dusts of an electrically conductive nature may be present.

This classification may include areas of grain handling and processing plants, starch plants, sugar-pulverizing plants, malting plants, hay-grinding plants, coal pulverizing plants, areas where metal dusts and powders are produced or processed, and other similar locations that contain dust producing machinery and equipment (except where the equipment is dust-tight or vented to the outside). These areas would have combustible dust in the air, under normal operating conditions, in quantities sufficient to produce explosive or ignitable mixtures.

Combustible dusts that are electrically nonconductive include dusts produced in the handling and processing of grain and grain products, pulverized sugar and cocoa, dried egg and milk powders, pulverized spices, starch and pastes, potato and wood flour, oil meal from beans and seed, dried hay, and other organic materials that may produce combustible dusts when processed or handled. Dusts containing magnesium or aluminum are particularly hazardous and the use of extreme caution is necessary to avoid ignition and explosion.

(b) Class II, Division 2 location are those where:

(i) Combustible dust is not normally suspended in the air in quantities sufficient to produce explosive or ignitable mixtures; and dust accumulations are normally insufficient to interfere with the normal operation of electrical equipment or other apparatus; or

(ii) Dust may be in suspension in the air as a result of infrequent malfunctioning of handling or processing equip-

ment, and resulting dust accumulations may be ignitable by abnormal operation or failure of electrical equipment or other apparatus.

This classification includes locations where dangerous concentrations of suspended dust would not be likely but where dust accumulations might form on or in the vicinity of electric equipment. These areas may contain equipment from which appreciable quantities of dust would escape under abnormal operating conditions or be adjacent to a Class II Division 1 location into which an explosive or ignitable concentration of dust may be suspended under abnormal operating conditions.

(3) "Class III locations" are those that are hazardous because of the presence of easily ignitable fibers or flyings but in which such fibers or flyings are not likely to be suspended in the air in quantities sufficient to produce ignitable mixtures. They include the following:

(a) Class III, Division 1 locations are those where easily ignitable fibers or materials producing combustible flyings are handled, manufactured, or used.

Such locations usually include combustible fiber manufacturing and processing plants; cotton gins and cottonseed mills; flax-processing plants; and industries involving similar hazardous processes or conditions.

Easily ignitable fibers and flyings include rayon, cotton (including cotton linters and cotton waste), sisal or henequen, istle, jute, hemp, tow, cocoa fiber, oakum, baled waste kapok, Spanish moss, excelsior, and other materials of similar nature.

(b) Class III, Division 2 locations are those where easily ignitable fibers are stored or handled, except in process of manufacture.

[WSR 97-09-013, recodified as § 296-307-37206, filed 4/7/97, effective 4/7/97. Statutory Authority: RCW 49.17.040, [49.17.]050 and [49.17.]060. WSR 96-22-048, § 296-306A-37206, filed 10/31/96, effective 12/1/96.]

WAC 296-307-37209 What equipment, wiring methods, and installations may be used in hazardous locations? Equipment, wiring methods, and installations of equipment in hazardous locations must be intrinsically safe, or approved for the hazardous location, or safe for the hazardous location. Requirements for each of these options are as follows:

(1) Equipment and associated wiring approved as intrinsically safe are permitted in any hazardous location for which it is approved.

(2) Requirements to be approved for the hazardous location:

(a) Equipment must be approved for the class of location and for the ignitable or combustible properties of the specific gas, vapor, dust, or fiber that will be present.

(b) Equipment must be marked to show the class, group, and operating temperature or temperature range, based on operation in a 40 degrees C ambient, for which it is approved. The temperature marking must be a maximum of the ignition temperature of the specific gas or vapor to be encountered. The following provisions apply to specific equipment:

(i) Nonheat-producing equipment, such as junction boxes, conduit, and fittings, and heat-producing equipment with a maximum temperature of 100 degrees C (212 degrees F) need not have a marked operating temperature or temperature range.

(ii) Fixed lighting fixtures marked for use in Class I, Division 2 locations only, need not be marked to indicate the group.

(iii) Fixed general-purpose equipment in Class I locations (other than lighting fixtures) that is acceptable for use in Class I, Division 2 locations need not be marked with the class, group, division, or operating temperature.

(iv) Fixed dust-tight equipment (other than lighting fixtures) that is acceptable for use in Class II, Division 2 and Class III locations need not be marked with the class, group, division, or operating temperature.

(3) Equipment that is safe for the location shall be of a type and design that provides protection from the hazards arising from combustible and flammable vapors, liquids, gases, dusts, or fibers.

Note: Equipment that meets the requirements of The National Electrical Code, NFPA 70, shall be considered in compliance with the requirements of WAC 296-307-372.

[Statutory Authority: RCW 49.17.040. WSR 98-24-096, § 296-307-37209, filed 12/1/98, effective 3/1/99. WSR 97-09-013, recodified as § 296-307-37209, filed 4/7/97, effective 4/7/97. Statutory Authority: RCW 49.17.040, [49.17.]050 and [49.17.]060. WSR 96-22-048, § 296-306A-37209, filed 10/31/96, effective 12/1/96.]

WAC 296-307-37212 How must conduit be installed in hazardous locations? All conduits must be threaded and wrench-tight. Where it is impractical to make a threaded joint tight, a bonding jumper must be used.

[WSR 97-09-013, recodified as § 296-307-37212, filed 4/7/97, effective 4/7/97. Statutory Authority: RCW 49.17.040, [49.17.]050 and [49.17.]060. WSR 96-22-048, § 296-306A-37212, filed 10/31/96, effective 12/1/96.]

WAC 296-307-37215 Which equipment may be used in Division 1 and 2 locations? Equipment that has been approved for a Division 1 location may be installed in a Division 2 location of the same class and group. General-purpose equipment or equipment in general-purpose enclosures may be installed in Division 2 locations if the equipment does not constitute a source of ignition under normal operating conditions.

[WSR 97-09-013, recodified as § 296-307-37215, filed 4/7/97, effective 4/7/97. Statutory Authority: RCW 49.17.040, [49.17.]050 and [49.17.]060. WSR 96-22-048, § 296-306A-37215, filed 10/31/96, effective 12/1/96.]

WAC 296-307-37218 What requirements apply to motors and generators used in hazardous locations? In Class I, Division 1 locations, motors, generators and other rotating electric machinery must be:

(1) Approved for Class I, Division 1 locations (explosion-proof); or

(2) Of the totally enclosed type supplied with positive-pressure ventilation from a source of clean air with discharge to a safe area, arranged to prevent energizing of the machine until ventilation has been established and the enclosure has been purged with at least 10 volumes of air, and also arranged to automatically deenergize the equipment when the air supply fails; or

(3) Of the totally enclosed inert-gas-filled type supplied with a suitable reliable source of inert gas for pressuring the enclosure, with devices provided to ensure a positive pressure

in the enclosure and arranged to automatically deenergize the equipment when the gas supply fails; or

(4) Of a type designed to be submerged in a liquid that is flammable only when vaporized and mixed with air, or in a gas or vapor at a pressure greater than atmospheric and which is flammable only when mixed with air; and the machine is arranged to prevent energizing it until it has been purged with the liquid or gas to exclude air, and also arranged to automatically deenergize the equipment when the supply of liquid, or gas or vapor fails or the pressure is reduced to atmospheric.

Totally enclosed type (2) and (3) motors must have no external surface with a Celsius operating temperature greater than 80% of the ignition temperature of the gas or vapor involved, as determined by ASTM test procedure (Designation: D-2155-69). Appropriate devices must be provided to detect an increase in temperature of the motor beyond design limits and automatically deenergize the equipment or provide an adequate alarm. Auxiliary equipment must be approved for the location in which it is installed.

[WSR 97-09-013, recodified as § 296-307-37218, filed 4/7/97, effective 4/7/97. Statutory Authority: RCW 49.17.040, [49.17.]050 and [49.17.]060. WSR 96-22-048, § 296-306A-37218, filed 10/31/96, effective 12/1/96.]

WAC 296-307-374 Special systems.

[WSR 97-09-013, recodified as § 296-307-374, filed 4/7/97, effective 4/7/97. Statutory Authority: RCW 49.17.040, [49.17.]050 and [49.17.]060. WSR 96-22-048, § 296-306A-374, filed 10/31/96, effective 12/1/96.]

WAC 296-307-37403 What requirements apply to systems over 600 volts, nominal? (1) Wiring methods for fixed installations over 600 volts, nominal, must meet the following requirements:

(a) Above-ground conductors must be installed in rigid metal conduit, in intermediate metal conduit, in cable trays, in cablebus, in other suitable raceways, or as open runs of metal-clad cable suitable for the use and purpose. Open runs of nonmetallic-sheathed cable or of bare conductors or busbars must be installed in locations accessible only to qualified persons. Metallic shielding components, such as tapes, wires, or braids for conductors, must be grounded. Open runs of insulated wires and cables with a bare lead sheath or a braided outer covering must be supported to prevent physical damage to the braid or sheath.

(b) Conductors emerging from the ground must be enclosed in approved raceways.

(2) Interrupting and isolating devices must meet the following requirements:

(a) Circuit breaker installations located indoors must consist of metal-enclosed units or fire-resistant cell-mounted units. Circuit breakers must be open mounted only in locations that are accessible only to qualified persons. A means of indicating the open and closed position of circuit breakers must be provided.

(b) Fused cutouts installed in buildings or transformer vaults must be approved for the purpose. They must be readily accessible for fuse replacement.

(c) A means must be provided to completely isolate equipment for inspection and repairs. Isolating means that are not designed to interrupt the load current of the circuit must be either interlocked with an approved circuit interrupter or provided with a sign warning against opening them under load.

(3) Mobile and portable equipment must meet the following requirements:

(a) A metallic enclosure must be provided on the mobile machine for enclosing the terminals of the power cable. The enclosure must include provisions for a solid connection for the ground wire terminal to effectively ground the machine frame. The method of cable termination used must prevent any strain or pull on the cable from stressing the electrical connections. The enclosure must be lockable so only authorized qualified persons may open it and must be marked with a sign warning of the presence of energized parts.

(b) All energized switching and control parts must be enclosed in grounded metal cabinets or enclosures. Circuit breakers and protective equipment must have the operating means projecting through the metal cabinet or enclosure so these units can be reset without opening locked doors. Enclosures and metal cabinets must be locked so that only authorized qualified persons have access and must be marked with a sign warning of the presence of energized parts. Collector ring assemblies on revolving machines (shovels, draglines, etc.,) must be guarded.

(4) Tunnel installations of high-voltage power distribution and utilization equipment that is portable or mobile, such as substations, trailers, cars, mobile shovels, draglines, hoists, drills, dredges, compressors, pumps, conveyors, and underground excavators must meet the following requirements:

(a) Conductors in tunnels must be installed in one or more of the following:

(i) Metal conduit or other metal raceway;

(ii) Type MC cable; or

(iii) Other approved multiconductor cable.

Conductors must also be located or guarded to protect them from physical damage. Multiconductor portable cable may supply mobile equipment. An equipment grounding conductor must be run with circuit conductors inside the metal raceway or inside the multiconductor cable jacket. The equipment grounding conductor may be insulated or bare.

(b) Bare terminals of transformers, switches, motor controllers, and other equipment must be enclosed to prevent accidental contact with energized parts. Enclosures used in tunnels must be drip-proof, weatherproof, or submersible as required by environmental conditions.

(c) A disconnecting means that simultaneously opens all ungrounded conductors must be installed at each transformer or motor location.

(d) All nonenergized metal parts of electric equipment and metal raceways and cable sheaths must be effectively grounded and bonded to all metal pipes and rails at the portal and at maximum intervals of 1000 feet throughout the tunnel.

[WSR 97-09-013, recodified as § 296-307-37403, filed 4/7/97, effective 4/7/97. Statutory Authority: RCW 49.17.040, [49.17.]050 and [49.17.]060. WSR 96-22-048, § 296-306A-37403, filed 10/31/96, effective 12/1/96.]

WAC 296-307-37406 What requirements apply to emergency power systems? This section applies to circuits, systems, and equipment intended to supply power for illumination and special loads, in the event of failure of the normal supply.

(1) Emergency circuit wiring must be kept entirely independent of all other wiring and equipment and must not enter the same raceway, cable, box, or cabinet as other wiring.

Exception: This does not apply where common circuit elements suitable for the purpose are required, or for transferring power from the normal to the emergency source.

(2) Where emergency lighting is necessary, the system must be arranged so that the failure of any individual lighting element, such as a burned out light bulb, cannot leave any space in total darkness.

[WSR 97-09-013, recodified as § 296-307-37406, filed 4/7/97, effective 4/7/97. Statutory Authority: RCW 49.17.040, [49.17.]050 and [49.17.]060. WSR 96-22-048, § 296-306A-37406, filed 10/31/96, effective 12/1/96.]

WAC 296-307-37409 How are Class 1, Class 2, and Class 3 remote control, signaling, and power-limited circuits classified? (1) Class 1, Class 2, or Class 3 remote control, signaling, or power-limited circuits are characterized by their usage and electrical power limitation which differentiates them from light and power circuits. These circuits are classified according to their voltage and power limitations as follows.

(a) Class 1 circuits.

(i) A Class 1 power-limited circuit is supplied from a source with a maximum rated output of 30 volts and 1000 volt-amperes.

(ii) A Class 1 remote control circuit or a Class 1 signaling circuit has a maximum voltage of 600 volts; however, the power output of the source need not be limited.

(b) Class 2 and Class 3 circuits.

(i) Power for Class 2 and Class 3 circuits is limited either inherently (in which no overcurrent protection is required) or by a combination of a power source and overcurrent protection.

(ii) The maximum circuit voltage is 150 volts AC or DC for a Class 2 inherently limited power source, and 100 volts AC or DC for a Class 3 inherently limited power source.

(iii) The maximum circuit voltage is 30 volts AC and 60 volts DC for a Class 2 power source limited by overcurrent protection, and 150 volts AC or DC for a Class 3 power source limited by overcurrent protection.

(c) The maximum circuit voltages in (a) and (b) of this subsection apply to sinusoidal AC or continuous DC power sources, and where wet contact is unlikely.

(2) A Class 2 or Class 3 power supply unit must be durably and visibly marked to indicate the class of supply and its electrical rating.

[WSR 97-09-013, recodified as § 296-307-37409, filed 4/7/97, effective 4/7/97. Statutory Authority: RCW 49.17.040, [49.17.]050 and [49.17.]060. WSR 96-22-048, § 296-306A-37409, filed 10/31/96, effective 12/1/96.]

WAC 296-307-37412 What requirements apply to fire protective signaling systems? (1) Fire protective signaling circuits must be classified either as nonpower limited or power limited.

(2) The power sources for use with fire protective signaling circuits must be either power limited or nonlimited as follows:

(a) The power supply of nonpower-limited fire protective signaling circuits must have a maximum output voltage of 600 volts.

(b) The power for power-limited fire protective signaling circuits must be either inherently limited, in which no overcurrent protection is required, or limited by a combination of power source and overcurrent protection.

(3) Nonpower-limited fire protective signaling circuits and Class 1 circuits may occupy the same enclosure, cable, or raceway if all conductors are insulated for maximum voltage of any conductor within the enclosure, cable or raceway. Power supply and fire protective signaling circuit conductors are permitted in the same enclosure, cable, or raceway only if connected to the same equipment.

(4) Where open conductors are installed, power-limited fire protective signaling circuits must be separated at least 2 inches from conductors of any light, power, Class 1, and nonpower-limited fire protective signaling circuits unless using a special and equally protective method of conductor separation. Cables and conductors of two or more power-limited fire protective signaling circuits or Class 3 circuits are permitted in the same cable, enclosure, or raceway. Conductors of one or more Class 2 circuits are permitted within the same cable, enclosure, or raceway with conductors of power-limited fire protective signaling circuits if the insulation of Class 2 circuit conductors in the cable, enclosure, or raceway is at least that needed for the power-limited fire protective signaling circuits.

(5) Fire protective signaling circuits must be identified at terminal and junction locations in a manner that will prevent unintentional interference with the signaling circuit during testing and servicing. Power-limited fire protective signaling circuits must be visibly and durably marked at terminations.

[WSR 97-09-013, recodified as § 296-307-37412, filed 4/7/97, effective 4/7/97. Statutory Authority: RCW 49.17.040, [49.17.]050 and [49.17.]060. WSR 96-22-048, § 296-306A-37412, filed 10/31/96, effective 12/1/96.]

WAC 296-307-376 Working on or near exposed energized parts.

[WSR 97-09-013, recodified as § 296-307-376, filed 4/7/97, effective 4/7/97. Statutory Authority: RCW 49.17.040, [49.17.]050 and [49.17.]060. WSR 96-22-048, § 296-306A-376, filed 10/31/96, effective 12/1/96.]

WAC 296-307-37603 What does this section cover? WAC 296-307-376 applies to work performed on exposed live parts (involving either direct contact or contact by means of tools or materials) or near enough to them for employees to be exposed to any hazard they present.

[Statutory Authority: RCW 49.17.040. WSR 98-24-096, § 296-307-37603, filed 12/1/98, effective 3/1/99. WSR 97-09-013, recodified as § 296-307-37603, filed 4/7/97, effective 4/7/97. Statutory Authority: RCW 49.17.040, [49.17.]050 and [49.17.]060. WSR 96-22-048, § 296-306A-37603, filed 10/31/96, effective 12/1/96.]

WAC 296-307-37606 Who may work on energized parts? Only qualified persons may work on electric circuit parts of equipment that have not been deenergized under the procedures of WAC 296-307-37807. Qualified persons must be capable of working safely on energized circuits and must be familiar with the proper use of special precautionary techniques, personal protective equipment, insulating and shielding materials, and insulated tools.

[Statutory Authority: RCW 49.17.040. WSR 98-24-096, § 296-307-37606, filed 12/1/98, effective 3/1/99. WSR 97-09-013, recodified as § 296-307-37606, filed 4/7/97, effective 4/7/97. Statutory Authority: RCW 49.17.040,

[49.17.]050 and [49.17.]060. WSR 96-22-048, § 296-306A-37606, filed 10/31/96, effective 12/1/96.]

WAC 296-307-37609 What requirements apply to working near low voltage lines? When employees are working near energized electrical service conductors operating at 750 volts or less, employees must work in a manner to prevent contact with the energized conductors.

[WSR 97-09-013, recodified as § 296-307-37609, filed 4/7/97, effective 4/7/97. Statutory Authority: RCW 49.17.040, [49.17.]050 and [49.17.]060. WSR 96-22-048, § 296-306A-37609, filed 10/31/96, effective 12/1/96.]

WAC 296-307-37612 What requirements apply to qualified persons working near overhead lines? When a qualified person is working near overhead lines, whether in an elevated position or on the ground, the person must not approach, or take any conductive object without an approved insulating handle, closer to exposed energized parts than shown in WAC 296-307-150 unless:

(1) The person is insulated from the energized part (gloves, with sleeves if necessary, rated for the voltage involved are considered to be insulation of the person from the energized part on which work is performed); or

(2) The energized part is insulated both from all other conductive objects at a different potential and from the person; or

(3) The person is insulated from all conductive objects at a potential different from that of the energized part.

[Statutory Authority: RCW 49.17.040. WSR 98-24-096, § 296-307-37612, filed 12/1/98, effective 3/1/99. WSR 97-09-013, recodified as § 296-307-37612, filed 4/7/97, effective 4/7/97. Statutory Authority: RCW 49.17.040, [49.17.]050 and [49.17.]060. WSR 96-22-048, § 296-306A-37612, filed 10/31/96, effective 12/1/96.]

WAC 296-307-37615 What requirements apply to vehicles and mechanical equipment near overhead lines? (1) Any vehicle or mechanical equipment that may have parts of its structure elevated near energized overhead lines must be operated so that a clearance of 10 ft. is maintained. If the voltage is higher than 50kV, the clearance must be increased 0.4 inch for every 1kV over the voltage. The clearance may be reduced only if:

(a) The vehicle is in transit with its structure lowered, the clearance may be reduced to 4 ft. If the voltage is higher than 50kV, the clearance must be increased 0.4 inch for every 1kV over that voltage.

(b) Insulating barriers are installed to prevent contact with the lines, and if the barriers are rated for the voltage of the line being guarded and are not a part of or an attachment to the vehicle or its raised structure, the clearance may be reduced to a distance within the designed working dimensions of the insulating barrier.

(2) If the equipment is an aerial lift insulated for the voltage involved, and if the work is performed by a qualified person, the clearance (between the uninsulated portion of the aerial lift and the power line) may be reduced to the distance given in WAC 296-307-150.

(3) Employees standing on the ground must not contact the vehicle or mechanical equipment or any of its attachments, unless:

(a) The employee is using protective equipment rated for the voltage; or

(b) The equipment is located so that no uninsulated part of its structure (that portion of the structure that provides a conductive path to employees on the ground) can come closer to the line than permitted in this section.

(4) If any vehicle or mechanical equipment that may have parts of its structure elevated near energized overhead lines is intentionally grounded, employees working on the ground near the point of grounding must not stand at the grounding location whenever there is a possibility of overhead line contact. Additional precautions, such as the use of barricades or insulation, must be taken to protect employees from hazardous ground potentials, depending on earth resistivity and fault currents, which can develop within the first few feet or more outward from the grounding point.

[Statutory Authority: RCW 49.17.040. WSR 98-24-096, § 296-307-37615, filed 12/1/98, effective 3/1/99. WSR 97-09-013, recodified as § 296-307-37615, filed 4/7/97, effective 4/7/97. Statutory Authority: RCW 49.17.040, [49.17.]050 and [49.17.]060. WSR 96-22-048, § 296-306A-37615, filed 10/31/96, effective 12/1/96.]

WAC 296-307-37618 What lighting must be provided for employees working near exposed energized parts? (1) Employees must not enter spaces containing exposed energized parts, unless lighting is provided that enables the employees to perform the work safely.

(2) Where lack of lighting or an obstruction prevents an employee from seeing the work to be performed, employees must not perform tasks near exposed energized parts. Employees shall not reach blindly into areas that may contain energized parts.

[WSR 97-09-013, recodified as § 296-307-37618, filed 4/7/97, effective 4/7/97. Statutory Authority: RCW 49.17.040, [49.17.]050 and [49.17.]060. WSR 96-22-048, § 296-306A-37618, filed 10/31/96, effective 12/1/96.]

WAC 296-307-37621 What requirements apply to working near exposed energized parts in confined spaces? (1) For working in a confined or enclosed space (such as a manhole or vault) that contains exposed energized parts, the employer shall provide, and the employee must use, protective shields, protective barriers, or insulating materials that are necessary to avoid contact with these parts. Doors, hinged panels, and the like must be secured to prevent swinging into an employee and causing the employee to contact exposed energized parts.

(2) Conductive materials and equipment that are in contact with any part of an employee's body shall be handled in a manner that will prevent them from contacting exposed energized conductors or circuit parts. If an employee handles long conductive objects (such as ducts and pipes) in areas with exposed live parts, you must institute work practices (such as the use of insulation, guarding, and material handling techniques) that will minimize the hazard.

(3) Portable ladders must have nonconductive siderails if they are used where the employee or the ladder could contact exposed energized parts.

(4) Conductive articles of jewelry and clothing shall not be worn if they might contact exposed energized parts.

[WSR 97-09-013, recodified as § 296-307-37621, filed 4/7/97, effective 4/7/97. Statutory Authority: RCW 49.17.040, [49.17.]050 and [49.17.]060. WSR 96-22-048, § 296-306A-37621, filed 10/31/96, effective 12/1/96.]

WAC 296-307-37624 What housekeeping requirements apply to working near exposed energized parts? (1) Where live parts present an electrical contact hazard, employees must not perform housekeeping duties near enough to the parts that there is a possibility of contact, unless adequate safeguards (such as insulating equipment or barriers) are provided.

(2) Electrically conductive cleaning materials (including conductive solids such as steel wool, metalized cloth, and silicon carbide, as well as conductive liquid solutions) must not be used in proximity to energized parts unless procedures are followed that will prevent electrical contact.

[WSR 97-09-013, recodified as § 296-307-37624, filed 4/7/97, effective 4/7/97. Statutory Authority: RCW 49.17.040, [49.17.]050 and [49.17.]060. WSR 96-22-048, § 296-306A-37624, filed 10/31/96, effective 12/1/96.]

WAC 296-307-37627 Who may defeat an electrical safety interlock? Only a qualified person following the requirements of this section may defeat an electrical safety interlock, and then only temporarily while he or she is working on the equipment. The interlock system must be returned to its operable condition when this work is completed.

[WSR 97-09-013, recodified as § 296-307-37627, filed 4/7/97, effective 4/7/97. Statutory Authority: RCW 49.17.040, [49.17.]050 and [49.17.]060. WSR 96-22-048, § 296-306A-37627, filed 10/31/96, effective 12/1/96.]

WAC 296-307-378 Safety-related work practices.

[WSR 97-09-013, recodified as § 296-307-378, filed 4/7/97, effective 4/7/97. Statutory Authority: RCW 49.17.040, [49.17.]050 and [49.17.]060. WSR 96-22-048, § 296-306A-378, filed 10/31/96, effective 12/1/96.]

WAC 296-307-37801 What does this section cover? (1) WAC 296-307-376 and 296-307-378 cover electrical safety-related work practices for both qualified persons (those who have training in avoiding the electrical hazards of working on or near exposed energized parts) and unqualified persons (those with little or no such training) working on, near, or with the following installations:

(a) Installations of electric conductors and equipment within or on buildings or other structures, and on other premises such as yards, parking, and other lots, and industrial substations;

(b) Installations of conductors that connect to the supply of electricity;

(c) Installations of other outside conductors on the premises; and

(d) Installations of optical fiber cable where such installations are made along with electric conductors.

(2) WAC 296-307-367 and 296-307-378 cover work performed by unqualified persons on, near, or with the installations listed in subsection (3) of this section.

(3) WAC 296-307-376 and 296-307-378 do not apply to work performed by qualified persons on or directly associated with the following installations:

(a) Installations for the generation, control, transformation, transmission, and distribution of electric energy (including communication and metering) located in buildings used for such purposes or located outdoors.

Work on or directly associated with generation, transmission, or distribution installations includes:

(i) Work performed directly on installations, such as repairing distribution lines or repairing a feed-water pump for the boiler in a generating plant.

(ii) Work directly associated with installations, such as line-clearance tree trimming and replacing utility poles.

(iii) Work on electric utilization circuits in a generating plant where:

• The circuits are combined with installations of power generation equipment or circuits; and

• The generation equipment or circuits present greater electrical hazards than those posed by the utilization equipment or circuits (such as exposure to higher voltages or lack of overcurrent protection).

(b) Installations in watercraft, railway rolling stock, aircraft, or automotive vehicles other than mobile homes and recreational vehicles.

(c) Installations of railways for generation, transformation, transmission, or distribution of power used exclusively for operation of rolling stock or installations of railways used exclusively for signaling and communication purposes.

[Statutory Authority: RCW 49.17.040. WSR 98-24-096, § 296-307-37801, filed 12/1/98, effective 3/1/99. WSR 97-09-013, recodified as § 296-307-37801, filed 4/7/97, effective 4/7/97. Statutory Authority: RCW 49.17.040, [49.17.]050 and [49.17.]060. WSR 96-22-048, § 296-306A-37801, filed 10/31/96, effective 12/1/96.]

WAC 296-307-37803 How must employees be trained on safety practices? (1) The training requirements in this section apply to employees who face a risk of electrical shock that is not reduced to a safe level by the electrical installation requirements of WAC 296-307-362 through 296-307-374.

(2) Training contents must include the following:

(a) Employees must be trained in and familiar with the safety-related work practices required by WAC 296-307-376 through 296-307-378 that apply to their job assignments.

(b) Employees who are covered by this section but who are not qualified persons must also be trained in and familiar with any electrically related safety practices that are not covered by this standard, but that are necessary for their safety.

(c) Qualified persons must, at a minimum, be trained in and familiar with the following:

(i) The skills and techniques necessary to distinguish exposed live parts from other parts of electric equipment;

(ii) The skills and techniques necessary to determine the nominal voltage of exposed live parts; and

(iii) The clearance distance specified in WAC 296-307-376 and the corresponding voltages to which the qualified person will be exposed.

Note 1: For the purposes of WAC 296-307-376 and 296-307-378, an employee must have the training required for a qualified person in order to be considered a qualified person.

Note 2: Qualified persons whose work on energized equipment involves either direct contact or contact by means of tools or materials must also have the training needed to meet WAC 296-307-376.

(3) You must provide either classroom or on-the-job training. The degree of training provided must be determined by the risk to the employee.

[Statutory Authority: RCW 49.17.040. WSR 98-24-096, § 296-307-37803, filed 12/1/98, effective 3/1/99. WSR 97-09-013, recodified as § 296-307-37803, filed 4/7/97, effective 4/7/97. Statutory Authority: RCW 49.17.040,

[49.17.]050 and [49.17.]060. WSR 96-22-048, § 296-306A-37803, filed 10/31/96, effective 12/1/96.]

WAC 296-307-37805 How must safety-related work practices be chosen and used? Safety-related work practices must be used to prevent electric shock or other injuries resulting from either direct or indirect electrical contacts, when work is performed near or on equipment or circuits that are or may be energized. The specific safety-related work practices must be consistent with the nature and extent of the associated electrical hazards.

(1) When an employee may be exposed to live parts, they must be deenergized before the employee works on or near them, unless deenergizing introduces other hazards or is infeasible due to equipment design or operational limitations. Live parts that operate at less than 50 volts to ground need not be deenergized if there will be no increased exposure to electrical burns or to explosion due to electric arcs.

Note 1: Examples of other hazards include deactivation of emergency alarm systems, shutdown of hazardous location ventilation equipment, or removal of illumination for an area.

Note 2: An example of work that may be performed on or near energized circuit parts because of unfeasibility due to equipment design or operational limitations is testing of electric circuits that can only be performed with the circuit energized.

(2) If the exposed live parts are not deenergized (for reasons of increased or additional hazards or unfeasibility), other safety-related work practices must be used to protect employees who may be exposed to the electrical hazards involved. Such work practices must protect employees against contact with energized circuit parts directly with any part of their body or indirectly through some other conductive object. The work practices must be suitable for the voltage level of the exposed electric conductors or circuit parts.

[WSR 97-09-013, recodified as § 296-307-37805, filed 4/7/97, effective 4/7/97. Statutory Authority: RCW 49.17.040, [49.17.]050 and [49.17.]060. WSR 96-22-048, § 296-306A-37805, filed 10/31/96, effective 12/1/96.]

WAC 296-307-37807 What work practices must be followed for work on exposed deenergized parts? (1) This section applies to work on exposed deenergized parts or near enough to them to expose the employee to any electrical hazard they present. Conductors and parts of electric equipment that have been deenergized but have not been locked out or tagged must be treated as energized parts, and WAC 296-307-376 applies to work on or near them.

(2) While any employee is exposed to contact with parts of fixed electric equipment or circuits which have been deenergized, the circuits energizing the parts must be locked out or tagged or both according to the requirements of this section. The requirements must be followed in the order in which they are presented.

"Fixed equipment" means equipment that is fastened or connected by permanent wiring methods.

Note: Lockout and tagging procedures that comply with WAC 296-307-320 will also be deemed to comply with WAC 296-307-37807 through 296-307-37817 if:

- The procedures address the electrical safety hazards covered by this part; and
- The procedures include the requirements of WAC 296-307-37813(4) and 296-307-37815(2).

[Statutory Authority: RCW 49.17.040. WSR 98-24-096, § 296-307-37807, filed 12/1/98, effective 3/1/99. WSR 97-09-013, recodified as § 296-307-37807, filed 4/7/97, effective 4/7/97. Statutory Authority: RCW 49.17.040, [49.17.]050 and [49.17.]060. WSR 96-22-048, § 296-306A-37807, filed 10/31/96, effective 12/1/96.]

WAC 296-307-37809 Must an employer have a written copy of lockout-tagout procedures? The employer must maintain a written copy of the procedures outlined in WAC 296-307-37807 through 296-307-37817 and must make it available for inspection by us or by employees. The written procedures may be in the form of a copy of WAC 296-307-37807 through 296-307-37817.

[Statutory Authority: RCW 49.17.040. WSR 98-24-096, § 296-307-37809, filed 12/1/98, effective 3/1/99. WSR 97-09-013, recodified as § 296-307-37809, filed 4/7/97, effective 4/7/97. Statutory Authority: RCW 49.17.040, [49.17.]050 and [49.17.]060. WSR 96-22-048, § 296-306A-37809, filed 10/31/96, effective 12/1/96.]

WAC 296-307-37811 What work practices must be followed for deenergizing equipment? (1) Safe procedures for deenergizing circuits and equipment must be determined before circuits or equipment are deenergized.

(2) The circuits and equipment to be worked on must be disconnected from all electric energy sources. Control circuit devices, such as push buttons, selector switches, and interlocks, must not be used as the sole means for deenergizing circuits or equipment. Interlocks for electric equipment must not be used as a substitute for lockout and tagging procedures.

(3) Stored electric energy which might endanger employees must be released. Capacitors must be discharged and high capacitance elements must be short-circuited and grounded, if the stored electric energy might endanger employees.

Note: Capacitors or associated equipment handled in meeting this requirement must be treated as energized.

(4) Stored nonelectrical energy in devices that could reenergize electric circuit parts must be blocked or relieved to the extent that the circuit parts could not be accidentally energized by the device.

[WSR 97-09-013, recodified as § 296-307-37811, filed 4/7/97, effective 4/7/97. Statutory Authority: RCW 49.17.040, [49.17.]050 and [49.17.]060. WSR 96-22-048, § 296-306A-37811, filed 10/31/96, effective 12/1/96.]

WAC 296-307-37813 How must locks and tags be applied? (1) A lock and a tag must be placed on each disconnecting means used to deenergize circuits and equipment on which work is to be performed, except as provided in subsections (3) and (5) of this section. The lock must be attached to prevent anyone from operating the disconnecting means unless they resort to undue force or the use of tools.

(2) Each tag must have a statement prohibiting unauthorized operation of the disconnecting means and removal of the tag.

(3) If a lock cannot be applied, or if tagging procedures will provide a level of safety equivalent to that obtained by the use of a lock, a tag may be used without a lock.

(4) A tag used without a lock must be supplemented by at least one additional safety measure that provides a level of safety equivalent to that obtained by the use of a lock. Examples of additional safety measures include the removal of an

isolating circuit element, blocking of a controlling switch, or opening of an extra disconnecting device.

(5) A lock may be placed without a tag only under the following conditions:

(a) Only one circuit or piece of equipment is deenergized; and

(b) The lockout period does not extend beyond the work shifts; and

(c) Employees exposed to the hazards associated with reenergizing the circuit or equipment are familiar with this procedure.

[WSR 97-09-013, recodified as § 296-307-37813, filed 4/7/97, effective 4/7/97. Statutory Authority: RCW 49.17.040, [49.17.]050 and [49.17.]060. WSR 96-22-048, § 296-306A-37813, filed 10/31/96, effective 12/1/96.]

WAC 296-307-37815 What work practices must be followed to verify deenergization? The requirements of this section must be met before any circuits or equipment can be considered and worked as deenergized.

(1) A qualified person must operate the equipment operating controls or otherwise verify that the equipment cannot be restarted.

(2) A qualified person must use test equipment to test the circuit elements and electrical parts of equipment to which employees will be exposed and shall verify that the circuit elements and equipment parts are deenergized. The test must also determine if any energized conditions exists as a result of inadvertently induced voltage or unrelated voltage backfeed even though specific parts of the circuit have been deenergized and presumed to be safe. If the circuit to be tested is over 600 volts, nominal, the test equipment must be checked for proper operation immediately before and immediately after this test.

[WSR 97-09-013, recodified as § 296-307-37815, filed 4/7/97, effective 4/7/97. Statutory Authority: RCW 49.17.040, [49.17.]050 and [49.17.]060. WSR 96-22-048, § 296-306A-37815, filed 10/31/96, effective 12/1/96.]

WAC 296-307-37817 What work practices must be followed when reenergizing equipment? These requirements must be met, in the order given, before circuits or equipment are reenergized, even temporarily.

(1) A qualified person must conduct tests and visual inspections as necessary to verify that all tools, electrical jumpers, shorts, grounds, and other devices have been removed, so that the circuits and equipment can be safely energized.

(2) Employees exposed to the hazards associated with reenergizing the circuit or equipment must be warned to stay clear of circuits and equipment.

(3) Each lock and tag must be removed by the employee who applied it or under his or her direct supervision. However, if this employee is absent from the workplace, then the lock or tag must be removed by a qualified person designated to perform this task if:

(a) The employer ensures that the employee who applied the lock or tag is not available at the workplace; and

(b) The employer ensures that the employee is aware that the lock or tag has been removed before resuming work at that workplace.

(4) There shall be a visual determination that all employees are clear of the circuits and equipment.

[WSR 97-09-013, recodified as § 296-307-37817, filed 4/7/97, effective 4/7/97. Statutory Authority: RCW 49.17.040, [49.17.]050 and [49.17.]060. WSR 96-22-048, § 296-306A-37817, filed 10/31/96, effective 12/1/96.]

WAC 296-307-37819 What safety-related work practices relate to portable electric equipment? This section applies to using cord-connected and plug-connected equipment, including flexible cord sets (extension cords).

(1) Portable equipment must be handled in a manner that will not cause damage. Flexible electric cords connected to equipment must not be used for raising or lowering the equipment. Flexible cords must not be fastened with staples or otherwise hung in a way that could damage the outer jacket or insulation.

(2) Visual inspection requirements:

(a) Portable cord-connected and plug-connected equipment and flexible cord sets must be visually inspected before use on any shift for external defects (such as loose parts, deformed and missing pins, or damage to outer jackets or insulation) and for evidence of possible internal damage (such as pinched or crushed outer jacket). Cord-connected and plug-connected equipment and flexible cord sets that remain connected once they are in place and are not exposed to damage need not be visually inspected until they are relocated.

(b) If there is a defect or evidence of damage that might expose an employee to injury, the defective or damaged items must be removed from service, and no employee shall use it until repairs and tests necessary to render the equipment safe have been made.

(c) When an attachment plug is to be connected to a receptacle (including any on a cord set), the relationship of the plug and receptacle contacts must first be checked to ensure they are of proper mating configurations.

(3) Requirements for grounding-type equipment:

(a) A flexible cord used with grounding-type equipment must contain an equipment grounding conductor.

(b) Attachment plugs and receptacles must not be connected or altered in a manner that would prevent proper continuity of the equipment grounding conductor at the point where plugs are attached to receptacles. These devices must not be altered to allow the grounding pole of a plug to be inserted into slots intended for connection to the current-carrying conductors.

(c) Adapters that interrupt the continuity of the equipment grounding connection are prohibited.

(4) Portable electric equipment and flexible cords used in highly conductive work locations, or in locations where employees are likely to contact water or conductive liquids, must be approved for those locations.

(5) Connecting attachment plugs.

(a) Employees' hands must not be wet when plugging and unplugging flexible cords and cord-connected and plug-connected equipment, if energized equipment is involved.

(b) Energized plug and receptacle connections must be handled only with insulating protective equipment if the condition of the connection could provide a conducting path to the employee's hand. For example: If a cord connector is wet from being immersed in water.

(c) Locking-type connectors must be properly secured after connection.

[WSR 97-09-013, recodified as § 296-307-37819, filed 4/7/97, effective 4/7/97. Statutory Authority: RCW 49.17.040, [49.17.]050 and [49.17.]060. WSR 96-22-048, § 296-306A-37819, filed 10/31/96, effective 12/1/96.]

WAC 296-307-37821 What safety-related work practices relate to electric power and lighting circuits? (1) Load rated switches, circuit breakers, or other devices specifically designed as disconnecting means must be used for the opening, reversing, or closing of circuits under load conditions. Any cable connectors other than the load-break type, fuses, terminal lugs, and cable splice connections are prohibited for such purposes, except in an emergency.

(2) After a circuit is deenergized by a circuit protective device, the circuit must not be manually reenergized until it has been determined that the equipment and circuit can be safety energized. This repetitive manual reclosing of circuit breakers or reenergizing circuits through replaced fuses is prohibited.

Note: When it can be determined from the design of the circuit and the overcurrent devices involved that the automatic operation of a device was caused by an overload rather than a fault connection, no examination of the circuit or connected equipment is needed before the circuit is reenergized.

(3) Overcurrent protection of circuits and conductors must not be modified, even on a temporary basis, beyond that allowed by this part for the installation safety requirements for overcurrent protection.

[WSR 97-09-013, recodified as § 296-307-37821, filed 4/7/97, effective 4/7/97. Statutory Authority: RCW 49.17.040, [49.17.]050 and [49.17.]060. WSR 96-22-048, § 296-306A-37821, filed 10/31/96, effective 12/1/96.]

WAC 296-307-37823 What safety-related work practices relate to test instruments and equipment? (1) Only qualified persons may perform testing work on electric circuits or equipment.

(2) Test instruments and equipment and all associated test leads, cables, power cords, probes, and connectors must be visually inspected for external defects and damage before the equipment is used. If there is a defect or evidence of damage that might expose an employee to injury, the defective or damaged item must be removed from service, and no employee may use it until necessary repairs and tests to render the equipment safe have been made.

(3) Test instruments and equipment and their accessories must be rated for the circuits and equipment to which they will be connected and must be designed for the environment in which they will be used.

[WSR 97-09-013, recodified as § 296-307-37823, filed 4/7/97, effective 4/7/97. Statutory Authority: RCW 49.17.040, [49.17.]050 and [49.17.]060. WSR 96-22-048, § 296-306A-37823, filed 10/31/96, effective 12/1/96.]

WAC 296-307-37825 What safety-related work practices relate to flammable materials? Where flammable materials are present only occasionally, electric equipment capable of igniting them must not be used, unless measures are taken to prevent hazardous conditions from developing.

Such materials include, but are not limited to: Flammable gases, vapors, or liquids; combustible dust; and ignitable fibers or flyings.

Note: Electrical installation requirements for locations where flammable materials are present on a regular basis are contained in WAC 296-307-372.

[Statutory Authority: RCW 49.17.040. WSR 98-24-096, § 296-307-37825, filed 12/1/98, effective 3/1/99. WSR 97-09-013, recodified as § 296-307-37825, filed 4/7/97, effective 4/7/97. Statutory Authority: RCW 49.17.040, [49.17.]050 and [49.17.]060. WSR 96-22-048, § 296-306A-37825, filed 10/31/96, effective 12/1/96.]

WAC 296-307-380 Electrical protective equipment.

[WSR 97-09-013, recodified as § 296-307-380, filed 4/7/97, effective 4/7/97. Statutory Authority: RCW 49.17.040, [49.17.]050 and [49.17.]060. WSR 96-22-048, § 296-306A-380, filed 10/31/96, effective 12/1/96.]

WAC 296-307-38003 How must protective equipment be used? (1) Employees working in the areas where there are potential electrical hazards must have and use electrical protective equipment that is appropriate for the specific parts of the body to be protected and for the work to be performed.

(2) If the insulating capability of protective equipment may be subject to damage during use, the insulating material must be protected.

For example: An outer covering of leather is sometimes used to protect rubber insulating material.

(3) Employees must wear nonconductive head protection wherever there is a danger of head injury from electric shock or burns due to contact with exposed energized parts.

(4) Employees must wear protective equipment for the eyes or face wherever there is danger of injury to the eyes or face from electrical arcs or flashes or from flying objects resulting from electrical explosion.

[WSR 97-09-013, recodified as § 296-307-38003, filed 4/7/97, effective 4/7/97. Statutory Authority: RCW 49.17.040, [49.17.]050 and [49.17.]060. WSR 96-22-048, § 296-306A-38003, filed 10/31/96, effective 12/1/96.]

WAC 296-307-38006 What requirements apply to general protective equipment and tools? (1) When working near exposed energized conductors or circuit parts, each employee must use insulated tools or handling equipment if the tools or handling equipment might make contact with such conductors or parts. If the insulating capability of insulated tools or handling equipment is subject to damage, the insulating material must be protected.

(2) Ropes and handlines used near exposed energized parts must be nonconductive.

(3) Protective shields, protective barriers, or insulating materials must be used to protect each employee from shock, burns, or other electrically related injuries while that employee is working near exposed energized parts that might be accidentally contacted or where dangerous electric heating or arcing might occur. When normally enclosed live parts are exposed for maintenance or repair, they must be guarded to protect unqualified persons from contact with the live parts.

(4) Altering techniques must be used to warn and protect employees from hazards that could cause injury due to electric shock, burns, or failure of electric equipment parts.

(5) Safety signs, safety symbols, or accident prevention tags must be used where necessary to warn employees about electrical hazards that may endanger them, as required by WAC 296-307-330.

[Statutory Authority: RCW 49.17.040. WSR 98-24-096, § 296-307-38006, filed 12/1/98, effective 3/1/99. WSR 97-09-013, recodified as § 296-307-38006, filed 4/7/97, effective 4/7/97. Statutory Authority: RCW 49.17.040,

[49.17.]050 and [49.17.]060. WSR 96-22-048, § 296-306A-38006, filed 10/31/96, effective 12/1/96.]

WAC 296-307-38009 What manufacturing and marking requirements apply to electrical protective devices? Insulating blankets, matting, covers, line hose, gloves, and sleeves made of rubber must meet the following manufacture and marking requirements:

(1) Blankets, gloves, and sleeves must be produced by a seamless process.

(2) Each item must be clearly marked as follows:

(a) All classified equipment must be marked with its class number.

(b) Nonozone-resistant equipment other than matting must be marked Type I.

(c) Ozone-resistant equipment other than matting must be marked Type II.

(d) Other relevant markings, such as the manufacturer's identification and the size of the equipment, may also be provided.

(3) Markings must be nonconducting and shall be applied so they do not impair the insulating qualities of the equipment.

(4) Markings on gloves must be on the cuff.

[WSR 97-09-013, recodified as § 296-307-38009, filed 4/7/97, effective 4/7/97. Statutory Authority: RCW 49.17.040, [49.17.]050 and [49.17.]060. WSR 96-22-048, § 296-306A-38009, filed 10/31/96, effective 12/1/96.]

WAC 296-307-38012 What electrical requirements apply to electrical protective devices? Insulating blankets, matting, covers, line hose, gloves, and sleeves made of rubber must meet the following electrical requirements:

(1) Equipment must be capable of withstanding the a-c proof-test voltage specified in Table 1 or the d-c proof-test voltage specified in Table 2.

(a) The proof-test must reliably indicate that the equipment can withstand the voltage involved.

(b) The test voltage must be applied continuously for three minutes for equipment other than matting and must be applied continuously for one minute for matting.

(c) Gloves must also be capable of withstanding the a-c proof-test voltage specified in Table 1 after a sixteen-hour water soak.

(2) When the a-c proof-test is used on gloves, the 60 hertz proof-test current must not exceed the values specified in Table 1 at any time during the test period.

(a) If the a-c proof-test is made at a frequency other than 60 hertz, the permissible proof-test current must be computed from the direct ratio of the frequencies.

(b) For the test, gloves (right side out) must be filled with tap water and immersed in water to a depth that is in accordance with Table 3. Water must be added to or removed from the glove, as necessary, so that the water level is the same inside and outside the glove.

(c) After the sixteen-hour water soak, the 60 hertz proof-test current may exceed the values given in Table 1 by not more than 2 milliamperes.

(3) Equipment that has been subjected to a minimum breakdown voltage test must not be used for electrical protection.

(4) Material used for Type II insulating equipment must be capable of withstanding an ozone test, with no visible effects. The ozone test must reliably indicate that the material will resist ozone exposure in actual use. Any visible signs of ozone deterioration of the material, such as checking, cracking, breaks, or pitting, is evidence of failure to meet the requirements for ozone-resistant material.

Note: Rubber insulating equipment meeting the following national consensus standards is considered to be in compliance with WAC 296-307-38009, 296-307-38012, and 296-307-38015:

- American Society for Testing and Materials (ASTM) D 120-87, Specification for Rubber Insulating Gloves.
- ASTM D 178-93, Specification for Rubber Insulating Matting.
- ASTM D 1048-93, Specification for Rubber Insulating Blankets.
- ASTM D 1049-93, Specification for Rubber Insulating Covers.
- ASTM D 1050-90, Specification for Rubber Insulating Line Hose.
- ASTM D 1051-87, Specification for Rubber Insulating Sleeves.

These standards contain specifications for conducting the tests required in this section.

[Statutory Authority: RCW 49.17.040. WSR 98-24-096, § 296-307-38012, filed 12/1/98, effective 3/1/99. WSR 97-09-013, recodified as § 296-307-38012, filed 4/7/97, effective 4/7/97. Statutory Authority: RCW 49.17.040, [49.17.]050 and [49.17.]060. WSR 96-22-048, § 296-306A-38012, filed 10/31/96, effective 12/1/96.]

WAC 296-307-38015 What workmanship and finish requirements apply to electrical protective devices? Insulating blankets, matting, covers, line hose, gloves, and sleeves made of rubber must meet the following workmanship and finish requirements:

(1) Equipment must be free of harmful physical irregularities that can be detected by the tests or inspections required in WAC 296-307-38012.

(2) Surface irregularities that may be present on all rubber goods because of imperfections on forms or molds or because of inherent difficulties in the manufacturing process and that may appear as indentations, protuberances, or imbedded foreign material are acceptable if:

(a) The indentation or protuberance blends into a smooth slope when the material is stretched.

(b) Foreign material remains in place when the insulating material is folded and stretches with the insulating material surrounding it.

[Statutory Authority: RCW 49.17.040. WSR 98-24-096, § 296-307-38015, filed 12/1/98, effective 3/1/99. WSR 97-09-013, recodified as § 296-307-38015, filed 4/7/97, effective 4/7/97. Statutory Authority: RCW 49.17.040, [49.17.]050 and [49.17.]060. WSR 96-22-048, § 296-306A-38015, filed 10/31/96, effective 12/1/96.]

WAC 296-307-38018 How must electrical protective devices be maintained and used? (1) Electrical protective equipment must be maintained in a safe, reliable condition.

(2) The following specific requirements apply to insulating blankets, covers, line hose, gloves, and sleeves made of rubber:

(a) Maximum use voltages must meet the requirements in Table 4.

(b) Insulating equipment must be inspected for damage before each day's use and immediately following any incident that can reasonably be suspected of having caused damage. Insulating gloves must be given an air test, along with the inspection.

(c) Insulating equipment with any of the following defects must not be used:

(i) A hole, tear, puncture, or cut;

(ii) Ozone cutting or ozone checking (the cutting action produced by ozone on rubber under mechanical stress into a series of interlacing cracks);

(iii) An embedded foreign object;

(iv) Any of the following texture changes: Swelling, softening, hardening, or becoming sticky or inelastic;

(v) Any other defect that damages the insulating properties.

(d) Insulating equipment found to have other defects that might affect its insulating properties must be removed from service and returned for testing under (h) of this subsection.

(e) Insulating equipment must be cleaned as needed to remove foreign substances.

(f) Insulating equipment must be stored in such a location and in such a manner as to protect it from light, temperature extremes, excessive humidity, ozone, and other injurious substances and conditions.

(g) Protector gloves must be worn over insulating gloves.

(h) Electrical protective equipment must be subjected to periodic electrical tests. Test voltages and the maximum intervals between tests must be according to Table 4 and Table 5.

(i) The test method used must reliably indicate whether the insulating equipment can withstand the voltages involved.

Note: Standard electrical test methods considered as meeting this requirement are given in the following national consensus standards:

- American Society for Testing and Materials (ASTM) D 120-87, Specification for Rubber Insulating Gloves.
- ASTM D 1048-93, Specification for Rubber Insulating Blankets.
- ASTM D 1049-93, Specification for Rubber Insulating Covers.
- ASTM D 1050-90, Specification for Rubber Insulating Line Hose.
- ASTM D 1051-87, Specification for Rubber Insulating Sleeves.
- ASTM F 478-92, Specification for In-Service Care of Insulating Line Hose and Covers.
- ASTM F 479-88a, Specification for In-Service Care of Insulating Blankets.
- ASTM F 496-93b, Specification for In-Service Care of Insulating Gloves and Sleeves.

(j) Insulating equipment that fails inspections or electrical tests must not be used by employees, except as follows:

(i) Rubber insulating line hose could be used in shorter lengths with the defective portion cut off.

(ii) Rubber insulating blankets could be repaired using a compatible patch that results in physical and electrical properties equal to those of the blanket.

(iii) Rubber insulating blankets could be salvaged by severing the defective area from the undamaged portion of the blanket. The resulting undamaged area must not be smaller than twenty-two inches by twenty-two inches (560 mm by 560 mm) for Class 1, 2, 3, and 4 blankets.

(k) Repaired insulating equipment must be retested before it may be used by employees.

(l) You must certify that equipment has been tested in accordance with the requirements of (h), (i), and (k) of this subsection. The certification must identify the equipment that passed the test and the date it was tested.

Note: This requirement may be met by marking the equipment and entering the results of the tests and the dates of testing onto logs.

Table 1
A-C Proof-Test Requirements
Maximum proof-test current, mA (gloves only)

Class of equipment	Proof-test voltage rms V	267 mm (10.5 in.) glove	356 mm (14 in.) glove	406 mm (16 in.) glove	457 mm (18 in.) glove
0	5,000	8	12	14	16
1	10,000		14	16	18
2	20,000		16	18	20
3	30,000		18	20	22
4	40,000			22	24

Table 2
D-C Proof-Test Requirements

Class of Equipment	Proof-test voltage
0	20,000
1	40,000
2	50,000

Table 2
D-C Proof-Test Requirements

Class of Equipment	Proof-test voltage
3	60,000
4	70,000

Note: The d-c voltages listed in this table are not appropriate for proof testing rubber insulating line hose or covers. For this equipment, d-c proof-tests shall use a voltage high enough to indicate that the equipment can be safely used at the voltages listed in Table 3. See ASTM D 1050-90 and ASTM D 1049-88 for further information on proof tests for rubber insulating line hose and covers.

Table 3
Glove Tests-Water Level[1, 2]

	A-C proof-test		D-C proof-test	
Class of glove	mm.	in.	mm.	in.
0	38	1.5	38	1.5
1	38	1.5	51	2.0
2	64	2.5	76	3.0
3	89	3.5	102	4.0
4	127	5.0	153	6.0

[1]The water level is given as the clearance from the cuff of the glove to the water line, with a tolerance of 13 mm. (0.5 in.).

[2]If atmospheric conditions make the specified clearances impractical, the clearances may be increased by a maximum of 25 mm. (1 in.)

Table 4
Rubber Insulating Equipment Voltage Requirements

Class of equipment	Maximum use voltage[1] a-c-rms	Retest voltage[2] a-c-rms	Retest voltage[2] d-c-rms
0	1,000	5,000	20,000
1	7,500	10,000	40,000
2	17,000	20,000	50,000
3	26,500	30,000	60,000
4	36,000	40,000	70,000

Note: Rubber gloves shall only be used on voltages of 5000 volts phase to phase or less.

[1]The maximum use voltage is the a-c voltage (rms) classification of the protective equipment that designates the maximum nominal design/voltage of the energized system that may be safely worked. The nominal voltage design is equal to the phase-to-phase voltage on multiphase circuits. However, the phase-to-ground potential is considered to be the nominal design/voltage:

(a) If there is no multiphase exposure in a system area and if the voltage exposure is limited to the phase-to-ground potential, or

(b) If the electrical equipment and devices are insulated or isolated or both so that the multiphase exposure on a grounded wye circuit is removed.

[2]The proof-test voltage shall be applied continuously for at least one minute, but no more than three minutes.

Table 5
Rubber Insulating Equipment Test Intervals

Type of equipment	When to test
Rubber insulating line hose	Upon indication that insulating value is suspect
Rubber insulating covers	Upon indication that insulating value is suspect
Rubber insulating blankets	Before first issue and every 12 months thereafter
Rubber insulating gloves	Before first issue and every 6 months thereafter
Rubber insulating sleeves	Before first issue and every 12 months thereafter

(3) Where switches or fuses of more than 150 volts to ground are not guarded during ordinary operations, suitable insulating floors, mats or platforms must be provided on which the operator must stand while handling the switches.

[WSR 97-09-013, recodified as § 296-307-38018, filed 4/7/97, effective 4/7/97. Statutory Authority: RCW 49.17.040, [49.17.]050 and [49.17.]060. WSR 96-22-048, § 296-306A-38018, filed 10/31/96, effective 12/1/96.]

SPECIALIZED OPERATIONS

Part U-1

Hazardous Materials—Anhydrous Ammonia

WAC 296-307-400 Anhydrous ammonia.

[WSR 97-09-013, recodified as § 296-307-400, filed 4/7/97, effective 4/7/97. Statutory Authority: RCW 49.17.040, [49.17.]050 and [49.17.]060. WSR 96-22-048, § 296-306A-400, filed 10/31/96, effective 12/1/96.]

WAC 296-307-40001 What does this section cover? WAC 296-307-400 covers the transportation and application of anhydrous ammonia.

[Statutory Authority: RCW 49.17.040. WSR 98-24-096, § 296-307-40001, filed 12/1/98, effective 3/1/99. WSR 97-09-013, recodified as § 296-307-40001, filed 4/7/97, effective 4/7/97. Statutory Authority: RCW 49.17.040, [49.17.]050 and [49.17.]060. WSR 96-22-048, § 296-306A-40001, filed 10/31/96, effective 12/1/96.]

WAC 296-307-40003 What definitions apply to this section? "Certified" means the equipment has been tested by a nationally recognized testing laboratory and meets nationally recognized standards or is safe for a specific use; or is a kind whose production is periodically inspected by a nationally recognized testing laboratory, and bears identification of certification.

"DOT" means the Federal Department of Transportation.

"DOT container" means a container constructed according to the requirements of 49 C.F.R. chapter 1.

"DOT cylinder" means a cylinder that meets the requirements of 49 C.F.R. chapter I.

"Labeled" means the equipment has an attached label, symbol, or other identifying mark of a nationally recognized testing laboratory that makes periodic inspections of the production of such equipment, and the label indicates compliance with nationally recognized standards or tests.

[WSR 97-09-013, recodified as § 296-307-40003, filed 4/7/97, effective 4/7/97. Statutory Authority: RCW 49.17.040, [49.17.]050 and [49.17.]060. WSR 96-22-048, § 296-306A-40003, filed 10/31/96, effective 12/1/96.]

WAC 296-307-40005 What general requirements apply to the storage and handling of anhydrous ammonia? (1) All employees must use at least gloves and goggles and may supplement with a face shield while working on or with charged anhydrous ammonia equipment.

(2) You must ensure that equipment is inspected before each day's work. Conditions that would contribute to leaks shall be corrected.

(3) Hose end-valves must be closed when not in use to prevent accidental discharge in case the main valve is opened.

(4) Relief and vapor valves must discharge away from the operator's working position.

[Statutory Authority: RCW 49.17.040. WSR 98-24-096, § 296-307-40005, filed 12/1/98, effective 3/1/99. WSR 97-09-013, recodified as § 296-307-40005, filed 4/7/97, effective 4/7/97. Statutory Authority: RCW 49.17.040, [49.17.]050 and [49.17.]060. WSR 96-22-048, § 296-306A-40005, filed 10/31/96, effective 12/1/96.]

WAC 296-307-40007 What requirements apply to systems mounted on farm wagons (implements of husbandry) for the transportation of ammonia? All anhydrous ammonia containers with a capacity of 3,000 gallons or less and equipment mounted on farm wagons (implements of husbandry) that is used to transport ammonia must meet the requirements of this section.

WAC 296-307-40011 through 296-307-40037 also apply unless otherwise noted.

(1) Containers must meet the following mounting requirements:

(a) The farm wagon or container has a stop so the container does not dislodge from its mounting when a farm wagon stops suddenly.

(b) The container is anchored to the farm wagon at one or more places on each side of the container.

(c) The weight of containers mounted on four-wheel farm wagons, is distributed evenly over both axles.

(d) When the cradle and the container are not welded together, material between them eliminates metal-to-metal friction.

(2) Container accessories must meet the following requirements:

(a) Each container has a fixed maximum liquid-level gauge.

(b) All containers with more than 250-gallon capacity have a pressure gauge with a dial graduated from 0-400 psi.

(c) The filling connection is fitted with one of the following:

(i) A combination back-pressure check valve and excess-flow valve; or

(ii) One double or two single back-pressure check valves; or

(iii) A positive shut-off valve that has either an internal back-pressure check valve or an internal excess flow valve.

(d) All containers with more than 250-gallon capacity are equipped for spray loading or with an approved vapor return valve.

(e) All vapor and liquid connections have approved excess flow valves or quick-closing internal valves that are only open for operating.

Exception: Safety-relief valves and connections that are specifically exempted by WAC 296-307-40019(5) are exempt from this requirement.

(f) Fittings are protected from physical damage by a rigid guard. The guard is designed to withstand force from any direction, equal to twice the weight of the container and lading, at a safety factor of four. If the guard is fully enclosed, the safety-relief valves are properly vented through the guard.

(g) If a liquid withdrawal line is installed in the bottom of a container, the connections and hose are at least as high as the lowest horizontal edge of the farm wagon axle.

(h) Both ends of the hose are secure while in transit.

(3) Each side and the rear end of the container must be marked in letters at least four inches high, with the words

"ANHYDROUS AMMONIA" or, "CAUTION—AMMONIA," or marked according to DOT regulations.

(4) Farm wagons (implements of husbandry) must meet all state regulations and the following requirements:

(a) All farm wagons must be securely attached to the vehicle drawing them by drawbars with safety chains.

(b) A farm wagon must be constructed so that it will follow the path of the towing vehicle and will prevent the towed wagon from whipping or swerving dangerously from side to side.

(c) All farm wagons must have five gallons or more of readily available clean water.

[Statutory Authority: RCW 49.17.040. WSR 98-24-096, § 296-307-40007, filed 12/1/98, effective 3/1/99. WSR 97-09-013, recodified as § 296-307-40007, filed 4/7/97, effective 4/7/97. Statutory Authority: RCW 49.17.040, [49.17.]050 and [49.17.]060. WSR 96-22-048, § 296-306A-40007, filed 10/31/96, effective 12/1/96.]

WAC 296-307-40009 What requirements apply to systems mounted on farm wagons (implements of husbandry) for the application of ammonia? This section applies to systems mounted on farm equipment that are used for the field application of ammonia.

WAC 296-307-40011 through 296-307-40037 also apply unless otherwise noted.

(1) All containers must be securely mounted.

(2) Container valves and accessories must meet the following requirements:

(a) Each container has a fixed maximum liquid-level gauge.

(b) The filling connection is fitted with one of the following:

(i) A combination back-pressure check valve and excess-flow valve; or

(ii) One double or two single back-pressure check valves; or

(iii) A positive shut-off valve that has either an internal back-pressure check valve or an internal excess flow valve.

(c) An excess-flow valve is not required in the vapor connection if the controlling orifice is a maximum of 7/16 inch in diameter and the valve is a hand-operated shut-off valve. To assist in filling applicator tanks, you may bleed vapors to the open air, if this requirement is met.

(d) Metering devices may be connected directly to the tank withdrawal valve. You may use a union type connection between the tank valve and metering device. You may use remote mounting of metering devices if the hose meets the requirements of Appendix B. When the applicator tank is trailed and the metering device is remotely mounted, such as on the tractor tool bar, you must use an automatic break-away type, self-closing coupling.

(e) No excess-flow valve is required in the liquid withdrawal line if the controlling orifice between the contents of the container and the outlet of the shut-off valve is a maximum of 7/16 inch in diameter.

[Statutory Authority: RCW 49.17.040. WSR 98-24-096, § 296-307-40009, filed 12/1/98, effective 3/1/99. WSR 97-09-013, recodified as § 296-307-40009, filed 4/7/97, effective 4/7/97. Statutory Authority: RCW 49.17.040, [49.17.]050 and [49.17.]060. WSR 96-22-048, § 296-306A-40009, filed 10/31/96, effective 12/1/96.]

WAC 296-307-40011 What requirements must approved anhydrous ammonia equipment meet? All equipment must be approved by one of the following methods:

(1) The equipment was installed before February 8, 1973, and was approved and tested, and installed according to either the requirements of the American National Standard for the Storage and Handling of Anhydrous Ammonia, K61.1, or the Fertilizer Institute Standards for the Storage and Handling of Agricultural Anhydrous Ammonia, M-1, in effect at the time of installation; or

(2) The equipment is accepted, or certified, or listed, or labeled, or otherwise determined to be safe by a nationally recognized testing laboratory; or

(3)(a) The equipment is a type that no nationally recognized testing laboratory accepts, certifies, lists, labels, or determines to be safe; and

(b) The equipment is inspected or tested by an authority responsible for enforcing occupational safety provisions of a law, code, or regulation pertaining to the storage, handling, transport, and use of anhydrous ammonia; and

(c) The equipment is found in compliance with either the requirements of the American National Standard for the Storage and Handling of Anhydrous Ammonia, K61.1, or the Fertilizer Institute Standards for the Storage and Handling of Agricultural Anhydrous Ammonia, M-1, in effect at the time of installation; or

(4) For a custom-designed and custom-built unit:

(a) You cannot find a nationally recognized testing laboratory or authority responsible for the enforcement of a law, code or regulation pertaining to the storage, transportation and use of anhydrous ammonia that is willing to accept, certify, list, label or determine to be safe your custom equipment; and

(b) You have on file a document attesting to its safe condition following appropriate tests. The document must be signed by a registered professional engineer or qualified person. The document must describe the test bases, test data and results, and also the qualifications of the certifying person.

[WSR 97-09-013, recodified as § 296-307-40011, filed 4/7/97, effective 4/7/97. Statutory Authority: RCW 49.17.040, [49.17.]050 and [49.17.]060. WSR 96-22-048, § 296-306A-40011, filed 10/31/96, effective 12/1/96.]

WAC 296-307-40013 What requirements apply to the construction, original test, and requalification of non-refrigerated containers? The code is the Unfired Pressure Vessel Code of the American Society of Mechanical Engineers (Section VIII of the ASME Boiler Construction Code), 1952, 1956, 1959, 1962, 1965, 1968 and 1971 editions, the joint code of the American Petroleum Institute and the American Society of Mechanical Engineers (API-ASME Code) 1951 edition, and amendments or later editions, as adopted.

(1) Containers used with systems covered in WAC 296-307-40005 and 296-307-40007 must be constructed and tested according to the code.

Exception: Construction under Table UW-12 at a basic joint efficiency of under 80% is prohibited. Containers built according to code are exempt from paragraphs UG-125 to UG-128, inclusive, and paragraphs UG-132 and UG-133 of the code.

Note: This subsection allows the continued use or reinstallation of containers constructed and maintained according to the 1949, 1950, 1952, 1956, 1959, 1962, 1965 and 1968 editions of the Unfired Pressure Vessel Code of the ASME or any revisions thereof in effect at the time of fabrication.

(2) Containers more than 36 inches in diameter or 250 gallons water capacity must be constructed to meet one or more of the following requirements:

(a) Containers must be stress relieved after fabrication according to the code; or

(b) Cold-formed heads, when used, must be stress relieved; or

(c) Hot-formed heads must be used.

(3) Welding to the shell, head, or any other part of the container subject to internal pressure must be according to the code. Other welding is permitted only on saddle plates, lugs, or brackets attached to the container by the container manufacturer.

Containers used with systems covered in subsection (4) of this section must be constructed and tested in accordance with the DOT specifications.

(4) Containers must comply with department of transportation specifications and must be maintained, filed, packaged, marked, labeled and shipped to comply with current DOT regulations and American National Standard Method of Marking Portable Compressed Gas Containers to Identify the Material Contained, Z48.1-1954 R1970. See Appendix C for availability.

[Statutory Authority: RCW 49.17.010, 49.17.040, 49.17.050, and 49.17.060. WSR 03-10-068, § 296-307-40013, filed 5/6/03, effective 8/1/03. Statutory Authority: RCW 49.17.040. WSR 98-24-096, § 296-307-40013, filed 12/1/98, effective 3/1/99. WSR 97-09-013, recodified as § 296-307-40013, filed 4/7/97, effective 4/7/97. Statutory Authority: RCW 49.17.040, [49.17.]050 and [49.17.]060. WSR 96-22-048, § 296-306A-40013, filed 10/31/96, effective 12/1/96.]

WAC 296-307-40015 How must nonrefrigerated containers and systems (other than DOT containers) be marked? (1) System nameplates, when required, must be permanently attached to the system so they are readily accessible for inspection.

(2) Each container or system covered in WAC 296-307-40005 and 296-307-40007 must be marked as follows:

(a) With indication that the container or system meets the requirements of the code under which the container is constructed.

(b) With indication on the container and system nameplate when the system is designed for underground installation.

(c) With the name and address of the supplier of the container or the trade name of the container and with the date of fabrication.

(d) With the water capacity of the container in pounds at 60°F or gallons, United States standard.

(e) With the design pressure in pounds per square inch gauge.

(f) With the wall thickness of the shell and heads.

(g) With indication of the maximum fill level for liquid anhydrous ammonia between 20°F and 100°F. Markings must be in increments of not more than 20°F.

Exception: Containers with fixed maximum level indicators, such as fixed length dip tubes, or containers that are filled by weight are exempt from this requirement.

(h) With the outside surface area in square feet.

(i) With minimum temperature in Fahrenheit for which the container is designed.

(j) The marking must be on the container itself or on a permanently attached nameplate.

(3) All main operating valves on permanently installed containers with a capacity of over 3,000 water gallons must be identified to show whether the valve is in liquid or vapor service. The valve must be identified as follows:

(a) The word LIQUID (or LIQUID VALVE), VAPOR (or VAPOR VALVE), as appropriate, must be placed on or within twelve inches of the valve by means of a stencil tag or decal.

(b) Liquid valves must be painted orange and vapor valves must be painted yellow. The legend ORANGE-LIQUID, YELLOW-VAPOR must be displayed in one or more conspicuous places at each permanent storage location. The legend must have letters at least two inches high and must be placed against a contrasting background.

(4) "Marking refrigerated containers." Each refrigerated container must be marked with a name plate on the outer covering in an accessible place as specified in the following:

- With the notation, "Anhydrous Ammonia"
- With the name and address of the builder and the date of fabrication
- With the water capacity of the container in gallons, U.S. Standard
- With the design pressure
- With the minimum temperature in degrees Fahrenheit for which the container was designed
- The maximum allowable water level to which the container may be filled for test purposes
- With the density of the product in pounds per cubic foot for which the container was designed
- With the maximum level to which the container may be filled with liquid anhydrous ammonia.

[Statutory Authority: RCW 49.17.010, 49.17.040, 49.17.050, and 49.17.060. WSR 03-10-068, § 296-307-40015, filed 5/6/03, effective 8/1/03. Statutory Authority: RCW 49.17.040. WSR 98-24-096, § 296-307-40015, filed 12/1/98, effective 3/1/99. WSR 97-09-013, recodified as § 296-307-40015, filed 4/7/97, effective 4/7/97. Statutory Authority: RCW 49.17.040, [49.17.]050 and [49.17.]060. WSR 96-22-048, § 296-306A-40015, filed 10/31/96, effective 12/1/96.]

WAC 296-307-40017 Where may anhydrous ammonia containers be located? (1) When selecting the location for a storage container, you must take into account the physiological effects of ammonia and adjacent fire hazards. Containers located indoors must be in areas especially approved for container storage.

(2) Containers must be located at least fifty feet from a dug well or other sources of potable water supply, unless the container is a part of a water treatment installation.

(3) Permanent storage containers must be located outside densely populated areas.

(4) Containers must be located according to the following:

Minimum distances (feet) from container to:

Nominal capacity of container	Line of adjoining property that may be built upon, highways & main line of railroad	Place of public assembly	Institution occupancy
Over 500 to 2,000	25	150	250
Over 2,000 to 30,000	50	300	500
Over 30,000 to 100,000	50	450	750
Over 100,000	50	600	1,000

(5) Storage areas must be kept free of readily ignitable materials such as waste, weeds and long dry grass.

[WSR 97-09-013, recodified as § 296-307-40017, filed 4/7/97, effective 4/7/97. Statutory Authority: RCW 49.17.040, [49.17.]050 and [49.17.]060. WSR 96-22-048, § 296-306A-40017, filed 10/31/96, effective 12/1/96.]

WAC 296-307-40019 What requirements apply to container accessories? (1) All accessories must be designed for at least the maximum working pressure of the part of the system on which they are installed. All accessories must be fabricated from materials suitable for anhydrous ammonia service.

(2) All connections to containers must have shut-off valves located as close to the container as practical.

Exception: Safety-relief devices, gauging devices, or those fitted with a No. 54 drill size orifice are exempt from this requirement.

(3) All required excess flow valves must close automatically at the rated flows of vapor or liquid specified by the manufacturer. The connections, lines, valves, and fittings must have a greater capacity than the rated flow of the excess flow valve.

(4) Liquid-level gauging devices that require bleeding to the atmosphere and that are constructed so that outward flow is a maximum of that passed by a No. 54 drill size opening may be installed without excess flow valves.

(5) Openings from the container or through fittings attached directly on container to which pressure gauge connections are made may be installed without excess flow valves if the openings are a maximum of No. 54 drill size.

(6) Required excess flow and back pressure check valves must be located inside the container or outside as close as practical to where the line enters the container. When located outside, the installation must be made to prevent any stress beyond the excess flow or back pressure check valve from causing a break between the container and the valve.

(7) Excess flow valves must be designed with a bypass that is a maximum of No. 60 drill size opening to allow equalization of pressures.

(8) Shut-off valves provided with an excess flow valve must be designed for proper installation in a container connection so that the excess flow valve will close if the shut-off valve breaks.

(9) All excess flow valves must be plainly and permanently marked with the name or trademark of the manufacturer, the catalog number, and the rated capacity.

[WSR 97-09-013, recodified as § 296-307-40019, filed 4/7/97, effective 4/7/97. Statutory Authority: RCW 49.17.040, [49.17.]050 and [49.17.]060. WSR 96-22-048, § 296-306A-40019, filed 10/31/96, effective 12/1/96.]

WAC 296-307-40021 What requirements apply to piping, tubing, and fittings? (1) All piping, tubing and fittings must be made of material suitable for anhydrous ammonia service.

(2) All piping, tubing and fittings must be designed for a pressure of at least the maximum pressure to which they may be subjected in service.

(3) All piping must be well supported and allow for expansion and contraction. All refrigeration system piping must conform to the Refrigeration Piping Code (ANSI B31.5 1966 addenda B31.1a-1968), a section of the American Standard Code for Pressure Piping, as it applies to ammonia.

(4) Piping used on nonrefrigerated systems must meet the requirements of ASTM A-53-1969 Grade B Electric Resistance Welded and Electric Flash Welded Pipe. Pipe must be at least Schedule 40 when joints are welded, or welded and flanged. Pipe must be at least Schedule 80 when joints are threaded. Brass, copper, or galvanized steel pipe or tubing is prohibited.

(5) All metal flexible connections for permanent installations must have a minimum working pressure of 250 psig (safety factor of 4). For temporary installations, you may use hose that meets the requirements of WAC 296-307-40023.

(6) Cast iron fittings are prohibited. You must use fittings made especially for ammonia service of malleable or nodular iron that meet the requirements of Specification ASTM A47 or ASTM A395.

(7) All piping, tubing, and fittings must allow for expansion, contraction, jarring, vibration, and settling.

(8) You must make adequate provision to protect all exposed piping from physical damage from moving machinery, the presence of automobiles or trucks, or other strain on the piping.

(9) Joint compounds must be resistant to ammonia.

(10) After assembly, all piping and tubing must be tested and proved to be free from leaks at pressure that is at least equal to the normal operating pressure of the system.

[Statutory Authority: RCW 49.17.040. WSR 98-24-096, § 296-307-40021, filed 12/1/98, effective 3/1/99. WSR 97-09-013, recodified as § 296-307-40021, filed 4/7/97, effective 4/7/97. Statutory Authority: RCW 49.17.040, [49.17.]050 and [49.17.]060. WSR 96-22-048, § 296-306A-40021, filed 10/31/96, effective 12/1/96.]

WAC 296-307-40023 What specifications must hoses meet? (1) Hose used in ammonia service and subject to container pressure must meet the requirements of the joint Rubber Manufacturers Association and the Fertilizer Institute "Hose Specifications for Anhydrous Ammonia."

(2) Hose subject to container pressure must be designed for a minimum working pressure of 350 psig and a minimum burst pressure of 1750 psig. Hose assemblies must be able to withstand a test pressure of 500 psig.

(3) Hose and hose connections on the low pressure side of flow control or pressure reducing valves on devices dis-

charging to atmospheric pressure must be designed for the maximum low side working pressure. All connections must be designed, constructed, and installed to prevent leaks when connected.

(4) Where liquid transfer hose is not drained after transfer operations, the hose must have an approved shut-off valve at the discharge end. You must provide a method to prevent excessive hydrostatic pressure in the hose. (See WAC 296-307-40025.)

(5) On all hose 1/2-inch outside diameter and larger, used for the transfer of anhydrous ammonia liquid or vapor, you must ensure that the following information is etched, cast, or impressed at five-foot intervals:

- Anhydrous Ammonia
- xxx psig (Maximum working pressure)
- Manufacturer's Name or Trademark
- Year of Manufacture

[Statutory Authority: RCW 49.17.040. WSR 98-24-096, § 296-307-40023, filed 12/1/98, effective 3/1/99. WSR 97-09-013, recodified as § 296-307-40023, filed 4/7/97, effective 4/7/97. Statutory Authority: RCW 49.17.040, [49.17.]050 and [49.17.]060. WSR 96-22-048, § 296-306A-40023, filed 10/31/96, effective 12/1/96.]

WAC 296-307-40025 What requirements apply to safety-relief devices? (1) Every container used in systems covered by WAC 296-307-400 must have one or more spring-loaded safety-relief valves or the equivalent.

(2) The discharge from safety-relief valves must be vented away from the container, upward, and unobstructed to the atmosphere. All safety-relief valve discharge openings must have suitable raincaps that allow free discharge of the vapor and prevent water from entering. You must provide a method to drain condensate. The rate of discharge must be as follows:

Surface Area sq. ft.	Flow Rate CFM Air	Surface Area sq. ft.	Flow Rate CFM Air	Surface Area sq. ft.	Flow Rate CFM Air
20	258	185	1,600	900	5,850
25	310	190	1,640	950	6,120
30	360	195	1,670	1,000	6,380
35	408	200	1,710	1,050	6,640
40	455	210	1,780	1,100	6,900
45	501	220	1,850	1,150	7,160
50	547	230	1,920	1,200	7,410
55	591	240	1,980	1,250	7,660
60	635	250	2,050	1,300	7,910
65	678	260	2,120	1,350	8,160
70	720	270	2,180	1,400	8,410
75	762	280	2,250	1,450	8,650
80	804	290	2,320	1,500	8,900
85	845	300	2,380	1,550	9,140
90	885	310	2,450	1,600	9,380
95	925	320	2,510	1,650	9,620
100	965	330	2,570	1,700	9,860
105	1,010	340	2,640	1,750	10,090
110	1,050	350	2,700	1,800	10,330
115	1,090	360	2,760	1,850	10,560
120	1,120	370	2,830	1,900	10,800
125	1,160	380	2,890	1,950	11,030
130	1,200	390	2,950	2,000	11,260
135	1,240	400	3,010	2,050	11,490
140	1,280	450	3,320	2,100	11,720
145	1,310	500	3,620	2,150	11,950
150	1,350	550	3,910	2,200	12,180
155	1,390	600	4,200	2,250	12,400
160	1,420	650	4,480	2,300	12,630
165	1,460	700	4,760	2,350	12,850
170	1,500	750	5,040	2,400	13,080
175	1,530	800	5,300	2,450	13,300
180	1,570	850	5,590	2,500	13,520

Surface area = total outside surface area of container in square feet. When the surface area is not stamped on the name plate or when the marking is not legible, calculate the area with one of the following formulas:

- Hemispherical heads: Area = (Length in feet) X (outside diameter in feet) X 3.1416.
- Other than hemispherical heads: Area = (Length in feet) + (0.3 outside diameter in feet) X (outside diameter in feet) X 3.1416.
- Spherical container: Area = (outside diameter in feet)^2 X 3.1416.
- Flow rate: CFM air = cubic feet per minute of air required at standard conditions, 60F and atmospheric pressure (14.7 psia).

For containers with total outside surface area greater than 2,500 sq. ft., the formula is: Flow rate CFM air = 22.11 A0.82 where A = outside surface area of the container in square feet.

(3) Container safety-relief valves must be set for start to discharge as follows, according to the design pressure of the container.

Containers	Minimum	Maximum*
ASME U-68, U-69	110%	125%
ASME U-200, U-201	95%	100%
ASME 1952, 1956, 1959, 1962, 1965, 1968 or 1971	95%	100%
API-ASME	95%	100%
U.S. Coast Guard	As required by USCG regulations	
DOT	As required by DOT regulations	

*Note: Plus a relief valve manufacturer's tolerance of ten percent.

(4) Safety-relief devices used in systems covered by WAC 296-307-400 must be constructed to discharge at a rate equal to or greater than the rates required in subsection (2) of this section before the pressure exceeds 120% (not including

the tolerance referred to in subsection (3) of this section) of the maximum permitted start-to-discharge pressure setting of the device.

(5) Safety-relief valves must be arranged to minimize tampering. If the pressure setting adjustment is external, the relief valves must have a sealable adjustment.

(6) Shut-off valves installed between the safety-relief valves and the containers or systems described in WAC 296-307-400 are prohibited.

Exception: A shut-off valve may be used where the arrangement of the valve allows the required capacity flow through the relief valves.

Exception example 1: A three-way valve installed under two safety-relief valves, each of which has the required rate of discharge and is installed to allow either of the safety-relief valves to be closed off, but does not allow both safety valves to be closed off at the same time.

Exception example 2: Two separate relief valves are installed with individual shut-off valves. The two shut-off valve stems must be mechanically interconnected to allow the full required flow of one safety-relief valve at all times.

Exception example 3: A safety-relief valve manifold that allows one valve of two, three, four or more to be closed off and the remaining valve or valves will provide not less than the rate of discharge shown on the manifold nameplate.

(7) Safety-relief valves must have direct communication with the vapor space of the container.

(8) Each safety-relief valve used with systems described in WAC 296-307-400 must be plainly and permanently marked as follows:

(a) With the letters "AA" or the symbol NH3.

(b) The pressure in pounds per square inch gauge (psig) at which the valve is set to start to discharge.

(c) The rate of discharge of the valve in cubic feet per minute of air at 60°F and atmospheric pressure (14.7 psia).

(d) The manufacturers name and catalog number.

For example: A safety-relief valve marked AA-250-4200 (air) mean the valve is suitable for use on an anhydrous ammonia container; that it is set to start to discharge at 250 psig; and that its rate of discharge is 4,200 cubic feet per minute of air.

(9) No connection to the safety-relief valve may restrict the flow capacity on either the upstream or downstream side.

(10) The manufacturer or supplier of a safety-relief valve manifold must publish complete data showing the flow rating through the combined assembly of the manifold with safety-relief valves installed. The manifold flow rating must be determined by testing the manifold with all but one valve discharging. The flow rate must be determined by the restricted opening or openings or those having the lowest flow. The valve must be marked as required in subsection (7) of this section.

(11) A hydrostatic relief valve must be installed between each pair of valves in the liquid ammonia piping or hose where liquid may be trapped to release into the atmosphere at a safe location.

(12) Discharge from safety-relief devices must not terminate in or beneath any building.

[Statutory Authority: RCW 49.17.040. WSR 98-24-096, § 296-307-40025, filed 12/1/98, effective 3/1/99. WSR 97-09-013, recodified as § 296-307-40025; filed 4/7/97, effective 4/7/97. Statutory Authority: RCW 49.17.040, [49.17.]050 and [49.17.]060. WSR 96-22-048, § 296-306A-40025, filed 10/31/96, effective 12/1/96.]

WAC 296-307-40027 What emergency precautions are required when handling anhydrous ammonia? (1) You must train employees required to handle ammonia in the safe operating practices and the proper action to take in an emergency. Employees must be instructed to use the equipment listed in subsection (3) of this section in an emergency.

(2) If ammonia system leaks, the employees trained for and designated to act in emergencies must:

(a) See that anyone not required to deal with an emergency is evacuated from the contaminated area.

(b) Have two suitable gas masks in readily accessible locations. Full face masks with ammonia canisters as certified by NIOSH under 42 C.F.R. Part 84, are suitable for emergency action for most leaks, particularly those that occur outdoors. For protection in concentrated ammonia atmospheres, self-contained breathing apparatus is required.

(c) Wear gauntlet type plastic or rubber gloves and wear plastic or rubber suits in heavily contaminated atmospheres.

(d) Shut off the appropriate valves.

(3) All storage systems must have on hand at least the following equipment for emergency and rescue purposes:

(a) *One full face gas mask with anhydrous ammonia refill canisters.

(b) **One pair of protective gloves.

(c) **One pair of protective boots.

(d) **One protective slicker and/or protective pants and jacket.

(e) Easily accessible shower and/or at least 50 gallons of clean water in an open top container.

(f) Tight-fitting vented goggles or one full face shield.

*If ammonia vapors are detected when the mask is applied, leave the area immediately. The life of a canister in service is controlled by the percentage of vapors to which it is exposed. Canisters must not be opened until ready for use and should be discarded after use or as recommended by the canister manufacturer. Unopened canisters may be guaranteed for as long as three years and all should be dated when received. In addition, an independently supplied air mask of the type used by fire departments may be used for emergencies.

**Gloves, boots, slickers, jackets, and pants must be made of rubber or other material impervious to ammonia.

(4) Where several persons are usually present, additional safety equipment may be necessary.

(5) Each tank motor vehicle transporting anhydrous ammonia, except farm applicator vehicles, must carry a container of at least five gallons of water and must have a full face gas mask, a pair of tight-fitting goggles or one full face shield. The driver must be instructed in their use and the proper action to take to provide for the driver's safety.

(6) If a leak occurs in transportation equipment and it is impractical to stop the leak, the driver should move the vehicle to an isolated location.

(7) If liquid ammonia contacts the skin or eyes, the affected area should be promptly and thoroughly flushed with water. Do not use neutralizing solutions or ointments on affected areas. A physician must treat all cases of eye exposure to liquid ammonia.

[Statutory Authority: RCW 49.17.010, 49.17.040, 49.17.050, and 49.17.060. WSR 03-10-068, § 296-307-40027, filed 5/6/03, effective 8/1/03; WSR 97-09-013, recodified as § 296-307-40027, filed 4/7/97, effective 4/7/97. Statutory Authority: RCW 49.17.040, [49.17.]050 and [49.17.]060. WSR 96-22-048, § 296-306A-40027, filed 10/31/96, effective 12/1/96.]

WAC 296-307-40029 What requirements apply to filling densities? Filling density means the percent ratio of the weight of the gas in a container to the weight of water at 60°F that the container will hold. One pound of water equals 27.737 cubic inches at 60°F. To determine the weight capacity of the tank in pounds, the weight of a gallon (231 cubic inches) of water at 60°F in air must be 8.32828 pounds.

(1) The filling densities for nonrefrigerated containers must not exceed the following:

	Aboveground	Underground
(i) Uninsulated	56%	58%
(ii) Insulated	57%	

(iii) DOT containers shall be filled according to DOT regulations.

This corresponds to 82% by volume at -28°F, 85% by volume at 5°F, 87.5% by volume at 30°F, and 90.6% by volume at 60°F.

(2) When containers are filled according to liquid level by any gauging method other than a fixed length dip tube gauge, each container should have a thermometer well so that the internal liquid temperature can be easily determined and the amount of liquid and vapor in the container corrected to a 60°F basis.

[WSR 97-09-013, recodified as § 296-307-40029, filed 4/7/97, effective 4/7/97. Statutory Authority: RCW 49.17.040, [49.17.]050 and [49.17.]060. WSR 96-22-048, § 296-306A-40029, filed 10/31/96, effective 12/1/96.]

WAC 296-307-40031 What requirements apply to the transfer of liquids? (1) Anhydrous ammonia must always be at a temperature suitable for the material of construction and design of the receiving containers. Ordinary steels are not suitable for refrigerated ammonia. See Appendix R of API Standard 620 "Recommended Rules for Design and Construction of Large Welded Low-Pressure Storage Tanks" for materials for low temperature service.

(2) At least one attendant must supervise the transfer of liquids from the time the connections are first made until they are finally disconnected.

(3) Flammable gases or gases that will react with ammonia (such as air) must not be used to unload tank cars or transport trucks.

(4) Containers must be charged or used only on authorization of the owner.

(5) Containers must be gauged and charged only in the open atmosphere or in buildings approved for that purpose.

(6) Pumps used for transferring ammonia must be recommended and labeled for ammonia service by the manufacturer.

(a) Pumps must be designed for at least 250 psig working pressure.

(b) Positive displacement pumps must have installed, off the discharge port, a constant differential relief valve discharging into the suction port of the pump through a line large enough to carry the full capacity of the pump at relief valve setting. The setting and installation must be according to the pump manufacturer's recommendations.

(c) On the discharge side of the pump, before the relief valve line, there must be a pressure gauge graduated from 0 to 400 psig installed.

(d) Plant piping must contain shut-off valves located as close as practical to pump connections.

(7) Compressors used for transferring or refrigerating ammonia must be recommended and labeled for ammonia service by the manufacturer.

(a) Compressors, except those used for refrigeration, must be designed for at least 250 psig working pressure. Crank cases of compressors not designed to withstand system pressure must be protected with a suitable safety-relief valve.

(b) Plant piping must have shut-off valves located as close as practical to compressor connections.

(c) A safety-relief valve large enough to discharge the full capacity of the compressor must be connected to the discharge before any shut-off valve.

(d) Compressors must have pressure gauges at suction and discharge graduated to at least one and one-half times the maximum pressure that can develop.

(e) Adequate means, such as drainable liquid trap, must be provided on the compressor suction to minimize the entry of liquid into the compressor.

(f) Where necessary to prevent contamination, an oil separator must be provided on the discharge side of the compressor.

(8) Loading and unloading systems must be protected by suitable devices to prevent emptying of the storage container or the container being loaded or unloaded if the hose is cut. Backflow check valves or properly sized excess flow valves must be installed where necessary to provide this protection. In the event that valves are not practical, remotely operated shut-off valves may be installed.

(9) Meters used to measure liquid anhydrous ammonia must be recommended and labeled for ammonia service by the manufacturer.

(a) Liquid meters must be designed for a minimum working pressure of 250 psig.

(b) The metering system must incorporate devices that will prevent the inadvertent measurement of vapor.

[WSR 97-09-013, recodified as § 296-307-40031, filed 4/7/97, effective 4/7/97. Statutory Authority: RCW 49.17.040, [49.17.]050 and [49.17.]060. WSR 96-22-048, § 296-306A-40031, filed 10/31/96, effective 12/1/96.]

WAC 296-307-40033 What requirements apply to tank car unloading points and operations? (1) Provisions for unloading tank cars must meet DOT requirements.

(2) Unloading operations must be performed by reliable employees who are properly instructed and responsible for careful compliance with all procedures.

(3) Caution signs must be placed on the track or car to give necessary warning to anyone approaching car from the open end of the siding. The signs must be left up until after car is unloaded and disconnected from discharge connections. Signs must be of metal or other suitable material, at least 12 by 15 inches, and bear the words "STOP—Tank car connected" or "STOP—Men at work." The word "STOP" must

be in letters at least four inches high and the other words in letters at least two inches high. The letters must be white on a blue background.

(4) The track of a tank car siding must be substantially level.

(5) Brakes must be set and wheels blocked on all cars being unloaded.

(6) Tank cars of anhydrous ammonia must be unloaded only at approved locations meeting the requirements of WAC 296-307-40025(4) and 296-307-40031(8).

[Statutory Authority: RCW 49.17.040. WSR 98-24-096, § 296-307-40033, filed 12/1/98, effective 3/1/99. WSR 97-09-013, recodified as § 296-307-40033, filed 4/7/97, effective 4/7/97. Statutory Authority: RCW 49.17.040, [49.17.]050 and [49.17.]060. WSR 96-22-048, § 296-306A-40033, filed 10/31/96, effective 12/1/96.]

WAC 296-307-40035 What requirements apply to the liquid-level gauging device? (1) Each container except those filled by weight must have an approved liquid-level gauging device.

(2) All gauging devices must be arranged so that the maximum liquid level to which the container is filled is easily determined.

(3) Gauging devices that require bleeding of the product to the atmosphere such as the rotary tube, fixed tube, and slip tube devices, must be designed so that the maximum opening of the bleed valve is a maximum of No. 54 drill size unless provided with an excess flow valve.

(4) Gauging devices must have a design pressure equal to or greater than the design pressure of the container on which they are installed.

(5) Fixed liquid-level gauges must be designed so that the maximum volume of the container filled by liquid is a maximum of 85% of its water capacity. The coupling into which the fixed liquid-level gauge is threaded must be placed at the 85% level of the container. If located elsewhere, the dip tube of this gauge must be installed so that it cannot be readily removed.

Note: This does not apply to refrigerated storage.

(6) Columnar gauge glasses must be restricted to stationary storage installation. They must have shut-off valves having metallic hand wheels, excess flow valves, and extra heavy glass adequately protected by a metal housing applied by the gauge manufacturer. They must be shielded against the direct rays of the sun.

[WSR 97-09-013, recodified as § 296-307-40035, filed 4/7/97, effective 4/7/97. Statutory Authority: RCW 49.17.040, [49.17.]050 and [49.17.]060. WSR 96-22-048, § 296-306A-40035, filed 10/31/96, effective 12/1/96.]

WAC 296-307-40037 How should aboveground uninsulated containers be maintained? Aboveground uninsulated containers should have a reflective surface maintained in good condition. We recommend white for painted surfaces, but other light reflecting colors are acceptable.

[WSR 97-09-013, recodified as § 296-307-40037, filed 4/7/97, effective 4/7/97. Statutory Authority: RCW 49.17.040, [49.17.]050 and [49.17.]060. WSR 96-22-048, § 296-306A-40037, filed 10/31/96, effective 12/1/96.]

WAC 296-307-40039 What requirements apply to electrical equipment and wiring? (1) Electrical equipment and wiring for use in ammonia installations must be general purpose or weather resistant as appropriate.

(2) Where concentrations of ammonia in the air in excess of 16% by volume are likely to be encountered, electrical equipment and wiring must be specified by and installed according to chapter 296-307 WAC Part T, for Class I, Group D locations.

[Statutory Authority: RCW 49.17.040. WSR 98-24-096, § 296-307-40039, filed 12/1/98, effective 3/1/99. WSR 97-09-013, recodified as § 296-307-40039, filed 4/7/97, effective 4/7/97. Statutory Authority: RCW 49.17.040, [49.17.]050 and [49.17.]060. WSR 96-22-048, § 296-306A-40039, filed 10/31/96, effective 12/1/96.]

Part U-2

Hazardous Materials—Liquified Petroleum Gas

WAC 296-307-410 Storage and handling of liquefied petroleum gases.

[WSR 97-09-013, recodified as § 296-307-410, filed 4/7/97, effective 4/7/97. Statutory Authority: RCW 49.17.040, [49.17.]050 and [49.17.]060. WSR 96-22-048, § 296-306A-410, filed 10/31/96, effective 12/1/96.]

WAC 296-307-41001 What does this part cover? Chapter 296-307 WAC Part U2 covers the storage and handling of liquefied petroleum gases.

The requirements of WAC 296-307-410 apply to all LP-gas installations covered by this part.

For additional requirements related to:	See WAC:
Cylinder systems	296-307-415
Systems using non-DOT containers	296-307-420
LP-gas as a motor fuel	296-307-425
Storage of containers awaiting use or resale	296-307-430
LP-gas installations on commercial vehicles	296-307-435
LP-gas service stations	296-307-440

[Statutory Authority: RCW 49.17.040. WSR 98-24-096, § 296-307-41001, filed 12/1/98, effective 3/1/99. WSR 97-09-013, recodified as § 296-307-41001, filed 4/7/97, effective 4/7/97. Statutory Authority: RCW 49.17.040, [49.17.]050 and [49.17.]060. WSR 96-22-048, § 296-306A-41001, filed 10/31/96, effective 12/1/96.]

WAC 296-307-41003 Which LP-gas installations are not covered by this part? (1) This part does not apply to:

(a) LP-gas refrigerated storage systems;

(b) LP-gas used with oxygen;

(c) LP-gas used in utility gas plants (covered by the National Fire Protection Association Standard for the Storage and Handling of Liquefied Petroleum Gases at Utility Gas Plants, NFPA No. 59-1968);

(d) Low-pressure (less than 1/2 pound per square inch or 14 inches water column) LP-gas piping systems, and the installation and operation of residential and commercial appliances supplied through such systems. The National Fire Protection Association Standard for the Installation of Gas Appliances and Gas Piping, NFPA 54-1969 apply to these systems.

(2) LP-gas installations, equipment, and appliances that met the requirements of the National Fire Protection Association Standard for the Storage and Handling of Liquefied Petroleum Gases NFPA No. 58-1972, 1973 at the time of

manufacture or installation may be used if they do not create a hazard to employees.

[WSR 97-09-013, recodified as § 296-307-41003, filed 4/7/97, effective 4/7/97. Statutory Authority: RCW 49.17.040, [49.17.]050 and [49.17.]060. WSR 96-22-048, § 296-306A-41003, filed 10/31/96, effective 12/1/96.]

WAC 296-307-41005 What definitions apply to this part? "Adequate ventilation," for fire prevention during normal operation, means the concentration of the gas in a gas-air mixture does not exceed 25% of the lower flammable limit.

"Containers" means all vessels, such as tanks, cylinders, or drums, used to transport or store LP-gases.

"DOT" means the federal Department of Transportation.

"DOT container" means a container that meets DOT regulations.

"DOT cylinder" means a cylinder that meets DOT regulations.

"DOT regulations/requirements/specifications" means the DOT regulations of 49 C.F.R. part 178.

"Liquefied petroleum gases" and "LP-gas" means any material that is composed mostly of any of the following: Hydrocarbons, or mixtures of them; propane; propylene; butanes (normal butane or iso-butane); and butylenes.

"PSIA" pounds per square inch absolute.

"PSIG" means pounds per square inch gauge.

"Systems" means an assembly of the container or containers, major devices such as vaporizers, safety-relief valves, excess flow valves, regulators, and piping connecting such parts.

"Vaporizer-burner" means an integral vaporizer-burner unit, dependent upon the heat generated by the burner to vaporize the liquid used for dehydrators or dryers.

[WSR 97-09-013, recodified as § 296-307-41005, filed 4/7/97, effective 4/7/97. Statutory Authority: RCW 49.17.040, [49.17.]050 and [49.17.]060. WSR 96-22-048, § 296-306A-41005, filed 10/31/96, effective 12/1/96.]

WAC 296-307-41007 When must LP-gas be odorized? You must ensure that all LP-gas is odorized by an approved agent to indicate by distinct odor, the presence of gas down to concentration in air of a maximum of 1/5 the lower limit of flammability.

Exception: Odorization is not required if it will create a hazard in further processing, or if it serves no useful purpose as a warning agent.

Note: The odorization requirement may be met by using 1.0 pounds of ethyl mercaptan, 1.0 pounds of thiophene, or 1.4 pounds of amyl mercaptan per ten thousand gallons of LP-gas. You may use any odorant and quantity that meets the requirements of this section.

[WSR 97-09-013, recodified as § 296-307-41007, filed 4/7/97, effective 4/7/97. Statutory Authority: RCW 49.17.040, [49.17.]050 and [49.17.]060. WSR 96-22-048, § 296-306A-41007, filed 10/31/96, effective 12/1/96.]

WAC 296-307-41009 Must LP-gas containers and equipment be approved? (1) Each system of DOT containers must have approved container valves, connectors, manifold valve assemblies, and regulators.

(2) Each non-DOT system using containers of 2,000 gallons or less water capacity, must have a container assembly, one or more regulators, and other necessary parts. The entire system, or the container assembly with the regulators, must be individually listed by a nationally recognized testing laboratory.

"Container assembly" means the container and fittings for all openings, including shut-off vales, excess flow valves, liquid-level gauging devices, safety-relief devices, and protective housing.

(3) In systems using containers of over 2,000 gallons water capacity, each regulator, container, valve, excess flow valve, gauging device, and relief valve, must be listed by a nationally recognized testing laboratory.

(4) All DOT containers must be constructed, tested, and stamped according to the DOT specifications effective at the date of their manufacture.

[WSR 97-09-013, recodified as § 296-307-41009, filed 4/7/97, effective 4/7/97. Statutory Authority: RCW 49.17.040, [49.17.]050 and [49.17.]060. WSR 96-22-048, § 296-306A-41009, filed 10/31/96, effective 12/1/96.]

WAC 296-307-41011 What construction and test requirements must containers meet? (1) Containers must be designed, constructed, and tested according to the *Rules for Construction of Unfired Pressure Vessels, section VIII, Division 1, American Society of Mechanical Engineers (ASME) Boiler and Pressure Vessel Code*, 1968 edition, unless otherwise specified.

(2) Containers constructed according to the 1949 and earlier editions of the ASME Code are exempt from U-2 through U-10 and U-19 of the code. Containers constructed according to U-70 in the 1949 and earlier editions do not meet the requirements of this section.

(3) Containers designed, constructed, and tested prior to July 1, 1961, according to the *Code for Unfired Pressure Vessels for Petroleum Liquids and Gases*, 1951 edition with 1954 Addenda, of the American Petroleum Institute and the American Society of Mechanical Engineers are considered in compliance. Containers constructed according to API-ASME Code do not have to comply with section I or with the appendix to section I. W-601 through W-606 in the 1943 and earlier editions do not apply.

[WSR 97-09-013, recodified as § 296-307-41011, filed 4/7/97, effective 4/7/97. Statutory Authority: RCW 49.17.040, [49.17.]050 and [49.17.]060. WSR 96-22-048, § 296-306A-41011, filed 10/31/96, effective 12/1/96.]

WAC 296-307-41013 How must containers be welded? (1) You must ensure that all welding to the shell, head, or any other part of the container subject to internal pressure, meets the requirements of the code under which the tank was fabricated. You may weld on saddle plates, lugs, or brackets attached to the container by the tank manufacturer.

(2) When you must repair or modify DOT containers by welding, you must return the container to a qualified manufacturer, making containers of the same type, to make the repair or modification according to DOT regulations.

[WSR 97-09-013, recodified as § 296-307-41013, filed 4/7/97, effective 4/7/97. Statutory Authority: RCW 49.17.040, [49.17.]050 and [49.17.]060. WSR 96-22-048, § 296-306A-41013, filed 10/31/96, effective 12/1/96.]

WAC 296-307-41015 How must containers be marked? (1) You must ensure that containers are marked according to DOT regulations or with the following:

(a) Indication that the container meets the requirements of the code under which it is constructed, and all marks required by that code.

(b) Indication whether the container is designed for underground or aboveground installation or both. If intended for both and different style hoods are provided, the marking must indicate the proper hood for each type of installation.

(c) The name and address of the supplier of the container, or with the trade name of the container.

(d) The water capacity of the container in pounds or gallons, United States standard.

(e) The pressure in psig, for which the container is designed.

(f) The wording "This container must not contain a product with a vapor pressure greater than _ psig at 100°F."

(g) The tare weight, for containers with a water capacity of three hundred pounds or less.

(h) Indication of the maximum fill level for liquid at temperatures between 20°F and 130°F. Markings must be in maximum increments of 20°F. This marking may be located on the liquid level gauging device.

Exception: Containers provided with fixed maximum level indicators or that are filled by weighing are exempt from this requirement.

(i) The outside surface area in square feet.

(2) The markings must be on a metal nameplate attached to the container so that it is visible after the container is installed.

(3) When LP-gas and one or more other gases are stored or used in the same area, the containers must be marked to identify their content. Marking must be according to American National Standard Z48.1-1954, "Method of Marking Portable Compressed Gas Containers to Identify the Material Contained."

[WSR 97-09-013, recodified as § 296-307-41015, filed 4/7/97, effective 4/7/97. Statutory Authority: RCW 49.17.040, [49.17.]050 and [49.17.]060. WSR 96-22-048, § 296-306A-41015, filed 10/31/96, effective 12/1/96.]

WAC 296-307-41017 Where must containers be located? You must ensure that containers are located according to the following:

(1) Containers and first stage regulating equipment are located outdoors.

Containers may be located indoors under any of the following conditions:

(a) In buildings used exclusively for container charging, vaporization pressure reduction, gas mixing, gas manufacturing, or distribution;

(b) When portable use is necessary and meets the requirements of WAC 296-307-41509;

(c) LP-gas fueled stationary or portable engines that meet the requirements of WAC 296-307-42521 or 296-307-42523;

(d) LP-gas fueled industrial trucks that meet the requirements of WAC 296-307-42525;

(e) LP-gas fueled vehicles garaged according to WAC 296-307-42527; or

(f) Containers awaiting use or resale when stored according to WAC 296-307-430.

(2) Each individual container is located away from the nearest important building, group of buildings, or line of adjoining property that may be built on, according to Table U-1.

TABLE U-1
Minimum distances

Water capacity per container	Containers Under-ground	Containers Above-ground	Between above-ground containers
Less than 125 gals[a]	10 feet	None	None
125-250 gals	10 feet	10 feet	None
251-500 gals	10 feet	10 feet	3 feet
501-2,000 gals	25 feet[b]	25 feet[b]	3 feet
2,001-30,000 gals	50 feet	50 feet	5 feet
30,001-70,000 gals	50 feet	75 feet	1/4 of sum of diameters of adjacent containers
70,001-90,000 gals	50 feet	100 feet	1/4 of sum of diameters of adjacent containers

(a) If the total water capacity of a multicontainer installation at a consumer site is 501 gallons or more, the minimum distance must comply with this table, applying the aggregate capacity instead of the capacity per container. For multiple installations, installations must be at least twenty-five feet apart. Do not apply the MINIMUM DISTANCES BETWEEN ABOVEGROUND CONTAINERS to such installations.

(b) Distance requirements may be reduced to 10 feet for a single container of 1200 gallons water capacity or less, if the container is at least 25 feet from any other LP-gas container of more than 125 gallons water capacity.

(c) In buildings devoted exclusively to gas manufacturing and distributing operations, the distances may be reduced if no containers of more than 500 gallons water capacity are located closer than ten feet to gas manufacturing and distributing buildings.

(3) Containers installed for use must not be stacked one above the other.

(4) In industrial installations involving containers of 180,000 gallons total water capacity or more, where serious exposures from the container to adjacent properties are common, firewalls or other means of protection designed and constructed according to good engineering practices are required.

(5) Readily ignitible material such as weeds and long dry grass is removed within ten feet of any container.

(6) The minimum separation between LP-gas containers and flammable liquid tanks is twenty feet; the minimum separation between a container and the centerline of the dike is ten feet.

EXCEPTION: This does not apply when LP-gas containers of 125 gallons or less capacity are installed adjacent to Class III flammable liquid tanks of 275 gallons or less capacity.

(7) The accumulation of flammable liquids under adjacent LP-gas containers is prevented by a means such as diking, diversion curbs, or grading.

(8) When dikes are used with flammable liquid tanks, no LP-gas containers are located within the diked area.

[Statutory Authority: RCW 49.17.040. WSR 98-24-096, § 296-307-41017, filed 12/1/98, effective 3/1/99. WSR 97-09-013, recodified as § 296-307-41017, filed 4/7/97, effective 4/7/97. Statutory Authority: RCW 49.17.040, [49.17.]050 and [49.17.]060. WSR 96-22-048, § 296-306A-41017, filed 10/31/96, effective 12/1/96.]

WAC 296-307-41019 What requirements apply to valves and accessories? (1) Valves, fittings, and accessories connected directly to the container including primary shut-off valves, must have a rated working pressure of at least 250 psig and must be of material and design suitable for LP-gas service. The use of cast iron for container valves, fittings, and accessories is prohibited. Container valves may be made of malleable or nodular iron.

(2) Connections to containers must have shut-off valves located as close to the container as practical.

Exception: This does not apply to safety-relief connections, liquid level gauging devices, and plugged openings.

(3) All required excess flow valves must close automatically at the rated flows of vapor or liquid specified by the manufacturer. The connections, lines, valves, and fittings must have a greater capacity than the rated flow of the excess flow valve.

(4) Liquid level gauging devices that are constructed so that outward flow is a maximum of that passed by a No. 54 drill size opening may be installed without excess flow valves.

(5) Openings from container or through fittings attached directly on container to which pressure gauge connection is made, need not have shut-off or excess flow valves if such openings are restricted to not larger than No. 54 drill size opening.

(6) Required excess flow and back pressure check valves must be located inside the container or outside where the line enters the container. When located outside, the installation must be made to prevent any stress beyond the excess flow or back pressure check valve from causing a break between the container and the valve.

Exception: This does not apply to systems using containers with a water capacity greater than 2-1/2 pounds (nominal one pound LP-gas capacity).

(7) Excess flow valves must be designed with a bypass that is a maximum of No. 60 drill size opening to allow equalization of pressures.

(8) Containers of more than 30 gallons water capacity and less than 2,000 gallons water capacity, filled on a volumetric basis, and manufactured after December 1, 1963, must be equipped for filling into the vapor space.

[WSR 97-09-013, recodified as § 296-307-41019, filed 4/7/97, effective 4/7/97. Statutory Authority: RCW 49.17.040, [49.17.]050 and [49.17.]060. WSR 96-22-048, § 296-306A-41019, filed 10/31/96, effective 12/1/96.]

WAC 296-307-41021 What requirements apply to piping, tubing, and fittings? (1) Pipe must be wrought iron or steel (black or galvanized), brass, copper, or aluminum alloy. Aluminum alloy pipe must be at least Schedule 40 according to the specifications for Aluminum Alloy Pipe, ANSI H38.7-1969 (ASTM, B241-1969), and must be suitably marked at each end of each length indicating compliance with ANSI specifications. Alloy 5456 is prohibited.

Exception: This does not apply to piping for LP-gas used as a motor fuel or to piping on commercial vehicles.

(2) Aluminum alloy pipe must be protected against external corrosion whenever:

(a) It is in contact with dissimilar metals other than galvanized steel; or

(b) Its location is subject to repeated wetting by such liquids as water (except rain water), detergents, sewage, or leaking from other piping; or

(c) It passes through flooring, plaster, masonry, or insulation.

Galvanized sheet steel or pipe, galvanized inside and out, are considered suitable protection.

(3) Aluminum pipe must be three-fourths inch nominal and shall not be used for pressures exceeding 20 psig. Aluminum alloy pipe must not be installed within six inches of the ground.

(a) Vapor piping with operating pressures not exceeding 125 psig must be suitable for a working pressure of at least 125 psig. Pipe must be at least Schedule 40 ASTM A-53-69, Grade B Electric Resistance Welded and Electric Flash Welded Pipe or equal.

(b) Vapor piping with operating pressures over 125 psig and all liquid piping must be suitable for a working pressure of at least 250 psig. Pipe must be at least Schedule 80 if joints are threaded or threaded and back welded. At least Schedule 40 (ASTM A-53-1969 Grade B Electric Resistance Welded and Electric Flash Welded Pipe or equal) must be used if joints are welded, or welded and flanged.

(4) Tubing must be seamless copper, brass, steel, or aluminum alloy. Copper tubing must be of Type K or L or equivalent as covered in the Specification for Seamless Copper Water Tube, ANSI H23.1-1970 (ASTM B88-1969). Aluminum alloy tubing must be of Type A or B or equivalent as covered in Specification ASTM B210-1968 and must be suitably marked every 18 inches indicating compliance with ASTM specifications. The minimum nominal wall thickness of copper tubing and aluminum alloy tubing must be as specified in Table U-2 and Table U-3.

TABLE U-2
WALL THICKNESS OF COPPER TUBING[1]

Note: The standard tube size is one-eighth-inch smaller than its nominal outside diameter.

Standard size (inches)	Nominal O.D. (inches)	Nominal wall thickness (inches)	
		Type K	Type L
1/4	0.375	0.035	0.030
3/8	0.500	0.049	0.035

Standard size (inches)	Nominal O.D. (inches)	Nominal wall thickness (inches) Type K	Type L
1/2	0.625	0.049	0.040
5/8	0.750	0.049	0.042
3/4	0.875	0.065	0.045
1	1.125	0.065	0.050
1 1/4	1.375	0.065	0.055
1 1/2	1.625	0.072	0.060
2	2.125	0.083	0.070

[1]Based on data in Specification for Seamless Copper Water Tubing, ANSI H23.1-1970 (ASTM B-88-69).

TABLE U-3
WALL THICKNESS OF ALUMINUM ALLOY TUBING[1]

Outside diameter (inches)	Nominal wall thickness (inches) Type A	Type B
3/8	0.035	0.049
1/2	0.035	0.049
5/8	0.042	0.049
3/4	0.049	0.058

[1]Based on data in Standard Specification for Aluminum-Alloy Drawn Seamless Coiled Tubes for Special Purpose Applications, ASTM B210-68.

(5) Aluminum alloy tubing must be protected against external corrosion whenever:

(a) It is in contact with dissimilar metals other than galvanized steel; or

(b) Its location is subject to repeated wetting by liquids such as water (except rainwater), detergents, sewage, or leakage from other piping; or

(c) It passes through flooring, plaster, masonry, or insulation.

Galvanized sheet steel or pipe, galvanized inside and out, are considered suitable protection.

(6) The maximum outside diameter for aluminum alloy tubing must be three-fourths inch and must not be used for pressures exceeding 20 psig. Aluminum alloy tubing installed within six inches of the ground is prohibited.

(7) In systems where the gas in liquid form enters the building without pressure reduction, only heavy walled seamless brass or copper tubing with an internal diameter a maximum of 3/32 inch, and a wall thickness of at least 3/64 inch shall be used.

Exception: This requirement does not apply to research and experimental laboratories, buildings or separate fire divisions of buildings used exclusively for housing internal combustion engines, and to commercial gas plants or bulk stations where containers are charged, nor to industrial vaporizer buildings, nor to buildings, structures, or equipment under construction or undergoing major renovation.

(8) Pipe joints must be screwed, flanged, welded, soldered, or brazed with a material having a melting point over 1,000°F. Joints on seamless copper, brass, steel, or aluminum alloy gas tubing shall be made by approved gas tubing fittings, or soldered or brazed with a material having a melting point over 1,000°F.

(9) For operating pressures of 125 psig or less, fittings must be designed for a pressure of at least 125 psig. For operating pressures above 125 psig, fittings must be designed for a minimum of 250 psig.

(10) Threaded cast iron pipe fittings are prohibited. Aluminum alloy fittings must be used with aluminum alloy pipe and tubing. Insulated fittings must be used where aluminum alloy pipe or tubing connects with a dissimilar metal. You may use malleable, nodular, or higher strength gray iron for fittings.

Note: Strainers, regulators, meters, compressors, pumps, etc., are not to be considered as pipe fittings.

(11) All materials such as valve seats, packing, gaskets, diaphragms, etc., must be resistant to the action of LP-gas under the service conditions to which they are subjected.

(12) All piping, tubing, or hose must be tested after assembly and proved free from leaks at least normal operating pressures. After installation, piping and tubing of all domestic and commercial systems must be tested and proved free of leaks using a manometer or equivalent device that will indicate a drop in pressure. Test made by flame is prohibited.

(13) You must ensure that piping allows for expansion, contraction, jarring, and vibration, and settling. You may use flexible connections.

(14) Piping outside buildings may be buried, aboveground, or both, but must be well supported and protected against physical damage. Where soil conditions warrant, all piping must be protected against corrosion. Where condensation may occur, the piping must be pitched back to the container, or you must provide a means for revaporization of the condensate.

[WSR 97-09-013, recodified as § 296-307-41021, filed 4/7/97, effective 4/7/97. Statutory Authority: RCW 49.17.040, [49.17.]050 and [49.17.]060. WSR 96-22-048, § 296-306A-41021, filed 10/31/96, effective 12/1/96.]

WAC 296-307-41023 What specifications must hoses meet? (1) Hose shall be fabricated of materials that are resistant to the action of LP-gas in the liquid and vapor phases. If wire braid is used for reinforcing the hose, it must be of corrosion-resistant material such as stainless steel.

(2) Hose subject to container pressure must be marked "LP-gas" or "LPG" at not greater than ten-foot intervals.

(3) Hose subject to container pressure must be designed for a bursting pressure of not less than 1,250 psig.

(4) Hose subject to container pressure must be listed by a nationally recognized testing laboratory.

(5) Hose connections subject to container pressure must be able to withstand, without leaking, a test pressure of not less than 500 psig.

(6) Hose and hose connections on the low-pressure side of the regulator or reducing valve must be designed for a bursting pressure of not less than 125 psig or five times the set pressure of the relief devices protecting that portion of the system, whichever is higher.

(7) Hose may be used on the low-pressure side of regulators to connect to other than domestic and commercial gas appliances under the following conditions:

(a) The appliances connected with hose are portable and need a flexible connection.

(b) For use inside buildings, the hose is of minimum practical length, but is a maximum of six feet. Hose must not extend from one room to another, nor pass through any walls, partitions, ceilings, or floors. Such hose must not be concealed from view or used in a concealed location.

Exception: For use outside of buildings, the hose may exceed this length but must be kept as short as practical.

(c) The hose must be approved and must not be used where it may be exposed to temperatures above 125°F. The hose must be securely connected to the appliance. Rubber slip ends are prohibited.

(d) The shut-off valve for an appliance connected by hose must be in the metal pipe or tubing and not at the appliance end of the hose. When shut-off valves are installed close to each other, precautions must be taken to prevent operation of the wrong valve.

(e) Hose used for connecting to wall outlets must be protected from physical damage.

[WSR 97-09-013, recodified as § 296-307-41023, filed 4/7/97, effective 4/7/97. Statutory Authority: RCW 49.17.040, [49.17.]050 and [49.17.]060. WSR 96-22-048, § 296-306A-41023, filed 10/31/96, effective 12/1/96.]

WAC 296-307-41025 What requirements apply to safety devices? (1) Every container except those constructed according to DOT specifications and every vaporizer (except motor fuel vaporizers and vaporizers described in WAC 296-307-41029(3) and 296-307-42007 (6)(a) whether heated by artificial means or not, must have one or more safety-relief valves of spring-loaded or equivalent type. These valves must be arranged to afford free vent to the outer air with discharge not less than five feet horizontally away from any opening into the building that is below such discharge. The rate of discharge must be according to the requirements of subsection (2) or (4) of this section.

(2) Minimum required rate of discharge in cubic feet per minute of air at one hundred twenty percent of the maximum permitted start to discharge pressure for safety-relief valves to be used on containers other than those constructed according to DOT specification must be as follows:

Surface area sq. ft.	Flow rate CFM air	Surface area sq. ft.	Flow rate CFM air	Surface area sq. ft.	Flow rate CFM air
20 or less	626	170	3,620	550	9,470
25	751	175	3,700	600	10,170
30	872	180	3,790	650	10,860
35	990	185	3,880	700	11,550
40	1,100	190	3,960	750	12,220
45	1,220	195	4,050	850	13,540
50	1,330	200	4,130	900	14,190
55	1,430	210	4,300	950	14,830
60	1,540	220	4,470	1,000	15,470
65	1,640	230	4,630	1,050	16,100
70	1,750	240	4,800	1,100	16,720
75	1,850	250	4,960	1,150	17,350
80	1,950	260	5,130	1,200	17,960
85	2,050	270	5,290	1,250	18,570
90	2,150	280	5,450	1,300	19,180
95	2,240	290	5,610	1,350	19,780
100	2,340	300	5,760	1,400	20,380
105	2,440	310	5,920	1,450	20,980
110	2,530	320	6,080	1,500	21,570
115	2,630	330	6,230	1,550	22,160
120	2,720	340	6,390	1,600	22,740
125	2,810	350	6,540	1,650	23,320
130	2,900	360	6,690	1,700	23,900
135	2,990	370	6,840	1,750	24,470
140	3,080	380	7,000	1,800	25,050
145	3,170	390	7,150	1,850	25,620
150	3,260	400	7,300	1,900	26,180
155	3,350	450	8,040	1,950	26,750
160	3,440	500	8,760	2,000	27,310
165	3,530				

Surface area = total outside surface area of container in square feet.

(3) When the surface area is not stamped on the name plate or when the marking is not legible, calculate the area with one of the following formulas:

• Hemispherical heads: Area = (overall length) X (outside diameter) X 3.1416.

• Other than hemispherical heads: Area = (overall length) + 0.3 (outside diameter) X (outside diameter) X 3.1416.

Note: This formula is not exact, but will give results within the limits of practical accuracy for the sole purpose of sizing relief valves.

• Spherical container: Area = (outside diameter)^2 X 3.1416.

• Flow rate: CFM air = required flow capacity in cubic feet per minute of air at standard conditions, 60°F and atmospheric pressure (14.7 psia).

For containers with total outside surface area greater than 2,000 sq. ft., the formula is: Flow rate CFM air = 53.632 A0.82 where A = outside surface area of the container in square feet.

Valves not marked "air" have flow rate marking in cubic feet per minute of LP-gas. These can be converted to ratings in cubic feet per minute of air by multiplying the LP-gas ratings by factors listed below. Air flow ratings can be con-

verted to ratings in cubic feet per minute of LP-gas by dividing the air ratings by the factors listed below.

AIR CONVERSION FACTORS

Container type	100	125	150	175	200
Air conversion factor	1.162	1.142	1.113	1.078	1.010

(4) The minimum required rate of discharge for safety-relief valves for LP-gas vaporizers (steam heated, water heated, and direct fired) must be determined as follows:

(a) Obtain the total surface area by adding the surface area of vaporizer shell in square feet directly in contact with LP-gas and the heat exchanged surface area in square feet directly in contact with LP-gas.

(b) Obtain the minimum required rate of discharge in cubic feet of air per minute, at 60°F and 14.7 psia from subsection (2) of this section, for this total surface area.

(5) Container and vaporizer safety-relief valves must be set to start to discharge, with relation to the design pressure of the container, according to the following:

Containers	Minimum (percent)	Maximum (percent)
ASME Code; Par. U-68, U-69—1949 and earlier editions	110	*125
ASME Code; Par. U-200, U-201—1949 edition	88	*100
ASME Code—1950, 1952, 1956, 1959, 1962, 1965 and 1968 (Division I) editions	88	*100
API—ASME Code—all editions	88	*100
DOT	As prescribed in 49 C.F.R. Chapter I	

*Manufacturers of safety-relief valves are allowed a plus tolerance not exceeding 10% of the set pressure marked on the valve.

(6) Safety-relief devices used with systems employing non-DOT containers must be constructed to discharge at not less than the rates shown in subsection (2) of this section, before the pressure is in excess of 120% of the maximum (not including the 10% referred to in subsection (5) of this section) permitted start-to-discharge pressure setting of the device.

(7) In high temperature areas, you must use a lower vapor pressure product or a higher designed pressure vessel to prevent the safety valves from opening. The tanks may be protected by cooling devices such as spraying, shading, or other means.

(8) Safety-relief valves must be arranged to minimize tampering. For external pressure setting or adjustment, the relief valves must have an approved sealable adjustment.

(9) Shut-off valves are prohibited between safety-relief devices and the container, equipment, or piping.

EXCEPTION: A shut-off valve may be used where the arrangement of the valve allows the required capacity flow through the safety-relief device.

(10) Safety-relief valves must have direct communication with the vapor space of the container.

(11) Each safety-relief valve must be plainly and permanently marked with the following:

(a) Container type of the pressure vessel on which the valve is designed to be installed;

(b) The pressure in psig at which the valve is set to discharge;

(c) The actual rate of discharge of the valve in cubic feet per minute of air at 60°F and 14.7 psia; and

(d) The manufacturer's name and catalog number.

For example: T200-250-4050 AIR: Indicates that the valve is suitable for use on a Type 200 container, that it is set to start to discharge at 250 psig; and that its rate of discharge is 4,050 cubic feet per minute of air.

(12) Safety-relief valve assemblies and their connections must be large enough to provide the required rate of flow for the container on which they are installed.

(13) A hydrostatic relief valve must be installed between each pair of shut-off valves on LP-gas liquid piping. The start-to-discharge pressure setting of such relief valves must be a maximum of 500 psig. The minimum setting on relief valves installed in piping connected to non-DOT containers shall be 140% of the container relief valve setting. For piping connected to DOT containers, the minimum must be 400 psig. The relief valve should not be installed in the pump discharge piping if the same protection can be provided by installing the relief valve in the suction piping. The start-to-discharge pressure setting of such a relief valve, if installed on the discharge side of a pump, must exceed the maximum pressure permitted by the recirculation device in the system.

(14) The discharge from any safety-relief device must not terminate in or beneath any building.

EXCEPTION: This requirement does not apply to relief devices covered by WAC 296-307-41017(1), 296-307-41507(1), or 296-307-41509.

(15) Container safety-relief devices and regulator relief vents must be located at least five feet in any direction from air openings into sealed combustion system appliances or mechanical ventilation air intakes.

[Statutory Authority: RCW 49.17.040. WSR 98-24-096, § 296-307-41025, filed 12/1/98, effective 3/1/99. WSR 97-09-013, recodified as § 296-307-41025, filed 4/7/97, effective 4/7/97. Statutory Authority: RCW 49.17.040, [49.17.]050 and [49.17.]060. WSR 96-22-048, § 296-306A-41025, filed 10/31/96, effective 12/1/96.]

WAC 296-307-41027 How must indirect fired vaporizers be constructed and installed? Indirect fired vaporizers utilizing steam, water, or other heating medium must be constructed and installed according to the following:

(1) Vaporizers must be constructed according to the requirements of WAC 296-307-41011 and must be permanently marked as follows:

(a) With the code marking signifying the specifications to which the vaporizer is constructed;

(b) With the allowable working pressure and temperature for which the vaporizer is designed;

(c) With the sum of the outside surface area and the inside heat exchange surface area expressed in square feet; and

(d) With the name or symbol of the manufacturer.

(2) Vaporizers with an inside diameter of six inches or less exempted by the ASME Unfired Pressure Vessel Code, Section VIII of the ASME Boiler and Pressure Vessel Code, 1968, must have a design pressure of at least 250 psig and need not be permanently marked.

(3) Heating or cooling coils installed inside a storage container are prohibited.

(4) Vaporizers may be installed in buildings, rooms, sheds, or lean-tos used exclusively for gas manufacturing or distribution, or in other light, noncombustible structures that are well ventilated near the floor line and roof.

Exception: When vaporizing and/or mixing equipment is in a structure not used exclusively for gas manufacturing or distribution, the structure or room must be separated from the remainder of the building. The separation must be a wall designed to withstand a static pressure of at least 100 pounds per square foot. This wall must have no openings or pipe or conduit passing through it. Such structure or room must have adequate ventilation and must have a roof or at least one exterior wall of lightweight construction.

(5) All DOT vaporizers must have, at or near the discharge, a safety-relief valve providing an effective rate of discharge according to WAC 296-307-41025.

(6) The heating medium lines into and out of the vaporizer must have a mechanism to prevent the flow of gas into the heat systems in the event of tube rupture in the vaporizer. Vaporizers must have an automatic means to prevent liquid from passing through the vaporizers to the gas discharge piping.

(7) The device that supplies heat to produce steam, hot water, or other heat may be installed in a building, compartment, room, or lean-to ventilated near the floorline and roof to the outside. The device must be separated from all compartments or rooms containing LP-gas vaporizers, pumps, and central gas mixing devices by a wall designed to withstand a static pressure of at least 100 pounds per square foot. This wall must have no openings or pipes or conduit passing through it.

Exception: This requirement does not apply to the domestic water heaters that may supply heat for a vaporizer in a domestic system.

(8) Gas-fired heating systems supplying heat exclusively for vaporization must have automatic safety devices to shut off the flow of gas to main burners, if the pilot light should fail.

(9) Vaporizers may be an integral part of a fuel storage container directly connected to the liquid section or gas section or both.

(10) Fusible plugs are prohibited on vaporizers.

(11) Vaporizer houses must not have unprotected drains to sewers or sump pits.

[Statutory Authority: RCW 49.17.040. WSR 98-24-096, § 296-307-41027, filed 12/1/98, effective 3/1/99. WSR 97-09-013, recodified as § 296-307-41027, filed 4/7/97, effective 4/7/97. Statutory Authority: RCW 49.17.040, [49.17.]050 and [49.17.]060. WSR 96-22-048, § 296-306A-41027, filed 10/31/96, effective 12/1/96.]

WAC 296-307-41029 How must atmospheric vaporizers be constructed and installed? Atmospheric vaporizers using heat from the ground or surrounding air must be installed as follows:

(1) Buried underground; or

(2) Located inside the building near where the pipe enters the building, if the capacity of the unit does not exceed one quart;

(3) Vaporizers of less than one quart capacity heated by the ground or surrounding air, may be installed without safety-relief valves if tests show that the assembly is safe.

[WSR 97-09-013, recodified as § 296-307-41029, filed 4/7/97, effective 4/7/97. Statutory Authority: RCW 49.17.040, [49.17.]050 and [49.17.]060. WSR 96-22-048, § 296-306A-41029, filed 10/31/96, effective 12/1/96.]

WAC 296-307-41031 How must direct gas-fired vaporizers be constructed and installed? Direct gas-fired vaporizers must be constructed, marked, and installed as follows:

(1) According to the requirements of the *American Society of Mechanical Engineers Boiler and Pressure Vessel Code*, 1968, that apply to the maximum working conditions for which the vaporizer is designed.

(2) With the name of the manufacturer; rated Btu input to the burner; the area of the heat exchange surface in square feet; the outside surface of the vaporizer in square feet; and the maximum vaporizing capacity in gallons per hour.

(3) Vaporizers may be connected to the liquid section or the gas section of the storage container, or both. The container must have a manually operated valve in each connection that completely shuts off when desired, all flow of gas or liquid from container to vaporizer.

(4) Vaporizers with a maximum capacity of 35 gallons per hour must be located at least 5 feet from container shut-off valves. Vaporizers more than 35 gallon capacity but a maximum of 100 gallons per hour must be located at least 10 feet from the container shut-off valves. Vaporizers having a capacity greater than 100 gallons per hour must be located at least 15 feet from container shut-off valves.

(5) Vaporizers may be installed in buildings, rooms, housings, sheds, or lean-tos used exclusively for vaporizing or mixing of LP-gas. Vaporizing housing structures must be noncombustible, and well ventilated near the floorline and the highest point of the roof. When vaporizer and/or mixing equipment is located in a structure or room attached to or within a building, such structure or room must be separated from the remainder of the building by a wall designed to withstand a static pressure of at least 100 pounds per square foot. This wall must have no openings or pipes or conduit passing through it. The structure or room must have adequate ventilation, and a roof or at least one exterior wall of lightweight construction.

(6) Vaporizers must have at or near the discharge, a safety-relief valve providing an effective rate of discharge according to WAC 296-307-41025. The relief valve must be located where it is not subjected to temperatures over 140°F.

(7) Vaporizers must have suitable automatic means to prevent liquid passing from the vaporizer to the gas discharge piping of the vaporizer.

(8) Vaporizers must have means for manually turning off the gas to the main burner and pilot.

(9) Vaporizers must have automatic safety devices to shut off the flow of gas to main burners if the pilot light should fail. When the flow through the pilot exceeds 2,000 Btu per hour, the pilot also must have an automatic safety

device to shut off the flow of gas to the pilot should the pilot flame be extinguished.

(10) Pressure regulating and pressure reducing equipment located within 10 feet of a direct fired vaporizer must be separated from the open flame by an airtight noncombustible partition.

(11) Except as provided in subsection (5) of this section, the following minimum distances must be maintained between direct fired vaporizers and the nearest important building, group of buildings, or line of adjoining property that may be built on:

(a) Ten feet for vaporizers with a vaporizing capacity of 15 gallons per hour or less;

(b) Twenty-five feet for vaporizers with a vaporizing capacity of 16-100 gallons per hour;

(c) Fifty feet for vaporizers with a vaporizing capacity over 100 gallons per hour.

(12) Direct fired vaporizers must not raise the product pressure above the design pressure of the vaporizer equipment or above the pressure shown in the second column of Table U-8.

(13) Fusible plugs are prohibited on vaporizers.

(14) Vaporizers must not have unprotected drains to sewers or sump pits.

[Statutory Authority: RCW 49.17.040. WSR 98-24-096, § 296-307-41031, filed 12/1/98, effective 3/1/99. WSR 97-09-013, recodified as § 296-307-41031, filed 4/7/97, effective 4/7/97. Statutory Authority: RCW 49.17.040, [49.17.]050 and [49.17.]060. WSR 96-22-048, § 296-306A-41031, filed 10/31/96, effective 12/1/96.]

WAC 296-307-41033 How must direct gas-fired tank heaters be constructed and installed? Direct gas-fired tank heaters must be constructed and installed as follows:

(1) Direct gas-fired tank heaters, and tanks to which they are applied, must only be installed aboveground.

(2) Tank heaters must be permanently marked with the name of the manufacturer, the rated Btu input to the burner, and the maximum vaporizing capacity in gallons per hour.

Note: Tank heaters may be an integral part of a fuel storage container directly connected to the container liquid section, or vapor section, or both.

(3) Tank heaters must have a means for manually turning off the gas to the main burner and pilot.

(4) Tank heaters must have an automatic safety device to shut off the flow of gas to main burners, if the pilot light should fail. When flow through pilot exceeds 2,000 Btu per hour, the pilot also must have an automatic safety device to shut off the flow of gas to the pilot should the pilot flame be extinguished.

(5) Pressure regulating and pressure reducing equipment if located within ten feet of a direct fired tank heater must be separated from the open flame by a substantially airtight noncombustible partition.

(6) The following minimum distances must be maintained between a storage tank heated by a direct fired tank heater and the nearest important building, group of buildings, or line of adjoining property that may be built on:

(a) Ten feet for storage containers of less than 500 gallons water capacity;

(b) Twenty-five feet for storage containers of 500-1,200 gallons water capacity;

(c) Fifty feet for storage containers of over 1,200 gallons water capacity.

(7) No direct fired tank heater may raise the product pressure within the storage container over 75% of the pressure in the second column of Table U-8.

[WSR 97-09-013, recodified as § 296-307-41033, filed 4/7/97, effective 4/7/97. Statutory Authority: RCW 49.17.040, [49.17.]050 and [49.17.]060. WSR 96-22-048, § 296-306A-41033, filed 10/31/96, effective 12/1/96.]

WAC 296-307-41035 How must dehydrators be constructed and installed? The vaporizer section of vaporizer-burners used for dehydrators or dryers must be located outdoors; they must be constructed and installed as follows:

(1) Vaporizer-burners must have a minimum design pressure of 250 psig with a factor safety of five.

(2) Manually operated positive shut-off valves must be located at the containers to shut off all flow to the vaporizer-burners.

(3) Minimum distances between storage containers and vaporizer-burners must be as follows:

Water capacity per container (gallons)	Minimum distances (feet)
Less than 501	10
501 to 2,000	25
Over 2,000	50

(4) The vaporizer section of vaporizer-burners must be protected by a hydrostatic relief valve. The relief valve must be located where it is not subjected to temperatures over 140°F. The start-to-discharge pressure setting must protect the components involved, and be at least 250 psig. The discharge must be directed upward and away from component parts of the equipment and away from operating personnel.

(5) Vaporizer-burners must have means for manually turning off the gas to the main burner and pilot.

(6) Vaporizer-burners must have automatic safety devices to shut off the flow of gas to the main burner and pilot in the event the pilot is extinguished.

(7) Pressure regulating and control equipment must be located or protected so that the temperatures surrounding this equipment shall not exceed 140°F.

Exception: Equipment components may be used at higher temperatures if designed to withstand such temperatures.

(8) Pressure regulating and control equipment when located downstream of the vaporizer must be designed to withstand the maximum discharge temperature of the vapor.

(9) Fusible plugs are prohibited on the vaporizer section of vaporizer-burners.

(10) Vaporizer coils or jackets must be made of ferrous metal or high temperature alloys.

(11) Equipment utilizing vaporizer-burners must have automatic shutoff devices upstream and downstream of the vaporizer section connected so as to operate in the event of excessive temperature, flame failure, and, if applicable, insufficient airflow.

[WSR 97-09-013, recodified as § 296-307-41035, filed 4/7/97, effective 4/7/97. Statutory Authority: RCW 49.17.040, [49.17.]050 and [49.17.]060. WSR 96-22-048, § 296-306A-41035, filed 10/31/96, effective 12/1/96.]

WAC 296-307-41037 What are the maximum filling densities? (1) "Filling density" means the percent ratio of the weight of the gas in a container to the weight of water the container will hold at 60°F. All containers shall be filled according to the filling densities shown in Table U-4.

TABLE U-4
MAXIMUM PERMITTED FILLING DENSITY

Specifc Gravity at 60°F (15.6°C)	Aboveground containers: 0 to 1,200 U.S. gals. (1,000 imp. gal. 4,500 liters) total water cap	Aboveground containers: 0 to 1,200 U.S. gals. (1,000 imp. gal. 4,500 liters) total water cap	Underground containers, all capacities
	Percent	Percent	Percent
.496-.503	41	44	45
.504-.510	42	45	46
.511-.519	43	46	47
.520-.527	44	47	48
.528-.536	45	48	49
.537-.544	46	49	50
.545-.552	47	50	51
.553-.560	48	51	52
.561-.568	49	52	53
.569-.576	50	53	54
.577-.584	51	54	55
.585-.592	52	55	56
.593-.600	53	56	57

(2) Any container including mobile cargo tanks and portable tank containers regardless of size or construction, shipped under DOT jurisdiction or constructed according to DOT specifications must be charged according to DOT requirements.

(3) Exception: Portable containers not subject to DOT jurisdiction must be filled either by weight, or by volume using a fixed length dip tube gauging device.

[WSR 97-09-013, recodified as § 296-307-41037, filed 4/7/97, effective 4/7/97. Statutory Authority: RCW 49.17.040, [49.17.]050 and [49.17.]060. WSR 96-22-048, § 296-306A-41037, filed 10/31/96, effective 12/1/96.]

WAC 296-307-41039 What requirements apply to LP-gas in buildings? (1) Vapor may be piped into buildings at pressures over 20 psig only if the buildings or separate areas thereof:

(a) Are constructed according to this section;

(b) Are used exclusively to house equipment for vaporization, pressure reduction, gas mixing, gas manufacturing, or distribution, or to house internal combustion engines, industrial processes, research and experimental laboratories, or equipment and processes using such gas and having similar hazard;

(c) Are buildings, structures, or equipment under construction or undergoing major renovation.

(2) Liquid may be permitted in buildings as follows:

(a) In buildings, or separate areas of buildings, used exclusively to house equipment for vaporization, pressure reduction, gas mixing, gas manufacturing, or distribution, or to house internal combustion engines, industrial processes, research and experimental laboratories, or equipment and processes using such gas and having similar hazard; and when such buildings, or separate areas are constructed according to this section.

(b) In buildings, structures, or equipment under construction or undergoing major renovation if the temporary piping meets the following conditions:

(i) Liquid piping inside the building meets the requirements of WAC 296-307-41021 and is a maximum of three-fourths iron pipe size. Copper tubing with an outside diameter of 3/4 inch or less may be used if it meets the requirements of Type K of Specifications for Seamless Water Tube, ANSI H23.1-1970 (ASTM B88-1969). (See Table U-2.) All such piping must be protected against construction hazards. Liquid piping inside buildings must be kept to a minimum. Such piping must be securely fastened to walls or other surfaces to provide adequate protection from breakage and located to subject the liquid line to the lowest ambient temperatures.

(ii) A shut-off valve must be installed in each intermediate branch line where it takes off the main line and must be readily accessible. A shut-off valve must also be placed at the appliance end of the intermediate branch line. Such shut-off valve must be upstream of any flexible connector used with the appliance.

(iii) Suitable excess flow valves must be installed in the container outlet line supplying liquid LP-gas to the building. A suitable excess flow valve must be installed immediately downstream of each shut-off valve. Excess flow valves must be installed where piping size is reduced and must be sized appropriately.

(iv) Hydrostatic relief valves must be installed according to WAC 296-307-41025(13).

(v) Using hose to carry liquid between the container and the building or at any point in the liquid line, except at the appliance connector, is prohibited.

(vi) Where flexible connectors are necessary for appliance installation, such connectors must be as short as practical and must meet the requirements of WAC 296-307-41021(4) or 296-307-41023.

(vii) Release of fuel when any section of piping or appliances is disconnected must be minimized by either of the following methods:

(A) Using an approved automatic quick-closing coupling (closing in both directions when coupled in the fuel line); or

(B) Closing the valve nearest to the appliance and allowing the appliance to operate until the fuel in the line is consumed.

(viii) See WAC 296-307-41509 for the conditions under which portable containers may be brought indoors.

[Statutory Authority: RCW 49.17.040. WSR 98-24-096, § 296-307-41039, filed 12/1/98, effective 3/1/99. WSR 97-09-013, recodified as § 296-307-41039, filed 4/7/97, effective 4/7/97. Statutory Authority: RCW 49.17.040, [49.17.]050 and [49.17.]060. WSR 96-22-048, § 296-306A-41039, filed 10/31/96, effective 12/1/96.]

WAC 296-307-41041 What requirements apply to transfer of liquids? When transferring liquids, you must ensure that:

(1) At least one attendant remains close to the transfer connection from the time the connections are first made until

they are finally disconnected, during the transfer of the product.

(2) Containers must be filled or used only upon authorization of the owner.

(3) Containers manufactured according to DOT specifications authorized by DOT as a "single trip" or "nonrefillable container" must not be refilled or reused in LP-gas service.

(4) Gas or liquid must not be vented to the atmosphere to assist in transferring contents of one container to another, except as provided in WAC 296-307-42509(4). A listed pump may use LP-gas in the vapor phase as a source of energy. The gas may be vented to the atmosphere at a rate not to exceed that from a No. 31 drill size opening, if venting and liquid transfer are located at least fifty feet from the nearest important building.

(5) Filling fuel containers for industrial trucks or motor vehicles from industrial bulk storage containers must be performed at least ten feet from the nearest important masonry-walled building or at least twenty-five feet from the nearest important building or other construction and always at least twenty-five feet from any building opening.

(6) Filling portable containers, containers mounted on skids, fuel containers on farm tractors, or similar applications, from storage containers used in domestic or commercial service, must be performed at least fifty feet from the nearest important building.

(7) The filling connection and the vent from the liquid level gauges in containers, filled at point of installation, must be at least ten feet in any direction from air openings into sealed combustion system appliances or mechanical ventilation air intakes.

(8) Fuel supply containers must be gauged and charged only in the open air or in buildings especially provided for that purpose.

(9) Marketers and users must exercise precaution to ensure that only those gases for which the system is designed, examined, and listed, are employed in its operation, particularly with regard to pressures.

(10) Pumps or compressors must be designed for use with LP-gas. When compressors are used they must normally take suction from the vapor space of the container being filled and discharge to the vapor space of the container being emptied.

(11) Pumping systems, when equipped with a positive displacement pump, must include a recirculating device that limits the differential pressure on the pump under normal operating conditions to the maximum differential pressure rating of the pump. The discharge of the pumping system must be protected so that pressure is a maximum of 350 psig. If a recirculation system discharges into the supply tank and contains a manual shut-off valve, an adequate secondary safety recirculation system must be incorporated that has no means of rendering it inoperative. Manual shut-off valves in recirculation systems must be kept open except during an emergency or when repairs are being made to the system.

(12) When necessary, unloading piping or hoses must have suitable bleeder valves for relieving pressure before disconnection.

(13) Agricultural air moving equipment, including crop dryers, shall be shut down when supply containers are filling unless the air intakes and sources of ignition on the equipment are located fifty feet or more from the container.

(14) Agricultural equipment employing open flames or equipment with integral containers, such as flame cultivators, weed burners, and tractors, must be shut down during refueling.

[Statutory Authority: RCW 49.17.040. WSR 98-24-096, § 296-307-41041, filed 12/1/98, effective 3/1/99. WSR 97-09-013, recodified as § 296-307-41041, filed 4/7/97, effective 4/7/97. Statutory Authority: RCW 49.17.040, [49.17.]050 and [49.17.]060. WSR 96-22-048, § 296-306A-41041, filed 10/31/96, effective 12/1/96.]

WAC 296-307-41043 Must workers be trained? Workers performing installation, removal, operation, and maintenance work must be properly trained in that function.

[WSR 97-09-013, recodified as § 296-307-41043, filed 4/7/97, effective 4/7/97. Statutory Authority: RCW 49.17.040, [49.17.]050 and [49.17.]060. WSR 96-22-048, § 296-306A-41043, filed 10/31/96, effective 12/1/96.]

WAC 296-307-41045 What fire protection must be provided for LP-gas installations? (1) Open flames or other sources of ignition are prohibited in vaporizer rooms (except those housing direct-fired vaporizers), pumphouses, container charging rooms or other similar locations. Direct-fired vaporizers are prohibited in pumphouses or container charging rooms.

Note: LP-gas storage containers do not require lightning protection. Since LP-gas is contained in a closed system of piping and equipment, the system need not be electrically conductive or electrically bonded for protection against static electricity. (See NFPA No. 77-1972-1973, Recommended Practice for Static Electricity.)

(2) Open flames (except as provided in subsection (1) of this section), cutting or welding, portable electric tools, and extension lights capable of igniting LP-gas, are prohibited within classified areas specified in Table U-5 unless the LP-gas facilities have been freed of all liquid and vapor, or special precautions observed under carefully controlled conditions.

[WSR 97-09-013, recodified as § 296-307-41045, filed 4/7/97, effective 4/7/97. Statutory Authority: RCW 49.17.040, [49.17.]050 and [49.17.]060. WSR 96-22-048, § 296-306A-41045, filed 10/31/96, effective 12/1/96.]

WAC 296-307-41047 What electrical requirements apply to LP-gas installations? (1) Electrical equipment and wiring must be specified by and installed according to chapter 296-307 WAC Part T, for ordinary locations.

(2) Fixed electrical equipment and wiring installed within classified areas must comply with Table U-5 and must be installed according to chapter 296-307 WAC Part T.

EXCEPTION: This provision does not apply to fixed electrical equipment at residential or commercial installations of LP-gas systems, LP-gas used as a motor fuel, or to LP-gas system installations on commercial vehicles.

TABLE U-5

Part	Location	Extent of classified area[1]	Equipment shall be suitable for Class I, Group D[2]
A	Storage containers other than DOT cylinders	Within 15 feet in all directions from connections, except connections otherwise covered in this table	Division 2
B	Tank vehicle and tank car loading and unloading[3]	Within 5 feet in all directions from connections regularly made or disconnected for product transfer	Division 1
		Beyond 5 feet but within 15 feet in all directions from a point where connections are regularly made or disconnected and within the cylindrical volume between the horizontal equator of the sphere and grade (See Figure H-1)	Division 2
C	Gauge vent openings other than those on DOT cylinders	Within 5 feet in all directions from point of discharge	Division 1
		Beyond 5 feet but within 15 feet in all directions from point of discharge	Division 2
D	Relief valve discharge other than those on DOT cylinders	Within direct path of discharge	Division 1 *Note*: Fixed electrical equipment should not be installed
		Within 5 feet in all directions from point of discharge	Division 1
		Beyond 5 feet but within 15 feet in all directions from point of discharge except within the direct path of discharge	Division 2
E	Pumps, compressors, gas-air mixers and vaporizers other than direct fired		
	Indoors without ventilation	Entire room and any adjacent room not separated by a gastight partition	Division 1
		Within 15 feet of the exterior side of any exterior wall or roof that is not vaportight or within 15 feet of any exterior opening	Division 2
	Indoors with adequate ventilation[4]	Entire room and any adjacent room not separated by a gastight partition	Division 2
	Outdoors in open air at or above grade	Within 15 feet in all directions from this equipment and within the cylindrical volume between the horizontal equator of the sphere and grade (See Figure H-1)	Division 2
F	Service station dispensing units	Entire space within dispenser enclosure, and 18 inches horizontally from enclosure exterior up to an elevation 4 ft. above dispenser base. Entire pit or open space beneath dispenser	Division 1
		Up to 18 inches above grade within 20 ft. horizontally from any edge of enclosure	Division 2
		Note: For pits within this area, see Part F of this table	
G	Pits or trenches containing or located beneath LP-gas valves, pumps, compressors, regulators, and similar equipment		
	Without mechanical ventilation	Entire pit or trench	Division 1
		Entire room and any adjacent room not separated by a gastight partition	Division 2
		Within 15 feet in all directions from pit or trench when located outdoors	Division 2
	With adequate mechanical ventilation	Entire pit or trench	Division 2
		Entire room and any adjacent room not separated by a gastight partition	Division 2
		Within 15 feet in all directions from pit or trench when located outdoors	Division 2
H	Special buildings or rooms for storage of portable containers	Entire room	Division 2
I	Pipelines and connections containing operational bleeds, drips, vents or drains	Within 5 ft. in all directions from point of discharge	Division 1
		Beyond 5 ft. from point of discharge, same as Part E of this table	
J	Container filling		
	Indoors without ventilation	Entire room	Division 1
	Indoors with adequate ventilation[4]	Within 5 feet in all directions from connections regularly made or disconnected for product transfer	Division 1

Part	Location	Extent of classified area[1]	Equipment shall be suitable for Class I, Group D[2]
		Beyond 5 feet and entire room	Division 2
	Outdoors in open air	Within 5 feet in all directions from connections regularly made or disconnected for product transfer	Division 1
		Beyond 5 feet but within 15 feet in all directions from a point where connections are regularly made or disconnected and within the cylindrical volume between the horizontal equator of the sphere and grade (See Fig. H-1.)	Division 2

1 The classified area must not extend beyond an unpierced wall, roof, or solid vaportight partition.

2 See chapter 296-46 WAC, and chapter 296-306A WAC Part T.

3 When classifying the extent of a hazardous area, consider the possible variations in the spotting of tank cars and tank vehicles at the unloading points and the effect these variations of actual spotting point may have on the point of connection.

4 Ventilation, either natural or mechanical, is considered adequate when the concentration of the gas in a gas-air mixture does not exceed twenty-five percent of the lower flammable limit under normal operating conditions.

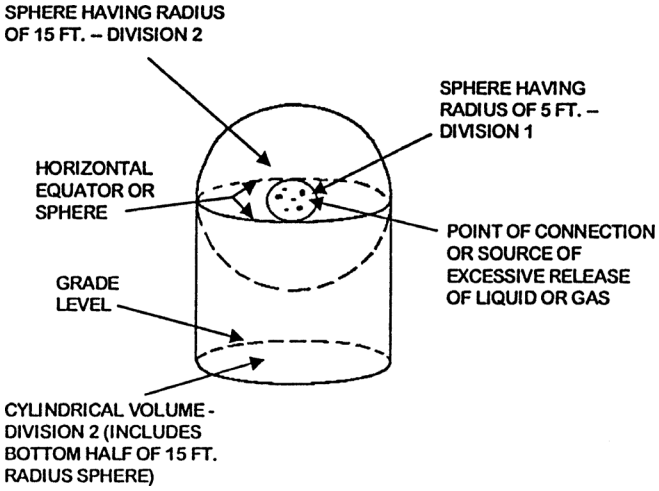

[Statutory Authority: RCW 49.17.040. WSR 98-24-096, § 296-307-41047, filed 12/1/98, effective 3/1/99. WSR 97-09-013, recodified as § 296-307-41047, filed 4/7/97, effective 4/7/97. Statutory Authority: RCW 49.17.040, [49.17.]050 and [49.17.]060. WSR 96-22-048, § 296-306A-41047, filed 10/31/96, effective 12/1/96.]

WAC 296-307-41049 What requirements apply to liquid-level gauging devices? (1) Each container manufactured after December 31, 1965, and filled on a volumetric basis must have a fixed liquid-level gauge to indicate the maximum permitted filling level according to subsection (5) of this section. Each container manufactured after December 31, 1969, must have permanently attached to the container adjacent to the fixed level gauge a marking showing the percentage full that will be shown by that gauge. When used with a variable liquid-level gauge, the fixed liquid-level gauge will act as a check on the variable gauge. Gauges must be used in charging containers as required in WAC 296-307-41034.

(2) All variable gauging devices must be arranged so that the maximum liquid level for butane, for a 50/50 mixture of butane and propane, and for propane, to which the container may be charged, is easily determined. Liquid levels from empty to full must be marked on the system nameplate or gauging device. Dials of magnetic or rotary gauges must show whether they are for cylindrical or spherical containers and whether for aboveground or underground service. The dials of gauges for aboveground containers of over 1,200 gallons water capacity must be so marked.

(3) Gauging devices that require bleeding of the product to the atmosphere, such as the rotary tube, fixed tube, and slip tube, shall be designed so that the bleed valve maximum opening is not larger than a No. 54 drill size, unless provided with excess flow valve.

(4) Gauging devices must have a design working pressure of at least 250 psig.

(5) Length of tube or position of fixed liquid-level gauge must be designed to indicate the maximum level to which the container may be filled for the product contained. This level shall be based on the volume of the product at 40°F at its maximum permitted filling density for aboveground containers and at 50°F for underground containers. You must calculate the filling point for which the fixed liquid level gauge must be designed according to this section.

Note: It is impossible to set out in a table the length of a fixed dip tube for various tank capacities because of the various tank diameters and lengths, and because the tank may be installed either vertically or horizontally. If you know the maximum permitted filling volume in gallons, however, you can determine the length of the fixed tube by using a strapping table from the container manufacturer.

The fixed tube should be long enough so that when its lower end touches the surface of the liquid in the container, the contents of the container will be the maximum permitted volume as determined by the following formula:

$$\frac{\text{Water capacity of container}^{1}\text{ (gals.) X filling density}^{2}}{\text{Specific gravity of LP-gas}^{1}\text{ x volume correction factor}^{3}\text{ x 100}} = \text{Maximum volume of LP-gas}$$

1 Measure at 60°F.

2 From WAC 296-307-41037(1).

3 For aboveground containers the liquid temperature is assumed to be 40°F and for underground containers the liquid temperature is assumed to be 50°F. To correct the liquid volumes at these temperatures to 60°F, use the following factors:

(a) To determine maximum volume of LP-gas for which a fixed length of dip tube must be set:

TABLE U-6
VOLUME CORRECTION FACTORS

Specific gravity	Aboveground	Underground
0.500	1.033	1.017
.510	1.031	1.016
.520	1.029	1.015
.530	1.028	1.014

Specific gravity	Aboveground	Underground
.540	1.026	1.013
.550	1.025	1.013
.560	1.024	1.012
.570	1.023	1.011
.580	1.021	1.011
.590	1.020	1.010

(b) To calculate the maximum volume of LP-gas that can be placed in a container when determining the length of the dip tube expressed as a percentage of total water content of the container, use the formula in (c) of this subsection.

(c) Determine the maximum weight of LP-gas that may be placed in a container for determining the length of a fixed dip tube by multiplying the maximum volume of LP-gas from Table U-6 by the pounds of LP-gas in a gallon at 40°F for aboveground and at 50°F for underground containers. Typical pounds per gallon are specified below:

Example: Assume a one hundred gallon total water capacity tank for aboveground storage of propane having a specific gravity of 0.510 of 60°F.

$$\frac{\text{100 (gals.) x 42 (filling density)}}{\text{0.510 x 1.031 (correction factor from Table U-6) x 100}} = \frac{4200}{52.6}$$

$$\frac{4200}{52.6} =$$ 79.8 gallons propane, the maximum amount permitted to be placed in a 100-gallon total water capacity above ground container equipped with a fixed dip tube.

$$\frac{\text{Maximum volume of LP-gas (from formula in (a) of this subsection) x 100}}{\text{Total water content of container in gallons}} = \text{Maximum percent of LP-gas}$$

	Aboveground, pounds per gallon	Underground, pounds per gallon
Propane	4.37	4.31
N Butane	4.97	4.92

(6) Fixed liquid-level gauges used on non-DOT containers must be stamped on the exterior of the gauge with the letters DT followed by the vertical distance (expressed in inches and carried out to one decimal place) from the top of container to the end of the dip tube or to the centerline of the gauge when located at the maximum permitted filling level. For portable containers that may be filled in the horizontal and/or vertical position the letters DT must be followed by V with the vertical distance from the top of the container to the end of the dip tube for vertical filling, and with H followed by the proper distance for horizontal filling. For DOT containers the stamping must be placed both on the exterior of the gauge and on the container. On aboveground or cargo containers where the gauges are positioned at specific levels, the marking may be specified in percent of total tank contents and the marking must be stamped on the container.

(7) Columnar gauge glasses must be restricted to charging plants where the fuel is withdrawn in the liquid phase only. They must have valves with metallic handwheels, excess flow valves, and extra-heavy glass adequately protected with a metal housing applied by the gauge manufacturer. They must be shielded against the direct rays of the sun. Columnar gauge glasses are prohibited on tank trucks, motor fuel tanks, and containers used in domestic, commercial, and industrial installations.

(8) Float gauging devices or equivalent that do not require flow for their operation and that have connections extending outside the container do not have to have excess flow valves if the piping and fittings are adequately designed to withstand the container pressure and are properly protected against physical damage and breakage.

[Statutory Authority: RCW 49.17.040. WSR 98-24-096, § 296-307-41049, filed 12/1/98, effective 3/1/99. WSR 97-09-013, recodified as § 296-307-41049, filed 4/7/97, effective 4/7/97. Statutory Authority: RCW 49.17.040, [49.17.]050 and [49.17.]060. WSR 96-22-048, § 296-306A-41049, filed 10/31/96, effective 12/1/96.]

WAC 296-307-41051 What requirements apply to appliances? (1) New commercial and industrial gas consuming appliances must be approved.

Exception: Any appliance that was originally manufactured for operation with a gaseous fuel other than LP-gas and is in good condition may be used with LP-gas only after it is properly converted, adapted, and tested for performance with LP-gas before the appliance is placed in use.

(2) Unattended heaters used inside buildings for the purpose of animal or poultry production or care must have an approved automatic device designed to shut off the flow of gas to the main burners, and pilot if used, in case the flame goes out.

(3) All commercial, industrial, and agricultural appliances or equipment must be installed according to the requirements of these standards and according to the following:

(a) Domestic and commercial appliances, NFPA 54-1969, Standard for the Installation of Gas Appliances and Gas Piping.

(b) Industrial appliances, NFPA 54A-1969, Standard for the Installation of Gas Piping and Gas Equipment on Industrial Premises and Certain Other Premises.

(c) Standard for the Installation and Use of Stationary Combustion Engines and Gas Turbines, NFPA 37-1970.

(d) Standard for the Installation of Equipment for the Removal of Smoke and Grease-Laden Vapors from Commercial Cooking Equipment, NFPA 96-1970.

[WSR 97-09-013, recodified as § 296-307-41051, filed 4/7/97, effective 4/7/97. Statutory Authority: RCW 49.17.040, [49.17.]050 and [49.17.]060. WSR 96-22-048, § 296-306A-41051, filed 10/31/96, effective 12/1/96.]

WAC 296-307-415 Cylinder systems.

[WSR 97-09-013, recodified as § 296-307-415, filed 4/7/97, effective 4/7/97. Statutory Authority: RCW 49.17.040, [49.17.]050 and [49.17.]060. WSR 96-22-048, § 296-306A-415, filed 10/31/96, effective 12/1/96.]

WAC 296-307-41501 What does this section cover? WAC 296-307-415 applies to systems using DOT containers. Cylinder systems must meet all requirements of WAC 296-307-410 (unless otherwise indicated) and the additional requirements of this section.

[Statutory Authority: RCW 49.17.040. WSR 98-24-096, § 296-307-41501, filed 12/1/98, effective 3/1/99. WSR 97-09-013, recodified as § 296-307-41501, filed 4/7/97, effective 4/7/97. Statutory Authority: RCW 49.17.040,

[49.17.]050 and [49.17.]060. WSR 96-22-048, § 296-306A-41501, filed 10/31/96, effective 12/1/96.]

WAC 296-307-41503 What is a "cylinder system"? A "cylinder system" includes the container base or bracket, containers, container valves, connectors, manifold valve assembly, regulators, and relief valves.

[WSR 97-09-013, recodified as § 296-307-41503, filed 4/7/97, effective 4/7/97. Statutory Authority: RCW 49.17.040, [49.17.]050 and [49.17.]060. WSR 96-22-048, § 296-306A-41503, filed 10/31/96, effective 12/1/96.]

WAC 296-307-41505 How must containers be marked for cylinder systems? (1) Containers must be marked according to DOT regulations. Additional markings that do not conflict with DOT regulations may be used.

(2) Each container must be marked with its water capacity in pounds or other identified unit of weight.

(3) Exception: If you are the only one who fills and maintains the container and if the water capacity of the container is identified by a code, subsection (2) of this section does not apply.

(4) Each container must be marked with its tare weight in pounds or other identified unit of weight including all permanently attached fittings but not the cap.

[WSR 97-09-013, recodified as § 296-307-41505, filed 4/7/97, effective 4/7/97. Statutory Authority: RCW 49.17.040, [49.17.]050 and [49.17.]060. WSR 96-22-048, § 296-306A-41505, filed 10/31/96, effective 12/1/96.]

WAC 296-307-41507 What additional requirements apply to cylinder systems installed outdoors? (1) Containers must not be buried below ground. However, systems may be installed in a compartment or recess below grade level, such as a niche in a slope or terrace wall that is used for no other purpose, if the container and regulating equipment are not in contact with the ground, and the compartment or recess is drained and ventilated horizontally to the outside air from its lowest level, with the outlet at least three feet away from any building opening below the level of the outlet.

(2) Except as provided in WAC 296-307-41025(14), the discharge from safety-relief devices must be located at least three feet away from any building opening that is below the level of discharge and must not terminate beneath any building unless the space is well ventilated to the outside and is not enclosed on more than two sides.

(3) Containers must be set on firm foundation or otherwise firmly secured; the possible effect of settling on the outlet piping must be guarded against by a flexible connection or special fitting.

[Statutory Authority: RCW 49.17.040. WSR 98-24-096, § 296-307-41507, filed 12/1/98, effective 3/1/99. WSR 97-09-013, recodified as § 296-307-41507, filed 4/7/97, effective 4/7/97. Statutory Authority: RCW 49.17.040, [49.17.]050 and [49.17.]060. WSR 96-22-048, § 296-306A-41507, filed 10/31/96, effective 12/1/96.]

WAC 296-307-41509 What additional requirements apply to cylinder system installed indoors? (1) When portable containers are necessary and it is not practical to use them outdoors, containers and equipment may be used indoors only if they meet the requirements of this section.

(a) "Containers in use" means connected for use.

(b) Systems using containers with a water capacity greater than 2-1/2 pounds (nominal one pound LP-gas capacity) must have excess flow valves. Such excess flow valves must be either integral with the container valves or in the connections to the container valve outlets. In either case, an excess flow valve must be installed so that any strain beyond the excess flow valve will not cause breakage between the container and the excess flow valve. The installation of excess flow valves must take into account the type of valve protection provided.

(c) Regulators must be either directly connected to the container valves or to manifolds connected to the container valves. The regulator must be suitable for use with LP-gas. Manifolds and fittings connecting containers to pressure regulator inlets must be designed for at least 250 psig service pressure.

(d) Valves on containers having a water capacity greater than fifty pounds (nominal twenty pounds LP-gas capacity) must be protected while in use.

(e) Aluminum pipe or tubing is prohibited.

(f) Hose must be designed for a working pressure of at least 250 psig. Hose and hose connections shall be listed by a nationally recognized testing laboratory.

(i) Hose must be as short as practical.

(ii) Hose must be long enough to allow required spacing without kinking, straining, or allowing hose to be close enough to a burner to be damaged by heat.

(g) Portable heaters, including salamanders, must have an approved automatic device to shut off the flow of gas to the main burner, and pilot if used, in case the flame goes out. Heaters with inputs above 50,000 Btu manufactured on or after May 17, 1967, and heaters with inputs above 100,000 Btu manufactured before May 17, 1967, must have either:

(i) A pilot that must be lighted and proved before the main burner can be turned on; or

(ii) An electric ignition system;

(iii) Container valves, connectors, regulators, manifolds, piping, and tubing must not be used as structural supports for heaters.

Exception: These requirements do not apply to tar kettle burners, torches, melting pots, nor do they apply to portable heaters under 7,500 Btuh input when used with containers with a maximum water capacity of 2-1/2 pounds.

(h) Containers, regulating equipment, manifolds, piping, tubing, and hose must be located to minimize exposure to abnormally high temperatures (such as may result from exposure to convection or radiation from heating equipment or installation in confined spaces), physical damage, or tampering.

(i) Heat producing equipment must be located and used to minimize the possibility of igniting combustibles.

(j) Containers with water capacity greater than 2-1/2 pounds (nominal one pound LP-gas capacity) connected for use, must stand on a firm and substantially level surface and, when necessary, must be secured in an upright position.

(k) Containers, including the valve protective devices, must be installed to minimize the probability of impingement of discharge of safety-relief devices upon containers.

(2) Containers with a maximum water capacity of 2-1/2 pounds (nominal one pound LP-gas capacity) may be used indoors as part of approved self-contained hand torch assemblies or similar appliances.

(3) When buildings frequented by the public are open to the public, containers may be used for repair or minor renovation as follows:

(a) The maximum water capacity of individual containers must be 50 pounds (nominal twenty pounds LP-gas capacity).

(b) The number of LP-gas containers must not exceed the number of employees assigned to use LP-gas.

(c) Containers with a water capacity greater than 2-1/2 pounds (nominal one pound LP-gas capacity) must be attended at all times.

(4) When buildings frequented by the public are closed to the public, containers may be used in buildings or structures for repairs or minor renovation as follows:

(a) The maximum water capacity of individual containers must be 245 pounds (nominal one hundred pounds LP-gas capacity).

(b) For temporary heating such as curing concrete, drying plaster and similar applications, heaters (other than integral heater-container units) must be located at least six feet from any LP-gas container. You may use heaters specifically designed for attachment to the container or to a supporting standard, if they are designed and installed to prevent direct or radiant heat application from the heater onto the container. Blower and radiant type heater must not be directed toward any LP-gas container within 20 feet.

(c) If two or more heater-container units are located in an unpartitioned area on the same floor, the container or containers of each unit must be separated from the container or containers of any other unit by at least 20 feet.

(d) When heaters are connected to containers for use in an unpartitioned area on the same floor, the total water capacity of containers manifolded together for connection to a heater or heaters shall not be greater than 735 pounds (nominal three hundred pounds LP-gas capacity). Such manifolds must be separated by at least 20 feet.

(e) On floors on which heaters are not connected for use, containers may be manifolded together for connection to a heater or heaters on another floor, if:

(i) The total water capacity of containers connected to any one manifold is a maximum of 2,450 pounds (nominal one thousand pounds LP-gas capacity) and;

(ii) Where more than one manifold having a total water capacity greater than 735 pounds (nominal three hundred pounds LP-gas capacity) are located in the same unpartitioned area, they shall be separated by at least 50 feet.

(f) Containers with a water capacity greater than 2-1/2 pounds (nominal one pound LP-gas capacity) must be attended at all times.

(5) Containers may be used in industrial occupancies for processing, research, or experimental purposes as follows:

(a) The maximum water capacity of individual containers must be 245 pounds (nominal one hundred pounds LP-gas capacity).

(b) Containers connected to a manifold must have a total water capacity of a maximum of 735 pounds (nominal three hundred pounds LP-gas capacity) and only one manifold may be located in the same room unless separated at least 20 feet from a similar unit.

(c) LP-gas in containers for research and experimental use must use the smallest practical quantity.

(6) Containers used in industrial occupancies with essentially noncombustible contents where portable equipment for space heating is essential and where a permanent heating installation is not practical, must meet the requirements of subsection (5) of this section.

(7) Containers may be used in buildings for temporary emergency heating purposes, if necessary to prevent damage to the buildings or contents, when the permanent heating system is temporarily out of service, as follows:

(a) Containers and heaters must meet the requirements of subsection (5) of this section.

(b) The temporary heating equipment must be attended at all times.

(8) Containers may be used temporarily in buildings for training purposes related in installation and use of LP-gas systems, as follows:

(a) The maximum water capacity of individual containers must be 245 pounds (nominal one hundred pounds LP-gas capacity), but the maximum quantity of LP-gas that may be placed in each container is 20 pounds.

(b) If more than one container is located in the same room, the containers must be separated by at least 20 feet.

(c) Containers must be removed from the building when the training class has terminated.

[WSR 97-09-013, recodified as § 296-307-41509, filed 4/7/97, effective 4/7/97. Statutory Authority: RCW 49.17.040, [49.17.]050 and [49.17.]060. WSR 96-22-048, § 296-306A-41509, filed 10/31/96, effective 12/1/96.]

WAC 296-307-41511 What requirements apply to valves and accessories? (1) Valves in the assembly of multiple container systems must be arranged so that containers can be replaced without shutting off the flow of gas in the system.

Note: An automatic changeover device is not required.

(2) Regulators and low-pressure relief devices must be rigidly attached to the cylinder valves, cylinders, supporting standards, the building walls or otherwise rigidly secured and must be installed or protected so that weather will not affect their operation.

(3) Valves and connections to the containers must be protected while in transit, in storage, and while being moved into final use, as follows:

(a) By setting into the recess of the container to prevent the possibility of being struck if the container is dropped on a flat surface; or

(b) By ventilated cap or collar, fastened to the container capable of withstanding a blow from any direction equivalent to that of a 30-pound weight dropped four feet. Construction must ensure that a blow will not be transmitted to the valve or other connection.

(4) When containers are not connected to the system, the outlet valves must be kept tightly closed or plugged, even on empty containers.

(5) Containers having a water capacity in excess of 50 pounds (approximately 21 pounds LP-gas capacity), recharged at the installation, must have excess flow or backflow check valves to prevent the discharge of container contents in case of failure of the filling or equalizing connection.

[WSR 97-09-013, recodified as § 296-307-41511, filed 4/7/97, effective 4/7/97. Statutory Authority: RCW 49.17.040, [49.17.]050 and [49.17.]060. WSR 96-22-048, § 296-306A-41511, filed 10/31/96, effective 12/1/96.]

WAC 296-307-41513 What requirements apply to safety devices for cylinder systems? (1) Containers must have safety devices as required by DOT regulations.

(2) A final stage regulator of an LP-gas system (excluding any appliance regulator) must have, on the low-pressure side, a relief valve that is set to start to discharge within the limits specified in Table U-7.

TABLE U-7

	Relief valve start-to-discharge pressure setting (percent of regulator delivery pressure)	
Regulator delivery pressure	**Minimum**	**Maximum**
1 psig or less	200	300
Above 1 psig but not over 3 psig	140	200
Above 3 psig	125	200

(3) When a regulator or pressure relief valve is used indoors for other than purposes specified in WAC 296-307-41017(1), the relief valve and the space above the regulator and relief valve diaphragms shall be vented to the outside air with the discharge outlet located at least three feet horizontally away from any building opening that is below such discharge.

Exception: This requirement does not apply to individual appliance regulators when protection is otherwise provided, nor to WAC 296-307-41509 and 296-307-41025(14). In buildings devoted exclusively to gas distribution, the space above the diaphragm need not be vented to the outside.

[Statutory Authority: RCW 49.17.040. WSR 98-24-096, § 296-307-41513, filed 12/1/98, effective 3/1/99. WSR 97-09-013, recodified as § 296-307-41513, filed 4/7/97, effective 4/7/97. Statutory Authority: RCW 49.17.040, [49.17.]050 and [49.17.]060. WSR 96-22-048, § 296-306A-41513, filed 10/31/96, effective 12/1/96.]

WAC 296-307-41515 What other requirements apply to cylinder systems? (1) Containers must not be reinstalled unless they are requalified according to DOT regulations.

(2) A product must not be placed in a container marked with a service pressure less than four-fifths of the maximum vapor pressure of product at 130°F.

[WSR 97-09-013, recodified as § 296-307-41515, filed 4/7/97, effective 4/7/97. Statutory Authority: RCW 49.17.040, [49.17.]050 and [49.17.]060. WSR 96-22-048, § 296-306A-41515, filed 10/31/96, effective 12/1/96.]

WAC 296-307-420 Systems using non-DOT containers.

[WSR 97-09-013, recodified as § 296-307-420, filed 4/7/97, effective 4/7/97. Statutory Authority: RCW 49.17.040, [49.17.]050 and [49.17.]060. WSR 96-22-048, § 296-306A-420, filed 10/31/96, effective 12/1/96.]

WAC 296-307-42001 What does this section cover? WAC 296-307-420 applies to systems using storage containers not constructed according to DOT specifications. Non-DOT containers must meet all requirements of WAC 296-307-410 (unless otherwise indicated) and the additional requirements of this section.

[Statutory Authority: RCW 49.17.040. WSR 98-24-096, § 296-307-42001, filed 12/1/98, effective 3/1/99. WSR 97-09-013, recodified as § 296-307-42001, filed 4/7/97, effective 4/7/97. Statutory Authority: RCW 49.17.040, [49.17.]050 and [49.17.]060. WSR 96-22-048, § 296-306A-42001, filed 10/31/96, effective 12/1/96.]

WAC 296-307-42003 How must non-DOT containers be designed and classified? Storage containers must be designed and classified according to Table U-8.

TABLE U-8

			Minimum design pressures of container lb. per sp. in. gauge
Container type	**For gases with vapor press. Not to exceed lb. per sp. in. gauge 100°F (37.8°C.)**	**1949 and earlier editions of ASME Code (Par. U-68, U-69)**	**1949 edition of Code (Par. U-200, U-201); 1950, 1952, 1956, 1959, 1962, 1965, and 968 (Division I) editions of ASME Code; All editions of API-ASME Code[3]**
80[1]	80[1]	80[1]	100[1]
100	100	100	125
125	125	125	156
150	150	150	187
175	175	175	219
200[2]	215	200	250

1 New type 80 storage containers have not been authorized since Dec. 31, 1947.

2 Container type may be increased by increments of 25. The minimum design pressure of containers shall be 100% of the container type designations when constructed under 1949 or earlier editions of the ASME Code (Par. U-68 and U-69). The minimum design pressure of containers shall be 125% of the container type designation when constructed under:

1. The 1949 ASME Code (Par. U-200 and U-201);
2. 1950, 1952, 1956, 1959, 1962, 1965, and 1968 (Division I) editions of the ASME Code; and
3. All editions of the API-ASME Code.

3 Construction of containers under the API-ASME Code is prohibited after July 1, 1961.

[WSR 97-09-013, recodified as § 296-307-42003, filed 4/7/97, effective 4/7/97. Statutory Authority: RCW 49.17.040, [49.17.]050 and [49.17.]060. WSR 96-22-048, § 296-306A-42003, filed 10/31/96, effective 12/1/96.]

WAC 296-307-42005 What requirements apply to valves and accessories, filler pipes, and discharge pipes for non-DOT containers? (1) The filling pipe inlet terminal must not be located inside a building. For containers with a water capacity of 125 gallons or more, such terminals must be located at least 10 feet from any building, and preferably at least 5 feet from any driveway, and must have a protective housing.

(2) The filling connection must be fitted with one of the following:

(a) Combination back-pressure check valve and excess flow valve.

(b) One double or two single back-pressure check valves.

(c) A positive shut-off valve in conjunction with either:

(i) An internal back pressure valve; or

(ii) An internal excess flow valve.

(3) All openings in a container must have approved automatic excess flow valves unless otherwise exempt.

(4) An excess flow valve is not required in the withdrawal service line if the following requirements are met:

(a) The total water capacity is a maximum of 2,000 U.S. gallons.

(b) The discharge from the service outlet is controlled by a manually operated shut-off valve that is:

(i) Threaded directly into the service outlet of the container; or

(ii) Is an integral part of a substantial fitting threaded into or on the service outlet of the container; or

(iii) Threaded directly into a substantial fitting threaded into or on the service outlet of the container.

(c) The shut-off valve is equipped with an attached handwheel or the equivalent.

(d) The controlling orifice between the contents of the container and the outlet of the shut-off valve is a maximum of 5/16 inch in diameter for vapor withdrawal systems and 1/8 inch in diameter for liquid withdrawal systems.

(e) An approved pressure-reducing regulator is directly attached to the outlet of the shut-off valve and is rigidly supported, or an approved pressure-reducing regulator is attached to the outlet of the shut-off valve by means of a suitable flexible connection, if the regulator is adequately supported and properly protected on or at the tank.

(5) All inlet and outlet connections except safety-relief valves, liquid-level gauging devices and pressure gauges on containers of 2,000 gallons water capacity, or more, and on any container used to supply fuel directly to an internal combustion engine, must be labeled to designate whether they communicate with vapor or liquid space. Labels may be on valves.

(6) Instead of an excess flow valve, openings may be fitted with a quick-closing internal valve that must remain closed when not in operation. The internal mechanism for such valves may have a secondary control that must have a fusible plug (not over 220°F melting point) that will cause the internal valve to close automatically in case of fire.

(7) A maximum of two plugged openings may be used on a container of 2,000 gallons or less water capacity.

(8) Containers of 125 gallons water capacity or more manufactured after July 1, 1961, must have an approved device for liquid evacuation, the size of which must be 3/4 inch national pipe thread minimum. A plugged opening does not satisfy this requirement.

[WSR 97-09-013, recodified as § 296-307-42005, filed 4/7/97, effective 4/7/97. Statutory Authority: RCW 49.17.040, [49.17.]050 and [49.17.]060. WSR 96-22-048, § 296-306A-42005, filed 10/31/96, effective 12/1/96.]

WAC 296-307-42007 What additional requirements apply to safety devices for non-DOT containers? (1) All safety devices must comply with the following:

(a) All container safety-relief devices must be located on the containers.

(b) In industrial and gas manufacturing plants, discharge pipe from safety-relief valves on pipe lines within a building must discharge upward and be piped to a point outside a building.

(c) Safety-relief device discharge terminals must be located to provide protection against physical damage and must be fitted with loose raincaps. Return bends and restrictive pipefittings are prohibited.

(d) If desired, discharge lines from two or more safety-relief devices located on the same unit, or similar lines from two or more different units, may be run into a common discharge header, if the cross-sectional area of the header is at least equal to the sum of the cross-sectional area of the individual discharge lines, and the setting of safety-relief valves are the same.

(e) Each storage container of over 2,000 gallons water capacity must have a suitable pressure gauge.

(f) A final stage regulator of an LP-gas system (excluding any appliance regulator) must have, on the low-pressure side, a relief valve that is set to start to discharge within the limits specified in Table U-7.

(g) When a regulator or pressure relief valve is installed indoors, the relief valve and the space above the regulator and relief valve diaphragms must be vented to the outside air with the discharge outlet located not less than 3 feet horizontally away from any opening into the building that is below such discharge.

Exception: This requirement does not apply to individual appliance regulators already protected. In buildings devoted exclusively to gas distribution, the space above the diaphragm need not be vented to the outside.

(2) Safety devices for aboveground containers must be provided as follows:

(a) Containers of 1,200 gallons water capacity or less that may contain liquid fuel when installed aboveground must have the rate of discharge required by WAC 296-307-41025(2) provided by a spring-loaded relief valve or valves. In addition to the required spring-loaded relief valve, a suitable fuse plug may be used if the total discharge area of the fuse plug for each container does not exceed 0.25 square inch.

(b) The fusible metal of the fuse plugs must have a yield temperature of 208°F minimum and 220°F maximum. Relief valves and fuse plugs must have direct communication with the vapor space of the container.

(c) On a container having a water capacity between 125 and 2,000 gallons, the discharge from the safety-relief valves must be vented away from the container upwards and unobstructed to the open air so that it prevents any impingement of escaping gas upon the container; loose-fitting rain caps shall be used. Suitable provision must be made for draining condensate that may accumulate in the relief valve or its discharge pipe.

(d) On containers of 125 gallons water capacity or less, the discharge from safety-relief devices must be located at least 5 feet horizontally away from any opening into the building below the level of such discharge.

(e) On a container having a water capacity greater than 2,000 gallons, the discharge from the safety-relief valves must be vented away from the container upwards to a point at least 7 feet above the container, and unobstructed to the open air so that it prevents any impingement of escaping gas upon the container; loose-fitting rain caps shall be used. Suitable provision must be made so that any liquid or condensate that may accumulate inside of the safety-relief valve or its discharge pipe will not render the valve inoperative. If a drain is used, the container, adjacent containers, piping, or equipment must be protected against impingement of flame resulting from ignition of product escaping from the drain.

(3) On all containers that are installed underground and that contain no liquid fuel until buried and covered, the rate of

discharge of the spring-loaded relief valve installed thereon may be reduced to a minimum of 30% of the rate of discharge specified in WAC 296-307-41025(2). Containers so protected must remain covered after installation until the liquid fuel has been removed. Containers that may contain liquid fuel before being installed underground and before being completely covered with earth are aboveground containers when determining the rate of discharge requirement of the relief valves.

(4) On underground containers of over 2,000 gallons water capacity, the discharge from safety-relief devices must be piped directly upward to a point at least 7 feet above the ground.

(5) Where the manhole or housing may become flooded, the discharge from regulator vent lines must be above the highest probable water level. All manholes or housings must have ventilated louvers or equivalent, and the area of openings must be equal to or exceed the combined discharge areas of the safety-relief valves and other vent lines that discharge their content into the manhole housing.

(6) Safety devices for vaporizers must be provided as follows:

(a) Vaporizers of less than 1 quart total capacity, heated by the ground or the surrounding air, need not have safety-relief valves if adequate tests demonstrate that the assembly is safe without safety-relief valves.

(b) Fusible plugs are prohibited on vaporizers.

(c) In industrial and gas manufacturing plants, safety-relief valves on vaporizers within a building must be piped to a point outside the building and be discharged upward.

[Statutory Authority: RCW 49.17.040. WSR 98-24-096, § 296-307-42007, filed 12/1/98, effective 3/1/99. WSR 97-09-013, recodified as § 296-307-42007, filed 4/7/97, effective 4/7/97. Statutory Authority: RCW 49.17.040, [49.17.]050 and [49.17.]060. WSR 96-22-048, § 296-306A-42007, filed 10/31/96, effective 12/1/96.]

WAC 296-307-42009 When may non-DOT containers be reinstalled? Containers may be reinstalled if they are free from harmful external corrosion or other damage. Where containers are reinstalled underground, the corrosion resistant coating must be put in good condition. Where containers are reinstalled aboveground, the safety devices and gauging devices must meet all requirements for aboveground containers.

[WSR 97-09-013, recodified as § 296-307-42009, filed 4/7/97, effective 4/7/97. Statutory Authority: RCW 49.17.040, [49.17.]050 and [49.17.]060. WSR 96-22-048, § 296-306A-42009, filed 10/31/96, effective 12/1/96.]

WAC 296-307-42011 What is the maximum capacity allowed for non-DOT containers? A non-DOT storage container must have a maximum 90,000 gallons water capacity.

[WSR 97-09-013, recodified as § 296-307-42011, filed 4/7/97, effective 4/7/97. Statutory Authority: RCW 49.17.040, [49.17.]050 and [49.17.]060. WSR 96-22-048, § 296-306A-42011, filed 10/31/96, effective 12/1/96.]

WAC 296-307-42013 How must non-DOT containers be installed? (1) Containers installed aboveground must have substantial masonry or noncombustible structural supports on firm masonry foundation, unless otherwise indicated.

(2) Aboveground containers must be supported as follows:

(a) Horizontal containers must be mounted on saddles that permit expansion and contraction. Structural metal supports may be used when they are protected against fire. Suitable means of preventing corrosion must be provided on that portion of the container in contact with the foundations or saddles.

(b) Containers of 2,000 gallons water capacity or less may be installed with nonfireproofed ferrous metal supports if mounted on concrete pads or footings, and if the distance from the outside bottom of the container shell to the concrete pad, footing, or the ground is a maximum of 24 inches.

(3) Any container may be installed with nonfireproofed ferrous metal supports if mounted on concrete pads or footings, and if the distance from the outside bottom of the container to the ground is a maximum of 5 feet, if the container is in an isolated location.

(4) Partially buried containers must meet the following requirements:

(a) The portion of the container below the surface and for a vertical distance not less than 3 inches above the surface of the ground is protected to resist corrosion, and the container is protected against settling and corrosion as required for fully buried containers.

(b) Partially buried containers must meet the same spacing requirements as underground tanks.

(c) Relief valve capacity must be the same as for aboveground containers.

(d) Container is protected against vehicular damage by location or other means.

(e) Partially buried containers must meet the same requirements for filling densities as for aboveground containers.

(5) Containers buried underground must be placed so that the top of the container is at least 6 inches below grade. Underground containers subject to abrasive action or physical damage must be:

(a) Placed not less than 2 feet below grade; or

(b) Otherwise protected against such physical damage.

It is not necessary to cover the portion of the container to which manhole and other connections are affixed. When necessary to prevent floating, containers must be securely anchored or weighted.

(6) Containers must be given a protective coating before being placed underground. This coating must be equivalent to hot-dip galvanizing or to two coatings of red lead followed by a heavy coating of coal tar or asphalt. In lowering the container into place, take care to prevent damage to the coating. Any damage to the coating must be repaired before backfilling.

Containers must be set on a firm foundation (firm earth may be used) and surrounded with earth or sand firmly tamped in place. Backfill should be free of rocks or other abrasive materials.

(7) Containers with foundations attached (portable or semiportable containers with suitable steel runners or skids popularly known as "skid tanks") must meet the requirements of WAC 296-307-410 and the following:

(a) If they are to be used at a given general location for a temporary period of 6 months at most, they may be without

fire-resisting foundations or saddles but must have adequate ferrous metal supports.

(b) They must not be located with the outside bottom of the container shell more than 5 feet above the surface of the ground unless fire-resisting supports are provided.

(c) The bottom of the skids must be between 2 and 12 inches below the outside bottom of the container shell.

(d) Flanges, nozzles, valves, fittings, and the like, having communication with the interior of the container, must be protected against physical damage.

(e) When not permanently located on fire-resisting foundations, piping connections must be flexible enough to minimize breakage or leakage of connections if the container settles, moves, or is otherwise displaced.

(f) Skids, or lugs for attachment of skids, must be secured to the container according to the rules under which the container is designed and built (with a minimum factor of safety of four) to withstand loading in any direction equal to four times the weight of the container and attachments when filled to the maximum permissible loaded weight.

(8) Field welding where necessary must be made only on saddle plates or brackets that were applied by the manufacturer of the tank.

(9) For aboveground containers, secure anchorage or adequate pier height must be provided against possible container flotation wherever high floodwater might occur.

(10) When permanently installed containers are interconnected, you must allow for expansion, contraction, vibration, and settling of containers, and interconnecting piping. Where flexible connections are used, they must be approved and designed for a bursting pressure of at least five times the vapor pressure of the product at 100°F. Nonmetallic hose is prohibited for permanently interconnecting containers.

(11) Container assemblies listed for interchangeable installation aboveground or underground must meet the requirements for aboveground installations for safety-relief capacity and filling density. For installation aboveground all other requirements for aboveground installations apply. For installation underground all other requirements for underground installations apply.

[Statutory Authority: RCW 49.17.040. WSR 98-24-096, § 296-307-42013, filed 12/1/98, effective 3/1/99. WSR 97-09-013, recodified as § 296-307-42013, filed 4/7/97, effective 4/7/97. Statutory Authority: RCW 49.17.040, [49.17.]050 and [49.17.]060. WSR 96-22-048, § 296-306A-42013, filed 10/31/96, effective 12/1/96.]

WAC 296-307-42015 How must non-DOT containers be protected? (1) Valves, regulating, gauging, and other container accessory equipment must be protected against tampering and physical damage. Such accessories must also be protected during the transit of containers intended for installation underground.

(2) On underground or combination aboveground-underground containers, the service valve handwheel, the terminal for connecting the hose, and the opening through which there can be a flow from safety-relief valves must be at least 4 inches above the container and this opening must be located in the dome or housing. Underground systems must be installed so that all openings, including the regulator vent, are located above the normal maximum water table.

(3) All connections to the underground containers must be located within a substantial dome, housing, or manhole, with access protected by a substantial cover.

[WSR 97-09-013, recodified as § 296-307-42015, filed 4/7/97, effective 4/7/97. Statutory Authority: RCW 49.17.040, [49.17.]050 and [49.17.]060. WSR 96-22-048, § 296-306A-42015, filed 10/31/96, effective 12/1/96.]

WAC 296-307-42017 What requirements apply to non-DOT containers in industrial plants? General provisions applicable to systems in industrial plants (of 2,000 gallons water capacity and more) and to bulk filling plants.

(1) When standard watch service is provided, it must be extended to the LP-gas installation and personnel shall be properly trained.

(2) If loading and unloading are normally done during the night, adequate lights must be provided to illuminate storage containers, control valves, and other equipment.

(3) Suitable roadways or means of access for extinguishing equipment such as wheeled extinguishers or fire department apparatus must be provided.

(4) To minimize trespassing or tampering, the area that includes container accessories, pumping equipment, loading and unloading facilities, and cylinder-filling facilities must be enclosed with at least a 6-foot-high industrial fence unless otherwise adequately protected. There must be at least two means of emergency access.

[WSR 97-09-013, recodified as § 296-307-42017, filed 4/7/97, effective 4/7/97. Statutory Authority: RCW 49.17.040, [49.17.]050 and [49.17.]060. WSR 96-22-048, § 296-306A-42017, filed 10/31/96, effective 12/1/96.]

WAC 296-307-42019 What requirements apply to container-charging plants? (1) The container-charging room must be located at least:

(a) Ten feet from bulk storage containers.

(b) Twenty-five feet from line of adjoining property that may be built on.

(2) Tank truck filling station outlets must be located at least:

(a) Twenty-five feet from line of adjoining property that may be built on.

(b) Ten feet from pumps and compressors if housed in one or more separate buildings.

(3) The pumps or compressors may be located in the container-charging room or building, in a separate building, or outside of buildings. When housed in separate building, such building (a small noncombustible weather cover is not to be construed as a building) must be located at least:

(a) Ten feet from bulk storage tanks.

(b) Twenty-five feet from line of adjoining property that may be built on.

(c) Twenty-five feet from sources of ignition.

(4) When a part of the container-charging building is to be used for a boiler room or where open flames or similar sources of ignition exist or are employed, the space to be occupied must be separated from container charging room by a partition wall or walls of fire-resistant construction continuous from floor to roof or ceiling. Such separation walls must be without openings and must be joined to the floor, other walls, and ceiling or roof to provide a permanent gas-tight joint.

[WSR 97-09-013, recodified as § 296-307-42019, filed 4/7/97, effective 4/7/97. Statutory Authority: RCW 49.17.040, [49.17.]050 and [49.17.]060. WSR 96-22-048, § 296-306A-42019, filed 10/31/96, effective 12/1/96.]

WAC 296-307-42021 What fire protection must be provided for non-DOT containers? (1) Each bulk plant must have at least one approved portable fire extinguisher with a minimum rating of 12-B, C.

(2) In industrial installations involving containers of 150,000 gallons aggregate water capacity or more, you must provide an adequate supply of water at the container site for fire protection in the container area, unless other adequate means for fire control are provided. Water hydrants must be readily accessible and spaced to provide water protection for all containers. Enough firehose must be provided to facilitate easy movement of the hose in the container area. You should equip the outlet of each hose line with a combination fog nozzle. A shelter must be provided to protect the hose and its conveyor from the weather.

[WSR 97-09-013, recodified as § 296-307-42021, filed 4/7/97, effective 4/7/97. Statutory Authority: RCW 49.17.040, [49.17.]050 and [49.17.]060. WSR 96-22-048, § 296-306A-42021, filed 10/31/96, effective 12/1/96.]

WAC 296-307-42023 What other requirements apply to non-DOT containers? (1) Aboveground containers must be kept properly painted.

(2) Vaporizers for internal combustion engines must meet the requirements of WAC 296-307-42515.

(3) Gas regulating and mixing equipment for internal combustion engines must meet the requirements of WAC 296-307-42517.

(4) Where vaporized gas on the low-pressure side of the system may condense to a liquid at normal operating temperatures and pressures, means must be provided to revaporize condensate.

(5) You must protect LP-gas systems against damage from vehicular traffic.

(6) Avoid the use of pits when possible, except pits fitted with automatic flammable vapor detecting devices. No drains or blowoff lines must be directed into or in proximity to sewer systems used for other purposes.

[Statutory Authority: RCW 49.17.040. WSR 98-24-096, § 296-307-42023, filed 12/1/98, effective 3/1/99. WSR 97-09-013, recodified as § 296-307-42023, filed 4/7/97, effective 4/7/97. Statutory Authority: RCW 49.17.040, [49.17.]050 and [49.17.]060. WSR 96-22-048, § 296-306A-42023, filed 10/31/96, effective 12/1/96.]

WAC 296-307-425 LP-gas as a motor fuel.

[WSR 97-09-013, recodified as § 296-307-425, filed 4/7/97, effective 4/7/97. Statutory Authority: RCW 49.17.040, [49.17.]050 and [49.17.]060. WSR 96-22-048, § 296-306A-425, filed 10/31/96, effective 12/1/96.]

WAC 296-307-42501 What does this section cover? (1) WAC 296-307-425 applies to internal combustion engines, fuel containers, and pertinent equipment for the use of LP-gases as a motor fuel on easily movable, readily portable units including self-propelled vehicles. This section does not apply to containers for transportation of LP-gases nor to marine fuel use.

(2) All uses of LP-gas as a motor fuel must meet all requirements of WAC 296-307-410 (unless otherwise indicated) and the additional requirements of this section.

[Statutory Authority: RCW 49.17.040. WSR 98-24-096, § 296-307-42501, filed 12/1/98, effective 3/1/99. WSR 97-09-013, recodified as § 296-307-42501, filed 4/7/97, effective 4/7/97. Statutory Authority: RCW 49.17.040, [49.17.]050 and [49.17.]060. WSR 96-22-048, § 296-306A-42501, filed 10/31/96, effective 12/1/96.]

WAC 296-307-42503 What general requirements apply to LP-gas used as a motor fuel? (1) Fuel may be used from the cargo tank of a truck while in transit, but not from cargo tanks on trailers or semitrailers. Fuel may be used from the cargo tanks to operate stationary engines if the wheels are securely blocked.

(2) Passenger-carrying vehicles must not be fueled while passengers are on board.

(3) Industrial trucks (including lift trucks) equipped with permanently mounted fuel containers must be charged outdoors. Charging equipment must meet the requirements of WAC 296-307-440.

(4) LP-gas fueled industrial trucks must comply with the Standard for Type Designations, Areas of Use, Maintenance and Operation of Powered Industrial Trucks, NFPA 505-1969.

(5) Engines on vehicles must be shut down while fueling if the fueling operation involves venting to the atmosphere.

[Statutory Authority: RCW 49.17.040. WSR 98-24-096, § 296-307-42503, filed 12/1/98, effective 3/1/99. WSR 97-09-013, recodified as § 296-307-42503, filed 4/7/97, effective 4/7/97. Statutory Authority: RCW 49.17.040, [49.17.]050 and [49.17.]060. WSR 96-22-048, § 296-306A-42503, filed 10/31/96, effective 12/1/96.]

WAC 296-307-42505 How must fuel containers be designed and classified? (1) Containers must meet the following requirements:

Minimum design pressure of container lb. per sp. in. gauge

Container type	For gases with vapor press. Not to exceed lb. per sp. in. gauge at 100°F (37.8°C.)	1949 and earlier editions of ASME Code (Par. U-68, U-69)	1949 edition of ASME Code (Par. U-200, U-201); editions 1950, 1952, 1956, 1959, 1962, 1965, and 1968 (Division I) editions of ASME Code; All editions of API-ASME Code[2]
200[1]	215	200	250

[1] Container type may be increased by increments of 25. The minimum design pressure of containers shall be 100% of the container type designation when constructed under 1949 or earlier editions of the ASME Code (Par. U-68 and U-69). The minimum design pressure of containers shall be 125% of the container type designation when constructed under:

1. The 1949 ASME Code (Par. U-200 and U-201);
2. 1950, 1952, 1956, 1959, 1962, 1965, and 1968 (Division I) editions of the ASME Code; and
3. All editions of the API-ASME Code.

[2] Construction of containers under the API-ASME Code is prohibited after July 1, 1961.

Exception: Fuel containers for use in industrial trucks (including lift trucks) shall be either DOT containers authorized for LP-gas service having a minimum service pressure of 240 psig or minimum Container Type 250. Under 1950 and later ASME Codes, this means a 312.5-psig design pressure container.

(2) DOT containers used as fuel containers must meet all requirements of this section.

(3) All container inlets and outlets except safety-relief valves and gauging devices must be labeled to designate whether they communicate with vapor or liquid space. (Labels may be on valves.)

[WSR 97-09-013, recodified as § 296-307-42505, filed 4/7/97, effective 4/7/97. Statutory Authority: RCW 49.17.040, [49.17.]050 and [49.17.]060. WSR 96-22-048, § 296-306A-42505, filed 10/31/96, effective 12/1/96.]

WAC 296-307-42507 How must fuel containers be installed? (1) Containers must be located to minimize the possibility of damage to the container. Containers located in the rear of trucks and buses, when protected by substantial bumpers meet this requirement. Fuel containers on passenger-carrying vehicles must be installed as far from the engine as is practical, and the passenger space and any space containing radio equipment must be sealed from the container space to prevent direct seepage of gas to these spaces. The container compartment must be vented to the outside. In case the fuel container is mounted near the engine or the exhaust system, the container must be shielded against direct heat radiation.

(2) Containers must be installed with as much clearance as practical and at least the minimum road clearance of the vehicle under maximum spring deflection. This minimum clearance must be to the bottom of the container or to the lowest fitting on the container or housing, whichever is lower.

(3) Permanent and removable fuel containers must be securely mounted to prevent jarring loose, slipping, or rotating, and the fastenings must be designed and constructed to withstand static loading in any direction equal to twice the weight of the tank and attachments when filled with fuel using a safety factor of at least four based on the ultimate strength of the material to be used. Field welding, when necessary, must be made only on saddle plates, lugs or brackets, attached to the container by the manufacturer.

(4) Fuel containers on buses must be permanently installed.

(5) Containers from which only vapor is to be withdrawn must be installed and equipped with suitable connections to minimize the accidental withdrawal of liquid.

[WSR 97-09-013, recodified as § 296-307-42507, filed 4/7/97, effective 4/7/97. Statutory Authority: RCW 49.17.040, [49.17.]050 and [49.17.]060. WSR 96-22-048, § 296-306A-42507, filed 10/31/96, effective 12/1/96.]

WAC 296-307-42509 What requirements apply to valves and accessories? (1) Container valves and accessories must have a rated working pressure of at least 250 psig, and must be suitable for LP-gas service.

(2) The filling connection must be fitted with an approved double back-pressure check valve, or a positive shutoff in conjunction with an internal back-pressure check valve. On a removable container the filler valve may be a hand operated shut-off valve with an internal excess flow valve. Main shut-off valves on the container on liquid and vapor must be readily accessible.

(3) Filling connections equipped with approved automatic back-pressure check valves, and safety-relief valves, all connections to the containers having openings for the flow of gas in excess of a No. 54 drill size must have approved automatic excess flow valves to prevent discharge of content in case connections are broken.

(4) Liquid-level gauging devices must meet the following requirements:

(a) Variable liquid-level gauges that require the venting of fuel to the atmosphere are prohibited on fuel containers of industrial trucks (including lift trucks).

(b) On portable containers that may be filled in the vertical and/or horizontal position, the fixed liquid-level gauge must indicate maximum permitted filling level for both vertical and horizontal filling with the container oriented to place the safety-relief valve in communication with the vapor space.

(c) For containers used solely in farm tractor service and charged at a point at least 50 feet from any important building, the fixed liquid-level gauging device may be constructed so that the outward flow of container content exceeds that passed by a No. 54 drill size opening, but must never exceed that passed by a No. 31 drill-size opening. An excess flow valve is not required. Fittings equipped with restricted drill size opening and the container on which they are used must be marked to indicate the size of the opening.

(d) All valves and connections on containers must be adequately protected to prevent damage due to accidental contact with stationary objects or from loose objects thrown up from the road. All valves must be safeguarded against damage due to collision, overturning or other accident. Farm tractors where parts of the vehicle provide protection to valves and fittings meet this requirement. However, on removable type containers the protection for the fittings must be permanently attached to the container.

(e) You should normally exchange removable fuel outdoors. When removable fuel containers are used, means shall be provided in the fuel system to minimize the escape of fuel when the containers are exchanged. You must use one of the following methods:

(i) Using an approved automatic quick-closing coupling (a type closing in both directions when uncoupled) in the fuel line; or

(ii) Closing the valve at the fuel container and allowing the engine to run until the fuel in the line is consumed.

[WSR 97-09-013, recodified as § 296-307-42509, filed 4/7/97, effective 4/7/97. Statutory Authority: RCW 49.17.040, [49.17.]050 and [49.17.]060. WSR 96-22-048, § 296-306A-42509, filed 10/31/96, effective 12/1/96.]

WAC 296-307-42511 What requirements apply to piping, tubing, and fittings? (1) Pipe from fuel container to first-stage regulator must be at least schedule 80 wrought iron or steel (black or galvanized), brass or copper; or seamless copper, brass, or steel tubing. Steel tubing must have a minimum wall thickness of 0.049 inch. Steel pipe or tubing must be adequately protected against exterior corrosion. Copper tubing must be types K or L or equivalent with a minimum wall thickness of 0.032 inch. Approved flexible connections may be used between container and regulator or between regulator and gas-air mixer. Using aluminum pipe or tubing is prohibited. For removable containers, an approved flexible connection must be used between the container and the fuel line.

(2) All piping must be installed, braced, and supported to minimize vibration strains or wear.

[WSR 97-09-013, recodified as § 296-307-42511, filed 4/7/97, effective 4/7/97. Statutory Authority: RCW 49.17.040, [49.17.]050 and [49.17.]060. WSR 96-22-048, § 296-306A-42511, filed 10/31/96, effective 12/1/96.]

WAC 296-307-42513 What requirements apply to safety devices? (1) Spring-loaded internal safety-relief valves must be used on all motor fuel containers.

(2) The discharge outlet from safety-relief valves must be located on the outside of enclosed spaces and as far as practical from possible sources of ignition, and vented upward within 45 degrees of the vertical to prevent impingement of escaping gas upon containers, or parts of vehicles, or on vehicles in adjacent lines of traffic. A rain cap or other protector must be used to keep water and dirt from collecting in the valve.

(3) When a discharge line from the container safety-relief valve is used, the line shall be metallic, other than aluminum, and must be sized, located, and maintained so as not to restrict the required flow of gas from the safety-relief valve. The discharge line must be able to withstand the pressure resulting from the discharge of vapor when the safety-relief valve is in the full open position. Flexible metal hose or tubing must be used when necessary.

(4) Portable containers equipped for volumetric filling may be filled in either the vertical or horizontal position only when oriented to place the safety-relief valve in communication with the vapor space.

[WSR 97-09-013, recodified as § 296-307-42513, filed 4/7/97, effective 4/7/97. Statutory Authority: RCW 49.17.040, [49.17.]050 and [49.17.]060. WSR 96-22-048, § 296-306A-42513, filed 10/31/96, effective 12/1/96.]

WAC 296-307-42515 What requirements apply to vaporizers? (1) Vaporizers, their parts, and other devices that may be subjected to container pressure must have a design pressure of at least 250 psig.

(2) Each vaporizer must have a valve or suitable plug that will permit substantially complete draining of the vaporizer. It must be located at or near the lowest portion of the section occupied by the water or other heating medium.

(3) Vaporizers must be securely fastened to minimize the possibility of loosening.

(4) Each vaporizer must be permanently marked at a visible point as follows:

(a) With the design pressure of the fuel-containing portion in psig.

(b) With the water capacity of the fuel-containing portion of the vaporizer in pounds.

(5) Devices to supply heat directly to a fuel container must have an automatic device to cut off the supply of heat before the pressure inside the fuel container reaches 80% of the start-to-discharge pressure setting of the safety-relief device on the fuel container.

(6) Engine exhaust gases may be used as a direct source of heat supply for the vaporization of fuel if the materials of construction of those parts of the vaporizer in contact with exhaust gases are resistant to the corrosive action of exhaust gases and the vaporizer system is designed to prevent excessive pressures.

(7) Fusible plugs are prohibited on vaporizers.

[WSR 97-09-013, recodified as § 296-307-42515, filed 4/7/97, effective 4/7/97. Statutory Authority: RCW 49.17.040, [49.17.]050 and [49.17.]060. WSR 96-22-048, § 296-306A-42515, filed 10/31/96, effective 12/1/96.]

WAC 296-307-42517 What requirements apply to gas regulating and mixing equipment? (1) Approved automatic pressure reducing equipment must be installed securely between the fuel supply container and gas-air mixer to reduce the pressure of the fuel delivered to the gas-air mixer.

(2) An approved automatic shut-off valve must be provided in the fuel system at some point ahead of the inlet of the gas-air mixer, designed to prevent flow of fuel to the mixer when the ignition is off and the engine is not running. For industrial trucks and engines operating in buildings other than those used exclusively to house engines, the automatic shut-off valve must be designed to operate if the engine stops. Atmospheric regulators (zero governors) are adequate as an automatic shut-off valve only in cases of outdoor operation such as farm tractors, construction equipment, irrigation pump engines, and other outdoor stationary engine installations.

(3) The source of air for combustion must be completely isolated from the passenger compartment, ventilating system, or air-conditioning system.

[WSR 97-09-013, recodified as § 296-307-42517, filed 4/7/97, effective 4/7/97. Statutory Authority: RCW 49.17.040, [49.17.]050 and [49.17.]060. WSR 96-22-048, § 296-306A-42517, filed 10/31/96, effective 12/1/96.]

WAC 296-307-42519 What is the maximum container capacity allowed? A single fuel container used on passenger carrying vehicles must have a maximum of 200 gallons water capacity. A single fuel container on other vehicles normally operating on the highway must have a maximum of 300 gallons water capacity except as provided in WAC 296-307-42503(1).

[Statutory Authority: RCW 49.17.040. WSR 98-24-096, § 296-307-42519, filed 12/1/98, effective 3/1/99. WSR 97-09-013, recodified as § 296-307-42519, filed 4/7/97, effective 4/7/97. Statutory Authority: RCW 49.17.040, [49.17.]050 and [49.17.]060. WSR 96-22-048, § 296-306A-42519, filed 10/31/96, effective 12/1/96.]

WAC 296-307-42521 What requirements apply to stationary engines used indoors? Stationary engines and gas turbines installed in buildings, including portable engines used instead of or to supplement stationary engines, must comply with the Standard for the Institution and Use of Stationary Combustion Engines and Gas Turbines, NFPA 37-1970, and the appropriate requirements of WAC 296-307-410 through 296-307-420.

[Statutory Authority: RCW 49.17.040. WSR 98-24-096, § 296-307-42521, filed 12/1/98, effective 3/1/99. WSR 97-09-013, recodified as § 296-307-42521, filed 4/7/97, effective 4/7/97. Statutory Authority: RCW 49.17.040, [49.17.]050 and [49.17.]060. WSR 96-22-048, § 296-306A-42521, filed 10/31/96, effective 12/1/96.]

WAC 296-307-42523 What requirements apply to portable engines used indoors? (1) Portable engines may be used in buildings only for emergency use, and according to WAC 296-307-42521.

(2) Exhaust gases must be discharged outside the building or to an area where they will not constitute a hazard.

(3) Provision must be made to supply sufficient air for combustion and cooling.

(4) An approved automatic shut-off valve must be provided in the fuel system ahead of the engine, designed to pre-

vent flow of fuel to the engine when the ignition is off or if the engine should stop.

[Statutory Authority: RCW 49.17.040. WSR 98-24-096, § 296-307-42523, filed 12/1/98, effective 3/1/99. WSR 97-09-013, recodified as § 296-307-42523, filed 4/7/97, effective 4/7/97. Statutory Authority: RCW 49.17.040, [49.17.]050 and [49.17.]060. WSR 96-22-048, § 296-306A-42523, filed 10/31/96, effective 12/1/96.]

WAC 296-307-42525 What requirements apply to industrial trucks used indoors? (1) LP-gas-fueled industrial trucks may be used in buildings and structures.

(2) No more than two LP-gas containers must be used on an industrial truck for motor fuel purposes.

(3) LP-gas-fueled industrial trucks may be used in buildings frequented by the public, when occupied by the public. The total water capacity of containers on each industrial truck must be a maximum of 105 pounds (nominal 45 pounds LP-gas).

(4) Trucks must be attended at all times in areas occupied by the public.

(5) Industrial trucks must not be parked and left unattended in areas of possible excessive heat or sources of ignition.

[WSR 97-09-013, recodified as § 296-307-42525, filed 4/7/97, effective 4/7/97. Statutory Authority: RCW 49.17.040, [49.17.]050 and [49.17.]060. WSR 96-22-048, § 296-306A-42525, filed 10/31/96, effective 12/1/96.]

WAC 296-307-42527 How must LP-gas-fueled vehicles be garaged? (1) LP-gas-fueled vehicles may be stored or serviced inside garages if there are no leaks in the fuel system and the fuel tanks are not filled beyond the maximum filling capacity allowed.

(2) LP-gas-fueled vehicles being repaired in garages must have the container shut-off valve closed except when fuel is required for engine operation.

(3) Such vehicles must not be parked near sources of heat, open flames, or similar sources of ignition or near open pits unless such pits are adequately ventilated.

[WSR 97-09-013, recodified as § 296-307-42527, filed 4/7/97, effective 4/7/97. Statutory Authority: RCW 49.17.040, [49.17.]050 and [49.17.]060. WSR 96-22-048, § 296-306A-42527, filed 10/31/96, effective 12/1/96.]

WAC 296-307-430 Storage of containers awaiting use or resale.

[WSR 97-09-013, recodified as § 296-307-430, filed 4/7/97, effective 4/7/97. Statutory Authority: RCW 49.17.040, [49.17.]050 and [49.17.]060. WSR 96-22-048, § 296-306A-430, filed 10/31/96, effective 12/1/96.]

WAC 296-307-43001 What does this section cover? WAC 296-307-430 applies to the storage of portable containers a maximum of 1,000 pounds water capacity, filled or partially filled, at user location but not connected for use, or in storage for resale by dealers or resellers. This section does not apply to containers stored at charging plants or at plants devoted primarily to the storage and distribution of LP-gas or other petroleum products.

[Statutory Authority: RCW 49.17.040. WSR 98-24-096, § 296-307-43001, filed 12/1/98, effective 3/1/99. WSR 97-09-013, recodified as § 296-307-43001, filed 4/7/97, effective 4/7/97. Statutory Authority: RCW 49.17.040, [49.17.]050 and [49.17.]060. WSR 96-22-048, § 296-306A-43001, filed 10/31/96, effective 12/1/96.]

WAC 296-307-43003 What general requirements apply to storage of containers? (1) Containers in storage must be located to minimize exposure to excessive temperature rise, physical damage, or tampering.

(2) Containers stored inside must be located away from exits, stairways, or in areas normally used or intended for the safe exit of people.

(3) Container valves must be protected while in storage as follows:

(a) By setting into recess of container to prevent the possibility of their being struck if the container is dropped upon a flat surface; or

(b) By ventilated cap or collar, fastened to container capable of withstanding blow from any direction equivalent to that of a thirty-pound weight dropped four feet. Construction must be such that a blow will not be transmitted to a valve or other connection.

(4) The outlet valves of containers in storage must be closed.

(5) Empty containers that have been in LP-gas service should preferably be stored in the open. When stored inside, they must be considered full containers for the purpose of determining the maximum quantity of LP-gas permitted by this section.

[WSR 97-09-013, recodified as § 296-307-43003, filed 4/7/97, effective 4/7/97. Statutory Authority: RCW 49.17.040, [49.17.]050 and [49.17.]060. WSR 96-22-048, § 296-306A-43003, filed 10/31/96, effective 12/1/96.]

WAC 296-307-43005 How must containers be stored within buildings frequented by the public? DOT containers with a maximum individual water capacity of 2-1/2 pounds, used with completely self-contained hand torches and similar applications, may be stored or displayed in a building frequented by the public. The display of such containers must be limited to a total of 24 units of each brand and size. The total quantity on display and in storage must not exceed 200 pounds LP-gas.

[WSR 97-09-013, recodified as § 296-307-43005, filed 4/7/97, effective 4/7/97. Statutory Authority: RCW 49.17.040, [49.17.]050 and [49.17.]060. WSR 96-22-048, § 296-306A-43005, filed 10/31/96, effective 12/1/96.]

WAC 296-307-43007 How must containers be stored in buildings not frequented by the public? (1) The quantity of LP-gas stored must be a maximum of 300 pounds (approximately 2,550 cubic feet in vapor form), except when stored within special buildings or rooms.

(2) Containers carried as a part of service equipment on highway mobile vehicles are not considered in the total storage capacity if the vehicles are stored in private garages, and are limited to one container per vehicle with a maximum LP-gas capacity of 100 pounds. All container valves must be closed.

[WSR 97-09-013, recodified as § 296-307-43007, filed 4/7/97, effective 4/7/97. Statutory Authority: RCW 49.17.040, [49.17.]050 and [49.17.]060. WSR 96-22-048, § 296-306A-43007, filed 10/31/96, effective 12/1/96.]

WAC 296-307-43009 How must containers be stored within special buildings or rooms? (1) The quantity of LP-gas stored in special buildings or rooms must be a maximum of 10,000 pounds.

(2) The walls, floors, and ceilings of container storage rooms that are within or adjacent to other parts of the building must be constructed of material having at least a two-hour fire resistance rating.

(3) At least 10% of the exterior walls or roof must be of explosion relieving construction.

(4) Each opening from storage rooms to other parts of the building must be protected by a listed one and one-half hour "(B)" fire door.

(5) Such rooms must have no open flames for heating or lighting.

(6) Such rooms must be adequately ventilated both top and bottom to the outside only. The openings from such vents must be at least five feet away from any other opening into any building.

(7) The floors of such rooms must not be below ground level. Any space below the floor must be of solid fill or properly ventilated to the open air.

(8) Such storage rooms must not be located adjoining the line of property occupied by schools, churches, hospitals, athletic fields or other points of public gathering.

[WSR 97-09-013, recodified as § 296-307-43009, filed 4/7/97, effective 4/7/97. Statutory Authority: RCW 49.17.040, [49.17.]050 and [49.17.]060. WSR 96-22-048, § 296-306A-43009, filed 10/31/96, effective 12/1/96.]

WAC 296-307-43011 How must containers be stored outdoors? (1) Storage outside of buildings, for containers awaiting use or resale, must be located according to the table below with respect to:

(a) The nearest important building or group of buildings;

(b) The line of adjoining property that may be built on;

(c) Busy thoroughfares;

(d) The line of adjoining property occupied by schools, churches, hospitals, athletic fields, or other points of public gathering.

Quantity of LP-Gas Stored	Distance
500 pounds or less	0
501 to 2,500 pounds	0*
2,501 to 6,000 pounds	10 feet
6,001 to 10,000 pounds	20 feet
Over 10,000 pounds	25 feet

* Containers must be at least ten feet from any building on adjoining property, any sidewalk, or any of the exposures described in (c) or (d) of this subsection.

(2) Containers must be in a suitable enclosure or otherwise protected against tampering.

[WSR 97-09-013, recodified as § 296-307-43011, filed 4/7/97, effective 4/7/97. Statutory Authority: RCW 49.17.040, [49.17.]050 and [49.17.]060. WSR 96-22-048, § 296-306A-43011, filed 10/31/96, effective 12/1/96.]

WAC 296-307-43013 What fire protection must be provided for stored containers? Storage locations other than supply depots separated and located apart from dealer, reseller, or user establishments must have at least one approved portable fire extinguisher having a minimum rating of 8-B, C.

[WSR 97-09-013, recodified as § 296-307-43013, filed 4/7/97, effective 4/7/97. Statutory Authority: RCW 49.17.040, [49.17.]050 and [49.17.]060. WSR 96-22-048, § 296-306A-43013, filed 10/31/96, effective 12/1/96.]

WAC 296-307-435 LP-gas system installations on commercial vehicles.

[WSR 97-09-013, recodified as § 296-307-435, filed 4/7/97, effective 4/7/97. Statutory Authority: RCW 49.17.040, [49.17.]050 and [49.17.]060. WSR 96-22-048, § 296-306A-435, filed 10/31/96, effective 12/1/96.]

WAC 296-307-43501 What does this section cover? (1) WAC 296-307-435 applies to:

(a) LP-gas system installations on vehicles (self-propelled, trailers, or semitrailers) used for commercial or construction purposes;

(b) All exchangeable container systems with container capacities greater than 105 pounds water capacity (approximately 45 pounds LP-gas capacity); and

(c) Systems using containers permanently mounted on vehicles.

(2) All LP-gas installations on commercial vehicles must meet all requirements of WAC 296-307-410 (unless otherwise indicated) and the additional requirements of this section. When such a vehicle is permanently parked, and LP-gas is supplied from a system not mounted on and secured to the unit, WAC 296-307-415 and 296-307-420 also apply.

(3) This section does not apply to LP-gas motor fuel systems covered by WAC 296-307-425.

[Statutory Authority: RCW 49.17.040. WSR 98-24-096, § 296-307-43501, filed 12/1/98, effective 3/1/99. WSR 97-09-013, recodified as § 296-307-43501, filed 4/7/97, effective 4/7/97. Statutory Authority: RCW 49.17.040, [49.17.]050 and [49.17.]060. WSR 96-22-048, § 296-306A-43501, filed 10/31/96, effective 12/1/96.]

WAC 296-307-43503 How must containers be constructed? Containers must be constructed according to WAC 296-307-41011, and marked according to the applicable requirements of WAC 296-307-41015, and must also meet the following:

(1) Containers designed for use as portable cylinders must be constructed according to DOT specifications.

(2) All other containers whether designed for permanent mounting, or for portable or semiportable use (such as skid tanks), must be constructed as provided for by WAC 296-307-41009(4) and 296-307-41011(1).

(3) Nonrecessed container fittings and accessories must be protected against damage by either:

(a) Their location;

(b) The vehicle frame or bumper; or

(c) Protective housing. The housing must meet the requirements under which the tanks are fabricated with respect to design and construction and must be designed to withstand static loading in any direction equal to twice the weight of the tank and attachments when filled with the lading at a safety factor of at least four, based on the ultimate strength of the material used. The housing must have a weather cover if necessary to ensure proper operation of valves and safety devices.

(4) Manually operated shut-off valves or self-closing internal valves must be closed except during transfer operations.

(5) Permanently installed containers must meet the following requirements:

(a) Tank motor vehicles with frames not made integral with the tank, as by welding, must have turnbuckles or similar positive devices for drawing the tank down tight on the frame. In addition, suitable stops or anchors must be attached to the frame and/or the tank to prevent relative motion between them from starting, stopping, and turning. The stops and anchors must be installed to be accessible for inspection and maintenance.

(b) Any tank motor vehicle designed and constructed so that the cargo tank constitutes the stress member used instead of a frame must be supported by external cradles enclosing at least 120 degrees of the shell circumference. The design calculations must include beam stress, shear stress, torsion stress, bending moment, and acceleration stress for the cargo tank as a whole using a factor of safety of four, based on the ultimate tensile strength of the material. Maximum concentrated stresses that might be created at pads and cradles due to shear, bending, and torsion shall also be calculated according to Appendix G of the American Society of Mechanical Engineers, Unfired Pressure Vessel Code, 1968. Fully loaded vehicles must be assumed to be operating under highway conditions equal to two "g" loading. The effects of fatigue shall be taken into consideration. Cargo tanks mounted on frames may be supported by upright supports attached to pads if these factors are taken into account.

(c) Where any tank support is attached to any part of a tank head, the stresses imposed upon the head must be provided for as required above.

(d) Tank supports, stops, anchors, and bumpers must not be welded directly to the tank but must be attached by means of pads of the same material as the tank. The pad thickness must be at least 1/4 inch, or the thickness of the shell material if less, and no greater than the shell material. Each pad must extend at least four times its thickness, in each direction, beyond the weld attaching the support, bumper, stop, or anchor. Each pad must be preformed to an inside radius no greater than the outside radius of the tank at the place of attachment. Each pad corner must be rounded to a radius at least one-fourth the width of the pad, and no greater than one-half the width of the pad. Weepholes and tell-tale holes, if used, must be drilled or punched before the pads are attached to the tank. Each pad must be attached to the tank by continuous fillet welding using filler material having properties that meet the recommendations of the maker of the shell and head material.

(6) Portable or semiportable containers must meet the applicable requirements of WAC 296-307-42507(3). Containers designed for permanent installation as part of systems under WAC 296-307-420 are prohibited.

(a) Filling connections must have an approved automatic back pressure check valve, excess flow check valve, or quick closing internal valve to prevent excessive escape of gas in case the filling connection is broken.

Exception: Where the filling and discharge connect on a common opening in the container shell, and the opening is fitted with a quick-closing internal valve, the automatic valve is not required.

Every inlet and outlet connection must have a manually or automatically operated shut-off valve. Liquid discharge openings, except those for engine fuel lines, on tanks built after September 1, 1965, must be fitted with a remotely controlled internal shut-off valve. Valves must meet the following requirements:

(i) The seat of the valve must be inside the tank, or in the opening nozzle or flange, or in a companion flange bolted to the nozzle or flange.

(ii) All parts of the valve inside the tank, nozzle, or companion flange must be made of material that protects against corrosion or other deterioration in the presence of the lading.

(iii) The parts must be arranged so that damage to parts exterior to the tank will not prevent effective seating of the valve.

(iv) The valve may be operated mechanically, by hydraulically, or by air, or gas pressure.

(v) The valve must have remote means of automatic closure, both mechanical and thermal, in at least two places for tanks over 3,500 gallons water capacity. These remote control stations must be located at each end of the tank and diagonally opposite. The thermal control mechanism must have a fusible element with a melting point between 220°F and 208°F. At least one remote control station must be provided for tanks of 3,500 gallons water capacity or less, and such actuating means may be mechanical.

(b) All other connections to containers, except those used for gauging devices, thermometer wells, safety-relief devices, and plugged openings, must have suitable automatic excess flow valves, or may instead be fitted with quick-closing internal valves.

The control mechanism for the internal valve must have a secondary control, remote from the fill or discharge connections (for use in the event of accidents or fire during delivery operations), and such control mechanism must have a fusible element with a melting point not over 220°F or less than 208°F.

(c) Excess flow valves must close automatically at the rated flow of vapor or liquid as specified by the valve manufacturers. The flow rating of the piping beyond the excess flow valve must be greater than that of the excess flow valve and such rating must include valves, fittings, and hose.

Exception: When branching or necessary restrictions are incorporated in a piping system so that flow ratings are less than that of the excess flow valve and the tank, then additional excess flow valves must be installed in the piping where such flow rate is reduced.

(d) Container inlets and outlets, except those used for safety-relief valves, liquid-level gauging devices, and pressure gauges, must be labeled to designate whether they communicate with vapor or liquid space when the container is filled to maximum permitted filling density. Labels may be on the valves.

[Statutory Authority: RCW 49.17.040. WSR 98-24-096, § 296-307-43503, filed 12/1/98, effective 3/1/99. WSR 97-09-013, recodified as § 296-307-43503, filed 4/7/97, effective 4/7/97. Statutory Authority: RCW 49.17.040, [49.17.]050 and [49.17.]060. WSR 96-22-048, § 296-306A-43503, filed 10/31/96, effective 12/1/96.]

WAC 296-307-43505 What is the maximum capacity allowed for LP-gas installations on commercial vehicles? A single fuel container used on passenger carrying vehicles must not exceed 200 gallons water capacity.

[WSR 97-09-013, recodified as § 296-307-43505, filed 4/7/97, effective 4/7/97. Statutory Authority: RCW 49.17.040, [49.17.]050 and [49.17.]060. WSR 96-22-048, § 296-306A-43505, filed 10/31/96, effective 12/1/96.]

WAC 296-307-43507 Where must systems be located? (1) Containers must not be installed, transported, or stored (even temporarily) inside any vehicle covered by these standards except as provided by the DOT regulations.

(2) Containers, control valves, and regulating equipment comprising a complete system must be suitably protected against damage and weather. Systems may be installed in a recess vaportight to the inside of the vehicle and accessible from and vented to the outside.

(3) Systems installed outside of mobile units must be located so that discharge from safety-relief devices must be at least 3 feet horizontally away from any opening into the unit below the level of such discharge. When the system is located in a recess vaportight to the inside, vent openings in the recess must be at least 3 feet horizontally away from any opening into the mobile unit below the level of these vents.

(4) There must be no fuel connection between tractor and trailer or other vehicle units.

(5) The container or container carrier must be secured in place by fastenings designed and constructed with a minimum safety factor of four to withstand loading in any direction equal to twice the weight of the container when filled to normal capacity with LP-gas.

[WSR 97-09-013, recodified as § 296-307-43507, filed 4/7/97, effective 4/7/97. Statutory Authority: RCW 49.17.040, [49.17.]050 and [49.17.]060. WSR 96-22-048, § 296-306A-43507, filed 10/31/96, effective 12/1/96.]

WAC 296-307-43509 What requirements apply to valves and accessories? Container valves and accessories must be provided, protected and mounted as follows:

(1) Systems using DOT cylinders according to WAC 296-307-41511.

(2) All other systems according to WAC 296-307-42005 (2) through (8).

(3) Portable, semiportable and permanently mounted containers shall be mounted and protected as provided under WAC 296-307-43503 (2), (5), and (6).

[Statutory Authority: RCW 49.17.040. WSR 98-24-096, § 296-307-43509, filed 12/1/98, effective 3/1/99. WSR 97-09-013, recodified as § 296-307-43509, filed 4/7/97, effective 4/7/97. Statutory Authority: RCW 49.17.040, [49.17.]050 and [49.17.]060. WSR 96-22-048, § 296-306A-43509, filed 10/31/96, effective 12/1/96.]

WAC 296-307-43511 What requirements apply to safety devices? (1) DOT containers must have safety-relief devices as required by DOT regulations.

(2) A final stage regulator of an LP-gas system (excluding any appliance regulator) must have, on the low-pressure side, a relief valve that is set to start to discharge within the limits specified in Table U-7.

(3) The relief valve and space above the regulator and relief valve diaphragms must be vented to the outside air and terminate at a position to minimize the possibility of vapors accumulating at sources of ignition.

(4) Whenever equipment such as a cargo heater or cooler on commercial vehicles is designed to be in operation while in transit, suitable means to stop the flow such as an excess flow valve or other device, must be installed. This device will be actuated to stop the flow in the event of the break in the fuel supply line. All excess flow valves must comply with WAC 296-307-41019(3).

[Statutory Authority: RCW 49.17.040. WSR 98-24-096, § 296-307-43511, filed 12/1/98, effective 3/1/99. WSR 97-09-013 recodified as § 296-307-43511, filed 4/7/97, effective 4/7/97. Statutory Authority: RCW 49.17.040, [49.17.]050 and [49.17.]060. WSR 96-22-048, § 296-306A-43511, filed 10/31/96, effective 12/1/96.]

WAC 296-307-43513 What types of systems may be used on commercial vehicles? Commercial vehicles must use either vapor withdrawal or liquid withdrawal systems.

[WSR 97-09-013, recodified as § 296-307-43513, filed 4/7/97, effective 4/7/97. Statutory Authority: RCW 49.17.040, [49.17.]050 and [49.17.]060. WSR 96-22-048, § 296-306A-43513, filed 10/31/96, effective 12/1/96.]

WAC 296-307-43515 What requirements apply to enclosures and mounting? (1) Housing or enclosures must be designed to provide proper ventilation.

(2) Hoods, domes, or removable portions of cabinets must have means to keep them firmly in place during transit.

(3) The assembly must hold the containers firmly in position and prevent their movement during transit according to WAC 296-307-42507(3).

(4) Containers must be mounted on a substantial support or base secured firmly to the vehicle chassis. Neither the container nor its support must extend below the frame.

[Statutory Authority: RCW 49.17.040. WSR 98-24-096, § 296-307-43515, filed 12/1/98, effective 3/1/99. WSR 97-09-013, recodified as § 296-307-43515, filed 4/7/97, effective 4/7/97. Statutory Authority: RCW 49.17.040, [49.17.]050 and [49.17.]060. WSR 96-22-048, § 296-306A-43515, filed 10/31/96, effective 12/1/96.]

WAC 296-307-43517 What requirements apply to piping, tubing, and fittings? (1) Regulators must be connected directly to the container valve outlet or mounted securely by means of support bracket and connected to the container valve or valves with a listed high pressure flexible connector.

(2) Provision must be made between the regulator outlet and the gas service lines by either a flexible connector or a tubing loop to provide for expansion, contraction, jarring, and vibration.

(3) Aluminum alloy piping is prohibited. Steel tubing must have a minimum wall thickness of 0.049 inch. Steel piping or tubing must be adequately protected against exterior corrosion.

(4) Approved gas tubing fittings must be used for tubing connections.

(5) The fuel line must be firmly fastened in a protected location and where under the vehicle and outside and below any insulation or false bottom, fastenings must prevent abrasion or damage to the gas line due to vibration. Where the fuel line passes through structural members or floors, a rubber grommet or equivalent must be installed to prevent chafing.

(6) The fuel line must be installed to enter the vehicle through the floor directly beneath or adjacent to the appliance that it serves. When a branch line is required, the tee connection must be in the main fuel line and located under the floor and outside the vehicle.

(7) All parts of the system assembly must be designed and secured to preclude such parts working loose during transit.

[WSR 97-09-013, recodified as § 296-307-43517, filed 4/7/97, effective 4/7/97. Statutory Authority: RCW 49.17.040, [49.17.]050 and [49.17.]060. WSR 96-22-048, § 296-306A-43517, filed 10/31/96, effective 12/1/96.]

WAC 296-307-43519 What requirements apply to appliances? (1) LP-gas appliances must be approved for use on commercial vehicles.

(2) In vehicles not intended for human occupancy, where the gas-fired heating appliance is used to protect the cargo, such heater may be unvented, but provision must be made to dispose of the products of combustion to the outside.

(3) In vehicles intended for human occupancy, all gas-fired heating appliances, including water heaters, must be designed or installed to provide for complete separation of the combustion system from the atmosphere of the living space. Such appliances must be installed with the combustion air inlet assembly furnished as a component of the appliance, and with either:

(a) The flue gas outlet assembly furnished as a component of the appliance; or

(b) A listed roof jack if the appliance is listed for such use.

The combustion air inlet assembly, flue gas outlet assembly, and roof jack must extend to the outside atmosphere.

(4) Provision must be made to ensure an adequate supply of outside air for combustion.

(5) All gas-fired heating appliances and water heaters must have an approved automatic device designed to shut off the flow of gas to the main burner and to the pilot in the event the pilot flame is extinguished.

(6) Gas-fired appliances installed in the cargo space must be readily accessible.

(7) Appliances must be constructed or protected to minimize the possible damage or impaired operation resulting from cargo shifting or handling.

(8) Appliances inside the vehicle must be located so that a fire at an appliance will not block the exit route.

[WSR 97-09-013, recodified as § 296-307-43519, filed 4/7/97, effective 4/7/97. Statutory Authority: RCW 49.17.040, [49.17.]050 and [49.17.]060. WSR 96-22-048, § 296-306A-43519, filed 10/31/96, effective 12/1/96.]

WAC 296-307-43521 What general precautions must be followed for LP-gas system installations on commercial vehicles? (1) DOT containers must be marked, maintained, and requalified for use according to DOT regulations.

(2) Containers that have not been requalified according to DOT regulations must be removed from service. Requalified containers must be stamped with the date of requalification. When DOT cylinders are requalified by retesting, the retest must be made according to DOT regulations.

(3) Containers must not be charged with fuel unless they bear the proper markings of the code under which they were constructed, and with their water capacity. In the case of cylinders or portable containers filled by weight, the container must be marked with its tareweight.

(4) DOT containers that have been involved in a fire must not be recharged until they have been requalified for service according to DOT regulations.

(5) API-ASME containers or ASME containers that have been involved in a fire must not be recharged until they have been retested according to the requirements for their original hydrostatic test and found to be suitable for continued service.

"API-ASME (ASME) container" means a container constructed according to the Rules for Construction of Unfired Pressure Vessels, section VIII, Division 1, American Society of Mechanical Engineers (ASME) Boiler and Pressure Vessel Code, 1968 edition.

(6) Containers must not be charged without the consent of the owner.

(7) A permanent caution plate must be provided on the appliance or adjacent to the container outside of any enclosure. It must include the word "caution" and the following or similar instructions.

(a) Be sure all appliance valves are closed before opening container valve.

(b) Connections at appliances, regulators, and containers must be checked periodically for leaks with soapy water or its equivalent.

(c) A match or flame must not be used to check for leaks.

(d) Container valves must be closed except when the equipment is in use.

[WSR 97-09-013, recodified as § 296-307-43521, filed 4/7/97, effective 4/7/97. Statutory Authority: RCW 49.17.040, [49.17.]050 and [49.17.]060. WSR 96-22-048, § 296-306A-43521, filed 10/31/96, effective 12/1/96.]

WAC 296-307-43523 How must containers be charged? Containers must be charged according to DOT specifications.

[WSR 97-09-013, recodified as § 296-307-43523, filed 4/7/97, effective 4/7/97. Statutory Authority: RCW 49.17.040, [49.17.]050 and [49.17.]060. WSR 96-22-048, § 296-306A-43523, filed 10/31/96, effective 12/1/96.]

WAC 296-307-43525 What fire protection must be provided for mobile cook units? Mobile cook units must have at least one approved portable fire extinguisher having a minimum rating of 8-B, C.

[WSR 97-09-013, recodified as § 296-307-43525, filed 4/7/97, effective 4/7/97. Statutory Authority: RCW 49.17.040, [49.17.]050 and [49.17.]060. WSR 96-22-048, § 296-306A-43525, filed 10/31/96, effective 12/1/96.]

WAC 296-307-440 LP-gas service stations.

[WSR 97-09-013, recodified as § 296-307-440, filed 4/7/97, effective 4/7/97. Statutory Authority: RCW 49.17.040, [49.17.]050 and [49.17.]060. WSR 96-22-048, § 296-306A-440, filed 10/31/96, effective 12/1/96.]

WAC 296-307-44001 What does this section cover? WAC 296-307-440 applies to storage containers, dispensing devices, and pertinent equipment in service stations where LP-gas is stored and dispensed into fuel tanks of motor vehicles. LP-gas service stations must meet all requirements of WAC 296-307-410 and the requirements of this section.

[Statutory Authority: RCW 49.17.040. WSR 98-24-096, § 296-307-44001, filed 12/1/98, effective 3/1/99. WSR 97-09-013, recodified as § 296-307-44001, filed 4/7/97, effective 4/7/97. Statutory Authority: RCW 49.17.040, [49.17.]050 and [49.17.]060. WSR 96-22-048, § 296-306A-44001, filed 10/31/96, effective 12/1/96.]

WAC 296-307-44003 How must storage containers be designed and classified? Storage containers must be designed and classified according to the following table:

			Minimum design pressure of container lb. per sp. in. gauge
Container type	**For gases with vapor press. Not to exceed lb. per sp. in. gauge 100°F (37.8°C.)**	**1949 and earlier editions of ASME Code (Par. U-68, U-69)**	**1949 edition of ASME Code (Par.U-200, U-201); 1950, 1952, 1956, 1959, 1962, 1965, and 1968 (Division I) editions of ASME Code; All editions of API-ASME Code[2]**
200[1]	215	200	250

1 Container type may be increased by increments of 25. The minimum design pressure of containers shall be 100% of the container type designation when constructed under 1949 or earlier editions of ASME Code (Par. U-68 and U-69). The minimum design pressure of containers shall be 125% of the container type designation when constructed under: 1. The 1949 ASME Code (Par. U-200 and U-201), 2. 1950, 1952, 1956, 1959, 1962, 1965, and 1968 (Division I) editions of the ASME Code, and 3. All editions of the API-ASME Code.

2 Construction of containers under the API-ASME Code is not authorized after July 1, 1961.

[WSR 97-09-013, recodified as § 296-307-44003, filed 4/7/97, effective 4/7/97. Statutory Authority: RCW 49.17.040, [49.17.]050 and [49.17.]060. WSR 96-22-048, § 296-306A-44003, filed 10/31/96, effective 12/1/96.]

WAC 296-307-44005 What requirements apply to valves and accessories? (1) A filling connection on the container must be fitted with one of the following:

(a) A combination back-pressure check and excess flow valve.

(b) One double or two single back-pressure valves.

(c) A positive shut-off valve, in conjunction with either:

(i) An internal back-pressure valve; or

(ii) An internal excess flow valve.

Instead of an excess flow valve, filling connections may be fitted with a quick-closing internal valve that only opens during operating periods. The mechanism for such valves may have a secondary control that will close automatically in case of fire. The melting point for a fusible plug must be a maximum of 220°F.

(2) A filling pipe inlet terminal off the container must have a positive shut-off valve and either:

(a) A back pressure check valve; or

(b) An excess flow check valve.

(3) All openings in the container must have approved excess flow check valves.

Exceptions:
(a) Filling connections;
(b) Safety-relief connections;
(c) Liquid-level gauging devices; and
(d) Pressure gauge connections.

(4) All container inlets and outlets must be labeled to designate whether they connect with vapor or liquid (labels may be on valves).

Exceptions:
(a) Safety-relief valves;
(b) Liquid-level gauging devices; and
(c) Pressure gauges.

(5) Each storage container must have a suitable pressure gauge.

[WSR 97-09-013, recodified as § 296-307-44005, filed 4/7/97, effective 4/7/97. Statutory Authority: RCW 49.17.040, [49.17.]050 and [49.17.]060. WSR 96-22-048, § 296-306A-44005, filed 10/31/96, effective 12/1/96.]

WAC 296-307-44007 What requirements apply to safety devices? (1) All safety-relief devices must be installed as follows:

(a) On the container and directly connected with the vapor space.

(b) Safety-relief valves and discharge piping shall be protected against physical damage. The outlet must have loose-fitting rain caps. There shall be no return bends or restrictions in the discharge piping.

(c) The discharge from two or more safety-relief valves with the same pressure settings may be run into a common discharge header. The cross-sectional area of such header must be at least equal to the sum of the individual discharges.

(d) Discharge from a safety-relief device that terminates in or beneath any building is prohibited.

(2) Aboveground containers must have safety-relief valves as follows:

(a) The rate of discharge, which may be provided by one or more valves, must be at least that specified in WAC 296-307-41025(2).

(b) The discharge from safety-relief valves must be vented upward to the open air to prevent impingement of escaping gas upon the container. You must use loose-fitting rain caps. On a container having a water capacity greater than 2,000 gallons, the discharge from the safety-relief valves must be vented upward away from the container to a point at least seven feet above the container. Provisions must be made so that any liquid or condensate accumulation inside the relief valve or its discharge pipe will not render the valve inoperative. If a drain is used, you must protect the container, adjacent containers, piping, or equipment against impingement of flame resulting from ignition of the product escaping from the drain.

(3) Underground containers must have safety-relief valves as follows:

(a) The discharge from safety-relief valves must be piped upward to a point at least ten feet above the ground. The discharge lines or pipes must be adequately supported and protected against physical damage.

(b) In areas where the manhole or housing may flood, the discharge from regulator vent lines should be above the highest probable water level.

(c) If no liquid is put into a container until after it is buried and covered, the rate of discharge of the relief valves may be reduced to at least thirty percent of the rate shown in WAC 296-307-41025(2). If liquid fuel is present during installation of containers, the rate of discharge must be the same as for aboveground containers. Only empty containers may be uncovered.

[Statutory Authority: RCW 49.17.040. WSR 98-24-096, § 296-307-44007, filed 12/1/98, effective 3/1/99. WSR 97-09-013, recodified as § 296-307-44007, filed 4/7/97, effective 4/7/97. Statutory Authority: RCW 49.17.040, [49.17.]050 and [49.17.]060. WSR 96-22-048, § 296-306A-44007, filed 10/31/96, effective 12/1/96.]

WAC 296-307-44009 What is the maximum capacity allowed for containers? Individual storage containers must be a maximum of 30,000 gallons water capacity.

[WSR 97-09-013, recodified as § 296-307-44009, filed 4/7/97, effective 4/7/97. Statutory Authority: RCW 49.17.040, [49.17.]050 and [49.17.]060. WSR 96-22-048, § 296-306A-44009, filed 10/31/96, effective 12/1/96.]

WAC 296-307-44011 How must storage containers be installed? (1) Each storage container used exclusively in service station operation must comply with the following table. This table outlines the minimum distances from a container to a building, group of buildings, or adjoining property lines that may be built on.

	Minimum distances	
Water capacity per container (gallons)	**Aboveground and underground (feet)**	**Between aboveground containers (feet)**
Up to 2,000	25	3
Over 2,000	50	5

Note: The above distances may be reduced to at least 10 feet for service station buildings of other than wood frame construction.

(a) Readily ignitible material including weeds and long dry grass, must be removed within 10 feet of containers.

(b) The minimum separation between LP-gas containers and flammable liquid tanks must be 20 feet and the minimum separation between a container and the centerline of the dike must be 10 feet.

(c) LP-gas containers located near flammable liquid containers must be protected against the flow or accumulation of flammable liquids by diking, diversion curbs, or grading.

(d) LP-gas containers located within diked areas for flammable liquid containers are prohibited.

(e) Field welding is permitted only on saddle plates or brackets that were applied by the container manufacturer.

(f) When permanently installed containers are interconnected, you must allow for expansion, contraction, vibration, and settling of containers and interconnecting piping. Where flexible connections are used, they must be approved and designed for a bursting pressure of at least five times the vapor pressure of the product at 100°F. Using nonmetallic hose is prohibited for interconnecting containers.

(g) Where high water table or flood conditions may be encountered, you must protect against container flotation.

(2) Aboveground containers must be installed according to this section.

(a) Containers may be installed horizontally or vertically.

(b) Containers must be protected by crash rails or guards to prevent physical damage unless they are protected by location. Servicing vehicles within 10 feet of containers is prohibited.

(c) Container foundations must be of substantial masonry or other noncombustible material. Containers must be mounted on saddles that permit expansion and contraction, and must provide against excess stresses. Corrosion protection must be provided for tank-mounting areas. Structural metal container supports must be protected against fire.

Exception: This protection is not required on prefabricated storage and pump assemblies, mounted on a common base, with container bottom a maximum of 24 inches above ground with water capacity of 2,000 gallons or less, if the piping connected to the storage and pump assembly is flexible enough to minimize breakage or leakage in case container supports fail.

(3) Underground containers must be installed according to this section.

(a) Containers must be given a protective coating before being placed underground. This coating must be equivalent to hot-dip galvanizing or to two coatings of red lead followed by a heavy coating of coal tar or asphalt. During installation, take care to minimize abrasion or other damage to the coating. Repair coating damage before back-filling.

(b) Containers must be set on a firm foundation (firm earth may be used) and surrounded with earth or sand firmly tamped in place. Backfill should be free of rocks or other abrasive materials.

(c) A minimum of 2 feet of earth cover must be provided. Where ground conditions make impractical, equivalent protection against physical damage must be provided. The portion of the container to which manhole and other connections are attached may be left uncovered. If there is vehicle traffic at the site, containers must be protected by a concrete slab or other cover to prevent the weight of a loaded vehicle imposing a load on the container shell.

[WSR 97-09-013, recodified as § 296-307-44011, filed 4/7/97, effective 4/7/97. Statutory Authority: RCW 49.17.040, [49.17.]050 and [49.17.]060. WSR 96-22-048, § 296-306A-44011, filed 10/31/96, effective 12/1/96.]

WAC 296-307-44013 What equipment must be protected against tampering? Valves, regulators, gauges, and other container fittings must be protected against tampering and physical damage.

[WSR 97-09-013, recodified as § 296-307-44013, filed 4/7/97, effective 4/7/97. Statutory Authority: RCW 49.17.040, [49.17.]050 and [49.17.]060. WSR 96-22-048, § 296-306A-44013, filed 10/31/96, effective 12/1/96.]

WAC 296-307-44015 What requirements apply to the transport truck unloading point? (1) During unloading, the transport truck must not be parked on public thoroughfares and must be at least 5 feet from storage containers. The truck must be positioned so that shut-off valves are accessible.

(2) The filling pipe inlet terminal must not be located within a building nor within 10 feet of any building or driveway. It must be protected against physical damage.

[WSR 97-09-013, recodified as § 296-307-44015, filed 4/7/97, effective 4/7/97. Statutory Authority: RCW 49.17.040, [49.17.]050 and [49.17.]060. WSR 96-22-048, § 296-306A-44015, filed 10/31/96, effective 12/1/96.]

WAC 296-307-44017 What requirements apply to piping, valves, and fittings? (1) Piping may be underground, aboveground, or a combination of both. It must be well supported and protected against physical damage and corrosion.

(2) Piping laid beneath driveways must be installed to prevent physical damage by vehicles.

(3) Piping must be wrought iron or steel (black or galvanized), brass or copper pipe; or seamless copper, brass, or steel tubing and must be suitable for a minimum pressure of

250 psig. Pipe joints may be screwed, flanged, brazed, or welded. The use of aluminum alloy piping or tubing is prohibited.

(4) All shut-off valves (liquid or gas) must be suitable for LP-gas service and designed for at least the maximum pressure to which they may be subjected. Valves that may be subjected to container pressure must have a rated working pressure of at least 250 psig.

(5) All materials used for valve seats, packing, gaskets, diaphragms, etc., must be resistant to the action of LP-gas.

(6) Fittings must be steel, malleable iron, or brass having a minimum working pressure of 250 psig. Cast iron pipe fittings, such as ells, tees and unions must not be used.

(7) All piping must be tested after assembly and proved free from leaks at least at the normal operating pressures.

(8) You must allow for expansion, contraction, jarring, and vibration, and for settling. You may use flexible connections.

[WSR 97-09-013, recodified as § 296-307-44017, filed 4/7/97, effective 4/7/97. Statutory Authority: RCW 49.17.040, [49.17.]050 and [49.17.]060. WSR 96-22-048, § 296-306A-44017, filed 10/31/96, effective 12/1/96.]

WAC 296-307-44019 What requirements apply to pumps and accessory equipment? All pumps and accessory equipment must be suitable for LP-gas service, and designed for at least the maximum pressure to which they may be subjected. Accessories must have a minimum rated working pressure of 250 psig. Positive displacement pumps must have suitable pressure actuated bypass valves permitting flow from pump discharge to storage container or pump suction.

[WSR 97-09-013, recodified as § 296-307-44019, filed 4/7/97, effective 4/7/97. Statutory Authority: RCW 49.17.040, [49.17.]050 and [49.17.]060. WSR 96-22-048, § 296-306A-44019, filed 10/31/96, effective 12/1/96.]

WAC 296-307-44021 What requirements apply to LP-gas dispensing devices? (1) Meters, vapor separators, valves, and fittings in the dispenser must be suitable for LP-gas service and must be designed for a minimum working pressure of 250 psig.

(2) Provisions must be made for venting LP-gas from a dispensing device to a safe location.

(3) Pumps used to transfer LP-gas must allow control of the flow and to prevent leakage or accidental discharge. Means must be provided outside the dispensing device to readily shut off the power in the event of fire or accident.

(4) A manual shut-off valve and an excess flow check valve must be installed downstream of the pump and ahead of the dispenser inlet.

(a) Dispensing hose must be resistant to the action of LP-gas in the liquid phase and designed for a minimum bursting pressure of 1,250 psig.

(b) An excess flow check valve or automatic shut-off valve must be installed at the terminus of the liquid line at the point of attachment of the dispensing hose.

(5) LP-gas dispensing devices must be located at least 10 feet from aboveground storage containers greater than 2,000 gallons water capacity. The dispensing devices must be at least 20 feet from any building (not including canopies), basement, cellar, pit, or line of adjoining property that may be built on and at least 10 feet from sidewalks, streets, or thoroughfares. No drains or blowoff lines must be directed into or in proximity to the sewer systems used for other purposes.

(a) LP-gas dispensing devices must be installed on a concrete foundation or as part of a complete storage and dispensing assembly mounted on a common base, and must be adequately protected from physical damage.

(b) LP-gas dispensing devices must not be installed within a building.

Exception: Dispensing devices may be located under a weather shelter or canopy if the area is not enclosed on more than two sides. If the enclosing sides are adjacent, the area shall be properly ventilated.

(6) Dispensing LP-gas into the fuel container of a vehicle shall be performed by a competent attendant who shall remain at the LP-gas dispenser during the entire transfer operation.

[WSR 97-09-013, recodified as § 296-307-44021, filed 4/7/97, effective 4/7/97. Statutory Authority: RCW 49.17.040, [49.17.]050 and [49.17.]060. WSR 96-22-048, § 296-306A-44021, filed 10/31/96, effective 12/1/96.]

WAC 296-307-44023 Is smoking allowed at LP-gas service stations? Smoking is prohibited on the driveway of service stations in the dispensing areas or transport truck unloading areas. Conspicuous signs prohibiting smoking must be posted within sight of the customer being served. Letters on such signs must be at least 4 inches high. The motors of all vehicles being fueled must be shut off during the fueling operations.

[WSR 97-09-013, recodified as § 296-307-44023, filed 4/7/97, effective 4/7/97. Statutory Authority: RCW 49.17.040, [49.17.]050 and [49.17.]060. WSR 96-22-048, § 296-306A-44023, filed 10/31/96, effective 12/1/96.]

WAC 296-307-44025 What fire protection must be provided at LP-gas service stations? Each service station must have at least one approved portable fire extinguisher with at least an 8-B, C, rating.

[WSR 97-09-013, recodified as § 296-307-44025, filed 4/7/97, effective 4/7/97. Statutory Authority: RCW 49.17.040, [49.17.]050 and [49.17.]060. WSR 96-22-048, § 296-306A-44025, filed 10/31/96, effective 12/1/96.]

Part U-3

Other Hazardous Materials

Dipping and Coating Operations (Dip Tanks)

WAC 296-307-445 Scope.

IMPORTANT:

A **dip tank** is a container holding a liquid other than plain water that is used for dipping or coating. An object may be completely or partially immersed (in a dip tank) or it may be suspended in a vapor coming from the tank.

Exemption: Dip tanks that use a molten material (molten metal, alloy, salt, etc.) are not covered by this chapter.

This chapter **applies** to:

• A dip tank that uses a liquid other than plain water, or the vapor of the liquid, to:

- Clean an object
- Coat an object
- Alter the surface of an object

OR

- Change the character of an object.

• Draining or drying an object that has been dipped or coated.

Examples of covered dipping and coating operations include, but are not limited to:

- Paint dipping
- Anodizing
- Pickling
- Quenching
- Tanning
- Degreasing
- Stripping
- Cleaning
- Dyeing.

Reference: You have to do a hazard assessment to identify hazards or potential hazards in your workplace and determine if PPE is necessary to protect your employees. See personal protective equipment (PPE), WAC 296-307-100 through 296-307-10025.

[Statutory Authority: RCW 49.17.010, 49.17.040, 49.17.050, and 49.17.060. WSR 03-10-068, § 296-307-445, filed 5/6/03, effective 8/1/03.]

WAC 296-307-450 General requirements.

Summary.

Your responsibility:

Safeguard employees working with dip tanks.

You must:

CONSTRUCTION

Construct safe dip tanks

WAC 296-307-45005

VENTILATION

Provide proper ventilation for the vapor area

WAC 296-307-45010

Take additional precautions if you recirculate ventilation system exhaust air into the workplace

WAC 296-307-45015

Take additional precautions when using an exhaust hood

WAC 296-307-45020

INSPECTION

Periodically inspect your dip tanks and associated equipment and correct any deficiencies

WAC 296-307-45025

FIRST AID

Make sure employees working near dip tanks know appropriate first-aid procedures

WAC 296-307-45030

CLEANING

Prepare dip tanks before cleaning

WAC 296-307-45035

WELDING

Protect employees during welding, burning or other work using open flames

WAC 296-307-45045

LIQUIDS HARMFUL TO SKIN

Provide additional protection for employees working near dip tanks that use liquid that may burn, irritate, or otherwise harm the skin

WAC 296-307-45050.

[Statutory Authority: RCW 49.17.010, 49.17.040, 49.17.050, and 49.17.060. WSR 03-10-068, § 296-307-450, filed 5/6/03, effective 8/1/03; WSR 97-09-013, recodified as § 296-307-450, filed 4/7/97, effective 4/7/97. Statutory Authority: RCW 49.17.040, [49.17.]050 and [49.17.]060. WSR 96-22-048, § 296-306A-450, filed 10/31/96, effective 12/1/96.]

Construction

WAC 296-307-45005 Construct safe dip tanks.

You must:

• Make sure dip tanks, including any drain boards, are strong enough to support the expected load.

[Statutory Authority: RCW 49.17.010, 49.17.040, 49.17.050, and 49.17.060. WSR 03-10-068, § 296-307-45005, filed 5/6/03, effective 8/1/03; WSR 97-09-013, recodified as § 296-307-45005, filed 4/7/97, effective 4/7/97. Statutory Authority: RCW 49.17.040, [49.17.]050 and [49.17.]060. WSR 96-22-048, § 296-306A-45005, filed 10/31/96, effective 12/1/96.]

Ventilation

WAC 296-307-45010 Provide proper ventilation for the vapor area.

You must:

• Make sure mechanical ventilation meets the requirements of one or more of the following standards:

- NFPA 34-1995, Standard for Dipping and Coating Processes Using Flammable or Combustible Liquids
- ACGIH's "Industrial Ventilation: A Manual of Recommended Practice" (22nd ed., 1995)
- ANSI Z9.1-1971, Practices for Ventilation and Operation of Open-Surface Tanks and ANSI Z9.2-1979, Fundamentals Governing the Design and Operation of Local Exhaust Systems.

Note: Some, or all, of the consensus standards (such as ANSI and NFPA) may have been revised. If you comply with a later version of a consensus standard, you will be considered to have complied with any previous version of the same consensus standard.

You must:

• Limit the vapor area to the smallest practical space by using mechanical ventilation

• Keep airborne concentration of any substance below twenty-five percent of its lower flammable limit (LFL)

• Make sure mechanical ventilation draws the flow of air into a hood or exhaust duct

• Have a separate exhaust system for each dip tank if the combination of substances being removed could cause a:

- Fire
- Explosion

OR

- Potentially hazardous chemical reaction.

Reference: You need to keep employee exposure within safe levels when the liquid in a dip tank creates an exposure hazard. See Respiratory hazards, chapter 296-307 WAC, Part Y-6.

Note: You may use a tank cover or material that floats on the surface of the liquid to replace or assist ventilation. The method or combination of methods you choose has to maintain the airborne concentration of the hazardous material and the employee's exposure within safe limits.

[Statutory Authority: RCW 49.17.010, 49.17.040, 49.17.050, 49.17.060. WSR 05-01-166, § 296-307-45010, filed 12/21/04, effective 4/2/05; WSR 03-10-068, § 296-307-45010, filed 5/6/03, effective 8/1/03.]

WAC 296-307-45015 Take additional precautions if you recirculate ventilation system exhaust air into the workplace.

You must:

• Only recirculate air that contains no substance at a concentration that could pose a health or safety hazard to employees

• Make sure any exhaust system that recirculates air into the workplace:

- Passes the air through a device that removes contaminants

- Sounds an alarm and automatically shuts down the dip tank operation, if the vapor concentration of any substance in the exhaust air exceeds twenty-five percent of its LFL

- Monitors the concentration of vapor from flammable or combustible liquids with approved equipment.

Note: • The LFL concentration in the air must be determined after the air passes through the air-cleaning device and before the air reenters the workspace

• Most substances will pose a health hazard at a concentration far below twenty-five percent of its LFL.

[Statutory Authority: RCW 49.17.010, 49.17.040, 49.17.050, and 49.17.060. WSR 03-10-068, § 296-307-45015, filed 5/6/03, effective 8/1/03; WSR 97-09-013, recodified as § 296-307-45015, filed 4/7/97, effective 4/7/97. Statutory Authority: RCW 49.17.040, [49.17.]050 and [49.17.]060. WSR 96-22-048, § 296-306A-45015, filed 10/31/96, effective 12/1/96.]

WAC 296-307-45020 Take additional precautions when using an exhaust hood.

You must:

• Make sure each room with an exhaust hood has a source of outside air that:

- Enters the room in a way that will not interfere with the function of the hood

- Replaces at least ninety percent of the air taken in through the hood.

[Statutory Authority: RCW 49.17.010, 49.17.040, 49.17.050, and 49.17.060. WSR 03-10-068, § 296-307-45020, filed 5/6/03, effective 8/1/03.]

Inspection

WAC 296-307-45025 Periodically inspect your dip tanks and associated equipment and correct any deficiencies.

You must:

• Inspect or test your dip tanks and associated equipment periodically, including:

- Covers

- Overflow pipes

- Bottom drains and valves

- Electrical wiring, equipment, and grounding connections

- Ventilating systems

- Fire extinguishing equipment.

• Inspect the hoods and ductwork of the ventilation system for corrosion and damage and make sure the airflow is adequate:

- At least quarterly during operation

- Prior to operation after a prolonged shutdown.

• Promptly fix any deficiencies found.

Note: • To assist you in tracking your inspections and actions taken from those inspections, you may want to keep a written record

• It is recommended that inspections be at least quarterly even if the system is not operating. Depending on the chemicals in use more frequent inspection may be required.

[Statutory Authority: RCW 49.17.010, 49.17.040, 49.17.050, and 49.17.060. WSR 03-10-068, § 296-307-45025, filed 5/6/03, effective 8/1/03; WSR 97-09-013, recodified as § 296-307-45025, filed 4/7/97, effective 4/7/97. Statutory Authority: RCW 49.17.040, [49.17.]050 and [49.17.]060. WSR 96-22-048, § 296-306A-45025, filed 10/31/96, effective 12/1/96.]

First Aid

WAC 296-307-45030 Make sure employees working near dip tanks know appropriate first-aid procedures.

You must:

• Make sure your employees know the appropriate first-aid procedures for the hazards of your dipping and coating operations.

Note: • First-aid procedures are contained in the material safety data sheet (MSDS) for the chemicals used in the dip tank

• First-aid supplies appropriate for the hazards of the dipping or coating operation need to be located near the dip tank to be considered "readily available" as required by WAC 296-307-03920.

Reference: There are additional requirements that may include providing emergency washing facilities and employee training. See first aid, WAC 296-307-039, and employer chemical hazard communication, WAC 296-307-550.

[Statutory Authority: RCW 49.17.010, 49.17.040, 49.17.050, and 49.17.060. WSR 03-10-068, § 296-307-45030, filed 5/6/03, effective 8/1/03.]

Cleaning

WAC 296-307-45035 Prepare dip tanks before cleaning.

You must:

(1) Drain the contents of the tank and open any cleanout doors.

(2) Ventilate the tank to clear any accumulated hazardous vapors.

Reference: There may be requirements that apply before an employee enters a dip tank. See Confined spaces, WAC 296-307-642 and safety procedures, WAC 296-307-320.

[Statutory Authority: RCW 49.17.010, 49.17.040, 49.17.050, 49.17.060. WSR 05-01-166, § 296-307-45035, filed 12/21/04, effective 4/2/05; WSR 03-10-068, § 296-307-45035, filed 5/6/03, effective 8/1/03.]

Welding

WAC 296-307-45045 Protect employees during welding, burning, or other work using open flames.

You must:

• Make sure the dip tank and the area around it are thoroughly cleaned of solvents and vapors before performing work involving:

- Welding

- Burning

OR

- Open flames.

Reference: There are additional requirements for this type of work. See Welding, cutting and brazing, WAC 296-307-475, and Respirators, chapter 296-307 WAC, Part Y-5.

[Statutory Authority: RCW 49.17.010, 49.17.040, 49.17.050, 49.17.060. WSR 05-01-166, § 296-307-45045, filed 12/21/04, effective 4/2/05; WSR 03-10-068, § 296-307-45045, filed 5/6/03, effective 8/1/03.]

Liquids Harmful to Skin

WAC 296-307-45050 Protect employees that use liquids that may burn, irritate, or otherwise harm the skin.

You must:

(1) Make sure washing facilities, including hot water, are available for every ten employees that work with dip tank liquids.

(2) Satisfy medical requirements:

• Make sure an employee with any small skin abrasion, cut, rash, or open sore receives treatment by a properly designated person

• Make sure an employee with a sore, burn, or other skin lesion that needs medical treatment, has a physician's approval before they perform their regular work

• Make sure employees who work with chromic acid receive periodic examinations of their exposed body parts, especially their nostrils.

Note: • Periodic means on a yearly basis unless otherwise indicated

• Any time chromic acid spills onto an employee's skin or their clothing is saturated, a physician should be responsible for evaluating and monitoring the area where chromic acid made contact with the skin.

You must:

(3) Provide lockers or other storage space to prevent contamination of street clothes.

Reference: You have to do a hazard assessment to identify hazards or potential hazards in your workplace and determine if PPE is necessary to protect your employees. See Personal protective equipment (PPE), WAC 296-307-100.

[Statutory Authority: RCW 49.17.010, 49.17.040, 49.17.050, and 49.17.060. WSR 03-10-068, § 296-307-45050, filed 5/6/03, effective 8/1/03.]

WAC 296-307-455 Additional requirements for dip tanks using flammable or combustible liquids.

Summary.

IMPORTANT:

This section applies to:

• Flammable and combustible liquids (flashpoint below 200°F)

• Liquids that have a flashpoint of 200°F (93.3°C) or higher if you:

- Heat the liquid
- Dip a heated object in the tank

Your responsibility:

Safeguard employees working with dip tanks containing flammable or combustible liquids

You must:

CONSTRUCTION

Include additional safeguards when constructing dip tanks

WAC 296-307-45505

Provide overflow pipes

WAC 296-307-45510

Provide bottom drains

WAC 296-307-45515

FIRE PROTECTION

Provide fire protection in the vapor area

WAC 296-307-45520

Provide additional fire protection for large dip tanks

WAC 296-307-45525

ELECTRICAL WIRING AND EQUIPMENT AND SOURCES OF IGNITION

Prevent static electricity sparks or arcs when adding liquids to a dip tank

WAC 296-307-45535

Control ignition sources

WAC 296-307-45540

Provide safe wiring and electrical equipment where the liquid can drip or splash

WAC 296-307-45545

HOUSEKEEPING

Keep the area around dip tanks clear of combustible material and properly dispose of waste

WAC 296-307-45550

HEATING LIQUID

Make sure heating the liquid in your dip tanks does not cause a fire

WAC 296-307-45555

HEAT DRYING

Make sure a heating system used for drying objects does not cause a fire

WAC 296-307-45560

CONVEYORS

Make sure the conveyor system for dip tanks is safe

WAC 296-307-45565

[Statutory Authority: RCW 49.17.010, 49.17.040, 49.17.050, and 49.17.060. WSR 03-10-068, § 296-307-455, filed 5/6/03, effective 8/1/03.]

Construction

WAC 296-307-45505 Include additional safeguards when constructing dip tanks.

You must:

(1) Make sure the dip tank, drain boards (if provided), and supports are made of noncombustible material.

(2) Make sure piping connections on drains and overflow pipes allow easy access to the inside of the pipe for inspection and cleaning.

[Statutory Authority: RCW 49.17.010, 49.17.040, 49.17.050, and 49.17.060. WSR 03-10-068, § 296-307-45505, filed 5/6/03, effective 8/1/03.]

WAC 296-307-45510 Provide overflow pipes.

You must:

• Provide an overflow pipe on dip tanks that:

- Hold more than one hundred fifty gallons of liquid

OR

- Have more than ten square feet of liquid surface area.

• Make sure the overflow pipe is:

- Properly trapped
- Able to prevent the dip tank from overflowing
- Three inches or more (7.6 cm) in diameter
- Discharged to a safe location.

Note: Discharged to a safe location could be a:

• Safe location outside the building

OR

• Closed, properly vented salvage tank or tanks that can hold more than the dip tank.

You must:

• Make sure the bottom of the overflow pipe is at least six inches (15.2 cm) below the top of the tank.

Note: The overflow pipe should be large enough to remove water applied to the liquid surface of the dip tank from automatic sprinklers or other sources in the event of fire. Smaller dip tanks should be equipped with overflow pipes, if practical.

[Statutory Authority: RCW 49.17.010, 49.17.040, 49.17.050, and 49.17.060. WSR 03-10-068, § 296-307-45510, filed 5/6/03, effective 8/1/03.]

WAC 296-307-45515 Provide bottom drains.

Exemption: A bottom drain is not required if:

- The viscosity of the liquid makes it impractical to empty the tank by gravity or pumping

OR

- The dip tank has an automatic closing cover that meets the requirements of WAC 296-307-45530.

You must:

• Provide a bottom drain on all dip tanks that hold more than five hundred gallons of liquid

• Make sure the bottom drain:

- Is properly trapped
- Will empty the dip tank during a fire
- Has pipes large enough to empty the tank within five minutes
- Uses automatic pumps if gravity draining is not practical
- Is capable of both manual and automatic operation
- Discharges to a safe location.

Note: Discharges to a safe location could be a:

• Safe location outside the building

OR

• Closed, properly vented salvage tank or tanks that can hold more than the dip tank.

You must:

• Make sure manual operation of the bottom drain is performed from a safe and easily accessible location.

[Statutory Authority: RCW 49.17.010, 49.17.040, 49.17.050, and 49.17.060. WSR 03-10-068, § 296-307-45515, filed 5/6/03, effective 8/1/03.]

Fire Protection

WAC 296-307-45520 Provide fire protection in the vapor area.

You must:

• Provide a manual fire extinguisher near the tank that is suitable for putting out flammable and combustible liquid fires.

[Statutory Authority: RCW 49.17.010, 49.17.040, 49.17.050, and 49.17.060. WSR 03-10-068, § 296-307-45520, filed 5/6/03, effective 8/1/03.]

WAC 296-307-45525 Provide additional fire protection for large dip tanks.

You must:

• Provide at least one automatic fire extinguishing system or an automatic dip tank cover if the tank:

- Holds one hundred fifty gallons or more of liquid

OR

- Has four square feet or more of liquid surface area.

• Make sure automatic fire extinguishing systems or automatic dip tank covers meet the requirements of Table 1.

Exemption: An automatic fire extinguishing system or an automatic dip tank cover is **not** required for a hardening or tempering tank that:

• Holds less than five hundred gallons

OR

• Has less than twenty-five square feet of liquid surface area.

Table 1: Automatic Fire Protection System Requirements

If you provide:	Then you must:
An automatic fire extinguishing system	• Use extinguishing materials suitable for a fire fueled by the liquid in the tank • Make sure the system protects the: - Tanks - Drain boards - Stock over drain boards.
A dip tank cover	• Make sure the cover is: - Closed by approved automatic devices in the event of fire - Able to be manually activated - Kept closed when the tank is not being used - Made of noncombustible material or metal-clad material with locked metal joints.

[Statutory Authority: RCW 49.17.010, 49.17.040, 49.17.050, and 49.17.060. WSR 03-10-068, § 296-307-45525, filed 5/6/03, effective 8/1/03.]

Electrical Wiring and Equipment and Sources of Ignition

WAC 296-307-45535 Prevent static electricity sparks or arcs when adding liquids to a dip tank.

You must:

• Make sure any portable container used to add liquid to the tank is:

- Electrically bonded to the dip tank
- Positively grounded.

[Statutory Authority: RCW 49.17.010, 49.17.040, 49.17.050, and 49.17.060. WSR 03-10-068, § 296-307-45535, filed 5/6/03, effective 8/1/03.]

WAC 296-307-45540 Control ignition sources.

You must:

(1) Make sure the vapor areas and adjacent areas do not have any:

• Open flames
• Spark producing devices
• Heated surfaces hot enough to ignite vapors.

(2) Use explosion-proof wiring and equipment in the vapor area.

Reference: Electrical wiring and equipment has to meet the requirements of the applicable hazardous (classified) location. See Hazardous (classified) locations, WAC 296-307-37209.

You must:

(3) Prohibit smoking in any vapor area:

• Post an easily seen "NO SMOKING" sign near each dip tank.

[Statutory Authority: RCW 49.17.010, 49.17.040, 49.17.050, and 49.17.060. WSR 03-10-068, § 296-307-45540, filed 5/6/03, effective 8/1/03.]

WAC 296-307-45545 Provide safe electrical wiring and equipment where the liquid can drip or splash.

You must:

• Make sure all electrical wiring and equipment in the vapor area is approved for areas that have:

- Deposits of easily ignited residue
- Explosive vapor.

Exemption: This does not apply to wiring that is:
- In rigid conduit, threaded boxes or fittings
- Has no taps, splices, or terminal connections.

[Statutory Authority: RCW 49.17.010, 49.17.040, 49.17.050, and 49.17.060. WSR 03-10-068, § 296-307-45545, filed 5/6/03, effective 8/1/03.]

Housekeeping

WAC 296-307-45550 Keep the area around dip tanks clear of combustible material and properly dispose of waste.

You must:

(1) Make sure the area surrounding dip tanks is:

- Completely free of combustible debris
- As free of combustible stock as possible.

(2) Provide approved metal waste cans that are:

- Used for immediate disposal of rags and other material contaminated with liquids from dipping or coating operations
- Emptied and the contents properly disposed of at the end of each shift.

[Statutory Authority: RCW 49.17.010, 49.17.040, 49.17.050, and 49.17.060. WSR 03-10-068, § 296-307-45550, filed 5/6/03, effective 8/1/03.]

Heating Liquid

WAC 296-307-45555 Make sure heating the liquid in your dip tanks does not cause a fire.

You must:

• Keep the temperature of the liquid in the dip tank:

- Below the liquid's boiling point
- At least 100°F below the liquid's autoignition temperature.

[Statutory Authority: RCW 49.17.010, 49.17.040, 49.17.050, and 49.17.060. WSR 03-10-068, § 296-307-45555, filed 5/6/03, effective 8/1/03.]

Heat Drying

WAC 296-307-45560 Make sure a heating system used for drying objects does not cause a fire.

You must:

• Make sure the heating system used in a drying operation that could cause ignition:

- Has adequate mechanical ventilation that operates before and during the drying operation
- Shuts down automatically if a ventilating fan fails to maintain adequate ventilation
- Is installed as required by NFPA 86-1999, Standard for Ovens and Furnaces.

Note: Some, or all, of the consensus standards (such as ANSI and NFPA) may have been revised. If you comply with a later version of a consensus standard, you will be considered to have complied with any previous version of the same consensus standard.

[Statutory Authority: RCW 49.17.010, 49.17.040, 49.17.050, and 49.17.060. WSR 03-10-068, § 296-307-45560, filed 5/6/03, effective 8/1/03.]

Conveyors

WAC 296-307-45565 Make sure conveyor systems are safe.

You must:

• Make sure the conveyor system shuts down automatically if:

- The ventilation system fails to maintain adequate ventilation

OR

- There is a fire.

[Statutory Authority: RCW 49.17.010, 49.17.040, 49.17.050, and 49.17.060. WSR 03-10-068, § 296-307-45565, filed 5/6/03, effective 8/1/03.]

WAC 296-307-460 Additional requirements for dip tanks used for specific processes.

Summary.

Your responsibility:

Safeguard employees working with dip tanks used for specific processes

You must:

HARDENING OR TEMPERING

Meet specific requirements if you use a hardening or tempering tank

WAC 296-307-46005

VAPOR DEGREASING

Provide additional safeguards for vapor degreasing tanks

WAC 296-307-46025

SPRAY CLEANING OR DEGREASING

Control liquid spray over an open surface cleaning or degreasing tank

WAC 296-307-46030.

[Statutory Authority: RCW 49.17.010, 49.17.040, 49.17.050, and 49.17.060. WSR 03-10-068, § 296-307-460, filed 5/6/03, effective 8/1/03.]

Hardening or Tempering

WAC 296-307-46005 Meet specific requirements if you use a hardening or tempering tank.

You must:

(1) Provide an automatic fire extinguishing system or an automatic dip tank cover for any hardening and tempering tank that uses flammable or combustible liquids and:

- Holds five hundred gallons (1893 L) or more of liquid

OR

- Has twenty-five square feet (2.37 m^2) or more of liquid surface area.

(2) Prevent fires.

• Make sure hardening and tempering tanks are:

- **Not** located on or near combustible flooring
- Located as far away as practical from furnaces
- Equipped with noncombustible hoods and vents (or equally effective devices) for venting to the outside.

• Treat vent ducts as flues and keep them away from combustible material, particularly roofs.

(3) Make sure air under pressure is not used to:

• Fill the tank

OR

• Agitate the liquid in the tank.

(4) Equip each tank with an alarm that will sound when the temperature is within 50°F (10°C) of the liquid's flashpoint (alarm set point).

(5) Make sure a limit switch shuts down conveyors supplying work to the tank when the temperature reaches the alarm setpoint, if operationally practical.

(6) Have a circulating cooling system if the temperature of the liquid can exceed the alarm set point.

Note: The bottom drain of the tank may be combined with the oil circulating system if the requirements for bottom drains in WAC 296-307-45515 are satisfied.

[Statutory Authority: RCW 49.17.010, 49.17.040, 49.17.050, and 49.17.060. WSR 03-10-068, § 296-307-46005, filed 5/6/03, effective 8/1/03.]

Vapor Degreasing

WAC 296-307-46025 Provide additional safeguards for vapor degreasing tanks.

You must:

(1) Make sure, if the tank has a condenser or a vapor-level thermostat, that it keeps the vapor level at least:

• Thirty-six inches (91 cm) below the top of the tank if the width of the tank is seventy-two inches or more

OR

• One-half the tank width below the top of the tank if the tank is less than seventy-two inches wide.

(2) Make sure, if you use gas as a fuel to heat the tank liquid, that the combustion chamber is airtight (except for the flue opening) to prevent solvent vapors from entering the air-fuel mixture.

(3) Make sure the exhaust flue:

• Is made of corrosion-resistant material

• Extends to the outside

• Has a draft diverter if mechanical exhaust is used.

(4) Take special precautions to keep solvent vapors from mixing with the combustion air of the heater if chlorinated or fluorinated hydrocarbon solvents (for example, trichloroethylene or freon) are used in the dip tank.

(5) Keep the temperature of the heating element low enough to keep a solvent or mixture from:

• Decomposing

OR

• Generating excessive vapor.

[Statutory Authority: RCW 49.17.010, 49.17.040, 49.17.050, and 49.17.060. WSR 03-10-068, § 296-307-46025, filed 5/6/03, effective 8/1/03.]

Spray Cleaning or Degreasing

WAC 296-307-46030 Control liquid spray over an open surface cleaning or degreasing tank.

You must:

• Control the spray to the greatest extent feasible by:

- Enclosing the spraying operation as completely as possible

- Using mechanical ventilation to provide enough inward air velocity to prevent the spray from leaving the vapor area.

Note: Mechanical baffles may be used to help prevent the discharge of spray.

Reference: Spray painting operations are covered in Spray-finishing operations, WAC 296-62-11019.

[Statutory Authority: RCW 49.17.010, 49.17.040, 49.17.050, and 49.17.060. WSR 03-10-068, § 296-307-46030, filed 5/6/03, effective 8/1/03.]

WAC 296-307-465 Definitions.

ACGIH: American Conference of Governmental Industrial Hygienists.

Adjacent area: Any area within twenty feet (6.1 m) of a vapor area that is not separated from the vapor area by tight partitions.

ANSI: American National Standards Institute.

Approved: Approved or listed by a nationally recognized testing laboratory. Refer to Federal Regulation 29 C.F.R. 1910.7, for definition of nationally recognized testing laboratory.

Autoignition temperature: The minimum temperature required to cause self-sustained combustion without any other source of heat.

Combustible liquid: A liquid having a flashpoint of at least 100°F (37.8°C) and below 200°F (93.3°C). Mixtures with at least ninety-nine percent of their components having flashpoints of 200°F (93.3°C) or higher are not considered combustible liquids.

Detearing: A process for removing excess wet coating material from the bottom edge of a dipped or coated object or material by passing it through an electrostatic field.

Dip tank: A container holding a liquid other than plain water that is used for dipping or coating. An object may be immersed (or partially immersed) in a dip tank or it may be suspended in a vapor coming from the tank.

Flammable liquid: Any liquid having a flashpoint below 100°F (37.8°C), except any mixture having components with flashpoints of 100°F (37.8°C) or higher, the total of which make up ninety-nine percent or more of the total volume of the mixture.

Flashpoint: The minimum temperature at which a liquid gives off a vapor in sufficient concentration to ignite when tested by any of the measurement methods described in the definition of flashpoint in WAC 296-307-55060.

Lower flammable limit: The lowest concentration of a material that will propagate a flame. The LFL is usually expressed as a percent by volume of the material in air (or other oxidant).

NFPA: National Fire Protection Association.

Vapor area: Any area in the vicinity of dip tanks, their drain boards or associated drying, conveying, or other equipment where the vapor concentration could exceed twenty-five percent of the lower flammable limit (LFL) for the liquid in the tank.

You: Means the employer.

[Statutory Authority: RCW 49.17.010, 49.17.040, 49.17.050, and 49.17.060. WSR 03-10-068, § 296-307-465, filed 5/6/03, effective 8/1/03.]

Part V

Welding

WAC 296-307-475 Welding, cutting, and brazing.

[WSR 97-09-013, recodified as § 296-307-475, filed 4/7/97, effective 4/7/97. Statutory Authority: RCW 49.17.040, [49.17.]050 and [49.17.]060. WSR 96-22-048, § 296-306A-475, filed 10/31/96, effective 12/1/96.]

WAC 296-307-47501 What definitions apply to this part? "Welder" and "welding operator" mean any operator of electric or gas welding and cutting equipment.

All other welding terms are defined according to American Welding Society, Terms and Definitions, A3.0-1969.

[WSR 97-09-013, recodified as § 296-307-47501, filed 4/7/97, effective 4/7/97. Statutory Authority: RCW 49.17.040, [49.17.]050 and [49.17.]060. WSR 96-22-048, § 296-306A-47501, filed 10/31/96, effective 12/1/96.]

WAC 296-307-480 Installation and operation of oxygen fuel gas systems for welding and cutting.

[WSR 97-09-013, recodified as § 296-307-480, filed 4/7/97, effective 4/7/97. Statutory Authority: RCW 49.17.040, [49.17.]050 and [49.17.]060. WSR 96-22-048, § 296-306A-480, filed 10/31/96, effective 12/1/96.]

WAC 296-307-48001 What general requirements apply to oxygen fuel gas systems? (1) Explosive mixtures of fuel gases and air or oxygen must be guarded against. No accessory that allows air or oxygen to mix with flammable gases prior to use must be allowed unless approved for that purpose.

Exception: Air or oxygen may mix with flammable gases at the burner or in a standard torch.

(2) Acetylene must never be generated, piped (except in approved cylinder manifolds) or used at a pressure in excess of 15 psi gauge pressure or 30 psi absolute pressure. (The 30 psi absolute pressure limit is intended to prevent unsafe use of acetylene in pressurized chambers such as caissons, underground excavations or tunnel construction.) Using liquid acetylene is prohibited.

Exception: This requirement does not apply to storage of acetylene dissolved in a suitable solvent in cylinders manufactured and maintained according to DOT requirements, or to acetylene for chemical use.

(3) Only approved apparatus such as torches, regulators or pressure-reducing valves, acetylene generators, and manifolds must be used. Replacement tips may be used on approved torches, if the replacement tips are made to the same specifications as the original, or when replacements are used with convertor/adaptors that meet the same specifications.

(4) Before leaving any employee in charge of the oxygen or fuel-gas supply equipment, including generators, and oxygen or fuel-gas distribution piping systems, you must ensure that the employee has received proper instruction and is competent to do the work. Rules and instructions covering the operation and maintenance of oxygen or fuel-gas supply equipment including generators, and oxygen or fuel-gas distribution piping systems must be readily available.

[WSR 97-09-013, recodified as § 296-307-48001, filed 4/7/97, effective 4/7/97. Statutory Authority: RCW 49.17.040, [49.17.]050 and [49.17.]060. WSR 96-22-048, § 296-306A-48001, filed 10/31/96, effective 12/1/96.]

WAC 296-307-48003 What requirements apply to portable cylinders? All portable cylinders used for storing and shipping compressed gases must be constructed and maintained according to DOT regulations.

(1) Compressed gas cylinders must be legibly marked with either the chemical or the trade name of the gas. The marking must be a permanent stencil, stamp, or label. Whenever practical, the marking must be located on the shoulder of the cylinder.

(2) Compressed gas cylinders must have connections that meet the requirements of the American National Standard Compressed Gas Cylinder Valve Outlet and Inlet Connections, ANSI B 57.1-1965.

(3) All cylinders with a water weight capacity greater than thirty pounds must have means of connecting a valve protection cap or with a collar or recess to protect the valve.

[WSR 97-09-013, recodified as § 296-307-48003, filed 4/7/97, effective 4/7/97. Statutory Authority: RCW 49.17.040, [49.17.]050 and [49.17.]060. WSR 96-22-048, § 296-306A-48003, filed 10/31/96, effective 12/1/96.]

WAC 296-307-48005 What general requirements apply to storing compressed gas cylinders? (1) Cylinders must be kept away from radiators and other sources of heat.

(2) Indoors, cylinders must be stored in a well-protected, well-ventilated, dry area, at least twenty feet from highly combustible materials such as oil or excelsior. Cylinders should be stored in assigned places away from elevators, stairs, or gangways. Assigned storage spaces must be located where cylinders will not be knocked over or damaged by passing or falling objects, or subject to tampering. All cylinder enclosures must be ventilated.

(3) Empty cylinders must have their valves closed.

(4) Valve protection caps on cylinders designed to accept a cap, must always be in place and hand-tight, except when cylinders are in use or connected for use.

[WSR 97-09-013, recodified as § 296-307-48005, filed 4/7/97, effective 4/7/97. Statutory Authority: RCW 49.17.040, [49.17.]050 and [49.17.]060. WSR 96-22-048, § 296-306A-48005, filed 10/31/96, effective 12/1/96.]

WAC 296-307-48007 How must fuel-gas cylinders be stored? Cylinders stored indoors, except those in use or attached ready for use, must be limited to a total gas capacity of 2,000 cubic feet or 300 pounds of LP-gas.

(1) Cylinders in excess of 2,000 cubic feet total gas capacity or 300 pounds of LP-gas, must be stored in a separate room or compartment that meets the requirements of 252 (a)(8) and (9) C.F.R., or cylinders must be kept outside or in a special building. Special buildings, rooms or compartments must be free from open flame for heating or lighting and must be well ventilated. They may also be used for storage of a maximum of 600 pounds of calcium carbide, when contained in metal containers complying with 252 (a)(7)(a) and (b) C.F.R. Signs should be conspicuously posted in such rooms reading, "Danger—No smoking, matches or open lights," or other equivalent wording.

(2) Acetylene cylinders must be stored valve end up.

[WSR 97-09-013, recodified as § 296-307-48007, filed 4/7/97, effective 4/7/97. Statutory Authority: RCW 49.17.040, [49.17.]050 and [49.17.]060. WSR 96-22-048, § 296-306A-48007, filed 10/31/96, effective 12/1/96.]

WAC 296-307-48009 How must oxygen cylinders be stored? (1) Oxygen cylinders must not be stored near highly combustible material, especially oil and grease; or near reserve stocks of carbide and acetylene or other fuel-gas cylinders, or near any other substance likely to cause or accelerate fire; or in an acetylene generator compartment.

(2) Oxygen cylinders stored in outside generator houses must be separated from the generator or carbide storage rooms by a noncombustible partition having a fire-resistance rating of at least one hour. This partition must be without openings and must be gastight.

(3) Oxygen cylinders in storage must be separated from fuel-gas cylinders or combustible materials (especially oil or grease), a minimum of 20 feet or by a noncombustible barrier at least five feet high having a fire-resistance rating of at least one-half hour. (Cylinders "in-use," secured to a hand truck or structural member, with regulators, hoses, and torch temporarily removed for security purposes overnight or weekends, are not considered "in-storage.")

(4) Where a liquid oxygen system is to be used to supply gaseous oxygen for welding or cutting and the system has a storage capacity of more than 13,000 cubic feet of oxygen (measured at 14.7 psi(a) and 70°F), connected in service or ready for service, or more than 25,000 cubic feet of oxygen (measured at 14.7 psi(a) and 70°F), including unconnected reserves on hand at the site, it must meet the requirements of the Standard for Bulk Oxygen Systems at Consumer Sites, NFPA No. 566-1965.

[WSR 97-09-013, recodified as § 296-307-48009, filed 4/7/97, effective 4/7/97. Statutory Authority: RCW 49.17.040, [49.17.]050 and [49.17.]060. WSR 96-22-048, § 296-306A-48009, filed 10/31/96, effective 12/1/96.]

WAC 296-307-48011 What general operating procedures apply to working with cylinders and containers? (1) The numbers and markings stamped into cylinders must not be tampered with.

(2) Cylinders, cylinder valves, couplings, regulators, hose, and apparatus must be kept free from oily or greasy substances. Oxygen cylinders or apparatus must not be handled with oily hands or gloves. A jet of oxygen must never be permitted to strike an oily surface, greasy clothes, or enter a fuel oil or other storage tank.

(3) Cylinders must be kept far enough away from the actual welding or cutting operation so that sparks, hot slag, or flame will not reach them, or fire-resistant shields must be provided.

(4) No person, other than the gas supplier, may attempt to mix gases in a cylinder. No one, except the owner of the cylinder or person authorized by the owner, may refill a cylinder.

(5) Cylinders must not be placed where they might become part of an electric circuit. Contacts with third rails, trolley wires, etc., must be avoided.

(6) Fuel-gas cylinders must be placed with valve end up whenever they are in use. Liquefied gases must be stored and shipped with the valve end up.

(7) A suitable cylinder truck, chain, or other steadying device must be used to prevent cylinders from being knocked over while in use.

[WSR 97-09-013, recodified as § 296-307-48011, filed 4/7/97, effective 4/7/97. Statutory Authority: RCW 49.17.040, [49.17.]050 and [49.17.]060. WSR 96-22-048, § 296-306A-48011, filed 10/31/96, effective 12/1/96.]

WAC 296-307-48013 What requirements apply to safety devices on cylinders? (1) Valve-protection caps must not be used for lifting cylinders from one vertical position to another. Bars must not be used under valves or valve-protection caps to pry cylinders loose when frozen to the ground or otherwise fixed; we recommend using warm (not boiling) water. Valve-protection caps are designed to protect cylinder valves from damage.

(2) Cylinders without fixed hand wheels must have keys, handles, or nonadjustable wrenches on valve stems while these cylinders are in service. In multiple cylinder installations only one key or handle is required for each manifold.

(3) No one may tamper with safety devices in cylinders or valves.

(4) Nothing may be placed on top of an acetylene cylinder when in use that may damage the safety device or interfere with the quick closing of the valve.

(5) Where a special wrench is required it must be left in position on the stem of the valve while the cylinder is in use so that the fuel-gas flow can be quickly turned off in case of emergency. In the case of manifolded or coupled cylinders at least one such wrench must always be available for immediate use.

(6) Cylinders with leaking fuse plugs or other leaking safety devices should be plainly marked with a warning not to approach them with a lighted cigarette or other source of ignition. You should notify the supplier promptly and follow the supplier's instructions as to their return.

[WSR 97-09-013, recodified as § 296-307-48013, filed 4/7/97, effective 4/7/97. Statutory Authority: RCW 49.17.040, [49.17.]050 and [49.17.]060. WSR 96-22-048, § 296-306A-48013, filed 10/31/96, effective 12/1/96.]

WAC 296-307-48015 How must cylinders be transported? (1) When transporting cylinders by a crane or derrick, a cradle, boat, or suitable platform must be used. Slings or electric magnets are prohibited for this purpose. Valve-protection caps, where cylinder is designed to accept a cap, must always be in place.

(2) Unless cylinders are secured on a special truck, regulators must be removed and valve-protection caps, when provided for, must be put in place before cylinders are moved.

(3) When cylinders are transported by powered vehicle they must be secured in a vertical position.

[WSR 97-09-013, recodified as § 296-307-48015, filed 4/7/97, effective 4/7/97. Statutory Authority: RCW 49.17.040, [49.17.]050 and [49.17.]060. WSR 96-22-048, § 296-306A-48015, filed 10/31/96, effective 12/1/96.]

WAC 296-307-48017 How must cylinders be handled? (1) Cylinders must not be dropped or struck or permitted to strike each other violently.

(2) Cylinders must be handled carefully. Cylinders must not be subjected to rough handling, knocks, or falls that are liable to damage the cylinder, valve or safety devices and cause leakage.

(3) Cylinders must never be used as rollers or supports, whether full or empty.

[WSR 97-09-013, recodified as § 296-307-48017, filed 4/7/97, effective 4/7/97. Statutory Authority: RCW 49.17.040, [49.17.]050 and [49.17.]060. WSR 96-22-048, § 296-306A-48017, filed 10/31/96, effective 12/1/96.]

WAC 296-307-48019 What requirements apply to cylinder valves? (1) Cylinder valves must be closed before moving cylinders.

(2) Cylinder valves must be closed when work is finished.

(3) Valves of empty cylinders must be closed.

(4) A hammer or wrench must not be used to open cylinder valves. If valves cannot be opened by hand, the supplier must be notified.

(5) Cylinder valves must not be tampered with nor should any attempt be made to repair them. If you have trouble with a cylinder, you should send a report to the supplier indicating the character of the trouble and the cylinder's serial number. You must follow the supplier's instructions on what to do with the cylinder.

(6) Complete removal of the stem from a diaphragm-type cylinder valve must be avoided.

(7) If cylinders are found to have leaky valves or fittings that cannot be stopped by closing of the valve, the cylinders must be taken outdoors away from sources of ignition and slowly emptied.

(8) The cylinder valve must always be opened slowly.

(9) An acetylene cylinder valve must not be opened more than one and one-half turns of the spindle, and preferably no more than three-fourths of a turn.

[WSR 97-09-013, recodified as § 296-307-48019, filed 4/7/97, effective 4/7/97. Statutory Authority: RCW 49.17.040, [49.17.]050 and [49.17.]060. WSR 96-22-048, § 296-306A-48019, filed 10/31/96, effective 12/1/96.]

WAC 296-307-48021 What requirements apply to cylinder regulators? (1) Unless connected to a manifold, oxygen from a cylinder must first have an oxygen regulator attached to the cylinder valve.

(2) Before connecting a regulator to a cylinder valve, the valve must be opened slightly and closed immediately. The valve must be opened while standing to one side of the outlet; never in front of it. Fuel-gas cylinder valves must not be cracked near other welding work or near sparks, flame, or other possible sources of ignition.

(3) Before a regulator is removed from a cylinder valve, the cylinder valve must be closed and the gas released from the regulator.

(4) Fuel-gas must not be used from cylinders through torches or other devices equipped with shut-off valves without reducing the pressure through a suitable regulator attached to the cylinder valve or manifold.

[WSR 97-09-013, recodified as § 296-307-48021, filed 4/7/97, effective 4/7/97. Statutory Authority: RCW 49.17.040, [49.17.]050 and [49.17.]060. WSR 96-22-048, § 296-306A-48021, filed 10/31/96, effective 12/1/96.]

WAC 296-307-48023 What requirements apply to fuel-gas manifolds? (1) Manifolds must be approved either separately for each component part or as an assembled unit.

(2) Fuel-gas cylinders connected to one manifold inside a building must be limited to a maximum total capacity of 300 pounds of LP-gas or 3,000 cubic feet of other fuel-gas. More than one such manifold with connected cylinders may be located in the same room if the manifolds are at least 50 feet apart or separated by a noncombustible barrier at least 5 feet high having a fire-resistance rating of at least one-half hour.

(3) Exception: Fuel-gas cylinders connected to one manifold having an aggregate capacity exceeding 300 pounds of LP-gas or 3,000 cubic feet of other fuel-gas must be located outdoors, or in a separate building or room constructed according to 252 (a)(8) and (9) C.F.R.

(4) Separate manifold buildings or rooms may also be used for the storage of drums of calcium carbide and cylinders containing fuel gases as provided in WAC 296-307-48007. Such buildings or rooms must have no open flames for heating or lighting and must be well ventilated.

(5) High-pressure fuel-gas manifolds must have approved pressure regulating devices.

[Statutory Authority: RCW 49.17.040. WSR 98-24-096, § 296-307-48023, filed 12/1/98, effective 3/1/99. WSR 97-09-013, recodified as § 296-307-48023, filed 4/7/97, effective 4/7/97. Statutory Authority: RCW 49.17.040, [49.17.]050 and [49.17.]060. WSR 96-22-048, § 296-306A-48023, filed 10/31/96, effective 12/1/96.]

WAC 296-307-48025 What requirements apply to high pressure oxygen manifolds? This section applies to cylinders with a DOT service pressure above 200 psig.

(1) Manifolds must be approved either separately for each component or as an assembled unit.

(2) Oxygen manifolds must not be located in an acetylene generator room. Oxygen manifolds must be separated from fuel-gas cylinders or combustible materials (especially oil or grease), a minimum distance of 20 feet or by a noncombustible barrier at least 5 feet high having a fire-resistance rating of at least one-half hour.

(3) Oxygen cylinders connected to one manifold must be limited to a total gas capacity of 6,000 cubic feet. More than one such manifold with connected cylinders may be located in the same room if the manifolds are at least 50 feet apart or separated by a noncombustible barrier at least 5 feet high having a fire-resistance rating of at least one-half hour.

(4) Exception: An oxygen manifold, to which cylinders having an aggregate capacity of more than 6,000 cubic feet of oxygen are connected, should be located outdoors or in a separate noncombustible building. Such a manifold, if located inside a building having other occupancy, must be located in a separate room of noncombustible construction having a fire-resistance rating of at least one-half hour or in an area with no combustible material within 20 feet of the manifold.

(5) An oxygen manifold or oxygen bulk supply system that has storage capacity of more than 13,000 cubic feet of oxygen (measured at 14.7 psia and 70°F), connected in service or ready for service, or more than 25,000 cubic feet of oxygen (measured at 14.7 psia and 70°F), including unconnected reserves on hand at the site, must meet the requirements of the Standard for Bulk Oxygen Systems at Consumer Sites, NFPA No. 566-1965.

(6) High-pressure oxygen manifolds must have approved pressure-regulating devices.

[WSR 97-09-013, recodified as § 296-307-48025, filed 4/7/97, effective 4/7/97. Statutory Authority: RCW 49.17.040, [49.17.]050 and [49.17.]060. WSR 96-22-048, § 296-306A-48025, filed 10/31/96, effective 12/1/96.]

WAC 296-307-48027 What requirements apply to low pressure oxygen manifolds? This section applies to cylinders with a maximum DOT service pressure of 200 psig.

(1) Manifolds must be of substantial construction suitable for use with oxygen at a pressure of 250 psig. They must have a minimum bursting pressure of 1,000 psig and must be protected by a safety-relief device that will relieve at a maximum pressure of 500 psig.

Note: DOT-4L200 cylinders have safety devices that relieve at a maximum pressure of 250 psig (or 235 psig if vacuum insulation is used).

(2) Hose and hose connections subject to cylinder pressure must meet the requirements of WAC 296-307-48049. Hose must have a minimum bursting pressure of 1,000 psig.

(3) The assembled manifold including leads must be tested and proven gas-tight at a pressure of 300 psig. The fluid used for testing oxygen manifolds must be oil-free and not combustible.

(4) The location of manifolds must meet the requirements of WAC 296-307-48025.

(5) The following sign must be conspicuously posted at each manifold:

Low-Pressure Manifold
Do Not Connect High-Pressure Cylinders
Maximum Pressure—250 PSIG

[Statutory Authority: RCW 49.17.040. WSR 98-24-096, § 296-307-48027, filed 12/1/98, effective 3/1/99. WSR 97-09-013, recodified as § 296-307-48027, filed 4/7/97, effective 4/7/97. Statutory Authority: RCW 49.17.040, [49.17.]050 and [49.17.]060. WSR 96-22-048, § 296-306A-48027, filed 10/31/96, effective 12/1/96.]

WAC 296-307-48029 What requirements apply to manifolding portable outlet headers? (1) Portable outlet headers must not be used indoors except for temporary service where the conditions preclude a direct supply from outlets located on the service piping system.

(2) Each outlet on the service piping from which oxygen or fuel-gas is withdrawn to supply a portable outlet header must have a readily accessible shut-off valve.

(3) Hose and hose connections used for connecting the portable outlet header to the service piping must meet the requirements of WAC 296-307-48051.

(4) Master shut-off valves for both oxygen and fuel-gas must be provided at the entry end of the portable outlet header.

(5) Portable outlet headers for fuel-gas service must have an approved hydraulic back-pressure valve installed at the inlet and preceding the service outlets, unless an approved pressure-reducing regulator, an approved backflow check valve, or an approved hydraulic back-pressure valve is installed at each outlet. Outlets provided on headers for oxygen service may be fitted for use with pressure-reducing regulators or for direct hose connection.

(6) Each service outlet on portable outlet headers must have a valve assembly that includes a detachable outlet seal cap, chained or otherwise attached to the body of the valve.

(7) Materials and fabrication procedures for portable outlet headers must comply with WAC 296-307-48033, 296-307-48035, and 296-307-48041.

(8) Portable outlet headers must have frames that will support the equipment securely in the correct operating position and protect them from damage during handling and operation.

[Statutory Authority: RCW 49.17.040. WSR 98-24-096, § 296-307-48029, filed 12/1/98, effective 3/1/99. WSR 97-09-013, recodified as § 296-307-48029, filed 4/7/97, effective 4/7/97. Statutory Authority: RCW 49.17.040, [49.17.]050 and [49.17.]060. WSR 96-22-048, § 296-306A-48029, filed 10/31/96, effective 12/1/96.]

WAC 296-307-48031 What operating procedures apply to cylinder manifolds? (1) Cylinder manifolds must be installed under the supervision of someone familiar with the proper practices of construction and use.

(2) All component parts used in the methods of manifolding described in WAC 296-307-48023 must have the materials, design and construction approved either separately or as an assembled unit.

(3) All manifolds and parts used in methods of manifolding must be used only for the gas or gases for which they are approved.

(4) When acetylene cylinders are coupled, approved flash arresters must be installed between each cylinder and the coupler block. For outdoor use only, and when the number of cylinders coupled does not exceed three, one flash arrester installed between the coupler block and regulator is acceptable.

(5) Each fuel-gas cylinder lead should have a backflow check valve.

(6) The maximum aggregate capacity of fuel-gas cylinders connected to a portable manifold inside a building must be 3,000 cubic feet of gas.

(7) Acetylene and liquefied fuel-gas cylinders must be manifolded vertically.

(8) The pressure in the gas cylinders connected to and discharged simultaneously through a common manifold must be approximately equal.

[Statutory Authority: RCW 49.17.040. WSR 98-24-096, § 296-307-48031, filed 12/1/98, effective 3/1/99. WSR 97-09-013, recodified as § 296-307-48031, filed 4/7/97, effective 4/7/97. Statutory Authority: RCW 49.17.040, [49.17.]050 and [49.17.]060. WSR 96-22-048, § 296-306A-48031, filed 10/31/96, effective 12/1/96.]

WAC 296-307-48033 How must service piping systems be designed? (1) Piping and fittings must comply with Section 2, Industrial Gas and Air Piping Systems, of the American National Standard Code for Pressure Piping, ANSI B 31.1-1967, if they do not conflict with subsections (2) and (3) of this section.

(2) Pipe must be at least Schedule 40 and fittings must be at least standard weight in sizes up to and including 6-inch nominal.

(3) Copper tubing must be Types K or L according to the Standard Specification for Seamless Copper Water Tube, ASTM B88-66a.

(4) Piping must be steel, wrought iron, brass or copper pipe, or seamless copper, brass or stainless steel tubing, except as provided in subsections (5) through (9) of this section.

(5) Oxygen piping and fittings at pressures in excess of 700 psig, must be stainless steel or copper alloys.

(6) Hose connections and hose complying with WAC 296-307-48051 may be used to connect the outlet of a manifold pressure regulator to piping if the working pressure of

the piping is 250 psig or less and the length of the hose is a maximum of 5 feet. Hose must have a minimum bursting pressure of 1,000 psig.

(7) When oxygen is supplied to a service piping system from a low-pressure oxygen manifold without an intervening pressure regulating device, the piping system must have a minimum design pressure of 250 psig. A pressure regulating device must be used at each station outlet when the connected equipment is for use at pressures less than 250 psig.

(8) Piping for acetylene or acetylenic compounds must be steel or wrought iron.

(9) Unalloyed copper must only be used for acetylene or acetylenic compounds in listed equipment.

[Statutory Authority: RCW 49.17.040. WSR 98-24-096, § 296-307-48033, filed 12/1/98, effective 3/1/99. WSR 97-09-013, recodified as § 296-307-48033, filed 4/7/97, effective 4/7/97. Statutory Authority: RCW 49.17.040, [49.17.]050 and [49.17.]060. WSR 96-22-048, § 296-306A-48033, filed 10/31/96, effective 12/1/96.]

WAC 296-307-48035 What requirements apply to piping joints? (1) Joints in steel or wrought iron piping must be welded, threaded or flanged. Fittings, such as ells, tees, couplings, and unions, must be rolled, forged or cast steel, malleable iron or nodular iron. Gray or white cast iron fittings are prohibited.

(2) Joints in brass or copper pipe must be welded, brazed, threaded, or flanged. Socket type joints must be brazed with silver-brazing alloy or similar high melting point (not less than 800°F) filler metal.

(3) Joints in seamless copper, brass, or stainless steel tubing must be approved gas tubing fittings or the joints must be brazed. Socket type joints must be brazed with silver-brazing alloy or similar high melting point (not less than 800°F) filler metal.

[WSR 97-09-013, recodified as § 296-307-48035, filed 4/7/97, effective 4/7/97. Statutory Authority: RCW 49.17.040, [49.17.]050 and [49.17.]060. WSR 96-22-048, § 296-306A-48035, filed 10/31/96, effective 12/1/96.]

WAC 296-307-48037 How must service piping systems be installed? (1) Distribution lines must be installed and maintained in a safe operating condition.

(2) Piping may be above or below ground. All piping must be run as directly as practical, protected against physical damage, with an allowance for expansion and contraction, jarring and vibration. Pipe laid underground in earth must be below the frost line and protected against corrosion. After assembly, piping must be thoroughly blown out with air or nitrogen to remove foreign materials. For oxygen piping, only oil-free air, oil-free nitrogen, or oil-free carbon dioxide must be used.

(3) Only piping that has been welded or brazed must be installed in tunnels, trenches or ducts. Shut-off valves must be located outside such conduits. Oxygen piping may be placed in the same tunnel, trench or duct with fuel-gas pipelines, if there is good natural or forced ventilation.

(4) Low points in piping carrying moist gas must be drained into drip pots constructed to permit pumping or draining out the condensate at necessary intervals. Drain valves must be installed for this purpose having outlets normally closed with screw caps or plugs. Open end valves or petcocks are prohibited, except that in drips located outdoors, underground, and not readily accessible, valves may be used at such points if they have means to secure them in the closed position. Pipes leading to the surface of the ground must be cased or jacketed where necessary to prevent loosening or breaking.

(5) Gas cocks or valves must be provided for all buildings at points where they will be readily accessible for shutting off the gas supply to these buildings in any emergency. Underground valve boxes or manholes should be avoided wherever possible. There must be a shut-off valve in the discharge line from the generator, gas holder, manifold or other source of supply.

(6) Shut-off valves must not be installed in safety-relief lines in such a manner that the safety-relief device can be rendered ineffective.

(7) Fittings and lengths of pipe must be examined internally before assembly and, if necessary, freed from scale or dirt. Oxygen piping and fittings must be washed out with a suitable solution that will effectively remove grease and dirt but will not react with oxygen.

Note: Hot water solutions of caustic soda or trisodium phosphate are effective for this purpose.

(8) Piping must be thoroughly blown out after assembly to remove foreign materials. For oxygen piping, oil-free air, oil-free nitrogen, or oil-free carbon dioxide must be used. For other piping, air or inert gas may be used.

(9) When flammable gas lines or other parts of equipment are being purged of air or gas, open lights or other sources of ignition are prohibited near uncapped openings.

(10) No welding or cutting must be performed on an acetylene or oxygen pipeline, including the attachment of hangers or supports, until the line has been purged. Only oil-free air, oil-free nitrogen, or oil-free carbon dioxide must be used to purge oxygen lines.

[WSR 97-09-013, recodified as § 296-307-48037, filed 4/7/97, effective 4/7/97. Statutory Authority: RCW 49.17.040, [49.17.]050 and [49.17.]060. WSR 96-22-048, § 296-306A-48037, filed 10/31/96, effective 12/1/96.]

WAC 296-307-48039 How must service piping systems be painted and marked? (1) Underground pipe and tubing and outdoor ferrous pipe and tubing must be covered or painted with a suitable material for protection against corrosion.

(2) Aboveground piping systems must be marked according to the American National Standard Scheme for the Identification of Piping Systems, ANSI A 13.1-1956.

(3) Station outlets must be marked to indicate the name of the gas.

[WSR 97-09-013, recodified as § 296-307-48039, filed 4/7/97, effective 4/7/97. Statutory Authority: RCW 49.17.040, [49.17.]050 and [49.17.]060. WSR 96-22-048, § 296-306A-48039, filed 10/31/96, effective 12/1/96.]

WAC 296-307-48041 How must service piping systems be tested? (1) Piping systems must be tested and proved gastight at 1-1/2 times the maximum operating pressure, and must be thoroughly purged of air before being placed in service. The material used for testing oxygen lines must be oil free and noncombustible. Flames must not be used to detect leaks.

(2) When flammable gas lines or other parts of equipment are being purged of air or gas, sources of ignition are prohibited near uncapped openings.

[WSR 97-09-013, recodified as § 296-307-48041, filed 4/7/97, effective 4/7/97. Statutory Authority: RCW 49.17.040, [49.17.]050 and [49.17.]060. WSR 96-22-048, § 296-306A-48041, filed 10/31/96, effective 12/1/96.]

WAC 296-307-48043 How must equipment be installed? Equipment shall be installed and used only in the service for which it is approved and as recommended by the manufacturer.

[WSR 97-09-013, recodified as § 296-307-48043, filed 4/7/97, effective 4/7/97. Statutory Authority: RCW 49.17.040, [49.17.]050 and [49.17.]060. WSR 96-22-048, § 296-306A-48043, filed 10/31/96, effective 12/1/96.]

WAC 296-307-48045 How must service piping systems be protected? Service piping systems must be protected by pressure relief devices set to function at not more than the design pressure of the systems and discharging upwards to a safe location.

[WSR 97-09-013, recodified as § 296-307-48045, filed 4/7/97, effective 4/7/97. Statutory Authority: RCW 49.17.040, [49.17.]050 and [49.17.]060. WSR 96-22-048, § 296-306A-48045, filed 10/31/96, effective 12/1/96.]

WAC 296-307-48047 What requirements apply to piping protective equipment? (1) The fuel-gas and oxygen piping systems, including portable outlet headers must incorporate the protective equipment shown in Figures V-1, V-2, and V-3.

When only a portion of a fuel-gas system is to be used with oxygen, only that portion must meet this requirement.

(2) Approved protective equipment (designated PF in Figs. V-1, V-2, and V-3) must be installed in fuel-gas piping to prevent:

(a) Backflow of oxygen into the fuel-gas supply system;

(b) Passage of a flash back into the fuel-gas supply system; and

(c) Excessive back pressure of oxygen in the fuel-gas supply system. The three functions of the protective equipment may be combined in one device or may be provided by separate devices.

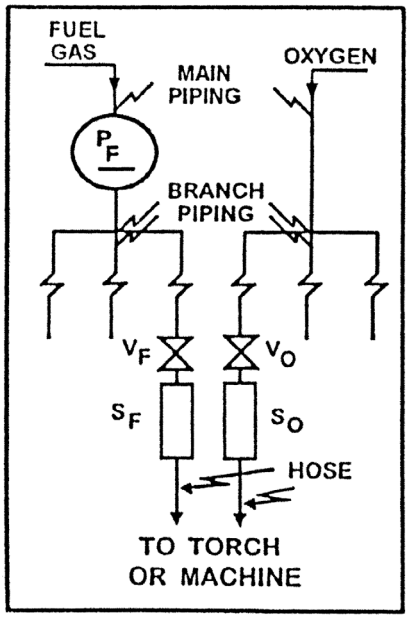

Fig. 1

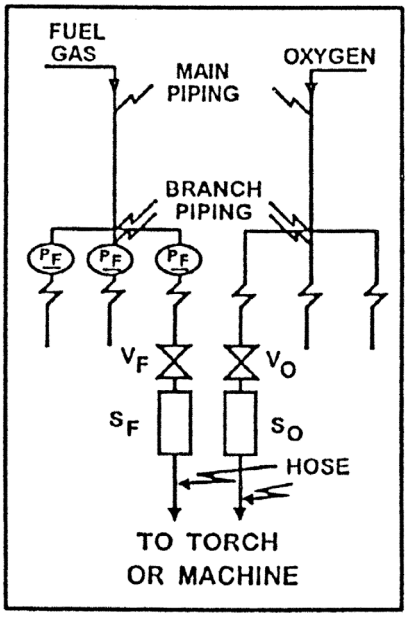

Fig. 2

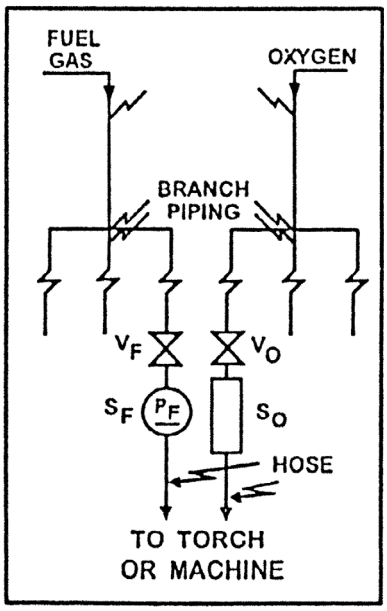

Fig. 3

PF = Protective equipment in fuel-gas piping
VF = Fuel-gas station outlet valve
VO = Oxygen station outlet valve
SF = Backflow prevention device(s) at fuel-gas station outlet
SO = Backflow prevention device(s) at oxygen station outlet

(3) The protective equipment must be located in the main supply line, as in Figure 1 or at the head of each branch line, as in Figure 2 or at each location where fuel-gas is withdrawn, as in Figure 3. Where branch lines are of 2-inch pipe size or larger or of substantial length, protective equipment (designated as PF) shall be located as shown in either 2 or 3.

(4) Backflow protection must be provided by an approved device that will prevent oxygen from flowing into the fuel-gas system or fuel from flowing into the oxygen system (see SF, Figs. 1 and 2).

(5) Flash-back protection must be provided by an approved device that will prevent flame from passing into the fuel-gas system.

(6) Back-pressure protection must be provided by an approved pressure-relief device set at a pressure not greater than the pressure rating of the backflow or the flashback protection device, whichever is lower. The pressure-relief device

must be located on the downstream side of the backflow and flashback protection devices. The vent from the pressure-relief device must be at least as large as the relief device inlet and must be installed without low points that may collect moisture. If low points are unavoidable, drip pots with drains closed with screw plugs or caps shall be installed at the low points. The vent terminus must not endanger personnel or property through gas discharge; must be located away from ignition sources; and must terminate in a hood or bend.

(7) If pipeline protective equipment incorporates a liquid, the liquid level must be maintained, and a suitable anti-freeze may be used to prevent freezing.

(8) Fuel-gas for use with equipment not requiring oxygen must be withdrawn upstream of the piping protective devices.

[WSR 97-09-013, recodified as § 296-307-48047, filed 4/7/97, effective 4/7/97. Statutory Authority: RCW 49.17.040, [49.17.]050 and [49.17.]060. WSR 96-22-048, § 296-306A-48047, filed 10/31/96, effective 12/1/96.]

WAC 296-307-48049 What requirements apply to station outlet protective equipment? (1) A check valve pressure regulator, hydraulic seal, or combination of these devices must be provided at each station outlet, including those on portable headers, to prevent backflow, as shown in Figures 1, 2, and 3 and designated as SF and SO.

(2) When approved pipeline protective equipment (designated PF) is located at the station outlet as in Figure 3, no additional check valve, pressure regulator, or hydraulic seal is required.

(3) Each station outlet must have a shut-off valve (designated VF and VO) installed on the upstream side of other station outlet equipment.

(4) If the station outlet is equipped with a detachable regulator, the outlet must terminate in a union connection that meets the requirements of the Regulator Connection Standards, 1958, Compressed Gas Association.

(5) If the station outlet is connected directly to a hose, the outlet must terminate in a union connection that meets the requirements of the Standard Hose Connection Specifications, 1957, Compressed Gas Association.

(6) Station outlets may terminate in pipe threads to which permanent connections are to be made, such as to a machine.

(7) Station outlets must have a detachable outlet seal cap secured in place. This cap must be used to seal the outlet except when a hose, a regulator, or piping is attached.

(8) Where station outlets are equipped with approved backflow and flashback protective devices, as many as four torches may be supplied from one station outlet through rigid piping, if each outlet from such piping, is equipped with a shut-off valve and if the fuel-gas capacity of any one torch does not exceed 15 cubic feet per hour. This rule does not apply to machines.

[WSR 97-09-013, recodified as § 296-307-48049, filed 4/7/97, effective 4/7/97. Statutory Authority: RCW 49.17.040, [49.17.]050 and [49.17.]060. WSR 96-22-048, § 296-306A-48049, filed 10/31/96, effective 12/1/96.]

WAC 296-307-48051 What requirements apply to hose and hose connections? (1) Hose for oxy-fuel gas service must meet the requirements of the Specification for Rubber Welding Hose, 1958, Compressed Gas Association and Rubber Manufacturers Association.

(2) The generally recognized colors are red for acetylene and other fuel-gas hose, green for oxygen hose, and black for inert-gas and air hose.

(3) When parallel lengths of oxygen and acetylene hose are taped together for convenience and to prevent tangling, a maximum of 4 inches out of 12 inches must be covered by tape.

(4) Hose connections must meet the requirements of the Standard Hose Connection Specifications, 1957, Compressed Gas Association.

(5) Hose connections must be clamped or otherwise securely fastened so they will withstand, without leakage, twice the pressure to which they are normally subjected in service, but never less than a pressure of 300 psi. Oil-free air or an oil-free inert gas must be used for the test.

(6) Hose showing leaks, burns, worn places, or other defects rendering it unfit for service must be repaired or replaced.

[WSR 97-09-013, recodified as § 296-307-48051, filed 4/7/97, effective 4/7/97. Statutory Authority: RCW 49.17.040, [49.17.]050 and [49.17.]060. WSR 96-22-048, § 296-306A-48051, filed 10/31/96, effective 12/1/96.]

WAC 296-307-48053 What requirements apply to pressure-reducing regulators? (1) Pressure-reducing regulators must be used only for the gas and pressures for which they are intended. The regulator inlet connections must meet the requirements of the Regulator Connection Standards, 1958, Compressed Gas Association.

(2) When regulators or parts of regulators, including gauges, need repair, the work must be performed by skilled mechanics who have been properly instructed.

(3) Gauges on oxygen regulators must be marked "USE NO OIL."

(4) Union nuts and connections on regulators must be inspected before use to detect faulty seats that may cause leakage of gas when the regulators are attached to the cylinder valves. Damaged nuts or connections must be destroyed.

[WSR 97-09-013, recodified as § 296-307-48053, filed 4/7/97, effective 4/7/97. Statutory Authority: RCW 49.17.040, [49.17.]050 and [49.17.]060. WSR 96-22-048, § 296-306A-48053, filed 10/31/96, effective 12/1/96.]

WAC 296-307-485 Installation and operation of resistance welding equipment.

[WSR 97-09-013, recodified as § 296-307-485, filed 4/7/97, effective 4/7/97. Statutory Authority: RCW 49.17.040, [49.17.]050 and [49.17.]060. WSR 96-22-048, § 296-306A-485, filed 10/31/96, effective 12/1/96.]

WAC 296-307-48501 What general requirements apply to resistance welding equipment? (1) All equipment must be installed by a qualified electrician according to the requirements of chapter 296-307 WAC Part T. There must be a safety-type disconnecting switch or a circuit breaker or circuit interrupter to open each power circuit to the machine, conveniently located at or near the machine, so that the power can be shut off when the machine or its controls are to be serviced.

(2) Ignitron tubes used in resistance welding equipment must have a thermal protection switch.

(3) Employees designated to operate resistance welding equipment must have been properly instructed and judged competent to operate such equipment.

(4) Controls of all automatic or air and hydraulic clamps must be arranged or guarded to prevent the operator from accidentally activating them.

[Statutory Authority: RCW 49.17.040. WSR 98-24-096, § 296-307-48501, filed 12/1/98, effective 3/1/99. WSR 97-09-013, recodified as § 296-307-48501, filed 4/7/97, effective 4/7/97. Statutory Authority: RCW 49.17.040, [49.17.]050 and [49.17.]060. WSR 96-22-048, § 296-306A-48501, filed 10/31/96, effective 12/1/96.]

WAC 296-307-48503 What requirements apply to portable welding machines? (1) All portable welding guns must have suitable counter-balanced devices for supporting the guns, including cables, unless the design of the gun or fixture makes counterbalancing impractical or unnecessary.

(2) All portable welding guns, transformers, and related equipment that is suspended from overhead structures, eye beams, or trolleys must have safety chains or cables. Safety chains or cables shall be able to support the total shock load in the event of failure of any component of the supporting system.

(3) When trolleys are used to support portable welding equipment, they must have suitable forged steel clevis for the attachment of safety chains. Each clevis must be able to support the total shock load of the suspended equipment in the event of trolley failure.

(4) All initiating switches, including retraction and dual schedule switches, located on the portable welding gun must have suitable guards able to prevent accidental initiation through contact with fixturing, operator's clothing, etc. Initiating switch voltage must be a maximum of 24 volts.

(5) The movable holder, where it enters the gun frame, must have enough clearance to prevent the shearing an operator's fingers if placed on the operating movable holder.

(6) The secondary and case of all portable welding transformers must be grounded. Secondary grounding may be by center tapped secondary or by a center tapped grounding reactor connected across the secondary.

[WSR 97-09-013, recodified as § 296-307-48503, filed 4/7/97, effective 4/7/97. Statutory Authority: RCW 49.17.040, [49.17.]050 and [49.17.]060. WSR 96-22-048, § 296-306A-48503, filed 10/31/96, effective 12/1/96.]

WAC 296-307-48505 What requirements apply to flash welding equipment? (1) Flash welding machines must have a hood to control flying flash. In cases of high production, where materials may contain a film of oil and where toxic elements and metal fumes are given off, ventilation must be provided according to WAC 296-307-50009 through 296-307-50029.

(2) For the protection of the operators of nearby equipment, fire-resistant curtains or suitable shields must be set up around the machine and in such a manner that the operator's movements are not hampered.

(3) If the welding process cannot be isolated, anyone who may be exposed to the hazard of arc flash must be properly protected.

[Statutory Authority: RCW 49.17.040. WSR 98-24-096, § 296-307-48505, filed 12/1/98, effective 3/1/99. WSR 97-09-013, recodified as § 296-307-48505, filed 4/7/97, effective 4/7/97. Statutory Authority: RCW 49.17.040, [49.17.]050 and [49.17.]060. WSR 96-22-048, § 296-306A-48505, filed 10/31/96, effective 12/1/96.]

WAC 296-307-48507 Who must perform a job hazard analysis? A qualified person must perform a job hazard analysis on the operations to be performed on each welding machine to determine the safeguards and personal protective equipment that shall be used for each job.

[WSR 97-09-013, recodified as § 296-307-48507, filed 4/7/97, effective 4/7/97. Statutory Authority: RCW 49.17.040, [49.17.]050 and [49.17.]060. WSR 96-22-048, § 296-306A-48507, filed 10/31/96, effective 12/1/96.]

WAC 296-307-48509 What maintenance requirements apply to resistance welding equipment? Qualified maintenance personnel must periodically inspect the equipment and maintain records of the inspections. The operator must be instructed to report any equipment defects to the supervisor and the use of the equipment must be discontinued until safety repairs have been completed.

[WSR 97-09-013, recodified as § 296-307-48509, filed 4/7/97, effective 4/7/97. Statutory Authority: RCW 49.17.040, [49.17.]050 and [49.17.]060. WSR 96-22-048, § 296-306A-48509, filed 10/31/96, effective 12/1/96.]

WAC 296-307-490 Application, installation, and operation of arc welding and cutting equipment.

[WSR 97-09-013, recodified as § 296-307-490, filed 4/7/97, effective 4/7/97. Statutory Authority: RCW 49.17.040, [49.17.]050 and [49.17.]060. WSR 96-22-048, § 296-306A-490, filed 10/31/96, effective 12/1/96.]

WAC 296-307-49001 What environmental conditions must be taken into account when selecting arc welding equipment?

Note: You may ensure that your equipment is designed for safety by choosing equipment that complies with the Requirements for Electric Arc-Welding Apparatus, NEMA EW-1-1962, National Electrical Manufacturers Association or the Safety Standard for Transformer-Type Arc-Welding Machines, ANSI C33.2-1956, Underwriters' Laboratories.

(1) Standard machines for arc welding service must be designed and constructed to carry their rated load with rated temperature rises where the temperature of the cooling air is a maximum of 40°C (104°F) and where the altitude is a maximum of 3,300 feet, and must be suitable for operation in atmospheres containing gases, dust, and light rays produced by the welding arc.

(2) When exposed to the following or other conditions, machines must be designed to safely meet the requirements of the service.

- Unusually corrosive fumes;
- Steam or excessive humidity;
- Excessive oil vapor;
- Flammable gases;
- Abnormal vibration or shock;
- Excessive dust;
- Weather;
- Unusual seacoast or shipboard conditions.

[WSR 97-09-013, recodified as § 296-307-49001, filed 4/7/97, effective 4/7/97. Statutory Authority: RCW 49.17.040, [49.17.]050 and [49.17.]060. WSR 96-22-048, § 296-306A-49001, filed 10/31/96, effective 12/1/96.]

WAC 296-307-49003 What voltages must arc welding equipment use? Open circuit (no load) voltages of arc

welding and cutting machines should be as low as possible consistent with satisfactory welding or cutting being done. Following are the maximum limits:

(1) For alternating-current machines:

(a) Manual arc welding and cutting—80 volts.

(b) Automatic (machine or mechanized) arc welding and cutting—100 volts.

(2) For direct-current machines:

(a) Manual arc welding and cutting—100 volts.

(b) Automatic (machine or mechanized) arc welding and cutting—100 volts.

(3) When special welding and cutting processes require values of open circuit voltages higher than the above, means must be provided to prevent the operator from making accidental contact with the high voltage by adequate insulation or other means.

Note: For a.c. welding under wet conditions or warm surroundings where perspiration is a factor, the use of reliable automatic controls for reducing no load voltage is recommended to reduce the shock hazard.

[WSR 97-09-013, recodified as § 296-307-49003, filed 4/7/97, effective 4/7/97. Statutory Authority: RCW 49.17.040, [49.17.]050 and [49.17.]060. WSR 96-22-048, § 296-306A-49003, filed 10/31/96, effective 12/1/96.]

WAC 296-307-49005 How must arc welding equipment be designed? (1) A controller integrally mounted in an electric motor driven welder must be able to carry the rated motor current, must be able to make and interrupt stalled rotor current of the motor, and may serve as the running overcurrent device if provided with the number of over-current units as specified by chapter 296-307 WAC Part T. Starters with magnetic undervoltage release should be used with machines installed more than one to a circuit to prevent circuit overload caused by simultaneously starting several motors upon return of voltage.

(2) On all types of arc welding machines, control apparatus must be enclosed except for the operating wheels, levers, or handles.

Note: Control handles and wheels should be large enough to be easily grasped by a gloved hand.

(3) Input power terminals, tap change devices, and live metal parts connected to input circuits must be completely enclosed and accessible only by tools.

(4) Terminals for welding leads should be protected from accidental electrical contact by employees or by metal objects i.e., vehicles, crane hooks, etc. You may provide protection with:

- Dead-front receptacles for plug connections;
- Recessed openings with nonremovable hinged covers;
- Heavy insulating sleeving or taping; or
- Other equivalent electrical and mechanical protection.

If a welding lead terminal that is intended to be used exclusively for connection to the work is connected to the grounded enclosure, it must be done by a conductor at least two AWG sizes smaller than the grounding conductor and the terminal must be marked to indicate that it is grounded.

(5) No connections for portable control devices (such as push buttons to be carried by the operator) must be connected to an a.c. circuit of higher than 120 volts. Exposed metal parts of portable control devices operating on circuits above 50 volts must be grounded by a grounding conductor in the control cable.

(6) Auto transformers or a.c. reactors must not be used to draw welding current directly from any a.c. power source having a voltage exceeding 80 volts.

[Statutory Authority: RCW 49.17.040. WSR 98-24-096, § 296-307-49005, filed 12/1/98, effective 3/1/99. WSR 97-09-013, recodified as § 296-307-49005, filed 4/7/97, effective 4/7/97. Statutory Authority: RCW 49.17.040, [49.17.]050 and [49.17.]060. WSR 96-22-048, § 296-306A-49005, filed 10/31/96, effective 12/1/96.]

WAC 296-307-49007 How must arc welding equipment be installed? Arc welding equipment, including the power supply, must be installed according to the requirements of chapter 296-307 WAC Part T.

[Statutory Authority: RCW 49.17.040. WSR 98-24-096, § 296-307-49007, filed 12/1/98, effective 3/1/99. WSR 97-09-013, recodified as § 296-307-49007, filed 4/7/97, effective 4/7/97. Statutory Authority: RCW 49.17.040, [49.17.]050 and [49.17.]060. WSR 96-22-048, § 296-306A-49007, filed 10/31/96, effective 12/1/96.]

WAC 296-307-49009 How must arc welding equipment be grounded? (1) The frame or case of the welding machine (except engine-driven machines) must be grounded according to the requirements of chapter 296-307 WAC Part T.

(2) Conduits containing electrical conductors must not be used for completing a work-lead circuit. Pipelines must not be used as a permanent part of a work-lead circuit, but may be used during construction, extension or repair if current is not carried through threaded joints, flanged bolted joints, or caulked joints and special precautions are used to avoid sparking at connection of the work-lead cable.

(3) Using chains, wire ropes, cranes, hoists, and elevators to carry welding current is prohibited.

(4) Where a structure, conveyor, or fixture is regularly used as a welding current return circuit, joints must be bonded or provided with adequate current collecting devices and appropriate periodic inspection should be conducted to ensure that no electrocution, shock, or fire hazard exists.

(5) All ground connections must be checked to determine that they are mechanically strong and electrically adequate for the required current.

[Statutory Authority: RCW 49.17.040. WSR 98-24-096, § 296-307-49009, filed 12/1/98, effective 3/1/99. WSR 97-09-013, recodified as § 296-307-49009, filed 4/7/97, effective 4/7/97. Statutory Authority: RCW 49.17.040, [49.17.]050 and [49.17.]060. WSR 96-22-048, § 296-306A-49009, filed 10/31/96, effective 12/1/96.]

WAC 296-307-49011 What requirements apply to supply connections and conductors? (1) A disconnecting switch or controller must be provided at or near each welding machine without a switch or controller mounted as an integral part of the machine. The switch must meet the requirements of chapter 296-307 WAC Part T. Overcurrent protection must be provided as specified in chapter 296-307 WAC Part T. A disconnect switch with overload protection or equivalent disconnect and protection means, permitted by chapter 296-307 WAC Part T must be provided for each outlet intended for connection to a portable welding machine.

(2) For individual welding machines, the rated current-carrying capacity of the supply conductors must be at least that of the rated primary current of the welding machines.

(3) For groups of welding machines, the rated current-carrying capacity of conductors may be less than the sum of the rated primary currents of the welding machines supplied. The conductor rating must be determined according to the machine loading based on the use to be made of each welding machine and the allowance permissible in the event that all the welding machines supplied by the conductors will not be in use at the same time.

(4) In operations involving several welders on one structure, d.c. welding process requirements may require the use of both polarities; or supply circuit limitations for a.c. welding may require distribution of machines among the phases of the supply circuit. In such cases, no load voltages between electrode holders will be two times normal in d.c. or 1, 1.4, 1.73, or 2 times normal on a.c. machines. Similar voltage differences will exist if both a.c. and d.c. welding are done on the same structure.

(a) All d.c. machines must be connected with the same polarity.

(b) All a.c. machines must be connected to the same phase of the supply circuit and with the same instantaneous polarity.

[Statutory Authority: RCW 49.17.040. WSR 98-24-096, § 296-307-49011, filed 12/1/98, effective 3/1/99. WSR 97-09-013, recodified as § 296-307-49011, filed 4/7/97, effective 4/7/97. Statutory Authority: RCW 49.17.040, [49.17.]050 and [49.17.]060. WSR 96-22-048, § 296-306A-49011, filed 10/31/96, effective 12/1/96.]

WAC 296-307-49013 How must arc welding equipment be operated? (1) Employees assigned to operate or maintain arc welding equipment must be acquainted with the requirements of WAC 296-307-490, 296-307-495, and 296-307-500; if doing gas-shielded arc welding, also Recommended Safe Practices for Gas-Shielded Arc Welding, A6.1-1966, American Welding Society.

(2) Before starting operations, all connections to the machine must be checked to make certain they are properly made. The work lead must be firmly attached to the work; magnetic work clamps shall be freed from adherent metal particles of spatter on contact surfaces. Coiled welding cable must be spread out before use to avoid serious overheating and damage to insulation.

(3) You must ensure that the welding machine frame grounding is checked with special attention given to safety ground connections of portable machines.

(4) Cylinders must be kept away from radiators, piping systems, layout tables, etc., that may be used for grounding electric circuits. Any practice such as the tapping of an electrode against a cylinder to strike an arc is prohibited.

(5) There must be no leaks of cooling water, shielding gas or engine fuel.

(6) You must ensure that the machine has proper switching equipment for shutting down.

(7) Printed rules and instructions covering operation of equipment supplied by the manufacturers must be strictly followed.

(8) Electrode holders when not in use must be placed so that they cannot make electrical contact with persons, conducting objects, fuel or compressed gas tanks.

(9) Cables with splices within 10 feet of the holder are prohibited. The welder should not coil or loop welding electrode cable around parts of the body.

[Statutory Authority: RCW 49.17.040. WSR 98-24-096, § 296-307-49013, filed 12/1/98, effective 3/1/99. WSR 97-09-013, recodified as § 296-307-49013, filed 4/7/97, effective 4/7/97. Statutory Authority: RCW 49.17.040, [49.17.]050 and [49.17.]060. WSR 96-22-048, § 296-306A-49013, filed 10/31/96, effective 12/1/96.]

WAC 296-307-49015 How must arc welding equipment be maintained? (1) The operator should report any equipment defect or safety hazard to the supervisor and discontinue using the equipment until its safety is ensured. Repairs must be made only by qualified persons.

(2) Machines that have become wet must be thoroughly dried and tested before being used.

(3) Work and electrode lead cables should be frequently inspected for wear and damage. Cables with damaged insulation or exposed bare conductors must be replaced. Lengths of work and electrode cables must be joined by connecting means specifically intended for the purpose. The connecting means must have insulation adequate for the service conditions.

[WSR 97-09-013, recodified as § 296-307-49015, filed 4/7/97, effective 4/7/97. Statutory Authority: RCW 49.17.040, [49.17.]050 and [49.17.]060. WSR 96-22-048, § 296-306A-49015, filed 10/31/96, effective 12/1/96.]

WAC 296-307-495 Fire prevention and protection.

[WSR 97-09-013, recodified as § 296-307-495, filed 4/7/97, effective 4/7/97. Statutory Authority: RCW 49.17.040, [49.17.]050 and [49.17.]060. WSR 96-22-048, § 296-306A-495, filed 10/31/96, effective 12/1/96.]

WAC 296-307-49501 What basic fire prevention precautions must be taken? For more information on these basic precautions and the special precautions of WAC 296-307-49503, including fire protection and prevention responsibilities of welders, cutters, their supervisors (including outside contractors), and management, see the Standard for Fire Prevention in Use of Cutting and Welding Processes, NFPA Standard 51B, 1962.

The basic precautions for fire prevention in welding or cutting work are:

(1) If the object to be welded or cut cannot readily be moved, all movable fire hazards in the vicinity must be taken to a safe place.

(2) If the object to be welded or cut cannot be moved and if all the fire hazards cannot be removed, then guards must be used to confine the heat, sparks, and slag, and to protect the fire hazards.

(3) If the requirements of this section cannot be met, then welding and cutting are prohibited.

[Statutory Authority: RCW 49.17.040. WSR 98-24-096, § 296-307-49501, filed 12/1/98, effective 3/1/99. WSR 97-09-013, recodified as § 296-307-49501, filed 4/7/97, effective 4/7/97. Statutory Authority: RCW 49.17.040, [49.17.]050 and [49.17.]060. WSR 96-22-048, § 296-306A-49501, filed 10/31/96, effective 12/1/96.]

WAC 296-307-49503 What special fire prevention precautions must be taken? When the nature of the work to be performed falls within the scope of WAC 296-307-49501(2), certain additional precautions may be necessary:

(1) Wherever there are floor openings or cracks in the flooring that cannot be closed, precautions must be taken so that no readily combustible materials on the floor below will be exposed to sparks that drop through. The same precautions must be observed with regard to cracks or holes in walls, open doorways, and open or broken windows.

(2) Suitable fire extinguishing equipment must be maintained in a state of readiness for instant use. Such equipment may consist of pails of water, buckets of sand, hose, or portable extinguishers depending upon the nature and quantity of the combustible material exposed.

(3) The following requirements apply to fire watch:

(a) Fire watchers are required whenever welding or cutting is performed in locations where other than a minor fire might develop, or any of the following conditions exist:

(i) Appreciable combustible material, in building construction or contents, closer than 35 feet to the point of operation.

(ii) Appreciable combustibles are more than 35 feet away but are easily ignited by sparks.

(iii) Wall or floor openings within a 35-foot radius expose combustible material in adjacent areas including concealed spaces in walls or floors.

(iv) Combustible materials are adjacent to the opposite side of metal partitions, walls, ceilings, or roofs and are likely to be ignited by conduction or radiation.

(b) Fire watchers must have fire extinguishing equipment readily available and be trained in its use. They must be familiar with facilities for sounding an alarm in the event of a fire. They must watch for fires in all exposed areas, try to extinguish them only when obviously within the capacity of the equipment available, or otherwise sound the alarm. A fire watch must be maintained for at least a half hour after completion of welding or cutting operations to detect and extinguish possible smoldering fires.

(4) Before cutting or welding is permitted, the area must be inspected by the individual responsible for authorizing cutting and welding operations. The responsible individual must designate precautions to be followed in granting authorization to proceed, preferably in the form of a written permit.

(5) Where combustible materials such as paper clippings, wood shavings, or textile fibers are on the floor, the floor must be swept clean for a radius of 35 feet. Combustible floors must be kept wet, covered with damp sand, or protected by fire-resistant shields. Where floors have been wet down, employees operating arc welding or cutting equipment must be protected from possible shock.

(6) Cutting and welding are prohibited in the following situations:

(a) In areas not authorized by management.

(b) In sprinklered buildings while such protection is impaired.

(c) In the presence of explosive atmospheres (mixtures of flammable gases, vapors, liquids, or dusts with air), or where explosive atmospheres may develop inside uncleaned or improperly prepared tanks or equipment that have previously contained such materials, or that may develop in areas with an accumulation of combustible dusts.

(d) In areas near the storage of large quantities of exposed, readily ignitable materials such as bulk sulphur, baled paper, or cotton.

(7) Where practical, all combustibles must be relocated at least 35 feet from the worksite. Where relocation is impractical, combustibles must be protected with flame-proofed covers or otherwise shielded with metal or asbestos guards or curtains. Edges of covers at the floor should be tight to prevent sparks from going under them. This precaution is also important at overlaps where several covers are used to protect a large pile.

(8) Ducts and conveyor systems that might carry sparks to distant combustibles must be suitably protected or shut down.

(9) Where cutting or welding is done near walls, partitions, ceiling, or roof of combustible construction, fire-resistant shields or guards must be provided to prevent ignition.

(10) If welding is to be done on a metal wall, partition, ceiling, or roof, precautions must be taken to prevent ignition of combustibles on the other side, due to conduction or radiation, preferably by relocating combustibles. Where combustibles are not relocated, a fire watch on the opposite side from the work must be provided.

(11) Welding must not be attempted on a metal partition, wall, ceiling, or roof having a combustible covering nor on walls or partitions of combustible sandwich-type panel construction.

(12) Cutting or welding on pipes or other metal in contact with combustible walls, partitions, ceilings or roofs must not be undertaken if the work is close enough to cause ignition by conduction.

(13) You are responsible for the safe use of cutting and welding equipment on your property and:

(a) Based on fire potentials of plant facilities, you must establish areas and procedures for cutting and welding;

(b) You must designate an individual responsible for authorizing cutting and welding operations in areas not specifically designed for such processes;

(c) You must insist that cutters or welders and their supervisors are suitably trained in the safe operation of their equipment and the safe use of the process; and

(d) You must advise all contractors about flammable materials or hazardous conditions of which they may not be aware.

(14) The supervisor must:

(a) Ensure that cutting and welding equipment is handled and used safely.

(b) Determine the combustible materials and hazardous areas present or likely to be present in the work location.

(c) Protect combustibles from ignition by the following:

(i) Have the work moved to a location free from dangerous combustibles;

(ii) If the work cannot be moved, have the combustibles moved to a safe distance from the work or have the combustibles properly shielded against ignition; and

(iii) See that cutting and welding are so scheduled that plant operations that might expose combustibles to ignition are not started during cutting or welding.

(d) Secure authorization for the cutting or welding operations from the designated management representative.

(e) Determine that the cutter or welder secures their approval that conditions are safe before going ahead;

(f) Determine that fire protection and extinguishing equipment are properly located at the site; and

(g) Ensure fire watches are available at the site when required.

(15) Cutting or welding is permitted only in areas that are or have been made fire safe. Within the confines of an operating plant or building, cutting and welding should preferably be done in a specific area designed for such work, such as a maintenance shop or a detached outside location. Such areas should be of noncombustible or fire-resistive construction, essentially free of combustible and flammable contents, and suitably segregated from adjacent areas. When work cannot be moved practically, as in most construction work, the area must be made safe by removing combustibles or protecting combustibles from ignition sources.

[Statutory Authority: RCW 49.17.040. WSR 98-24-096, § 296-307-49503, filed 12/1/98, effective 3/1/99. WSR 97-09-013, recodified as § 296-307-49503, filed 4/7/97, effective 4/7/97. Statutory Authority: RCW 49.17.040, [49.17.]050 and [49.17.]060. WSR 96-22-048, § 296-306A-49503, filed 10/31/96, effective 12/1/96.]

WAC 296-307-49505 What precautions must be taken when welding or cutting containers? (1) No welding, cutting, or other hot work may be performed on used drums, barrels, tanks or other containers until they have been cleaned thoroughly enough to be certain that there are no flammable materials present or any substances such as greases, tars, acids, or other materials which when subjected to heat, might produce flammable or toxic vapors. Any pipe lines or connections to the drum or vessel must be disconnected or blanked.

(2) All hollow spaces, cavities, or containers must be vented to permit the escape of air or gases before preheating, cutting or welding. Purging with inert gas is recommended.

[WSR 97-09-013, recodified as § 296-307-49505, filed 4/7/97, effective 4/7/97. Statutory Authority: RCW 49.17.040, [49.17.]050 and [49.17.]060. WSR 96-22-048, § 296-306A-49505, filed 10/31/96, effective 12/1/96.]

WAC 296-307-49507 What precautions must be taken when welding in confined spaces? (1) When arc welding work is stopped for a substantial time, such as during lunch or overnight, all electrodes must be removed from the holders and the holders carefully located so that accidental contact cannot occur and the machine be disconnected from the power source.

(2) In order to eliminate the possibility of gas escaping through leaks or improperly closed valves, when gas welding or cutting, the torch valves must be closed and the gas supply to the torch positively shut off at some point outside the confined area whenever the torch is not to be used for a substantial period of time, such as during lunch hour or overnight. Where practical, the torch and hose must also be removed from the confined space.

[WSR 97-09-013, recodified as § 296-307-49507, filed 4/7/97, effective 4/7/97. Statutory Authority: RCW 49.17.040, [49.17.]050 and [49.17.]060. WSR 96-22-048, § 296-306A-49507, filed 10/31/96, effective 12/1/96.]

WAC 296-307-500 Protection of employees.

[WSR 97-09-013, recodified as § 296-307-500, filed 4/7/97, effective 4/7/97. Statutory Authority: RCW 49.17.040, [49.17.]050 and [49.17.]060. WSR 96-22-048, § 296-306A-500, filed 10/31/96, effective 12/1/96.]

WAC 296-307-50001 How must eye protection be selected? (1) Helmets or hand shields must be used during all arc welding or arc cutting operations, excluding submerged arc welding. Goggles should also be worn during arc welding or cutting operations to provide protection from injurious rays from adjacent work, and from flying objects. The goggles may have either clear or colored glass, depending on the amount of exposure to adjacent welding operations. Helpers or attendants must have proper eye protection.

(2) Goggles or other suitable eye protection must be used during all gas welding or oxygen cutting operations. Spectacles without side shields, with suitable filter lenses are permitted for use during gas welding operations on light work, for torch brazing, or for inspection.

(3) All operators and attendants of resistance welding or resistance brazing equipment must use transparent face shields or goggles, depending on the job, to protect their faces or eyes as required.

(4) Suitable goggles must be provided where needed for brazing operations not above.

[WSR 97-09-013, recodified as § 296-307-50001, filed 4/7/97, effective 4/7/97. Statutory Authority: RCW 49.17.040, [49.17.]050 and [49.17.]060. WSR 96-22-048, § 296-306A-50001, filed 10/31/96, effective 12/1/96.]

WAC 296-307-50003 What specifications must eye protection meet? (1) Helmets and hand shields must be made of a material that is an insulator for heat and electricity. Helmets, shields and goggles must be not readily flammable and must be able to be sterilized.

(2) Helmets and hand shields must be arranged to protect the face, neck and ears from direct radiant energy from the arc.

(3) Helmets must have filter plates and cover plates designed for easy removal.

(4) All parts must be constructed of a material that will not readily corrode or discolor the skin.

(5) Goggles must be ventilated to prevent fogging of the lenses as much as practical.

(6) Cover lenses or plates should be provided to protect each helmet, hand shield, or goggle filter lens or plate.

(7) All glass for lenses must be tempered, substantially free from scratches, air bubbles, waves and other flaws. Except when a lens is ground to provide proper optical correction for defective vision, the front and rear surfaces of lenses and windows must be smooth and parallel.

(8) Lenses must be marked with the source and shade.

(9) Following is a guide to select proper shade numbers. Individual needs may vary.

Welding Operation	Shade No.
Shielded metal-arc welding—1/16-, 3/32-, 1/8-, 5/32-inch electrodes	10
Gas-shielded arc welding (nonferrous)—1/16-, 3/32-, 1/8-, 5/32-inch electrodes	11

Welding Operation	Shade No.
Gas-shielded arc welding (ferrous)—1/16-, 3/32-,1/8-, 5/32-inch electrodes	12
Shielded metal-arc welding: 3/16-, 7/32-, 1/4-inch electrodes	12
5/16-, 3/8-inch electrodes	14
Atomic hydrogen welding	10-14
Carbon arc welding	14
Soldering	2
Torch brazing	3 or 4
Light cutting, up to 1 inch	3 or 4
Medium cutting, 1 inch to 6 inches	4 or 5
Heavy cutting, 6 inches and over	5 or 6
Gas welding (light) up to 1/8 inch	4 or 5
Gas welding (medium) 1/8 inch to 1/2 inch	5 or 6
Gas welding (heavy) 1/2 inch and over	6 or 8

Note: In gas welding or oxygen cutting where the torch produces a high yellow light it is desirable to use a filter or lens that absorbs the yellow or sodium line in the visible light of the operation.

(10) All filter lenses and plates must meet the test for transmission of radiant energy prescribed in ANSI Z 87.1-1968—American National Standard Practice for Occupational and Educational Eye and Face Protection.

(11) Where the work permits, an arc welder should be enclosed in an individual booth painted with a finish of low-reflectivity such as zinc oxide (an important factor for absorbing ultraviolet radiations) and lamp black, or must be enclosed with noncombustible screens similarly painted. Booths and screens must permit circulation of air at floor level. Employees or other persons adjacent to the welding areas must be protected from the rays by noncombustible or flameproof screens or shields or must be required to wear appropriate goggles.

[WSR 97-09-013, recodified as § 296-307-50003, filed 4/7/97, effective 4/7/97. Statutory Authority: RCW 49.17.040, [49.17.]050 and [49.17.]060. WSR 96-22-048, § 296-306A-50003, filed 10/31/96, effective 12/1/96.]

WAC 296-307-50005 What protective clothing must welders wear? (1) Employees exposed to the hazards created by welding, cutting, or brazing operations must be protected by personal protective equipment according to the requirements of chapter 296-307 WAC Part H. Appropriate protective clothing required for any welding operation will vary with the size, nature and location of the work to be performed.

(2) The following suggestions may be helpful when choosing protective clothing:

(a) Except when engaged in light work, all welders should wear flameproof gauntlet gloves.

(b) Flameproof aprons made of leather, asbestos, or other suitable material may help to protect against radiated heat and sparks.

(c) Woolen clothing is better than cotton because it is less easily ignited and helps to protect the welder from changes in temperature. Cotton clothing, if used, should be chemically treated to reduce its combustibility. All outer clothing such as jumpers or overalls should be reasonably free from oil or grease.

(d) Sparks may lodge in rolled-up sleeves, pockets, or cuffs. Therefore sleeves and collars should be buttoned, and clothing should have no front pockets. Trousers or overalls should be uncuffed.

(e) For heavy work, fire-resistant leggings, high boots, or other equivalent means should be used.

(f) In production work a sheet metal screen in front of the employee's legs can provide further protection against sparks and molten metal in cutting operations.

(g) Capes or shoulder covers made of leather or other suitable materials should be worn during overhead welding or cutting operations. Leather skull caps may be worn under helmets to prevent head burns.

(h) For welding and cutting overhead or in extremely confined spaces, ear protection is sometimes desirable.

(i) Where there is exposure to sharp or heavy falling objects, or a hazard of bumping in confined spaces, hard hats or head protectors must be used.

[Statutory Authority: RCW 49.17.040. WSR 98-24-096, § 296-307-50005, filed 12/1/98, effective 3/1/99. WSR 97-09-013, recodified as § 296-307-50005, filed 4/7/97, effective 4/7/97. Statutory Authority: RCW 49.17.040, [49.17.]050 and [49.17.]060. WSR 96-22-048, § 296-306A-50005, filed 10/31/96, effective 12/1/96.]

WAC 296-307-50007 What other requirements apply to employee protection? (1) You must ensure that a welder or helper working on platforms, scaffolds, or runways is protected against falling by using railings, safety belts, life lines, or other equally effective safeguards.

(2) Welders must place welding cable and other equipment so that it is clear of passageways, ladders, and stairways.

[WSR 97-09-013, recodified as § 296-307-50007, filed 4/7/97, effective 4/7/97. Statutory Authority: RCW 49.17.040, [49.17.]050 and [49.17.]060. WSR 96-22-048, § 296-306A-50007, filed 10/31/96, effective 12/1/96.]

WAC 296-307-50009 What employee protection must be provided in confined spaces? "Confined space" means a relatively small or restricted space such as a tank, boiler, pressure vessel, or small compartment of a ship.

(1) Confined spaces must be ventilated. For ventilation requirements see WAC 296-307-50011 through 296-307-50029.

(2) When welding or cutting in a confined space, the gas cylinders and welding machines must be left outside. Before operations are started, heavy portable equipment mounted on wheels must be securely blocked to prevent accidental movement.

(3) Where a welder must enter a confined space through a manhole or other small opening, means must be provided for quickly removing the welder in case of emergency. When safety belts and lifelines are used, they must be attached so that the welder's body cannot be jammed in a small exit opening. An attendant with a preplanned rescue procedure must be stationed outside to observe the welder at all times and be able to put rescue operations into effect.

(4) After welding operations are completed, the welder must mark the hot metal or provide some other means of warning other employees.

[Statutory Authority: RCW 49.17.040. WSR 98-24-096, § 296-307-50009, filed 12/1/98, effective 3/1/99. WSR 97-09-013, recodified as § 296-307-50009, filed 4/7/97, effective 4/7/97. Statutory Authority: RCW 49.17.040, [49.17.]050 and [49.17.]060. WSR 96-22-048, § 296-306A-50009, filed 10/31/96, effective 12/1/96.]

WAC 296-307-50011 What general requirements apply to welding ventilation? (1) The following three factors in arc and gas welding must be considered when determining the amount of contamination to which welders may be exposed:

(a) Dimensions of space in which welding is to be done (especially ceiling height);

(b) Number of welders; and

(c) The possibility of hazardous fumes, gases, or dust according to the metals involved.

(2) Other factors involved may require ventilation or respiratory protective devices as needed to meet the requirements of this section. Such factors include:

(a) Atmospheric conditions;

(b) Heat generated; and

(c) Presence of volatile solvents.

(3) When welding must be performed in a space entirely screened on all sides, the screens must be arranged so that no serious restriction of ventilation exists. The screens should be mounted so that they are about 2 feet above the floor unless the work is performed at so low a level that the screen must be extended nearer to the floor to protect nearby employees from the glare of welding.

(4) Local exhaust or general ventilating systems must be provided and arranged to keep the amount of toxic fumes, gases, or dusts below the maximum allowable in chapter 296-62 WAC.

Note: A number of potentially hazardous materials are employed in fluxes, coatings, coverings, and filler metals used in welding and cutting or are released to the atmosphere during welding and cutting. These include but are not limited to the materials itemized in WAC 296-307-50019 through 296-307-50029.

(5) You must determine which potentially hazardous materials are associated with welding and cutting and inform employees through signs, labels or other appropriate means.

(a) Welding may produce fumes and gases hazardous to health. Avoid breathing these fumes and gases. Use adequate ventilation. See ANSI Z 49.1-1967, Safety in Welding and Cutting, published by the American Welding Society.

(b) Brazing (welding) filler metals containing cadmium in significant amounts must carry the following notice on tags, boxes, or other containers:

WARNING
CONTAINS CADMIUM—POISONOUS FUMES MAY BE FORMED ON HEATING

• Do not breathe fumes. Use only with adequate ventilation such as fume collectors, exhaust ventilators, or air-supplied respirators. See ANSI Z 49.1-1967.

• If chest pain, cough, or fever develops after use call physician immediately.

• Keep children away when using.

(c) Brazing and gas welding fluxes containing fluorine compounds must have a cautionary wording to indicate that they contain fluorine compounds. The American Welding Society recommends the following for brazing and gas welding fluxes:

CAUTION
CONTAINS FLUORIDES

This flux when heated gives off fumes that may irritate eyes, nose and throat.

• Avoid fumes. Use only in well-ventilated spaces.

• Avoid contact of flux with eyes or skin.

• Do not take internally.

[Statutory Authority: RCW 49.17.040. WSR 98-24-096, § 296-307-50011, filed 12/1/98, effective 3/1/99. WSR 97-09-013, recodified as § 296-307-50011, filed 4/7/97, effective 4/7/97. Statutory Authority: RCW 49.17.040, [49.17.]050 and [49.17.]060. WSR 96-22-048, § 296-306A-50011, filed 10/31/96, effective 12/1/96.]

WAC 296-307-50013 What ventilation must be provided for general welding and cutting? (1) Mechanical ventilation must be provided when welding or cutting is done on metals not covered in WAC 296-307-50019 through 296-307-50029 in the following locations:

(a) In a space of less than 10,000 cubic feet per welder.

(b) In a room with a ceiling height of less than 16 feet.

(c) In confined spaces or where the welding space contains partitions, balconies, or other structural barriers to the extent that they significantly obstruct cross-ventilation.

(2) Ventilation must be at the minimum rate of 2,000 cubic feet per minute per welder.

Exception: This requirement does not apply where local exhaust hoods and booths that meet the requirements of WAC 296-307-50015, or airline respirators approved by the Mine Safety and Health Administration (MSHA) and the National Institute for Occupational Safety and Health (NIOSH) for such purposes are provided. Natural ventilation is considered sufficient for welding or cutting operations where the restrictions in subsection (1) of this section are not present.

[Statutory Authority: RCW 49.17.040. WSR 98-24-096, § 296-307-50013, filed 12/1/98, effective 3/1/99. WSR 97-09-013, recodified as § 296-307-50013, filed 4/7/97, effective 4/7/97. Statutory Authority: RCW 49.17.040, [49.17.]050 and [49.17.]060. WSR 96-22-048, § 296-306A-50013, filed 10/31/96, effective 12/1/96.]

WAC 296-307-50015 What requirements apply to local exhaust hoods and booths? Mechanical local exhaust ventilation may be provided by either of the following:

(1) Freely movable hoods intended to be placed by the welder as near as practical to the work being welded and provided with a rate of airflow sufficient to maintain a velocity in the direction of the hood of 100 linear feet per minute in the zone of welding when the hood is at its most remote distance from the point of welding. The rates of ventilation required to accomplish this control velocity using a 3-inch wide flanged suction opening are shown in the following table:

Welding zone	Minimum air flow cubic feet/minutes	Duct diameter inches
4 to 6 inches from arc or torch	150	3
6 to 8 inches from arc or torch	275	3-1/2
8 to 10 inches from arc or torch	425	4-1/2
10 to 12 inches from arc or torch	600	5-1/2

1 When brazing with cadmium bearing materials or when cutting on such materials increased rates of ventilation may be required.

2 Nearest half-inch duct diameter based on 4,000 feet per minute velocity in pipe.

(2) A fixed enclosure with a top and at least two sides that surround the welding or cutting operations and with a rate of airflow sufficient to maintain a velocity away from the welder of not less than 100 linear feet per minute.

[WSR 97-09-013, recodified as § 296-307-50015, filed 4/7/97, effective 4/7/97. Statutory Authority: RCW 49.17.040, [49.17.]050 and [49.17.]060. WSR 96-22-048, § 296-306A-50015, filed 10/31/96, effective 12/1/96.]

WAC 296-307-50017 What ventilation must be provided in confined spaces? (1) All welding and cutting operations carried on in confined spaces must be adequately ventilated to prevent the accumulation of toxic materials or possible oxygen deficiency. This applies to welders, helpers, and other employees in the immediate vicinity. All replacement air must be clean and respirable.

(2) In circumstances where it is impossible to provide such ventilation, airline respirators or hose masks approved by the Mine Safety and Health Administration (MSHA) and the National Institute for Occupational Safety and Health (NIOSH) for this purpose must be used.

(3) In areas immediately hazardous to life, hose masks with blowers or self-contained breathing equipment must be used. The breathing equipment must be approved by the Mine Safety and Health Administration (MSHA) and the National Institute for Occupational Safety and Health (NIOSH).

(4) Where welding operations are carried on in confined spaces and where welders and helpers are provided with hose masks, hose masks with blowers or self-contained breathing equipment approved by the Mine Safety and Health Administration (MSHA) and the National Institute for Occupational Safety and Health (NIOSH), an employee must be stationed on the outside of such confined spaces to ensure the safety of those working within.

(5) Oxygen must not be used for ventilation.

[WSR 97-09-013, recodified as § 296-307-50017, filed 4/7/97, effective 4/7/97. Statutory Authority: RCW 49.17.040, [49.17.]050 and [49.17.]060. WSR 96-22-048, § 296-306A-50017, filed 10/31/96, effective 12/1/96.]

WAC 296-307-50019 What requirements apply to welding fluorine compounds? In confined spaces, welding or cutting involving fluxes, coverings, or other materials that contain fluorine compounds must be done according to WAC 296-307-50017.

"Fluorine compound" means a compound that contains fluorine as an element in chemical combination, not as a free gas.

Note: The need for local exhaust ventilation or airline respirators for welding or cutting in other than confined spaces will depend on the circumstances. However, such protection is desirable for fixed-location production welding and for all production welding on stainless steels. Where air samples taken at the welding location indicate that the fluorides liberated are below the maximum allowable concentration, such protection is not necessary.

[Statutory Authority: RCW 49.17.040. WSR 98-24-096, § 296-307-50019, filed 12/1/98, effective 3/1/99. WSR 97-09-013, recodified as § 296-307-50019, filed 4/7/97, effective 4/7/97. Statutory Authority: RCW 49.17.040, [49.17.]050 and [49.17.]060. WSR 96-22-048, § 296-306A-50019, filed 10/31/96, effective 12/1/96.]

WAC 296-307-50021 What requirements apply to welding zinc? (1) In confined spaces welding or cutting involving zinc-bearing base or filler metals or metals coated with zinc-bearing materials must be done according to WAC 296-307-50017.

(2) Indoors, welding or cutting involving zinc-bearing base or filler metals coated with zinc-bearing materials must be done according to WAC 296-307-50015.

[Statutory Authority: RCW 49.17.040. WSR 98-24-096, § 296-307-50021, filed 12/1/98, effective 3/1/99. WSR 97-09-013, recodified as § 296-307-50021, filed 4/7/97, effective 4/7/97. Statutory Authority: RCW 49.17.040, [49.17.]050 and [49.17.]060. WSR 96-22-048, § 296-306A-50021, filed 10/31/96, effective 12/1/96.]

WAC 296-307-50023 What requirements apply to welding lead? (1) In confined spaces, welding involving lead-base metals (erroneously called lead-burning) must be done according to WAC 296-307-50017.

(2) Indoors, welding involving lead-base metals must be done according to WAC 296-307-50015.

(3) In confined spaces or indoors, welding or cutting involving metals containing lead, other than as an impurity, or involving metals coated with lead-bearing materials, including paint, must be done using local exhaust ventilation or airline respirators. Outdoors, such operations must be done using respiratory protective equipment approved by the Mine Safety and Health Administration (MSHA) and the National Institute for Occupational Safety and Health (NIOSH) for such purposes. In all cases, employees in the immediate vicinity of the cutting operation must be protected as necessary by local exhaust ventilation or airline respirators.

Note: See chapter 296-62 WAC for additional requirements on lead.

[Statutory Authority: RCW 49.17.040. WSR 98-24-096, § 296-307-50023, filed 12/1/98, effective 3/1/99. WSR 97-09-013, recodified as § 296-307-50023, filed 4/7/97, effective 4/7/97. Statutory Authority: RCW 49.17.040, [49.17.]050 and [49.17.]060. WSR 96-22-048, § 296-306A-50023, filed 10/31/96, effective 12/1/96.]

WAC 296-307-50025 What requirements apply to welding beryllium? Welding or cutting indoors, outdoors, or in confined spaces involving beryllium-containing base or filler metals must be done using local exhaust ventilation and airline respirators unless atmospheric tests under the most adverse conditions have established that employee exposure

is within the acceptable concentrations defined by WAC 296-307-62625. In all cases, employees in the immediate vicinity of the welding or cutting operations must be protected as necessary by local exhaust ventilation or airline respirators.

[Statutory Authority: RCW 49.17.010, 49.17.040, 49.17.050, 49.17.060. WSR 05-01-166, § 296-307-50025, filed 12/21/04, effective 4/2/05. WSR 97-09-013, recodified as § 296-307-50025, filed 4/7/97, effective 4/7/97. Statutory Authority: RCW 49.17.040, [49.17.]050 and [49.17.]060. WSR 96-22-048, § 296-306A-50025, filed 10/31/96, effective 12/1/96.]

WAC 296-307-50027 What requirements apply to welding cadmium? (1) Welding or cutting indoors or in confined spaces involving cadmium-bearing or cadmium-coated base metals must be done using local exhaust ventilation or airline respirators unless atmospheric tests under the most adverse conditions have established that employee exposure is within the acceptable concentrations defined by chapter 296-62 WAC. Outdoors, such operations must be done using respiratory protective equipment such as fume respirators approved by the Mine Safety and Health Administration (MSHA) and the National Institute for Occupational Safety and Health (NIOSH) for such purposes.

(2) Welding (brazing) involving cadmium-bearing filler metals must be done using ventilation as prescribed in WAC 296-307-50015 or 296-307-50017 if the work is to be done in a confined space.

Note: See chapter 296-62 WAC for additional requirements on cadmium.

[Statutory Authority: RCW 49.17.040. WSR 98-24-096, § 296-307-50027, filed 12/1/98, effective 3/1/99. WSR 97-09-013, recodified as § 296-307-50027, filed 4/7/97, effective 4/7/97. Statutory Authority: RCW 49.17.040, [49.17.]050 and [49.17.]060. WSR 96-22-048, § 296-306A-50027, filed 10/31/96, effective 12/1/96.]

WAC 296-307-50029 What requirements apply to welding mercury? Welding or cutting indoors or in a confined space involving metals coated with mercury-bearing materials, including paint, must be done using local exhaust ventilation or airline respirators unless atmospheric tests under the most adverse conditions have established that employee exposure is within the acceptable concentrations defined by WAC 296-307-62625. Outdoors, such operations must be done using respiratory protective equipment approved by the Mine Safety and Health Administration (MSHA) and the National Institute for Occupational Safety and Health (NIOSH) for such purposes.

[Statutory Authority: RCW 49.17.010, 49.17.040, 49.17.050, 49.17.060. WSR 05-01-166, § 296-307-50029, filed 12/21/04, effective 4/2/05. WSR 97-09-013, recodified as § 296-307-50029, filed 4/7/97, effective 4/7/97. Statutory Authority: RCW 49.17.040, [49.17.]050 and [49.17.]060. WSR 96-22-048, § 296-306A-50029, filed 10/31/96, effective 12/1/96.]

Part W

Powered Industrial Trucks (Forklifts)

WAC 296-307-520 Powered industrial trucks (forklifts).

[WSR 97-09-013, recodified as § 296-307-520, filed 4/7/97, effective 4/7/97. Statutory Authority: RCW 49.17.040, [49.17.]050 and [49.17.]060. WSR 96-22-048, § 296-306A-520, filed 10/31/96, effective 12/1/96.]

WAC 296-307-52001 What does this section cover? WAC 296-307-520 applies to all powered industrial trucks used in agricultural operations.

[Statutory Authority: RCW 49.17.040. WSR 98-24-096, § 296-307-52001, filed 12/1/98, effective 3/1/99. WSR 97-09-013, recodified as § 296-307-52001, filed 4/7/97, effective 4/7/97. Statutory Authority: RCW 49.17.040, [49.17.]050 and [49.17.]060. WSR 96-22-048, § 296-306A-52001, filed 10/31/96, effective 12/1/96.]

WAC 296-307-52003 What is a "powered industrial truck"? "Powered industrial truck" (or "truck") means a fork truck, industrial tractor, platform lift truck, motorized hand truck, or other specialized industrial trucks, powered by electric motors or internal combustion engines. The definition does not include compressed gas-operated industrial trucks, tractor-mounted forklifts, or vehicles intended primarily for earth moving or over-the-road hauling.

[Statutory Authority: RCW 49.17.040. WSR 98-24-096, § 296-307-52003, filed 12/1/98, effective 3/1/99. WSR 97-09-013, recodified as § 296-307-52003, filed 4/7/97, effective 4/7/97. Statutory Authority: RCW 49.17.040, [49.17.]050 and [49.17.]060. WSR 96-22-048, § 296-306A-52003, filed 10/31/96, effective 12/1/96.]

WAC 296-307-52005 What manufacturer's requirements apply to powered industrial trucks? (1) All powered industrial trucks in use by an employer must meet the applicable requirements of design, construction and stability as defined by the American National Standards Institute B56.1-1969, Safety Standards for Powered Industrial Trucks, except for vehicles intended primarily for earth moving or over-the-road hauling. All new powered industrial trucks acquired and used by an employer on or after March 1, 2000, must meet the applicable requirements of design, construction and stability as defined in ASME B56.1-1993. The employer must ensure that all powered industrial trucks are inspected, maintained and operated in accordance with this section and the manufacturer's recommendations and specifications.

(2) Approved trucks must have a label indicating approval by the testing laboratory as meeting the specifications and requirements of ANSI B56.1-1969.

(3) Modifications or additions must only be performed with the manufacturer's prior written approval. When modifications or additions are made, capacity, operation, and maintenance instruction plates, tags, or decals must be changed accordingly.

(4) If the truck is equipped with front-end attachments other than factory installed attachments, it must be marked to identify the attachments and show the approximate weight of the truck and attachment combination at maximum elevation with the load centered from side to side.

(5) The user must ensure that all nameplates and markings are in place and legible.

[Statutory Authority: RCW 49.17.010, [49.17].040 and [49.17].050. WSR 00-01-176, § 296-307-52005, filed 12/21/99, effective 3/1/00. Statutory Authority: RCW 49.17.040. WSR 98-24-096, § 296-307-52005, filed 12/1/98, effective 3/1/99. WSR 97-09-013, recodified as § 296-307-52005, filed 4/7/97, effective 4/7/97. Statutory Authority: RCW 49.17.040, [49.17.]050 and [49.17.]060. WSR 96-22-048, § 296-306A-52005, filed 10/31/96, effective 12/1/96.]

WAC 296-307-52007 What are the classifications of powered industrial trucks? Powered industrial trucks are identified according to the following classifications:

(1) "D" refers to trucks that are diesel engine powered that have minimum safeguards against inherent fire hazards.

(2) "DS" refers to diesel powered trucks that, in addition to meeting all the requirements for the type D trucks, with additional safeguards to the exhaust, fuel, and electrical systems.

(3) "DY" refers to diesel powered trucks that have all the safeguards of the DS trucks; in addition, any electrical equipment is completely enclosed. They are equipped with temperature limitation features.

(4) "E" refers to electrically powered trucks with minimum acceptable safeguards against inherent fire hazards.

(5) "ES" refers to electrically powered trucks that, in addition to all of the requirements for the E trucks, are provided with additional safeguards to the electrical system to prevent emission of hazardous sparks and to limit surface temperatures.

(6) "EE" refers to electrically powered trucks that have, in addition to all of the requirements for the E and ES type trucks, have their electric motors and all other electrical equipment completely enclosed.

(7) "EX" refers to electrically powered trucks that differ from E, ES, or EE type trucks in that the electrical fittings and equipment are so designed, constructed, and assembled to be used in atmospheres containing flammable vapors or dusts.

(8) "G" refers to gasoline powered trucks that have minimum acceptable safeguards against inherent fire hazards.

(9) "GS" refers to gasoline powered trucks with additional safeguards to the exhaust, fuel, and electrical systems.

(10) "LP" refers to liquified petroleum gas-powered trucks that have minimum acceptable safeguards against inherent fire hazards.

(11) "LPS" refers to LP-gas powered trucks that in addition to meeting the requirements for LP trucks, are provided with additional safeguards to the exhaust, fuel, and electrical systems.

[Statutory Authority: RCW 49.17.010, [49.17].040 and [49.17].050. WSR 00-01-176, § 296-307-52007, filed 12/21/99, effective 3/1/00. WSR 97-09-013, recodified as § 296-307-52007, filed 4/7/97, effective 4/7/97. Statutory Authority: RCW 49.17.040, [49.17.]050 and [49.17.]060. WSR 96-22-048, § 296-306A-52007, filed 10/31/96, effective 12/1/96.]

WAC 296-307-52009 What must a user consider before choosing a powered industrial truck? Before choosing the industrial truck to use, the user must determine whether the atmosphere or location is hazardous or nonhazardous. The type of industrial truck must be chosen according to the requirements of WAC 296-307-52011.

[Statutory Authority: RCW 49.17.040. WSR 98-24-096, § 296-307-52009, filed 12/1/98, effective 3/1/99. WSR 97-09-013, recodified as § 296-307-52009, filed 4/7/97, effective 4/7/97. Statutory Authority: RCW 49.17.040, [49.17.]050 and [49.17.]060. WSR 96-22-048, § 296-306A-52009, filed 10/31/96, effective 12/1/96.]

WAC 296-307-52011 What requirements determine which trucks to use in specific hazardous environments? Following are the minimum truck types required in specific hazardous environments. You may choose to use industrial trucks having greater safeguards. Tables W-1 and W-2 give specific vehicle usage information by Group and Class.

TABLE W-1
SUMMARY TABLE ON USE OF INDUSTRIAL TRUCKS IN VARIOUS LOCATIONS

CLASSES (Description of classes)	GROUPS (Examples of locations or atmosphere in classes and groups)				DIVISIONS (Nature of hazardous conditions)	
UNCLASSIFIED	No group designations in Unclassified				No divisions in Unclassified	
Locations not possessing atmospheres as described in other columns.	Piers and wharves inside and outside general storage, general industrial or commercial properties					
CLASS I LOCATIONS	A	B	C	D	1	2
Locations in which flammable gases or vapors are, or may be, present in the air in quantities sufficient to produce explosive or ignitible mixtures.	Acetylene	Hydrogen	Ethyl ether	Gasoline Naphtha Alcohols Acetone Lacquer solvent Benzene	Conditions exists continuously, intermittently, or periodically under normal operating conditions.	Condition may occur due to accidentally, for example, due to a puncture of a storage drum.
CLASS II LOCATIONS	E	F	G		1	2
Locations which are hazardous because of the presence of combustible dust.	Metal dust	Carbon black Coal dust Coke dust	Grain dust Flour dust Starch dust Organic dust		Explosive mixture may be present under normal operating conditions, or where failure of equipment may cause the condition to exist simultaneously with arcing or sparking of electrical equipment, or where dusts of an electrically conducting nature may be present.	Explosive mixture not normally present, but where deposits of dust may cause heat rise in electrical equipment, or where such deposits may be ignited by arcs or sparks from electrical equipment.
CLASS III LOCATIONS	Class III has no groups				1	2

CLASSES (Description of classes)	GROUPS (Examples of locations or atmosphere in classes and groups)	DIVISIONS (Nature of hazardous conditions)	
Locations where easily ignitible fibers or flyings are present but not likely to be in suspension in quantifies sufficient to produce ignitible mixtures.	Baled waste, cocoa fiber, cotton, excelsior, hemp, istle, jute, kapok, oakum, sisal, Spanish moss, synthetic fibers, tow.	Locations in which easily ignitible fibers or materials producing combustible flyings are handled, manufactured, or used.	Locations in which easily ignitible fibers are stored or handled (except in the process of manufacture).

TABLE W-2
AUTHORIZED USES OF TRUCKS BY TYPES IN GROUPS OF CLASSES AND DIVISIONS

	UNCLASSIFIED	CLASS I								CLASS II						CLASS III	
		DIV I				DIV II				DIV I			DIV II			DIV I	DIV II
Groups in classes	None	A	B	C	D	A	B	C	D	E	F	G	E	F	G	None	None
Type of truck authorized:																	
Diesel:																	
Type D	D**	. . .	. . .	. . .	. . .	. . .	. . .	. . .	. . .	. . .	. . .	. . .	. . .	. . .	. . .	. . .	. . .
Type DS	. . . . .	. . .	. . .	. . .	. . .	. . .	. . .	. . .	DS. . .	. . .	. . .	. . .	. . .	. . .	DS. . .	. . .	DS
Type DY	. . . . .	. . .	. . .	. . .	. . .	. . .	. . .	. . .	DY. . .	. . .	. . .	. . .	. . .	. . .	DY. . .	DY. . .	DY
Electric:																	
Type E	E**	. . .	. . .	. . .	. . .	. . .	. . .	. . .	. . .	. . .	. . .	. . .	. . .	. . .	. . .	. . .	E
Type ES	. . . . .	. . .	. . .	. . .	. . .	. . .	. . .	. . .	ES. . .	. . .	. . .	. . .	. . .	. . .	ES. . .	. . .	ES
Type EE	. . . . .	. . .	. . .	. . .	. . .	. . .	. . .	. . .	EE. . .	. . .	. . .	. . .	. . .	. . .	EE. . .	EE. . .	EE
Type EX	. . . . .	. . .	. . .	. . .	EX. . .	. . .	. . .	. . .	EX. . .	. . .	EX. . .	EX. .	. . .	. . .	EX. . .	EX. . .	EX
Gasoline:																	
Type G	G**	. . .	. . .	. . .	. . .	. . .	. . .	. . .	. . .	. . .	. . .	. . .	. . .	. . .	. . .	. . .	
Type GS	. . .	. . .	. . .	. . .	. . .	. . .	. . .	. . .	GS. . .	. . .	. . .	. . .	. . .	. . .	GS . . .	. . .	GS
LP-Gas:																	
Type LP	LP**	. . .	. . .	. . .	. . .	. . .	. . .	. . .	. . .	. . .	. . .	. . .	. . .	. . .	. . .	. . .	
Type LPS	. . .	. . .	. . .	. . .	. . .	. . .	. . .	. . .	LPS. . .	. . .	. . .	. . .	. . .	. . .	LPS. . .	. . .	LPS

** Trucks conforming to these types may also be used.

(1) Powered industrial trucks are prohibited in atmospheres with a hazardous concentration of:

- Acetaldehyde,
- Acetylene,
- Butadiene,
- Cyclopropane,
- Diethyl ether,
- Ethylene,
- Ethylene oxide,
- Hydrogen (or gases or vapors equivalent in hazard to hydrogen, such as manufactured gas),
- Isoprene,
- Propylene oxide, or
- Unsymmetrical dimethyl hydrazine (UDMH).

(a) Only approved EX trucks, or other trucks approved by the manufacturer, may be used in atmospheres containing hazardous concentrations of metal dust, including:

- Aluminum, magnesium, and their commercial alloys;
- Other dusts of similarly hazardous characteristics; or
- In atmospheres containing:
  - □ Carbon black,
  - □ Coal, or
  - □ Coke dust.

(b) In atmospheres where dust of magnesium, aluminum or aluminum bronze may be present, fuses, switches, motor controllers, and circuit breakers of trucks must have enclosures specifically approved for such locations.

(2) Only approved EX trucks, or other trucks approved by the manufacturer, may be used in atmospheres containing

- Acetone,
- Acrylonitrile,
- Alcohol,
- Ammonia,
- Benzine,
- Benzol,
- Butane,
- Ethylene dichloride,
- Gasoline,
- Hexane,
- Lacquer solvent vapors,
- Naphtha,
- Natural gas,
- Propane,
- Propylene,
- Styrene,
- Vinyl acetate,
- Vinyl chloride, or
- Xylenes

in quantities sufficient to produce explosive or ignitable mixtures.

(3) Only approved DY, EE, or EX trucks, or other trucks approved by the manufacturer, may be used in locations where volatile flammable liquids or flammable gases are handled, processed or used, if the hazardous liquids, vapors or gases are normally confined within closed containers or closed systems from which they can escape only in case of accidental rupture or breakdown, or in case of abnormal equipment operation.

Only approved DY, EE, or EX trucks, or other trucks approved by the manufacturer, may also be used in locations in which hazardous concentrations of gases or vapors are normally prevented by mechanical ventilation but that might become hazardous through failure or abnormal operation of the ventilating equipment.

(4) Only approved DS, ES, GS, or LPS trucks, or other trucks approved by the manufacturer, may be used in locations used for the storage of hazardous liquids in sealed containers or liquefied or compressed gases in containers. This classification includes locations where volatile flammable liquids or flammable gases or vapors are used but are hazardous only in case of an accident or an unusual operation condition.

The quantity of hazardous material that might escape in case of accident, the adequacy of ventilating equipment, the total area involved, and the business's history of explosions or fires are all factors that should be considered in determining which truck has sufficient safeguards for the location.

(a) Only approved EX trucks, or other trucks approved by the manufacturer, may be used in atmospheres in which combustible dust is or may be suspended in quantities sufficient to produce explosive or ignitable mixtures, or where mechanical failure or abnormal operation of machinery or equipment might cause such mixtures to be produced.

(b) The EX classification, or other trucks approved by the manufacturer as having equal or greater safeguards, usually includes the working areas of:

- Grain handling and storage plants,
- Rooms containing grinders or pulverizers,
- Cleaners,
- Graders,
- Scalpers,
- Open conveyors or spouts,
- Open bins or hoppers,
- Mixers or blenders,
- Automatic or hopper scales,
- Packing machinery,
- Elevator heads and boots,
- Stock distributors,
- Dust and stock collectors (except all-metal collectors vented to the outside),

and all similar dust producing machinery and equipment in:

□ Grain processing plants,
□ Starch plants,
□ Sugar pulverizing plants,
□ Malting plants,
□ Hay grinding plants, and other similar locations; and,
□ Areas where combustible dust may, under normal operating conditions, be present in the air in quantities sufficient to produce explosive or ignitable mixtures.

(5) Only approved DY, EE, or EX trucks, or other trucks approved by the manufacturer, may be used in atmospheres in which deposits or accumulations of combustible dust may be ignited by arcs or sparks from the truck, if combustible dust will not normally be suspended or thrown into suspension by the normal operation of equipment or apparatus in quantities sufficient to produce explosive or ignitable mixtures.

(6) Only approved DY, EE, or EX trucks, or other trucks approved by the manufacturer, may be used in locations with easily ignitable fibers or flyings if the fibers or flyings are not likely to be suspended in quantities sufficient to produce ignitable mixtures.

(7) Only approved DS, DY, ES, EE, EX, GS, or LPS trucks, or other trucks approved by the manufacturer, may be used in locations, including outside storage, where easily ignitable fibers are stored or handled, but are not processed or manufactured. E trucks that have been previously used in these locations may continue to be used.

(8) If storage warehouses and outside storage locations are hazardous, the specified approved truck, or other truck approved by the manufacturer, must be used. If not classified as hazardous, any approved D, E, G, or LP truck, or other truck approved by the manufacturer, may be used, or trucks meeting the requirements for these types may be used.

[Statutory Authority: RCW 49.17.010, [49.17].040 and [49.17].050. WSR 00-01-176, § 296-307-52011, filed 12/21/99, effective 3/1/00. Statutory Authority: RCW 49.17.040. WSR 98-24-096, § 296-307-52011, filed 12/1/98, effective 3/1/99. WSR 97-09-013, recodified as § 296-307-52011, filed 4/7/97, effective 4/7/97. Statutory Authority: RCW 49.17.040, [49.17.]050 and [49.17.]060. WSR 96-22-048, § 296-306A-52011, filed 10/31/96, effective 12/1/96.]

WAC 296-307-52013 In what environments may converted trucks be used? When powered industrial trucks that were originally approved to use gasoline are converted to use LP-gas according to WAC 296-307-52047(12), they may be used in locations where G, GS or LP, and LPS trucks are specified.

[Statutory Authority: RCW 49.17.040. WSR 98-24-096, § 296-307-52013, filed 12/1/98, effective 3/1/99. WSR 97-09-013, recodified as § 296-307-52013, filed 4/7/97, effective 4/7/97. Statutory Authority: RCW 49.17.040, [49.17.]050 and [49.17.]060. WSR 96-22-048, § 296-306A-52013, filed 10/31/96, effective 12/1/96.]

WAC 296-307-52015 What requirements apply to overhead safety guards? (1) High-lift rider trucks must be fitted with an overhead guard manufactured according to WAC 296-307-52005(1), unless operating conditions do not permit.

(2) An overhead guard must be used as protection against falling objects.

Note: An overhead guard is intended to offer protection from the impact of small packages, boxes, bagged material, and other objects involved in the job, but not to withstand the impact of a falling capacity load.

[Statutory Authority: RCW 49.17.040. WSR 98-24-096, § 296-307-52015, filed 12/1/98, effective 3/1/99. WSR 97-09-013, recodified as § 296-307-52015, filed 4/7/97, effective 4/7/97. Statutory Authority: RCW 49.17.040, [49.17.]050 and [49.17.]060. WSR 96-22-048, § 296-306A-52015, filed 10/31/96, effective 12/1/96.]

WAC 296-307-52017 What requirements apply to load backrests? (1) A load backrest extension must be used whenever necessary to minimize the possibility of the load or part of it from falling rearward.

(2) If the type of load presents a hazard, the user must equip fork trucks with a vertical load backrest extension manufactured according to WAC 296-307-52005(1).

[Statutory Authority: RCW 49.17.040. WSR 98-24-096, § 296-307-52017, filed 12/1/98, effective 3/1/99. WSR 97-09-013, recodified as § 296-307-

52017, filed 4/7/97, effective 4/7/97. Statutory Authority: RCW 49.17.040, [49.17.]050 and [49.17.]060. WSR 96-22-048, § 296-306A-52017, filed 10/31/96, effective 12/1/96.]

WAC 296-307-52019 What requirements apply to fuel handling and storage? (1) You must ensure that liquid fuels such as gasoline and diesel fuel are stored and handled according to NFPA Flammable and Combustible Liquids Code (NFPA No. 30-1996).

(2) You must ensure that LP-gas fuel is stored and handled according to NFPA Storage and Handling of Liquefied Petroleum Gases (NFPA No. 58-1998).

[Statutory Authority: RCW 49.17.010, [49.17].040 and [49.17].050. WSR 00-01-176, § 296-307-52019, filed 12/21/99, effective 3/1/00. WSR 97-09-013, recodified as § 296-307-52019, filed 4/7/97, effective 4/7/97. Statutory Authority: RCW 49.17.040, [49.17.]050 and [49.17.]060. WSR 96-22-048, § 296-306A-52019, filed 10/31/96, effective 12/1/96.]

WAC 296-307-52021 What requirements apply to lighting for operating areas? (1) Adequate lighting should be provided in operating areas. (See ANSI Practice for Industrial Lighting, ANSI/IES RP-7 1990.)

(2) Where general lighting is inadequate, directional lighting must be provided on the truck.

[Statutory Authority: RCW 49.17.010, [49.17].040 and [49.17].050. WSR 00-01-176, § 296-307-52021, filed 12/21/99, effective 3/1/00. WSR 97-09-013, recodified as § 296-307-52021, filed 4/7/97, effective 4/7/97. Statutory Authority: RCW 49.17.040, [49.17.]050 and [49.17.]060. WSR 96-22-048, § 296-306A-52021, filed 10/31/96, effective 12/1/96.]

WAC 296-307-52023 What level of carbon monoxide gas is allowed? Concentration levels of carbon monoxide gas created by truck operations must not exceed the levels specified in WAC 296-62-075, Part L (general occupational health standards).

Note: Questions concerning degree of concentration and methods of sampling should be referred to a qualified industrial hygienist.

[Statutory Authority: RCW 49.17.010, [49.17].040 and [49.17].050. WSR 00-01-176, § 296-307-52023, filed 12/21/99, effective 3/1/00. WSR 97-09-013, recodified as § 296-307-52023, filed 4/7/97, effective 4/7/97. Statutory Authority: RCW 49.17.040, [49.17.]050 and [49.17.]060. WSR 96-22-048, § 296-306A-52023, filed 10/31/96, effective 12/1/96.]

WAC 296-307-52025 What requirements apply to dockboards (bridge plates)? (1) Portable and powered dockboards must be strong enough to support the load carried on them.

(2) Portable dockboards must be secured in position, either by anchors or anti-slipping devices.

(3) Powered dockboards must meet the design and construction requirements of Commercial Standard CS202-56 (1956) "Industrial Lifts and Hinged Loading Ramps" published by the U.S. Department of Commerce.

(4) Dockboard or bridge plates must be driven over carefully and slowly and their rated capacity never exceeded.

(5) Portable dockboards must have handholds for safe handling.

(6) Railroad cars must be kept stationary while dockboards or bridge plates are in position.

[WSR 97-09-013, recodified as § 296-307-52025, filed 4/7/97, effective 4/7/97. Statutory Authority: RCW 49.17.040, [49.17.]050 and [49.17.]060. WSR 96-22-048, § 296-306A-52025, filed 10/31/96, effective 12/1/96.]

WAC 296-307-52027 What rules apply to loading trucks, trailers, and railroad cars with powered industrial trucks? (1) Wheel stops or other positive protection must be provided to prevent railroad cars from moving during loading or unloading.

(2) Fixed jacks may be necessary to support a semi-trailer and prevent up-ending during loading or unloading if the trailer is not coupled to a tractor.

(3) Many truck-trailers are equipped with a rear-end protection device to prevent cars from wedging underneath during a collision. These protection devices must be used with equipment that secures the truck-trailer to the loading dock. Wheel chocks are not required under the following conditions:

(a) Trucks or trailers are secured to the loading dock with a mechanical system that prevents movement away from the dock during loading, unloading, and boarding.

(b) All of the mechanical equipment is installed, maintained, and used as recommended by the manufacturer.

(c) Any damaged mechanical equipment is removed from service immediately and is not used to secure trucks and trailers.

(4) The flooring of trucks, trailers, and railroad cars must be checked for breaks and weakness before use.

[WSR 97-09-013, recodified as § 296-307-52027, filed 4/7/97, effective 4/7/97. Statutory Authority: RCW 49.17.040, [49.17.]050 and [49.17.]060. WSR 96-22-048, § 296-306A-52027, filed 10/31/96, effective 12/1/96.]

WAC 296-307-52029 What are the operator training requirements for powered industrial trucks? (1) **Safe operation.**

(a) The employer must ensure that each powered industrial truck operator is trained in the safe operation of a powered industrial truck, and is competent to operate a powered industrial truck safely.

(b) Prior to permitting an employee to operate a powered industrial truck (except for training purposes), the employer must ensure that each operator has successfully completed the training required by this section.

(2) **Training program implementation.**

(a) Trainees may operate a powered industrial truck only under the direct supervision of persons who have the knowledge, training, and experience to train operators and where such operation does not endanger the trainee or other employees.

Note: The employer, or any other qualified person of the employer's choosing, may give required training and evaluation.

(b) Training must consist of formal instruction and/or practical training, conveyed in a manner that the trainee understands.

Note: Formal instruction may include lecture, discussion, interactive computer learning, video tape and/or written material. Practical training may include demonstrations performed by the trainer and practical exercises performed by the trainee.

(3) **Training program content.** Powered industrial truck operators must receive initial training in the topics that follow, except in topics that the employer can demonstrate are not applicable to safe operation of the truck in the employer's workplace.

(a) Truck-related topics:

• Operating instructions, warnings and precautions for the types of truck the operator will be authorized to operate;

• Differences between the truck and the automobile;

• Truck controls and instrumentation: Where they are located, what they do, and how they work;

• Engine or motor operation;

• Steering and maneuvering;

• Visibility (including restrictions due to loading);

• Fork and attachment adaption, operation, and use limitations;

• Vehicle capacity;

• Vehicle stability;

• Any vehicle inspection and maintenance that the operator will be required to perform;

• Refueling and/or charging and recharging of batteries;

• Operating limitations;

• Any other operating instructions, warnings, or precautions listed in the operator's manual for the types of vehicle that the employee is being trained to operate.

(b) Workplace-related topics:

• Surface conditions where the vehicle will be operated;

• Composition of loads to be carried and load stability;

• Load manipulation, stacking, and unstacking;

• Pedestrian traffic in areas where the vehicle will be operated;

• Narrow aisles and other restricted places where the vehicle will be operated;

• Hazardous (classified) locations where the vehicle will be operated;

• Ramps and other sloped surfaces that could affect the vehicle's stability;

• Closed environments and other areas where insufficient ventilation or poor vehicle maintenance could cause a buildup of carbon monoxide or diesel exhaust;

• Other unique or potentially hazardous environmental conditions in the workplace that could affect safe operation.

(4) **Retraining.**

(a) Retraining in relevant topics must be provided to the operator when:

• The operator has been observed to operate the vehicle in an unsafe manner;

• The operator has been involved in an accident or near-miss incident;

• The operator has received an evaluation that reveals that the operator is not operating the truck safely;

• The operator is assigned to drive a different type of truck; or

• The condition in the workplace changes in a manner that could affect safe operation of the truck.

(b) Retraining must be provided to an operator if three years has elapsed since he or she last received training.

(5) **Avoidance of duplicative training.** If an operator has previously received training in a topic specified in subsection (3) of this section, and such training is appropriate to the truck and working conditions encountered, additional training in that topic is not required if the operator can provide proof of such training within three years, and the employer can verify operator competency.

(6) **Recordkeeping.** Employers must keep records showing that each operator has been trained or received retraining as required by this section. These records must include the name of the operator, the date of the training or retraining, and the name of the person(s) giving the training or retraining.

(7) **Implementation dates.** The employer must ensure that operators of powered industrial trucks are trained, as appropriate, by the effective date of this section. Employees hired on or after the effective date of this section must be trained and found competent prior to being assigned to operate a powered industrial truck.

(8) **Nonmandatory guidance.** To assist employers in implementing operator training requirements, a nonmandatory appendix has been added as WAC 296-307-52030. This appendix does not add to, alter, or reduce the requirements of this section.

[Statutory Authority: RCW 49.17.010, [49.17].040 and [49.17].050. WSR 00-01-176, § 296-307-52029, filed 12/21/99, effective 3/1/00. WSR 97-09-013, recodified as § 296-307-52029, filed 4/7/97, effective 4/7/97. Statutory Authority: RCW 49.17.040, [49.17.]050 and [49.17.]060. WSR 96-22-048, § 296-306A-52029, filed 10/31/96, effective 12/1/96.]

WAC 296-307-52030 Is there any additional (nonmandatory) information that may assist me with powered industrial truck operator training? (1) **Definitions.** The following definitions may help to explain the principle of stability:

"Center of gravity" means the point on an object at which all of the object's weight is concentrated. For symmetrical loads, the center of gravity is at the middle of the load.

"Counterweight" means the weight that is built into the truck's basic structure and is used to offset the load's weight and to maximize the vehicle's resistance to tipping over.

"Fulcrum" means the truck's axis of rotation when it tips over.

"Grade" means the slope of a surface, which is usually measured as the number of feet of rise or fall over a hundred foot horizontal distance (the slope is expressed as a percent).

"Lateral stability" means a truck's resistance to overturning sideways.

"Line of action" means an imaginary vertical line through an object's center of gravity.

"Load center" means the horizontal distance from the load's edge (or the fork's or other attachment's vertical face) to the line of action through the load's center of gravity.

"Longitudinal stability" means the truck's resistance to overturning forward or rearward.

"Moment" means the product of the object's weight times the distance from a fixed point (usually the fulcrum). In the case of a powered industrial truck, the distance is measured from the point at which the truck will tip over to the object's line of action. The distance is always measured perpendicular to the line of action.

"Track" means the distance between the wheels on the same axle of the truck.

"Wheelbase" means the distance between the centerline of the vehicle's front and rear wheels.

(2) **General.**

(a) Determining the stability of a powered industrial truck is simple once a few basic principles are understood. There are many factors that contribute to a vehicle's stability: The vehicle's wheelbase, track, and height; the load's weight

distribution; and the vehicle's counterweight location (if the vehicle is so equipped).

(b) The "stability triangle," used in most stability discussions, demonstrates stability simply (see Figures 1 and 2).

(3) **Basic principles.**

(a) Whether an object is stable depends on the object's "moment" (see definitions, this section) at one end of a system being greater than, equal to, or smaller than the object's moment at the system's other end. This principle can be seen in the way a seesaw or teeter-totter works: That is, if the product of the load and distance from the fulcrum (moment) is equal to the moment at the device's other end, the device is balanced and it will not move. However, if there is a greater moment at one end of the device, the device will try to move downward at the end with the greater moment.

(b) The longitudinal stability of a counterbalanced powered industrial truck depends on the vehicle's moment and the load's moment. In other words, if the mathematic product of the load-moment (the distance from the front wheels, the approximate point at which the vehicle would tip forward) to the load's center of gravity times the load's weight is less than the vehicle's moment, the system is balanced and will not tip forward. However, if the load's moment is greater than the vehicle's moment, the greater load-moment will force the truck to tip forward.

(4) **The stability triangle.**

(a) Almost all counterbalanced powered industrial trucks have a three-point suspension system, that is, the vehicle is supported at three points. This is true even if the vehicle has four wheels. The truck's steer axle is attached to the truck by a pivot pin in the axle's center. When the points are connected with imaginary lines, this three-point support forms a triangle called the stability triangle. Figure 1 depicts the stability triangle.

Figure 1

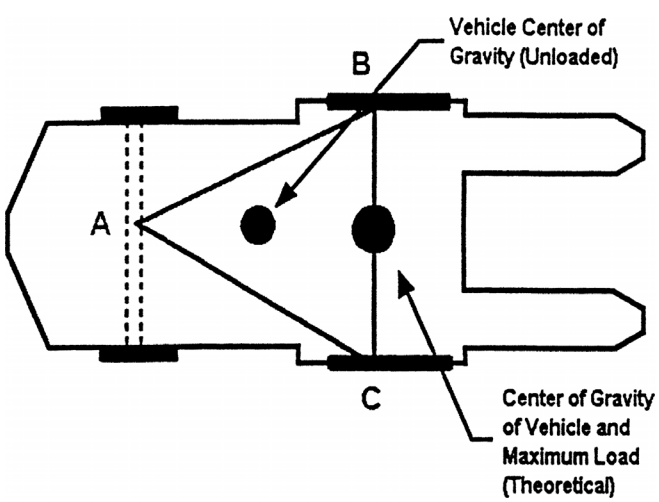

Notes: 1. When the vehicle is loaded, the combined center of gravity shifts toward line B-C. Theoretically, the maximum load will result in the center of gravity at the line B-C. In actual practice, the combined center of gravity should never be at line B-C.

2. The addition of additional counterweight will cause the truck center of gravity to shift toward point A and result in a truck that is less stable laterally.

(b) When the vehicle's line of action, or load center, falls within the stability triangle, the vehicle is stable and will not tip over. However, when the vehicle's line of action or the vehicle/load combination falls outside the stability triangle, the vehicle is unstable and may tip over.

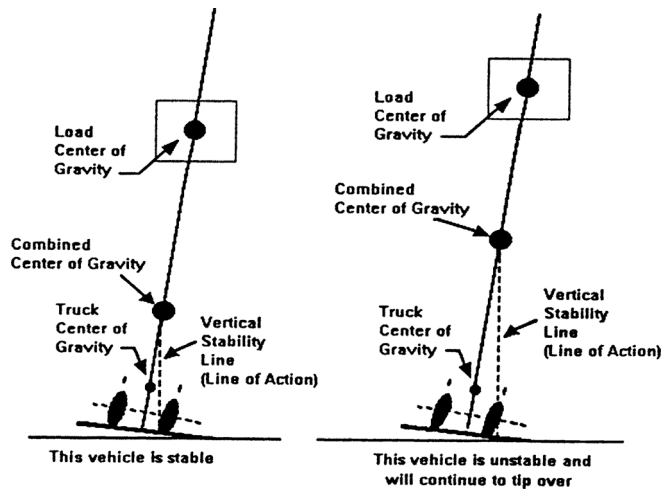

Figure 2

(5) **Longitudinal stability.**

(a) The axis of rotation when a truck tips forward is the front wheels' points of contact with the pavement. When a powered industrial truck tips forward, the truck will rotate about this line. When a truck is stable, the vehicle-moment must exceed the load-moment. As long as the vehicle-moment is equal to or exceeds the load-moment, the vehicle will not tip over. On the other hand, if the load-moment slightly exceeds the vehicle-moment, the truck will begin to tip forward, thereby causing the rear to lose contact with the floor or ground and resulting in loss of steering control. If the load-moment greatly exceeds the vehicle-moment, the truck will tip forward.

(b) To determine the maximum safe load-moment, the truck manufacturer normally rates the truck at a maximum load at a given distance from the front face of the forks. The specified distance from the front face of the forks to the line of action of the load is commonly called the load center. Because larger trucks normally handle loads that are physically larger, these vehicles have greater load centers. Trucks with a capacity of 30,000 pounds or less are normally rated at a given load weight at a 24-inch load center. Trucks with a capacity greater than 30,000 pounds are normally rated at a given load weight at a 36- or 48-inch load center. To safely operate the vehicle, the operator should always check the data plate to determine the maximum allowable weight at the rated load center.

(c) Although the true load-moment distance is measured from the front wheels, this distance is greater than the distance from the front face of the forks. Calculating the maximum allowable load-moment using the load-center distance always provides a lower load-moment than the truck was designed to handle. When handling unusual loads, such as those that are larger than 48 inches long (the center of gravity is greater than 24 inches) or that have an offset center of gravity, etc., a maximum allowable load-moment should be calcu-

lated and used to determine whether a load can be safely handled. For example, if an operator is operating a 3,000-pound capacity truck (with a 24-inch load center), the maximum allowable load-moment is 72,000 inch-pounds (3,000 times 24). If a load is 60 inches long (30-inch load center), then the maximum that this load can weigh is 2,400 pounds (72,000 divided by 30).

(6) **Lateral stability.**

(a) The vehicle's lateral stability is determined by the line of action's position (a vertical line that passes through the combined vehicle's and load's center of gravity) relative to the stability triangle. When the vehicle is not loaded, the truck's center of gravity location is the only factor to be considered in determining the truck's stability. As long as the line of action of the combined vehicle's and load's center of gravity falls within the stability triangle, the truck is stable and will not tip over. However, if the line of action falls outside the stability triangle, the truck is not stable and may tip over. Refer to Figure 3.

(b) Factors that affect the vehicle's lateral stability include the load's placement on the truck, the height of the load above the surface on which the vehicle is operating, and the vehicle's degree of lean.

(7) **Dynamic stability.**

(a) Up to this point, the stability of a powered industrial truck has been discussed without considering the dynamic forces that result when the vehicle and load are put into motion. The weight's transfer and the resultant shift in the center of gravity due to the dynamic forces created when the machine is moving, braking, cornering, lifting, tilting, and lowering loads, etc., are important stability considerations.

(b) When determining whether a load can be safely handled, the operator should exercise extra caution when handling loads that cause the vehicle to approach its maximum design characteristics. For example, if an operator must handle a maximum load, the load should be carried at the lowest position possible, the truck should be accelerated slowly and evenly, and the forks should be tilted forward cautiously. However, no precise rules can be formulated to cover all of these eventualities.

[Statutory Authority: RCW 49.17.010, [49.17].040 and [49.17].050. WSR 00-01-176, § 296-307-52030, filed 12/21/99, effective 3/1/00.]

WAC 296-307-52031 What requirements apply to operating powered industrial trucks? (1) No operator may drive a truck up to anyone standing in front of a fixed object.

(2) No one may stand or pass under the elevated portion of any truck, whether loaded or empty.

(3) Employers must not allow people to ride on powered industrial trucks unless a safe place to ride is provided.

(4) Employers must prohibit employees from placing any body parts between the uprights of the mast or outside the running lines of the truck.

(5) When an operator leaves a powered industrial truck unattended:

(a) The load must be fully lowered;

(b) The controls must be neutralized;

(c) The power must be shut off; and

(d) The brakes must be set.

(e) If the truck is parked on an incline, the wheels must be blocked.

A powered industrial truck is "unattended" when the operator is 25 feet or more away from the vehicle, which remains in view, or whenever the operator leaves the vehicle and it is not in view.

(6) When a truck operator is dismounted, within 25 feet of the truck, and still in view, the load must be fully lowered, the controls must be neutralized, and the brakes must be set to prevent movement.

(7) The operator must maintain a safe distance from the edge of ramps or platforms while operating on any elevated dock, or platform or freight car.

(8) There must be enough headroom for trucks to operate under overhead installations, lights, pipes, sprinkler systems, or other overhead projections.

(9) An active operator protection restraint device (such as a seatbelt or lap-bar) or system must be used, when provided.

[Statutory Authority: RCW 49.17.010, [49.17].040 and [49.17].050. WSR 00-01-176, § 296-307-52031, filed 12/21/99, effective 3/1/00. WSR 97-09-013, recodified as § 296-307-52031, filed 4/7/97, effective 4/7/97. Statutory Authority: RCW 49.17.040, [49.17.]050 and [49.17.]060. WSR 96-22-048, § 296-306A-52031, filed 10/31/96, effective 12/1/96.]

WAC 296-307-52033 When may trucks be used to open or close freight car doors? Trucks may only be used for opening or closing freight car doors with an approved device that meets the following requirements:

(1) The door opening or closing device requires that the force applied by the device to the door is parallel to the door travel.

(2) The truck operator is trained in the use of the door opening or closing device and keeps the operation in full view while opening and closing.

(3) The area is clear of people while the door is moved with a device.

[WSR 97-09-013, recodified as § 296-307-52033, filed 4/7/97, effective 4/7/97. Statutory Authority: RCW 49.17.040, [49.17.]050 and [49.17.]060. WSR 96-22-048, § 296-306A-52033, filed 10/31/96, effective 12/1/96.]

WAC 296-307-52035 What requirements apply to lifting employees on the forks of trucks? Employees may be lifted on the lifting carriage or forks of a powered industrial truck under the following conditions:

(1) The truck is equipped with vertical only, or vertical and horizontal controls elevatable with the lifting carriage or forks.

(2) A safety platform is firmly secured to the lifting carriage and/or forks.

(3) Employees on the platform have a mechanism to shut off power to the truck.

(4) Employees on the platform are protected from falling objects according to the operating conditions.

[WSR 97-09-013, recodified as § 296-307-52035, filed 4/7/97, effective 4/7/97. Statutory Authority: RCW 49.17.040, [49.17.]050 and [49.17.]060. WSR 96-22-048, § 296-306A-52035, filed 10/31/96, effective 12/1/96.]

WAC 296-307-52037 What requirements apply to using platforms for hoisting employees? A platform built specifically for hoisting people may be used to lift employees when:

(1) The platform is securely attached to the forks and has standard guardrails and toeboards installed on all sides.

(2) The hydraulic system is designed so that the lift mechanism will not drop faster than 135 feet per minute in the event of a failure in any part of the system. Forklifts used for elevating work platforms are identified as meeting this requirement.

(3) A safety strap is installed or the control lever is locked to prevent the boom from tilting.

(4) An operator attends the lift equipment while employees are on the platform.

(5) The operator is in the normal operating position while raising or lowering the platform.

(6) The vehicle remains stationary while employees are on the platform.

Exception: Inching or maneuvering at very slow speed is permissible.

(7) The area between employees on the platform and the mast is adequately guarded to prevent contact with chains or other shear points.

[WSR 97-09-013, recodified as § 296-307-52037, filed 4/7/97, effective 4/7/97. Statutory Authority: RCW 49.17.040, [49.17.]050 and [49.17.]060. WSR 96-22-048, § 296-306A-52037, filed 10/31/96, effective 12/1/96.]

WAC 296-307-52039 What requirements apply to traveling in a powered industrial truck? (1) The operator must maintain a safe distance of approximately three truck lengths from the truck ahead. The truck must be kept under control at all times.

(2) The operator must yield the right of way to ambulances, fire trucks, or other vehicles in emergency situations.

(3) Passing other trucks traveling in the same direction at intersections, blind spots, or other dangerous locations is prohibited.

(4) Railroad tracks must be crossed diagonally wherever possible. The operator must not park closer than 8 feet from the center of railroad tracks.

(5) The operator must look in the direction of, and keep a clear view of, the path of travel.

(6) Stunt driving and horseplay are prohibited.

(7) The operator must approach elevators slowly, and then enter squarely after the elevator car is properly leveled. Once on the elevator, the operator must neutralize controls, shut off power, and set the brakes.

(8) Motorized hand trucks must enter elevator or other confined areas with load end forward.

(9) The operator must avoid running over loose objects on the roadway surface.

(10) Access to fire aisles, stairways, and fire equipment must be kept clear.

[Statutory Authority: RCW 49.17.010, [49.17].040 and [49.17].050. WSR 00-01-176, § 296-307-52039, filed 12/21/99, effective 3/1/00. WSR 97-09-013, recodified as § 296-307-52039, filed 4/7/97, effective 4/7/97. Statutory Authority: RCW 49.17.040, [49.17.]050 and [49.17.]060. WSR 96-22-048, § 296-306A-52039, filed 10/31/96, effective 12/1/96.]

WAC 296-307-52041 What requirements apply to traveling speeds of powered industrial trucks? (1) The operator must observe all traffic regulations, including authorized plant speed limits.

(2) The operator must slow down and sound the horn at cross aisles and other locations where vision is obstructed. If the load obstructs a forward view, the driver must travel with the load trailing.

Exception: If traveling with the load trailing creates new hazards, it is not required.

(3) The operator must ascend and descend grades slowly.

(a) At grades over 10 percent, loaded trucks must be driven with the load upgrade.

(b) Unloaded trucks should be operated on all grades with the load carrier downgrade.

(c) On all grades the load and load carrier must be tilted back if applicable, and raised only as far as necessary to clear the road surface.

(4) Under all travel conditions, the truck must be operated at a speed that will permit it to be stopped safely.

(5) The driver must slow down for wet and slippery floors.

(6) While negotiating turns, the operator must slow to a safe speed and turn the wheel in a smooth, sweeping motion.

[WSR 97-09-013, recodified as § 296-307-52041, filed 4/7/97, effective 4/7/97. Statutory Authority: RCW 49.17.040, [49.17.]050 and [49.17.]060. WSR 96-22-048, § 296-306A-52041, filed 10/31/96, effective 12/1/96.]

WAC 296-307-52043 What requirements apply to loading powered industrial trucks? (1) All loads must be stable or safely arranged. Exercise caution when handling off-center loads that cannot be centered.

(2) All loads must be within the rated capacity of the truck.

(3) Take care securing, manipulating, positioning, and transporting loads when attachments are used. Trucks with attachments must be operated as partially loaded trucks when not handling a load.

(4) Place the load carrier under the load as far as possible. Tilt the mast backward to stabilize the load.

(5) Use extreme care when tilting the load forward or backward, particularly when high tiering. Avoid tilting the load forward with the load carrier elevated except to pick up a load, or when the load is in a deposit position over a rack or stack. When stacking or tiering, use only enough backward tilt to stabilize the load.

[WSR 97-09-013, recodified as § 296-307-52043, filed 4/7/97, effective 4/7/97. Statutory Authority: RCW 49.17.040, [49.17.]050 and [49.17.]060. WSR 96-22-048, § 296-306A-52043, filed 10/31/96, effective 12/1/96.]

WAC 296-307-52045 What requirements apply to servicing powered industrial trucks? (1) Powered industrial trucks that need repairs, are defective, or in any way unsafe must be taken out of service until restored to safe operating condition.

(2) Stop the engine before filling fuel tanks. Avoid spilling fuel.

(3) When oil or fuel spills, wash the spill away carefully or evaporate the spill completely and replace the fuel tank cap before restarting engine.

(4) No truck may be operated with a leak in the fuel system.

(5) Open flames are prohibited for checking electrolyte level in storage batteries or gasoline level in fuel tanks.

[WSR 97-09-013, recodified as § 296-307-52045, filed 4/7/97, effective 4/7/97. Statutory Authority: RCW 49.17.040, [49.17.]050 and [49.17.]060. WSR 96-22-048, § 296-306A-52045, filed 10/31/96, effective 12/1/96.]

WAC 296-307-52047 What requirements apply to maintaining powered industrial trucks? (1) Powered industrial trucks must be removed from service when not in safe operating condition. All repairs must be made by an authorized employee.

(2) No repairs may be made in Class I, II, and III locations.

(3) When repairs to fuel and ignition systems of industrial trucks involve fire hazards, the repairs must be conducted only in designated locations.

(4) Trucks in need of repairs to the electrical system must have the battery disconnected prior to repair.

(5) Industrial truck parts must be replaced only by parts of equivalent safety.

(6) Industrial trucks must not be altered so that the relative positions of parts are different from when they were manufactured. Industrial trucks must not have parts added or eliminated, except as provided in WAC 296-307-52005. Fork trucks must not have additional counterweighting added unless approved by the truck manufacturer.

(7) Industrial trucks must be examined at least daily before being placed in service. Industrial trucks must not be placed in service if the examination shows any unsafe condition.

Where industrial trucks are used on a round-the-clock basis, they shall be examined after each shift. Defects must be immediately reported and corrected.

(8) Water mufflers must be filled daily or as frequently as necessary to prevent the water supply from dropping below 75 percent. Vehicles must not be operated if muffler screens or other parts are clogged. Any vehicle that emits hazardous sparks or flames from the exhaust system must immediately be removed from service until the emission of such sparks and flames has been eliminated.

(9) When the temperature of any part of any truck exceeds its normal operating temperature, the vehicle must be removed from service until the cause for overheating has been eliminated.

(10) Industrial trucks must be kept clean and free of excess accumulations of combustible materials, oil, and grease. Noncombustible agents should be used for cleaning trucks. Low flash point (below 100°F) solvents must not be used. High flash point (at or above 100°F) solvents may be used. Take precautions regarding toxicity, ventilation, and fire hazard according to the agent or solvent used.

(11) Industrial trucks originally approved to use gasoline fuel may be converted to use LP-gas fuel if the converted truck has the features specified for LP or LPS designated trucks. The converted equipment must be approved. You may find a description of the conversion system and the recommended method of installation in the "listed by report" of a nationally recognized testing laboratory.

[Statutory Authority: RCW 49.17.010, [49.17].040 and [49.17].050. WSR 00-01-176, § 296-307-52047, filed 12/21/99, effective 3/1/00. Statutory Authority: RCW 49.17.040. WSR 98-24-096, § 296-307-52047, filed 12/1/98, effective 3/1/99. WSR 97-09-013, recodified as § 296-307-52047, filed 4/7/97, effective 4/7/97. Statutory Authority: RCW 49.17.040, [49.17.]-050 and [49.17.]060. WSR 96-22-048, § 296-306A-52047, filed 10/31/96, effective 12/1/96.]

Part X

Rim Wheel Servicing

WAC 296-307-530 Rim wheel servicing.

[WSR 97-09-013, recodified as § 296-307-530, filed 4/7/97, effective 4/7/97. Statutory Authority: RCW 49.17.040, [49.17.]050 and [49.17.]060. WSR 96-22-048, § 296-306A-530, filed 10/31/96, effective 12/1/96.]

WAC 296-307-53001 What does this section cover? WAC 296-307-530 applies to the servicing of multipiece and single-piece rim wheels used on large vehicles such as trucks, tractors, trailers, buses and off-road machines. It does not apply to servicing rim wheels used on automobiles, or on pickup trucks and vans with automobile tires or truck tires designated "LT."

[Statutory Authority: RCW 49.17.040. WSR 98-24-096, § 296-307-53001, filed 12/1/98, effective 3/1/99. WSR 97-09-013, recodified as § 296-307-53001, filed 4/7/97, effective 4/7/97. Statutory Authority: RCW 49.17.040, [49.17.]050 and [49.17.]060. WSR 96-22-048, § 296-306A-53001, filed 10/31/96, effective 12/1/96.]

WAC 296-307-53003 What definitions apply to rim wheel servicing? "Barrier" means a fence, wall, or structure placed between a single-piece rim wheel and an employee during tire inflation, to contain the rim wheel components in the event of the sudden release of the contained air of the single-piece rim wheel.

"Charts" means the United States Department of Labor, Occupational Safety and Health Administration (OSHA) publications entitled "Demounting and Mounting Procedures for Truck/Bus Tires" and "Multi-Piece Rim Matching Chart," the National Highway Traffic Safety Administration (NHTSA) publications entitled "Demounting and Mounting Procedures for Truck/Bus Tires" and "Multi-Piece Rim Matching Chart," or any other poster that contains at least the same instructions, safety precautions and other information contained in the charts that is applicable to the types of wheels being serviced.

"Installing a rim wheel" means the transfer and attachment of an assembled rim wheel onto a vehicle axle hub. "Removing" means the opposite of installing.

"Mounting a tire" means the assembly or putting together of the wheel and tire components to form a rim wheel, including inflation. "Demounting" means the opposite of mounting.

"Multipiece rim wheel" means the assembly of a multipiece wheel with the tire tube and other components.

"Multipiece wheel" means a vehicle wheel consisting of two or more parts, one of which is a side or locking ring designed to hold the tire on the wheel by interlocking components, when the tire is inflated.

"Restraining device" means a cage, rack, assembly of bars, or other components that will constrain all rim wheel components during an explosive separation of a multipiece rim wheel, or during the sudden release of the contained air of a single-piece rim wheel.

"Rim manual" means a publication containing instructions from the manufacturer or other qualified organization

for correct mounting, demounting, maintenance, and safety precautions peculiar to the type of wheel being serviced.

"Rim wheel" means an assembly of tire, tube and liner (where appropriate), and wheel components.

"Service" or "servicing" means the mounting and demounting of rim wheels, and related activities such as inflating, deflating, installing, removing, and handling.

"Service area" means that part of an employer's premises used for the servicing of rim wheels, or any other place where an employee services rim wheels.

"Single-piece rim wheel" means the assembly of single-piece rim wheel with the tire and other components.

"Single-piece wheel" means a vehicle wheel consisting of one part, designed to hold the tire on the wheel when the tire is inflated.

"Trajectory" means:

• Any potential path that a rim wheel component may travel during an explosive separation, or the sudden release of the pressurized air; or

• An area at which an air blast from a single-piece rim wheel may be released.

The trajectory may deviate from paths that are perpendicular to the assembled position of the rim wheel. (See Figure for examples of trajectories.)

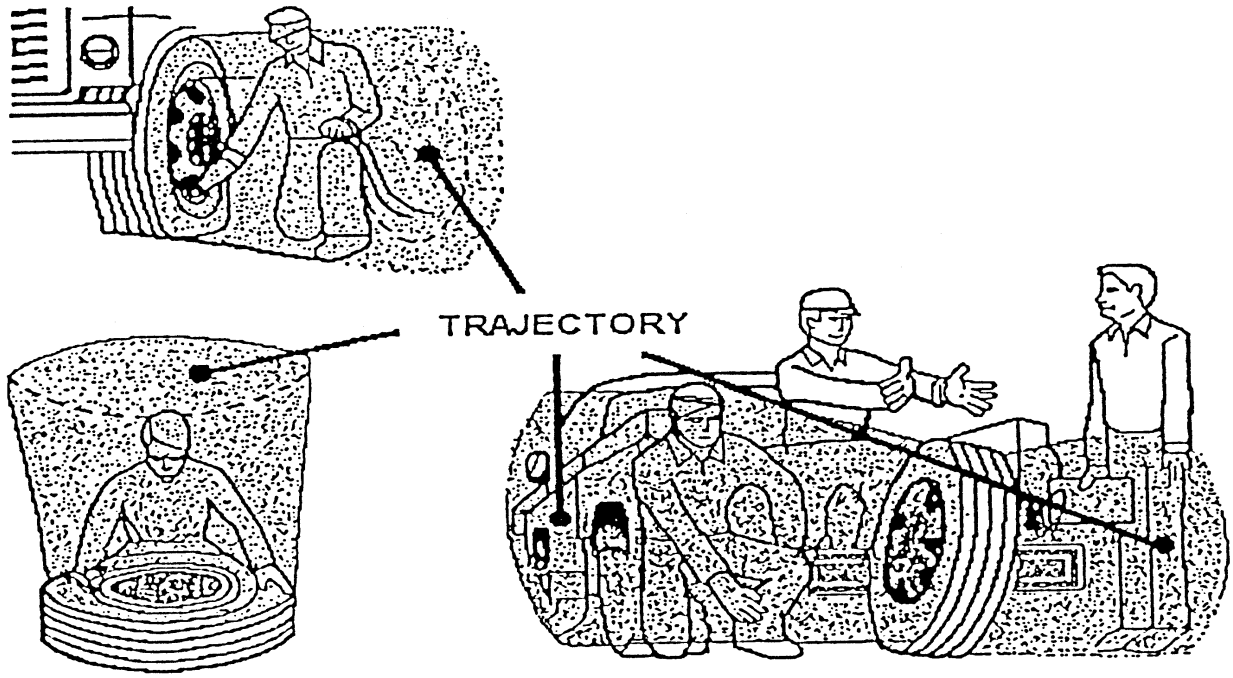

"Wheel" means the part of a rim wheel that provides the method of attachment of the assembly to the axle of a vehicle and also provides the means to contain the inflated portion of the assembly (i.e., the tire and/or tube).

[WSR 97-09-013, recodified as § 296-307-53003, filed 4/7/97, effective 4/7/97. Statutory Authority: RCW 49.17.040, [49.17.]050 and [49.17.]060. WSR 96-22-048, § 296-306A-53003, filed 10/31/96, effective 12/1/96.]

WAC 296-307-53005 What training must an employer provide for employees who service rim wheels? (1) You must implement a training program that covers at least the following:

(a) The hazards involved in servicing rim wheels;

(b) The safe operating procedures for the types of wheel serviced, described in WAC 296-307-53013 and 296-307-53015; and

(c) The applicable data contained in the charts (rim manuals) and the contents of this standard.

(2) You must ensure that each employee demonstrates and maintains the ability to service rim wheels safely, including the following:

(a) Demounting tires (including deflation);

(b) Inspecting and identifying the rim wheel components;

(c) Mounting tires (including inflation with a restraining device or other safeguard required by this section);

(d) Using the restraining device and other equipment required by this section;

(e) Handling rim wheels;

(f) Inflating the tire when a single-piece rim wheel is mounted on a vehicle;

(g) Understanding the necessity of standing outside the trajectory both during inflation of the tire and during inspection of the rim wheel following inflation; and

(h) Installing and removing rim wheels.

(3) If you believe that any employee is unable to read and understand the charts or rim manual, you must instruct the employee in the contents of the charts and rim manual in a manner that the employee can understand.

(4) You must evaluate each employee's ability to perform these tasks safely, and provide additional training as necessary to ensure that each employee maintains proficiency.

[Statutory Authority: RCW 49.17.040. WSR 98-24-096, § 296-307-53005, filed 12/1/98, effective 3/1/99. WSR 97-09-013, recodified as § 296-307-53005, filed 4/7/97, effective 4/7/97. Statutory Authority: RCW 49.17.040, [49.17.]050 and [49.17.]060. WSR 96-22-048, § 296-306A-53005, filed 10/31/96, effective 12/1/96.]

WAC 296-307-53007 What requirements apply to restraining devices? (1) You must furnish a restraining device for inflating tires on multipiece wheels.

(2) You must provide a restraining device for inflating tires on single-piece wheels unless the rim wheel will be bolted onto a vehicle during inflation.

(3) Restraining devices must:

(a) Withstand the force of a rim wheel separation occurring at 150% of the maximum tire pressure for the rim wheel being serviced.

(b) Prevent the rim wheel components from being thrown out of the device.

(c) The restraining device is visually inspected before each day's use and after any rim wheel separation or sudden release of contained air. Any damaged restraining device is immediately removed from service.

(d) If the restraining device is removed from service, it is not returned to service until repaired and reinspected. If the restraining device requires structural repair, it is not returned to service until certified by either the manufacturer or a registered professional engineer to meet the strength requirements of (a) of this subsection.

[WSR 97-09-013, recodified as § 296-307-53009, filed 4/7/97, effective 4/7/97. Statutory Authority: RCW 49.17.040, [49.17.]050 and [49.17.]060. WSR 96-22-048, § 296-306A-53007, filed 10/31/96, effective 12/1/96.]

WAC 296-307-53009 What other equipment must an employer provide for rim wheel servicing? (1) You must furnish an air line assembly and ensure that employees use it for inflating tire.

(2) The air line assembly must contain the following components:

(a) A clip-on chuck;

(b) An in-line valve with a pressure gauge or a presettable regulator; and

(c) Enough hose between the clip-on chuck and the in-line valve (if one is used) to allow the employee to stand outside the trajectory.

(3) Current charts or rim manuals for the types of wheels being serviced shall be available in the service area.

(4) You must furnish the tools recommended in the rim manual for the type of wheel being serviced and ensure that they are the only tools used to service rim wheels.

[WSR 97-09-013, recodified as § 296-307-53009, filed 4/7/97, effective 4/7/97. Statutory Authority: RCW 49.17.040, [49.17.]050 and [49.17.]060. WSR 96-22-048, § 296-306A-53009, filed 10/31/96, effective 12/1/96.]

WAC 296-307-53011 What requirements apply to wheel component assembly? (1) You must ensure that multipiece wheel components are not interchanged except as provided in the charts or rim manual.

(2) Multipiece wheel components and single-piece wheels must be inspected prior to assembly. Any wheel or wheel component that is bent out of shape, pitted from corrosion, broken, or cracked shall not be used. Mark damaged wheels or components "unserviceable" and remove from the service area. Replace damaged or leaky valves.

(3) Rim flanges, rim gutters, rings, bead seating surfaces and the bead areas of tires must be free of any dirt, surface rust, scale or loose or flaked rubber build-up prior to mounting and inflation.

(4) The size (bead diameter and tire/wheel widths) and type of both the tire and the wheel must be checked for compatibility before assembly.

[WSR 97-09-013, recodified as § 296-307-53011, filed 4/7/97, effective 4/7/97. Statutory Authority: RCW 49.17.040, [49.17.]050 and [49.17.]060. WSR 96-22-048, § 296-306A-53011, filed 10/31/96, effective 12/1/96.]

WAC 296-307-53013 What are the safe operating procedures for servicing multipiece rim wheels? You must establish safe operating procedures for servicing multipiece rim wheels, and ensure that employees are instructed in and follow the procedures. Your procedures must include at least the following:

(1) Before demounting, remove the valve core to completely deflate the tire.

(2) Remove the valve core to completely deflate the tire before removing a rim wheel from the axle whenever:

(a) The tire has been driven on underinflated at eighty percent or less of its recommended pressure; or

(b) There is obvious or suspected damage to the tire or wheel components.

(3) Apply rubber lubricant to bead and rim mating surfaces during wheel assembly and tire inflation, unless the tire or wheel manufacturer recommends against it.

(4) A tire on a vehicle underinflated at more than eighty percent of the recommended pressure may be inflated while the rim wheel is on the vehicle, only if remote control inflation equipment is used and no employees remain in the trajectory during inflation.

(5) Tires may be inflated outside a restraining device only to pressure sufficient to force the tire bead onto the rim ledge and to create an airtight seal with the tire and bead.

(6) Whenever a rim wheel is in a restraining device, the employee must not rest any part of the body or equipment on the restraining device.

(7) After tire inflation, inspect the tire and wheel components while still within the restraining device. Ensure that they are properly seated and locked. If further adjustment to the tire or wheel components is necessary, deflate the tire by removing the valve core before making adjustments.

(8) Never correct the seating of side and lock rings by hammering, striking, or forcing the components while the tire is pressurized.

(9) Cracked, broken, bent, or otherwise damaged rim components shall not be reworked, welded, brazed, or otherwise heated.

(10) When handling multipiece rim wheels, employees must stay out of the trajectory unless the performance of the servicing makes the employee's presence in the trajectory necessary.

(11) Do not apply heat to a multipiece wheel or wheel component.

[WSR 97-09-013, recodified as § 296-307-53013, filed 4/7/97, effective 4/7/97. Statutory Authority: RCW 49.17.040, [49.17.]050 and [49.17.]060. WSR 96-22-048, § 296-306A-53013, filed 10/31/96, effective 12/1/96.]

WAC 296-307-53015 What are the safe operating procedures for servicing single-piece rim wheels? You must establish safe operating procedures for servicing single-piece rim wheels, and ensure that employees are instructed in and follow the procedures. Your procedures must include at least the following:

(1) Before demounting, remove the valve core to completely deflate the tire.

(2) Mount and demount tires only from the narrow ledge side of the wheel. Take care to avoid damaging the tire beads while mounting. Only mount tires on compatible wheels of matching bead diameter and width.

(3) Apply nonflammable rubber lubricant to bead and wheel mating surfaces before rim wheel assembly, unless the tire or wheel manufacturer recommends against it.

(4) When using a tire changing machine, inflate tires only to the minimum pressure necessary to force the tire bead onto the rim ledge while on the tire changing machine.

(5) When using a bead expander, remove the bead expander before the valve core is installed and as soon as the rim wheel becomes airtight (the tire bead slips onto the bead seat).

(6) Always inflate tires within a restraining device, positioned behind a barrier, or bolted on the vehicle with the lug nuts fully tightened.

(7) Inflate tires only when the trajectory area is clear of flat, solid objects.

(8) Employees stay out of the trajectory when inflating a tire.

(9) Tires must not be inflated to more than the inflation pressure stamped in the sidewall unless a higher pressure is recommended by the manufacturer.

(10) Tires must not be inflated above the maximum pressure recommended by the manufacturer to seat the tire bead firmly against the rim flange.

(11) Heat must not be applied to a single-piece wheel.

(12) Cracked, broken, bent, or otherwise damaged wheels must not be reworked, welded, brazed, or otherwise heated.

[WSR 97-09-013, recodified as § 296-307-53015, filed 4/7/97, effective 4/7/97. Statutory Authority: RCW 49.17.040, [49.17.]050 and [49.17.]060. WSR 96-22-048, § 296-306A-53015, filed 10/31/96, effective 12/1/96.]

WAC 296-307-53017 How can an employer order the OSHA charts? OSHA charts are available through OSHA area offices. You may find the address and telephone number of the nearest OSHA office in the local telephone directory under U.S. Government, U.S. Department of Labor, Occupational Safety and Health Administration. Single copies are available without charge.

If you want multiple copies of these charts, you may order them from the Publications Office, U.S. Department of Labor, Room N3101, Washington, D.C. 20210. Telephone: (202) 523-9667.

[WSR 97-09-013, recodified as § 296-307-53017, filed 4/7/97, effective 4/7/97. Statutory Authority: RCW 49.17.040, [49.17.]050 and [49.17.]060. WSR 96-22-048, § 296-306A-53017, filed 10/31/96, effective 12/1/96.]

Part Y

Occupational Health Standards

Part Y-1

Employer Chemical Hazard Communication

WAC 296-307-550 Employer chemical hazard communication—Introduction. Important:

Thousands of chemicals can be found in today's workplaces. These chemicals may have the capacity to cause health problems, from minor skin irritations to serious injuries or diseases like cancer.

The employer chemical hazard communication rule was developed to make sure employers and employees are informed about chemical hazards in the workplace.

This rule applies to:

• Employers engaged in businesses where chemicals are used, distributed, or produced for use or distribution.

• Contractors or subcontractors that work for employers engaged in businesses where chemicals are used, distributed, or produced for use or distribution.

Note:
- If you produce, import, distribute and/or repackage chemicals, or choose not to rely on labels or material safety data sheets provided by the manufacturer or importer, you must comply with Material safety data sheets and label preparation, WAC 296-307-560 through 296-307-56050.
- You may withhold trade secret information under certain circumstances, see Trade secrets, WAC 296-62-053, to find out what information may be withheld as a trade secret and what information must be released.
- WAC 296-307-550, Part Y-1, Employer Chemical Hazard Communication, has been changed and replaced by WAC 296-901-140, Hazard communication. However, there are several implementation dates which are listed below and during the transitions employers can comply with this chapter or WAC 296-901-140, Hazard communication until completion of each effective date.

Effective Completion Date	Requirement(s)	Who
June 1, 2014	Train employees on the new label elements and safety data sheet (SDS) format.	Employers
June 1, 2015 December 1, 2015	Compliance with all modified provisions of this final rule, except: The distributor shall not ship containers labeled by the chemical manufacturer or importer unless it is a GHS label	Chemical manufacturers, importers, distributors, and employers
June 1, 2016	Update alternative workplace labeling and hazard communication program as necessary, and provide additional employee training for newly identified physical or health hazards.	Employers

Effective Completion Date	Requirement(s)	Who
Transition period to the effective completion dates noted above.	May comply with the applicable requirements in the following rules: Chapter 296-307 WAC, Part Y-1, Employer Chemical Hazard Communication. Chapter 296-307 WAC, Part Y-2, Material Safety Data Sheets and Label Preparation. WAC 296-901-140, Hazard communication.	Chemical manufacturers, importers, distributors, and employers

EXEMPTIONS: •For the purposes of this employer hazard communication rule, if you are engaged in agricultural production of crops or livestock, "employee" does not mean:

- Immediate family members of the officers of any corporation, partnership, sole proprietorship or other business entity or officers of any closely held corporation.

•Certain products, chemicals, or items are exempt from this rule. Below is a summarized list of these exemptions. See WAC 296-307-55055 at the end of this rule to get complete information about these exemptions:

- Any hazardous waste or substance
- Tobacco or tobacco products
- Wood or wood products that are not chemically treated and will not be processed, for example, by sawing and sanding
- Food or alcoholic beverages
- Some drugs, such as retail or prescription medications
- Retail cosmetics
- Ionizing and nonionizing radiation
- Biological hazards
- Any consumer product or hazardous substance when workplace exposure is the same as that of a consumer

■ Retail products used in offices in the same manner and frequency used by consumers can be termed "consumer products." Consumer products include things such as: Correction fluid, glass cleaner, and dishwashing liquid.

Example: If you use a household cleaner in your workplace in the same way that a consumer would use it when cleaning their house, the exposure should be the same as the consumer's. ("In the same way" means using the household cleaner in the same manner and frequency.) A janitor using a household cleaner, such as bleach, throughout the day, is not considered to be consumer use.

- Manufactured items that remain intact are exempt for this rule.

The following are examples:

Item	Covered by this rule	Not covered by this rule
Brick	sawed or cut in half	used whole or intact
Pipe	cut by a torch	bent with a tube bender
Nylon rope	burning the ends	tying a knot

- Manufactured items that are fluids or in the form of particles are not exempt for this rule.

Your responsibility:

To inform and train your employees about the hazards of chemicals they may be exposed to during normal working conditions, or in foreseeable emergencies by:

• Making a list of the hazardous chemicals present in your workplace

• Preparing a written Chemical Hazard Communication Program for your workplace

• Informing your employees about this rule and your program

• Providing training to your employees about working in the presence of hazardous chemicals

• Getting and keeping the material safety data sheets (MSDSs) for the hazardous chemicals

• Making sure that labels on containers of hazardous chemicals are in place and easy to read

You must:

Develop, implement, maintain, and make available a written Chemical Hazard Communication Program

WAC 296-307-55005

Identify and list all the hazardous chemicals present in your workplace

WAC 296-307-55010

Obtain and maintain material safety data sheets (MSDSs) for each hazardous chemical used

WAC 296-307-55015

Make sure that material safety data sheets (MSDSs) are readily accessible to your employees

WAC 296-307-55020

Label containers holding hazardous chemicals

WAC 296-307-55025

Inform and train your employees about hazardous chemicals in your workplace

WAC 296-307-55030

Follow these rules for laboratories using hazardous chemicals

WAC 296-307-55035

Follow these rules for handling chemicals in factory sealed containers

WAC 296-307-55040

The department must:

Translate certain chemical hazard communication documents upon request

WAC 296-307-55045

Attempt to obtain a material safety data sheet (MSDS) upon request

WAC 296-307-55050

Exemption: Items or chemicals exempt from the rule, and exemptions from labeling

WAC 296-307-55055

Definitions

WAC 296-307-55060

[Statutory Authority: RCW 49.17.010, 49.17.040, 49.17.050, 49.17.060, and chapter 49.17 RCW. WSR 15-13-097, § 296-307-550, filed 6/16/15, effective 8/3/15. Statutory Authority: RCW 49.17.010, 49.17.040, 49.17.050, 49.17.060. WSR 05-01-166, § 296-307-550, filed 12/21/04, effective 4/2/05. Statutory Authority: RCW 49.17.010, [49.17].040, and [49.17].050. WSR 01-17-033, § 296-307-550, filed 8/8/01, effective 9/1/01.]

WAC 296-307-55005 Develop, implement, maintain, and make available a written Chemical Hazard Communication Program. You must:

• Develop, implement, maintain, and make available a written Chemical Hazard Communication Program specifically for your workplace. The Chemical Hazard Communication Program must, at a minimum, include:

- A list of hazardous chemicals known to be present in your workplace

- Procedures for making sure all containers are properly labeled

- A description of how you are going to obtain and maintain your material safety data sheets (MSDSs)

- A description of how you are going to train and inform your employees about hazardous chemicals in their workplace

- A description of how you are going to inform your employees about:

♦ Chemical hazards used during nonroutine tasks

♦ The hazards associated with chemicals contained in unlabeled pipes in their work areas

You must:

• Make sure your written Chemical Hazard Communication Program includes the following communication methods you will apply if you produce, use, or store hazardous chemicals at your workplace(s) in such a way that the employees of other employer(s) may be exposed:

- Provide the other employer(s) with a copy of the relevant material safety data sheets (MSDSs), or provide access to the MSDSs in a central location at the workplace

- Inform the other employer(s) of any precautionary measures that need to be taken to protect employees during normal operating conditions and in foreseeable emergencies

- Describe how to inform the other employer(s) of the labeling system used in the workplace

Note:
- Examples of employees of other employers who could be exposed to chemical hazards that you produce, use, or store in your workplace include employees of construction companies, cleaning services, or maintenance contractors visiting or working on-site.
- Your employees have the right to get chemical hazard communication information from other employers at workplaces where they are working; and employees of other employers have the right to get the information from you when they are working at your workplace.
- Include in your written Chemical Hazard Communication Program the methods that you will use to share information with other employers and their employees at your workplace(s) regarding:

  - Access to MSDSs

  - Precautionary measures such as personal protective equipment (PPE) and emergency plans

  - Any labeling systems used at the workplace.

  If you rely on another employer's chemical hazard communication program to share the information required and the program meets the requirements of this rule, document in your own written Chemical Hazard Communication Program.

You must:

• Make your Chemical Hazard Communication Program available to your employees.

Note: Where employees must travel between workplaces during a workshift, that is, if their work is carried out at more than one geographical location, the written Chemical Hazard Communication Program may be kept at the primary workplace facility.

[Statutory Authority: RCW 49.17.010, [49.17].040, and [49.17].050. WSR 01-17-033, § 296-307-55005, filed 8/8/01, effective 9/1/01.]

WAC 296-307-55010 Identify and list all the hazardous chemicals present in your workplace. You must:

• Identify all hazardous chemicals in your workplace. This includes any chemical that is known to be present in your workplace in such a way that employees may be exposed to it under normal conditions of use or in a foreseeable emergency.

• Create a list of these chemicals using the chemical or common name on the material safety data sheet (MSDS). This list:

- Must be compiled for the workplace as a whole, or for individual work areas.

- Is necessary to make sure that all hazardous chemicals are identified and that MSDS, and labeling rules are met.

- Must be current.

Note: The following are some ways to determine whether a product is hazardous:
- Look for words on the label, such as "CAUTION," "WARNING," or "DANGER."
- Look for words or "hazard coding" that indicate that the chemical is flammable, an irritant, corrosive, carcinogenic, etc. "Hazard coding" refers to words, numbers, or colors that tell you a chemical is dangerous.
- Check the product's MSDS for hazard information.

  Examples of hazardous chemicals are: Acids, adhesives, caustics, fuels, paints, varnishes, shellacs and pesticides. Too many other classes of hazardous chemicals exist to list them all here. If you have any questions about a chemical you have at your workplace, contact your local L&I office.

[Statutory Authority: RCW 49.17.010, [49.17].040, and [49.17].050. WSR 01-17-033, § 296-307-55010, filed 8/8/01, effective 9/1/01.]

WAC 296-307-55015 Obtain and maintain material safety data sheets (MSDSs) for each hazardous chemical used.

You must:

• Obtain a MSDS for each hazardous chemical used as soon as possible if the MSDS is not provided with the shipment of a hazardous chemical from the chemical manufacturer or importer.

Note:
- To obtain a MSDS, you may try calling the manufacturer or checking their web site.
- If you have a commercial account with a retailer or wholesaler, you have the right to request and receive a MSDS about hazardous chemicals you purchase.
- If a chemical is purchased from a retailer with no commercial accounts, you have the right to request and receive the manufacturer's name and address so that you can contact them and request a MSDS for the chemical.
- Whoever prepares the MSDS is required to mark all blocks on the form, even if there is no relevant information for that section.
- If you have problems getting a MSDS within 30 calendar days after making a written request to the chemical manufacturer, importer, or distributor, you can get help from WISHA. You may contact your local regional office for assistance or make a written request for assistance to the:
  Department of Labor and Industries
  Right-to-Know Program
  P.O. Box 44610
  Olympia, Washington 98504-4610
- Include in your request:

  - A copy of the purchaser's written request to the chemical manufacturer, importer, or distributor

  - The name of the product suspected of containing a hazardous chemical

  - The identification number of the product, if available

  - A copy of the product label, if available

  - The name and address of the chemical manufacturer, importer, or distributor from whom the product was obtained

You must:

• Maintain a MSDS for each hazardous chemical:

- Keep copies of the required MSDSs for each hazardous chemical present in your workplace. These may be kept in any form, including as a part of operating procedures.

- Each MSDS must be in English. You may also keep copies in other languages.

Note:
- If you choose not to rely on MSDSs or labels provided by the manufacturer or importer, you must comply with the chemical hazard communication standard for manufacturers, importers, and distributors, WAC 296-307-560 through 296-307-56050.
- It may be more appropriate to address the hazards of a process rather than individual hazardous chemicals. MSDSs can be designed to cover groups of hazardous chemicals in a work area.

[Statutory Authority: RCW 49.17.010, 49.17.040, 49.17.050, 49.17.060. WSR 05-01-166, § 296-307-55015, filed 12/21/04, effective 4/2/05. Statutory Authority: RCW 49.17.010, [49.17].040, and [49.17].050. WSR 01-17-033, § 296-370-55015, filed 8/8/01, effective 9/1/01.]

WAC 296-307-55020 Make sure material safety data sheets are readily accessible to your employees. You must:

• Make sure that MSDSs are readily accessible, easily obtained without delay during each work shift to employees when they are in their work area(s).

• Make sure that employees, who must travel between workplaces during a work shift, such as when their work is carried out at more than one geographical location, can immediately obtain the required MSDS information in an emergency. (MSDSs may be kept at a central location at the primary workplace facility and accessed by means such as voice communication or laptop computer.)

Note:
- Electronic access (such as computer or fax), microfiche, and other alternatives to maintaining paper copies of the MSDSs are permitted as long as they do not create barriers to immediate employee access in each workplace.
- Barriers to immediate access of electronic MSDSs may include:
  - Power outages
  - Equipment failure
  - System delays
  - Deficient user knowledge to operate equipment
  - Location of equipment outside the work area
  - Solutions to eliminating these and other possible barriers to access may require the availability of back-up systems, employee training, and providing access equipment in the work areas.

[Statutory Authority: RCW 49.17.010, [49.17].040, and [49.17].050. WSR 01-17-033, § 296-307-55020, filed 8/8/01, effective 9/1/01.]

WAC 296-307-55025 Label containers holding hazardous chemicals.

EXEMPTIONS: The following is a summary of items that are exempt from this rule. For complete information about each of these, see WAC 296-307-55055.

- Pesticides, when labeled as required by the Environmental Protection Agency (EPA)
- Food, food additives, color additives, drugs, cosmetics, or medical/veterinary devices or products
- Alcoholic beverages not intended for industrial use
- Consumer products labeled, as required, by the Consumer Product Safety Commission
- Agriculture or vegetable seeds treated and labeled as required by the Federal Seed Act

Note: You are not required to label portable containers into which hazardous chemicals are transferred from labeled containers, if the chemical is used and controlled by the employee who performed the transfer within the same shift.

You must:

• Make sure that each container of hazardous chemicals in the workplace is labeled, tagged, or marked with the following information:

- The identity of the hazardous chemical(s) using either the chemical or common name

Note: You are not required to list each component in a hazardous mixture on the label. If a mixture is referred to on a material safety data sheet (MSDS) by a product name, then the product name should be used as the identifier.

- Appropriate hazard warnings which give general information about the relevant health and physical hazards of the chemicals. This includes health effects information, such as information about organs most likely to be affected by the chemicals.

EXAMPLES OF LABEL:

Name of Chemical
Physical Hazards
Health Hazards;
• Health effects information
• Affected Target Organs

- For individual stationary process containers, you may use alternate labeling methods such as:

♦ Signs
♦ Placards
♦ Process sheets
♦ Batch tickets
♦ Operating procedures or
♦ Other such written materials, as long as the alternate method identifies the containers and conveys the required label information.

Note:
- You may use words, pictures, symbols or any combination to communicate the hazards of the chemical. Be sure to train your employees so they can demonstrate a knowledge of the labeling system you use.

- Some alternative labeling systems do not communicate target organ information, so the employee will have to rely on training provided by the employer to obtain this information.

You must:

• Not remove or deface existing labels on incoming containers of hazardous chemicals (such as those marked with United States Department of Transportation (USDOT) markings, placards, and labels), unless the container is immediately labeled with the required information. You do not need

to put on new labels if existing labels already provide the required information. If the package or container is sufficiently cleaned of residue and purged of vapors to remove any potential health or physical hazard, existing labels can be removed.

• Make sure that labels or other forms of warning are legible, in English, and prominently displayed on the container, or readily available in the work area throughout each work shift.

Note: • Employers with non-English speaking employees may use other languages in the warning information in addition to the English language.

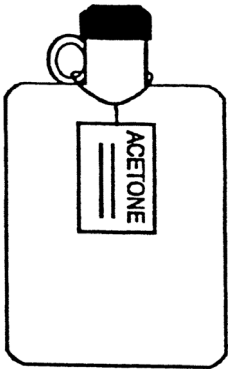

• Above is an example of a labeled container. You may use a laminated or coated label, affixed to the container with a wire, to avoid deterioration of labels due to a solvent, such as acetone.

You must:

• Make sure if the hazardous chemical is regulated by WISHA or OSHA in a substance-specific health rule, that the labels or other warnings are used according to those rules.

[Statutory Authority: RCW 49.17.010, [49.17].040, and [49.17].050. WSR 01-17-033, § 296-307-55025, filed 8/8/01, effective 9/1/01.]

WAC 296-307-55030 Inform and train your employees about hazardous chemicals in your workplace.

Note: The employer chemical hazard communication information and training requirements also apply to pesticides. Employers who have employees who are exposed to pesticides must be in compliance with this rule and the worker protection standards, WAC 296-307-12040.

You must:

• Provide employees with effective information on hazardous chemicals in their work area at the time of their initial job assignment. Whenever a new physical or health hazard related to chemical exposure is introduced into their employees' work areas, information must be provided.

- Inform employees of:

♦ The requirements of this rule.

♦ Any operations in their work area where hazardous chemicals are present.

♦ The location and availability of your written Chemical Hazard Communication Program, including the list(s) of hazardous chemicals and material safety data sheets (MSDSs) required by this rule.

• Provide employees with effective training about hazardous chemicals in their work area at the time of their initial job assignment. Whenever a new physical or health hazard related to chemical exposure is introduced, the employees must be trained.

• Make sure that employee training includes:

- Methods and observations that may be used to detect the presence or release of a hazardous chemical in the work area. Examples of these methods and observations may include:

♦ Monitoring conducted by you

♦ Continuous monitoring devices

♦ Visual appearance or odor of hazardous chemicals when being released

- Physical and health hazards of the chemicals in the work area, including the likely physical symptoms or effects of overexposure

- Steps employees can take to protect themselves from the chemical hazards in your workplace, including specific procedures implemented by you to protect employees from exposure to hazardous chemicals. Specific procedures may include:

■ Appropriate work practices

■ Engineering controls

■ Emergency procedures

■ Personal protective equipment to be used

- Details of the Chemical Hazard Communication Program developed by you, including an explanation of the labeling system and the MSDS, and how employees can obtain and use the appropriate hazard information.

• Tailor information and training to the types of hazards to which employees will be exposed. The information and training may be designed to cover categories of hazards, such as flammability or cancer-causing potential, or it may address specific chemicals. Chemical-specific information must always be available through labels and MSDSs.

• Make reasonable efforts to post notices in your employees' native languages (as provided by the department) if those employees have trouble communicating in English.

Note: • Interactive computer-based training or training videos can be used provided they are effective.

• Your MSDSs may not have WISHA permissible exposure limits (PELs) listed. In some cases, WISHA PELs are stricter than the OSHA PELs and other exposure limits listed on the MSDSs you receive. If this is the case, you must refer to the WISHA PEL table, WAC 296-307-62625, for the appropriate exposure limits to be covered during training.

[Statutory Authority: RCW 49.17.010, 49.17.040, 49.17.050, 49.17.060. WSR 05-01-166, § 296-307-55030, filed 12/21/04, effective 4/2/05; WSR 03-10-068, § 296-307-55030, filed 5/6/03, effective 8/1/03. Statutory Authority: RCW 49.17.010, [49.17].040, and [49.17].050. WSR 01-17-033, § 296-307-55030, filed 8/8/01, effective 9/1/01.]

WAC 296-307-55035 Follow these rules for laboratories using hazardous chemicals.

Note: Laboratories are required to have a written chemical hygiene plan under chapter 296-828 WAC, Hazardous chemicals in laboratories, if applicable. They are not required to have a written Chemical Hazard Communication Program.

You may combine your Accident Prevention Program and Chemical Hazard Communication Program to assist you in developing a Chemical Hygiene Plan for your laboratory.

You must:

(1) Make sure that labels on incoming containers of hazardous chemicals are in place and readable.

(2) Maintain material safety data sheets (MSDSs) received with incoming shipments of hazardous chemicals and make them available to laboratory employees when they are in their work areas.

(3) Provide laboratory employees with information and training as described in: "Inform and train your employees about hazardous chemicals in your workplace," WAC 296-307-55030, except for the part about the location and availability of the written Chemical Hazard Communication Program.

Note: Laboratory employers that ship hazardous chemicals are considered to be either chemical manufacturers or distributors. When laboratory employers ship hazardous chemicals they must comply with the rule, Material safety data sheets and label preparation, WAC 296-307-560 through 296-307-56050.

[Statutory Authority: RCW 49.17.010, 49.17.040, 49.17.050, and 49.17.060. WSR 06-02-060, § 296-307-55035, filed 1/3/06, effective 4/1/06; WSR 05-01-166, § 296-307-55035, filed 12/21/04, effective 4/2/05. Statutory Authority: RCW 49.17.010, [49.17].040, and [49.17].050. WSR 01-17-033, § 296-307-55035, filed 8/8/01, effective 9/1/01.]

WAC 296-307-55040 Follow these rules for handling chemicals in factory-sealed containers. You must:

This applies to situations where employees only handle chemicals in factory-sealed containers that are not opened under normal use (such as those found in marine cargo handling, trucking, warehousing, or retail sales).

You must:

(1) Make sure that labels on incoming containers of hazardous chemicals are in place and readable.

(2) Keep or obtain material safety data sheets.

• Keep any MSDSs that are received with incoming shipments of the sealed containers of hazardous chemicals

• If a factory-sealed container of hazardous chemicals comes without a MSDS, obtain one as soon as possible, if an employee requests it

(3) Make sure that the MSDSs are readily accessible during each work shift to employees when they are in their work area(s).

(4) Inform and train your employees about hazardous chemicals in your workplace, to protect them in case of a hazardous chemical spill or leak from a factory-sealed container. You do not have to cover the location and availability of the written Chemical Hazard Communication Program.

[Statutory Authority: RCW 49.17.010, [49.17].040, and [49.17].050. WSR 01-17-033, § 296-307-55040, filed 8/8/01, effective 9/1/01.]

WAC 296-307-55045 Translate certain chemical hazard communication documents upon request. The department must:

• Upon receipt of a written or verbal request, prepare and make available (within available resources) to employers or the public, a translation into Cambodian, Chinese, Korean, Spanish, or Vietnamese of any of the following:

- An employer's written Chemical Hazard Communication Program

- A material safety data sheet or

- Written materials prepared by the department to inform employees of their rights described in this rule, regarding chemical hazard communication

Note: Written requests for translations should be directed to:
Department of Labor and Industries
Right-to-Know Program
P.O. Box 44610
Olympia, Washington 98504-4610

[Statutory Authority: RCW 49.17.010, [49.17].040, and [49.17].050. WSR 01-17-033, § 296-307-55045, filed 8/8/01, effective 9/1/01.]

WAC 296-307-55050 Attempt to obtain a material safety data sheet (MSDS) upon request. The department must:

• Upon receipt of an employer's written request for a material safety data sheet, attempt to obtain the MSDS from the chemical manufacturer, importer, or distributor. When the department receives the MSDS, the department must forward a copy of it to the purchaser at no cost. Small business employers will be given priority for this service.

[Statutory Authority: RCW 49.17.010, [49.17].040, and [49.17].050. WSR 01-17-033, § 296-307-55050, filed 8/8/01, effective 9/1/01.]

WAC 296-307-55055 Items or chemicals exempt from the rule, and exemptions from labeling.

• Listed below are the full descriptions of the items or chemicals that are exempt, or not covered, by this rule:

- Any consumer product or hazardous substance, defined in the Consumer Product Safety Act (15 U.S.C. 2051 et seq.) and Federal Hazardous Substance Act (15 U.S.C. 1261 et seq.) respectively, where you can show that it is used in the workplace for the purpose intended by the chemical manufacturer or importer of the product, and the use results in a duration and frequency of exposure that is not greater than the range of exposures that could reasonably be experienced by consumers when used for the purpose intended.

- Any hazardous waste, defined by the Hazardous Waste Management Act chapter 70.105 RCW, when subject to regulations issued under that act by the department of ecology, that describes specific safety, labeling, personnel training, and other rules for the accumulation, handling, and management of hazardous waste.

- Any hazardous waste, defined by the Solid Waste Disposal Act, as amended by the Resource Conservation and Recovery Act of 1976, as amended (42 U.S.C. 6901 et seq.), when subject to regulations issued under that act by the Environmental Protection Agency.

- Any hazardous substance, defined by the Comprehensive Environmental Response, Compensation and Liability Act (CERCLA) (42 U.S.C. 9601 et seq.), when the hazardous substance is the focus of remedial or removal action being conducted under CERCLA in accordance with Environmental Protection Agency regulations.

- Tobacco or tobacco products.

- Wood or wood products, including lumber that will not be processed, where the chemical manufacturer or importer can establish that the only hazard they pose to the employees is the potential for flammability or combustibility. Wood or wood products that have been treated with hazardous chemicals covered by this rule, and wood that may be subsequently sawed or cut, generating dust, are not exempt.

- Articles, meaning manufactured items other than a fluid or particle that:

♦ Are formed to a specific shape or design during manufacture;

♦ Have end use function(s) dependent in whole or in part upon their shape or design during end use; and

♦ Under normal conditions of use, do not release more than very small quantities, for example minute or trace amounts of a hazardous chemical such as emissions from a marking pen or a newly varnished wood chair, and do not pose a physical hazard or health risk to employees.

- Food or alcoholic beverages that are sold, used, or prepared in a retail establishment such as a grocery store, restaurant, or drinking place, and foods intended for personal consumption by employees while in the workplace.

- Any drug, defined in the Federal Food, Drug, and Cosmetic Act (21 U.S.C. 301 et seq.), when it is in solid, final form for direct administration to the patient (for example, tablets or pills); drugs that are packaged by the chemical manufacturer for sale to consumers in a retail establishment (for example over-the-counter drugs); and drugs intended for personal consumption by employees while in the workplace (for example, first-aid supplies). Aerosolized or cytotoxic drugs administered by a health care worker are not excluded.

- Cosmetics packaged for sale to consumers in a retail establishment, and cosmetics intended for personal consumption by employees while in the *workplace.*

- Ionizing and nonionizing radiation.

- Biological hazards.

• This rule does not require labeling of the following chemicals:

- Any pesticide, defined in the Federal Insecticide, Fungicide, and Rodenticide Act (7 U.S.C. 136 et seq.), when subject to the labeling requirements of that act and labeling regulations issued under that act by the Environmental Protection Agency.

- Any chemical substance or mixture, in the Toxic Substance Control Act (15 U.S.C. 2601 et seq.), when subject to the labeling requirements of that act, and labeling requirements issued under that act by the Environmental Protection Agency.

- Any food, food additive, color additive, drug, cosmetic, or medical/veterinary device or product, including materials intended for use as ingredients in such products (for example, flavors and fragrances), as such terms are defined in the Federal Food, Drug, and Cosmetic Act (21 U.S.C. 301 et seq.) or the Virus-Serum Toxin Act of 1913 (21 U.S.C. 151 et seq.) and regulations issued under those acts, when they are subject to the labeling requirements under those acts by either the Food and Drug Administration or the Department of Agriculture.

- Any distilled spirits (beverage alcohols), wine, or malt beverage intended for nonindustrial use, defined in the Federal Alcohol Administration Act (27 U.S.C. 201 et seq.) and regulations issued under that act, when subject to the labeling requirements of that act and labeling regulations issued under that act by the Bureau of Alcohol, Tobacco, and Firearms.

- Any consumer product or hazardous substance, as defined in the Consumer Product Safety Act (15 U.S.C. 2051 et seq.) and Federal Hazardous Substances Act (15 U.S.C. 1261 et seq.) respectively, when subject to a consumer product safety rule or labeling requirement of those acts, or regulations issued under those acts by the Consumer Product Safety Commission.

- Agricultural or vegetable seed treated with pesticides and labeled in accordance with the Federal Seed Act (7 U.S.C. 1551 et seq.), and the labeling requirements issued under that act by the Department of Agriculture.

[Statutory Authority: RCW 49.17.010, [49.17].040, and [49.17].050. WSR 01-17-033, § 296-307-55055, filed 8/8/01, effective 9/1/01.]

WAC 296-307-55060 Definitions.

Chemical

• An element or mixture of elements

OR

• A compound or mixture of compounds

OR

• A mixture of elements and compounds

Included are manufactured items (such as bricks, welding rods, and sheet metal) that are not exempt as an article.

Chemical manufacturer

An employer with a workplace where one or more chemicals are produced for use or distribution.

Chemical name

• The scientific designation of a chemical developed by the:

- International Union of Pure and Applied Chemistry (IUPAC)

OR

- Chemical abstracts service (CAS) rules of nomenclature

OR

- A name that clearly identifies the chemical for the purpose of conducting a hazard evaluation.

Combustible liquid

Liquids with a flashpoint of at least 100°F (37.8°C) and below 200°F (93.3°C). A mixture with at least 99% of its components having flashpoints of 200°F (93.3°C), or higher, is not considered a combustible liquid.

Commercial account

An arrangement where a retailer is selling hazardous chemicals to an employer

• Generally in large quantities over time

OR

• At costs below regular retail price.

Common name

Any designation or identification used to identify a chemical other than the chemical name, such as a:

• Code name or number

OR

• Trade or brand name

OR

• Generic name.

Compressed gas

A contained gas or mixture of gases with an absolute pressure greater than:

• 40 psi at 70°F (21.1°C)

OR

• 104 psi at 130°F (54.4°C) regardless of the pressure at 70°F (21.1°C)

OR

A liquid with a vapor pressure greater than 40 psi at 100°F (37.8°C) as determined by ASTM D323-72.

Container

A vessel, other than a pipe or piping system, that holds a hazardous chemical. Examples include:

• Bags
• Barrels
• Bottles
• Boxes
• Cans
• Cylinders
• Drums
• Rail cars
• Reaction vessels
• Storage tanks.

Designated representative

• An individual or organization with written authorization from an employee.

OR

• A recognized or certified collective bargaining agent (not necessarily authorized by an employee).

OR

• A legal representative of a deceased or legally incapacitated employee.

Director

The director means the director of the department of labor and industries or their designee.

Distributor

A business, other than a chemical manufacturer or importer, that supplies hazardous chemicals to other distributors or to employers. See WAC 296-307-560 through 296-307-56050 for requirements dealing with manufacturers, distributors and importers - hazard communication.

Employee

The term employee and other terms of like meaning, unless the context of the provision containing such term indicates otherwise, means an employee of an employer who is employed in the business of his or her employer whether by way of manual labor or otherwise and every person in this state who is engaged in the employment of or who is working under an independent contract the essence of which is personal labor for an employer under this standard whether by way of manual labor or otherwise.

Employer

An employer is any person, firm, corporation, partnership, business trust, legal representative, or other business entity which engages in any business, industry, profession, or activity in this state and employs one or more employees or who contracts with one or more persons, the essence of which is the personal labor of such person or persons and includes the state, counties, cities, and all municipal corporations, public corporations, political subdivisions of the state, and charitable organizations: Provided, That any persons, partnership, or business entity not having employees, and who is covered by the Industrial Insurance Act must be considered both an employer and an employee.

Explosive

A chemical that causes a sudden, almost instant release of pressure, gas, and heat when exposed to a sudden shock, pressure, or high temperature.

Exposure or exposed

An employee has been, or may have possibly been, subjected to a hazardous chemical, toxic substance or harmful physical agent while working. An employee could have been exposed to hazardous chemicals, toxic substances, or harmful physical agents in any of the following ways:

• Inhalation
• Ingestion
• Skin contact
• Absorption
• Related means.

The terms exposure and exposed only cover workplace exposure involving a toxic substance or harmful physical agent in the workplace different from typical nonoccupational situations in the way it is:

• Used
• Handled
• Stored
• Generated

OR

• Present.

Flammable

A chemical in one of the following categories:

• Aerosols that, when tested using a method described in 16 C.F.R. 1500.45, yield either a:

- Flame projection of more than eighteen inches at full valve opening

OR

- A flashback (a flame extending back to the valve) at any degree of valve opening

• Gases that, at the temperature and pressure of the surrounding area, form a:

- Flammable mixture with air at a concentration of thirteen percent, by volume, or less

OR

- Range of flammable mixtures with air wider than twelve percent, by volume, regardless of the lower limit

• Liquids with a flashpoint below 100°F (37.8°C). A mixture with at least ninety-nine percent of its components having flashpoints of 100°F (37.8°C), or higher, is not considered a flammable liquid

• Solids, other than blasting agents or explosives, as defined in WAC 296-52-417 or 29 C.F.R. 1910.109(a), that:

- Is likely to cause fire through friction, moisture, absorption, spontaneous chemical change or retained heat from manufacturing or processing

OR

- That can be readily ignited (and when ignited burns so vigorously and persistently that it creates a serious hazard)

OR

- When tested by the method described in 16 C.F.R. 1500.44, ignite and burn with a self-sustained flame at a rate greater than one-tenth of an inch per second along its major axis.

Flashpoint

• The minimum temperature at which a liquid gives off an ignitable concentration of vapor, when tested by any of the following measurement methods:

- Tagliabue closed tester. Use this for liquids with a viscosity less than 45 Saybolt Universal Seconds (SUS) at 100°F (37.8°C), that do not contain suspended solids and do not tend to form a surface film under test. See American National Standard Method of Test for Flashpoint by Tag Closed Tester, Z11.24.1979 (ASTM D 56-79)

- Pensky-Martens closed tester for liquids with a viscosity equal to, or greater than, 45 SUS at 100°F (37.8°C), or for liquids that contain suspended solids, or have a tendency to form a surface film under test. See American National Standard Method of Test for Flashpoint by Pensky-Martens Closed Tester, Z11.7.1979 (ASTM D 93-79)

- Setaflash closed tester: See American National Standard Method of Test for Flash Point by Setaflash Closed Tester (ASTM D 3278-78).

Organic peroxides, which undergo auto accelerating thermal decomposition, are excluded from any of the flashpoint measurement methods specified above.

Foreseeable emergency

Any potential event that could result in an uncontrolled release of a hazardous chemical into the workplace. Examples of foreseeable emergencies include equipment failure, rupture of containers, or failure of control equipment.

Hazardous chemical

A chemical, which is a physical or health hazard.

Hazard warning

Words, pictures, or symbols (alone or in combination), that appear on labels (or other forms of warning such as placards or tags) that communicate specific physical and health hazard(s), (including target organ effects), associated with chemical(s) in a container.

Health hazard

A chemical that may cause health effects in short or long-term exposed employees based on statistically significant evidence from a single study conducted by using established scientific principles. Health hazards include, but are not limited to, any of the following:

• Carcinogens
• Toxic or highly toxic substances
• Reproductive toxins
• Irritants
• Corrosives
• Sensitizers
• Hepatotoxins (liver toxins)
• Nephrotoxins (kidney toxins)
• Neurotoxins (nervous system toxins)
• Substances that act on the hematopoietic system (blood or blood forming system)
• Substances that can damage the lungs, skin, eyes, or mucous membranes.

Identity

A chemical or common name listed on the material safety data sheet (MSDS) and label.

Importer

The first business within the customs territory of the USA that:

• Receives hazardous chemicals produced in other countries

AND

• Supplies them to manufacturers, distributors or employers within the USA.

Material safety data sheet (MSDS)

Written, printed or electronic information (on paper, microfiche, or on-screen) that informs manufacturers, distributors or employers about the chemical, its hazards and protective measures as required by this rule.

Mixture

A combination of 2 or more chemicals that retain their chemical identity after being combined.

Organic peroxide

An organic compound containing the bivalent-0-0-structure. It may be considered a structural derivative of hydrogen peroxide if one or both of the hydrogen atoms has been replaced by an organic radical.

Oxidizer

A chemical, other than a blasting agent or explosive as defined in WAC 296-52-417 or C.F.R. 1910.109(a), that starts or promotes combustion in other materials, causing fire either of itself or through the release of oxygen or other gases.

Permissible exposure limits (PELs)

See WAC 296-307-628 for the definition of this term.

Physical hazard

A chemical that has scientifically valid evidence to show it is one of the following:

• A combustible liquid
• A compressed gas
• Explosive
• Flammable
• An organic peroxide
• An oxidizer
• Pyrophoric
• Unstable (reactive)
• Water reactive.

Produce

To do one or more of the following:

• Manufacture
• Process
• Formulate
• Blend
• Extract
• Generate
• Emit
• Repackage.

Purchaser

An employer who buys one or more hazardous chemicals to use in their workplace.

Pyrophoric

Chemicals that ignite spontaneously in the air at a temperature of 130°F (54.4°C) or below.

Responsible party

Someone who can provide more information about the hazardous chemical and appropriate emergency procedures.

Specific chemical identity

This term applies to chemical substances. It can mean the:

• Chemical name
• Chemical abstracts service (CAS) registry number
• Any other information that reveals the precise chemical designation of the substance.

Trade secret

Any confidential:

• Formula
• Pattern
• Process
• Device
• Information
• Collection of information.

The trade secret is used in an employer's business and gives an opportunity to gain an advantage over competitors who do not know or use it.

See WAC 296-62-053 for requirements dealing with trade secrets.

Unstable (reactive)

A chemical in its pure state, or as produced or transported, that will vigorously polymerize, decompose, condense, or become self-reactive under conditions of shocks, pressure or temperature.

Use

To do one or more of the following:

• Package
• Handle
• React
• Emit
• Extract
• Generate as a by-product
• Transfer.

Water-reactive

A chemical that reacts with water to release a gas that is either flammable or presents a health hazard.

Work area

A room or defined space in a workplace where hazardous chemicals are produced or used, and where employees are present.

Workplace

The term workplace means an establishment, job site, or project, at one geographical location containing one or more work areas.

[Statutory Authority: RCW 49.17.010, 49.17.040, 49.17.050, 49.17.060. WSR 05-01-166, § 296-307-55060, filed 12/21/04, effective 4/2/05. Statutory Authority: RCW 49.17.010, [49.17].040, and [49.17].050. WSR 01-17-033, § 296-307-55060, filed 8/8/01, effective 9/1/01.]

Part Y-2

Material Safety Data Sheets and Label Preparation

WAC 296-307-560 Scope. This chapter sets minimum requirements for content and distribution of material safety data sheets (MSDSs) and labels for hazardous chemicals.

• This chapter applies when you do **one or more** of the following:

- Import, produce, or repackage chemicals, including manufactured items (such as bricks, welding rods, and sheet metal) that are not exempt as articles

- Sell or distribute hazardous chemicals to manufacturers, distributors or employers

- Choose not to rely on material safety data sheets (MSDSs) provided by the importer, manufacturer or distributor.

Note:
• You are not required to evaluate chemicals or create MSDSs for chemicals you did not produce or import. If you decide to evaluate chemicals or create MSDSs, then the requirements of this chapter will apply to you.
• Use Table 2 to determine which sections in this chapter apply to your workplace.
• WAC 296-307-560, Part Y-2, Material Safety Data Sheets and Label Preparation, has been changed and replaced by WAC 296-901-140, Hazard communication. However, there are several implementations dates which are listed below and during this transition employer can comply with this chapter or WAC 296-901-140, Hazard communication until completion of the each effective date.

Effective Completion Date	Requirement(s)	Who
June 1, 2014	Train employees on the new label elements and safety data sheet (SDS) format.	Employers
June 1, 2015 December 1, 2015	Compliance with all modified provisions of this final rule, except: The distributor shall not ship containers labeled by the chemical manufacturer or importer unless it is a GHS label	Chemical manufacturers, importers, distributors and employers
June 1, 2016	Update alternative workplace labeling and hazard communication program as necessary, and provide additional employee training for newly identified physical or health hazards.	Employers
Transition period to the effective completion dates noted above.	May comply with the applicable requirements in the following rules: Chapter 296-307 WAC, Part Y-1, Employer Chemical Hazard Communication (Agriculture). Chapter 296-307 WAC, Part Y-2, Material Safety Data Sheets and Label Preparation. WAC 296-901-140, Hazard communication.	Chemical manufacturers, importers, distributors, and employers

Exemptions:
• All of the following are **always** exempt from this chapter:
- Ionizing and nonionizing radiation
- Biological hazards
- Tobacco and tobacco products
• The chemicals and items listed in Table 1 are exempt from this chapter **under the conditions specified.**

Table 1
Conditional Exemptions From This Chapter

This chapter does NOT apply to	When
• Alcoholic beverages **OR** • Foods	• Sold, used, or prepared in a retail establishment (such as a grocery store, restaurant, bar, or tavern)
• An article (manufactured item)	• It is not a fluid or particle **AND** • It is formed to a specific shape or design during manufacture for a particular end use function[1] **AND**

This chapter does NOT apply to	When
	• It releases only trace amounts of a hazardous chemical during normal use **AND** does not pose a physical or health risk to employees
• Consumer products - Produced or distributed for sale meeting the definition of "consumer products" in the Consumer Product Safety Act (see U.S. Code, Title 15, Chapter 47, section 2052[2]) **OR** • Hazardous household products - Meeting the definition of "hazardous substances" in the Federal Hazardous Substance Act (see U.S. Code, Title 15, Chapter 30, section 1261[2])	• Both criteria apply: - They are used in the workplace for the same purpose as intended by the manufacturer or importer - The duration and frequency of an employee's exposure is no more than the range of exposures that consumers might reasonably experience
• Cosmetics	• Packaged and sold in retail establishments
• Drugs - Meeting the definition for "drugs" in the Federal Food, Drug, and Cosmetic Act (see U.S. Code, Title 21, Chapter 9, Subchapter II, section 321[2])	• In solid, final form (for example, tablets, or pills) for direct administration to the patient **OR** • Packaged and sold in retail establishments (for example, over-the-counter drugs) **OR** • Intended for employee consumption while in the workplace (for example, first-aid supplies)
• Hazardous solid wastes - Meeting the definition of "hazardous wastes" in the Solid Waste Disposal Act, as amended by the Resource Conservation and Recovery Act of 1976 (see U.S. Code, Title 42, Chapter 82, Subchapter I, section 6903[2])	• Subject to the United States Environmental Protection Agency (EPA) regulations[3]
• Hazardous substances - Released into the environment, meeting the definition of "hazardous substances" in the Comprehensive Environmental Response, Compensation and Liability Act (CERCLA) (see U.S. Code, Title 42, Chapter 103, Subchapter I, section 9601[2])	• They are the focus of remedial or removal action being conducted under CERCLA in accordance with EPA regulations (Title 40 of the Code of Federal Regulations (C.F.R.)[3])
• Hazardous wastes - Meeting the definition of "dangerous wastes" in the Hazardous Waste Management Act (see chapter 70.105 RCW[4])	• Subject to department of ecology regulations, chapter 173-303 WAC[5], that address the accumulation, handling and management of hazardous waste, and describe all of the following: - Safety - Labeling - Personnel training - And other related requirements
• Solid wood **OR** • Wood products (for example, lumber, and paper)	• All of the following apply: - The material is not treated with hazardous chemicals - The only hazard is potential flammability or combustibility - The product is not expected to be processed (for example, by sanding or sawing)

1 End use is dependent in whole, or in part, upon maintaining the item's original shape or design. If the item will be significantly altered from its original form, it can no longer be considered a manufactured item.

2 This federal act is included in the United States Code. See http://www.access.gpo.gov/uscode/uscmain.html.

3 EPA regulations are included in the Code of Federal Regulations (C.F.R.). See http://www.epa.gov.

4 This state act is included in the Revised Code of Washington (RCW). The RCW compiles all permanent laws of the state. See http://www.leg.wa.gov/wsladm/default.htm.

5 See http://www.ecy.wa.gov.

Use Table 2 to find out which sections of this part apply to you. For example, if you import **AND** sell hazardous chemicals **ALL** sections apply. WAC 296-307-56050 applies to all employers covered by the scope of this part.

Table 2
Section Application

	Then the sections marked with an "X" apply			
If you	**56010 - 56015**	**56025**	**56030 - 56035**	**56045**
• Import or produce chemicals	X	X		
• Sell or distribute hazardous chemicals to - Manufacturers **OR** - Distributors **OR** - Employers (includes retail or wholesale transactions)			X	X
• Choose to **NOT** rely on MSDSs provided by the importer, manufacturer or distributor	X	X		

[Statutory Authority: RCW 49.17.010, 49.17.040, 49.17.050, 49.17.060, and chapter 49.17 RCW. WSR 15-13-097, § 296-307-560, filed 6/16/15, effective 8/3/15. Statutory Authority: RCW 49.17.010, 49.17.040, 49.17.050, 49.17.060. WSR 05-01-166, § 296-307-560, filed 12/21/04, effective 4/2/05; WSR 03-10-068, § 296-307-560, filed 5/6/03, effective 8/1/03.]

WAC 296-307-56005 Hazard evaluation.

Your responsibility:

To make sure the hazardous chemicals are identified.

You must:

Conduct complete hazard evaluations

WAC 296-307-56010

Provide access to hazard evaluation procedures

WAC 296-307-56015.

[Statutory Authority: RCW 49.17.010, 49.17.040, 49.17.050, and 49.17.060. WSR 03-10-068, § 296-307-56005, filed 5/6/03, effective 8/1/03.]

WAC 296-307-56010 Conduct complete hazard evaluations.

IMPORTANT:

• Hazard evaluation is a process where hazards of chemicals are identified by reviewing available research or testing information. You are not required to perform your own laboratory research or testing to meet the requirements of this section

- Information from hazard evaluations is used to complete material safety data sheets (MSDSs) and labels

- MSDSs from your suppliers may be used to complete the hazard evaluation for chemicals you produce

- MSDSs and labels are **NOT** required for chemicals that are determined to be nonhazardous

• Importers and manufacturers are required to develop MSDSs and labels. If you decide to develop your own MSDSs and labels, then this chapter also applies to you.

You must:

(1) Describe in writing your procedures for conducting hazard evaluations.

(2) Conduct a complete hazard evaluation for **ALL** chemicals you produce or import to determine if they are hazardous chemicals.

• Identify and consider available scientific evidence of health and physical hazards

• Evidence that meets the criteria in Table 3 must be used to establish a hazard

• Chemicals identified in a Table 4 source must be regarded as hazardous

• The scope of health hazards considered must include the categories in Tables 5 and 6

• If the chemical is a mixture, follow the additional criteria in Table 7

• If you find evidence that meets the criteria in Table 3, use it in your hazard evaluation.

Table 3
Criteria for Hazard Evidence

Hazard	Criteria
• Health hazard	• Where available, use human case reports of health effects **AND** • One or more studies that - Are based on human populations, if available, and animal populations[1,2] **AND** - Report statistically significant conclusions of a hazardous effect or health hazard (as defined in this rule) **AND** - Have been conducted following established scientific principles
• Physical hazard	• Valid evidence that shows a chemical is any one of the following[3]: - A combustible liquid - A compressed gas - Explosive - Flammable - An organic peroxide - An oxidizer - Pyrophoric - Unstable (reactive) - Water-reactive

[1] If human data is not available, use results of tests done on animals and other available studies to predict health effects on employees (for example, effects resulting from short and long-term exposures to chemicals).

[2] In vitro studies alone do not generally form the basis of a finding of hazard.

[3] These terms are defined in WAC 296-307-56050.

Chemicals identified in the sources listed in Table 4 must be assumed to be hazardous (including carcinogens and potential carcinogens).

Table 4 Information Sources Identifying Hazardous Chemicals
• Sources that address a broad range of hazard categories: - Chapter 296-62 WAC, General Occupational Health Standards, WISHA - 29 C.F.R. Part 1910, Subpart Z, Toxic and Hazardous Substances, Occupational Safety and Health Administration (OSHA) - *Threshold Limit Values for Chemical Substances and Physical Agents in the Work Environment*, American Conference of Governmental Industrial Hygienists (ACGIH) (latest edition). • Sources that identify carcinogens or potential carcinogens: - Chapter 296-62 WAC, General Occupational Health Standards, WISHA - 29 C.F.R. Part 1910, Subpart Z, Toxic and Hazardous Substances, Occupational Safety and Health Administration (OSHA) - National Toxicology Program (NTP), Annual Report on Carcinogens (latest edition) - International Agency for Research on Cancer (IARC) Monographs (latest editions). **Note:** The *Registry of Toxic Effects of Chemical Substances* is published by the National Institute for Occupational Safety and Health (NIOSH) and identifies chemicals found to be potential carcinogens by the NTP and IARC.

Chemicals meeting Table 5 definitions, along with the criteria for established evidence in Table 3, must be regarded as hazardous.

Table 5 is NOT intended to present all hazard categories or test methods. Available scientific data involving other test methods and animal species must also be evaluated to determine a chemical's hazards.

Table 5 Standard Health Hazard Categories	
A chemical is considered to be	**If**
• A carcinogen	• The International Agency for Research on Cancer (IARC) considers it to be a carcinogen or potential carcinogen **OR** • The National Toxicity Program (NTP) (latest edition) lists it as a carcinogen or potential carcinogen **OR** • It is regulated by WISHA or OSHA as a carcinogen
• Corrosive	• It causes visible destruction of, or irreversible alterations in, living tissue (not inanimate surfaces) by chemical action at the site of contact Example: - A chemical is corrosive if tested on the intact skin of albino rabbits by a method described by the U.S. Department of Transportation (in Appendix A to 49 C.F.R. Part 173) and it destroys or changes (irreversibly) the structure of the tissue at the contact site after a four-hour exposure period
• Toxic	• It has a median lethal dose (LD50) greater than 50 milligrams per kilogram, but no more than 500 milligrams per kilogram of body weight, when administered orally to albino rats weighing between 200 - 300 grams each **OR** • It has a median lethal dose (LD50) greater than 200 milligrams per kilogram, but not more than 1,000 milligrams per kilogram, of body weight when administered by continuous contact for twenty-four hours (or less if death occurs within twenty-four hours) with the bare skin of albino rabbits weighing between 2 - 3 kilograms each **OR** • It has a median lethal concentration (LC50), in air: - Greater than 200 parts per million, but not more than 2,000 parts per million (by volume of gas or vapor) **OR**

Table 5 Standard Health Hazard Categories	
A chemical is considered to be	**If**
	- Greater than 2 milligrams per liter, but not more than 20 milligrams per liter, of mist, fume, or dust, when administered by continuous inhalation for one hour (or less if death occurs within one hour) to albino rats, weighing between 200 - 300 grams each
• Highly toxic	• It has a median lethal dose (LD50) of 50 milligrams, or less, per kilogram of body weight when administered orally to albino rats weighing between 200 - 300 grams each **OR** • It has a median lethal dose (LD50) of 200 milligrams, or less, per kilogram of body weight when administered by continuous contact for twenty-four hours (or less if death occurs within twenty-four hours) with the bare skin of albino rabbits weighing between 2 - 3 kilograms each **OR** • It has a median lethal concentration of (LC50), in air, of: - 200 parts per million (by volume), or less, of gas or vapor **OR** - 2 milligrams per liter, or less, of mist, fume, or dust, when administered by continuous inhalation for one hour (or less if death occurs within one hour) to albino rats weighing between 200 - 300 grams each
• An irritant	• It is **NOT** corrosive, but causes a reversible inflammatory effect on living tissue by chemical action at the contact site Examples: - The chemical is a skin irritant when tested on the intact skin of albino rabbits (by the methods of 16 C.F.R. 1500.41) for four hours exposure (or by other appropriate techniques), and the exposure results in an empirical score of five or more

Table 5 Standard Health Hazard Categories	
A chemical is considered to be	**If**
	- A chemical is an eye irritant if so determined under the procedure listed in 16 C.F.R. 1500.42 or other appropriate techniques
• A sensitizer	• It causes a substantial proportion of exposed people or animals to develop an allergic reaction in normal tissue after repeated exposure

Categories provided in Table 6 illustrate the broad range of target organ effects that must be considered when conducting hazard evaluations. Chemicals meeting Table 6 definitions, along with the criteria for established evidence in Table 3, must be regarded as hazardous.

Examples provided in Table 6 are **NOT** intended to be a complete list.

Table 6 Examples of Target Organ Effect Categories Category			
Category	**Definition**	**Examples of Signs and Symptoms**	**Examples of Chemicals**
Hepatotoxins	Cause liver damage	• Jaundice • Liver enlargement	• Carbon tetrachloride • Nitrosamines
Nephrotoxins	Cause kidney damage	• Edema • Proteinuria	• Halogenated hydrocarbons • Cadmium
Neurotoxins	Cause primary toxic effects on the nervous system	• Narcosis • Behavioral changes • Decrease in motor functions	• Mercury • Carbon disulfide • Lead
Chemicals that act on the • Blood **OR** • Hematopoietic (blood forming) system	• Decrease hemoglobin function **OR** • Deprive the body tissues of oxygen	• Cyanosis • Loss of consciousness	• Carbon monoxide • Cyanides • Benzene
Chemicals that damage the lungs	• Irritate lungs **OR** • Damage pulmonary tissue	• Cough • Tightness in chest • Shortness of breath	• Silica • Asbestos
Reproductive toxins	Affect reproductive capabilities, including: • Chromosomal damage (mutation) • Effects on fetuses (teratogenesis)	• Birth defects • Sterility	• Lead • 1,2-Dibromo-3-chloropropane (DBCP) • Nitrous oxide
Cutaneous (skin) hazards	Affect the dermal layer of the body	• Defatting of the skin • Rashes • Irritation	• Ketones • Chlorinated compounds
Eye hazards	Affect the eye or ability to see	• Conjunctivitis • Corneal damage	• Organic solvents • Acids

Table 7 Criteria for Evaluating Chemical Mixtures	
If a mixture	**Then**
• Has been thoroughly tested as a whole for a physical or health hazard	• You must use those results
• Has **NOT** been tested as a whole for a health hazard	• You must: - Evaluate **EACH** ingredient in the mixture to determine the hazards - Consider the mixture to have the same hazard as each ingredient determined to be hazardous
• Has **NOT** been tested as a whole for physical hazards	• You must: • Use any scientifically valid data available to evaluate the potential physical hazards of the mixture

[Statutory Authority: RCW 49.17.010, 49.17.040, 49.17.050, and 49.17.060. WSR 03-10-068, § 296-307-56010, filed 5/6/03, effective 8/1/03.]

WAC 296-307-56015 Provide access to hazard evaluation procedures.

You must:

• Provide access to your written hazard evaluation procedures when requested by any of the following:

- Employees
- Designated representatives of employees
- Representatives of the department of labor and industries
- Representatives of the National Institute for Occupational Safety and Health (NIOSH).

[Statutory Authority: RCW 49.17.010, 49.17.040, 49.17.050, and 49.17.060. WSR 03-10-068, § 296-307-56015, filed 5/6/03, effective 8/1/03.]

WAC 296-307-56020 Material safety data sheets.

Your responsibility:

To provide complete and accurate material safety data sheets (MSDSs).

You must:

Develop or obtain MSDSs

WAC 296-307-56025

Provide MSDSs

WAC 296-307-56030

Follow-up if an MSDS is not provided

WAC 296-307-56035.

[Statutory Authority: RCW 49.17.010, 49.17.040, 49.17.050, and 49.17.060. WSR 03-10-068, § 296-307-56020, filed 5/6/03, effective 8/1/03.]

WAC 296-307-56025 Develop or obtain material safety data sheets (MSDSs).

You must:

• Develop or obtain a complete and accurate material safety data sheet (MSDS) for each hazardous chemical or mixture according to **ALL** of the following:

- **ALL** information in Table 8 must be completed. If there is no relevant information for a required item, this must be noted. Blank spaces are not permitted.

Note: • No specific format is required for MSDSs; however, an example format (OSHA form 174) can be found online at: http://www.osha.gov

• One MSDS can be developed for a group of complex mixtures (for example, jet fuels or crude oil) **IF** the health and physical hazards of the mixtures are similar (the amounts of chemicals in the mixture may vary).

- Content of MSDSs must accurately represent the available scientific evidence.

Note: You may report results of scientifically valid studies that tend to refute findings of hazards.

- MSDSs must be in English.

Note: You may develop copies of MSDSs in other languages.

You must:

• Revise an MSDS when you become aware of new and significant information regarding the hazards of a chemical, or how to protect against the hazards

- Within three months after you first become aware of the information

OR

- Before the chemical is reintroduced into the workplace if the chemical is no longer being used, produced or imported.

Table 8 Information Required on MSDSs
• The chemical's identity as it appears on the label
• The date the MSDS was prepared or updated
• A contact for additional information about the hazardous chemical and appropriate emergency procedures Include all of the following: - Name - Address - Telephone number of the responsible party preparing or distributing the MSDS
• The chemical's hazardous ingredients[1] as determined by your hazard evaluation - For a **single substance chemical,** include the chemical and common name(s) of the substance - For **mixtures** tested as a whole ■ Include the common name(s) of the mixture **AND** ■ List the chemical and common name(s) of ingredients that contribute to the known hazards - For **mixtures NOT** tested as a whole, list the chemical and common name(s) of hazardous ingredients ■ That make up 1% or more of the mixture, by weight or volume, including carcinogens (if 0.1% concentration or more, by weight or volume)

Table 8 Information Required on MSDSs
- If ingredients are less than the above concentrations but may present a health risk to employees (for example, allergic reaction or exposure could exceed the permissible exposure limits, or PEL) they must be listed here
• Exposure limits for airborne concentrations. Include **ALL** of the following, when they exist: - WISHA or OSHA PELs[2] ■ The 8-hour time weighted average (TWA) ■ The short-term exposure limit (STEL), if available ■ Ceiling values, if available - Threshold limit values (TLVs) including 8-hour TWAs, STELs, and ceiling values - Other exposure limits used or recommended by the employer preparing the MSDS
• Physical and chemical characteristics - For example, boiling point, vapor pressure, and odor
• Fire, explosion data, and related information - For example, flashpoint, flammable and explosion limits, extinguishing media, and unusual fire or explosion hazards
• Physical hazards of the chemical including reactivity information - For example, incompatibilities, decomposition products, by-products, and conditions to avoid
• Health hazard information including **ALL** of the following: - Primary routes of exposure • For example, inhalation, ingestion, and skin absorption or other contact[3] - Health effects (or hazards) associated with: ■ Short-term exposure[4] **AND** ■ Long-term exposure[4] - Whether the chemical is listed or described as a carcinogen or potential carcinogen in the latest editions of each of the following: ■ The National Toxicology Program (NTP) Annual Report on Carcinogens **OR** ■ The International Agency for Research on Cancer (IARC) Monographs as a potential carcinogen **OR** ■ WISHA or OSHA rules - Signs and symptoms of exposure[5] - Medical conditions generally recognized as being aggravated by exposure

Table 8 Information Required on MSDSs
• Emergency and first-aid procedures
• Generally applicable precautions for safe handling and use known to the employer preparing the MSDS - For example, appropriate procedures for clean-up of spills and leaks, waste disposal method, precautions during handling and storing
• Generally applicable and appropriate control measures known to the employer preparing the MSDS, including **ALL** of the following: - Engineering controls (for example, general or local exhaust ventilation) - Work practices - Personal protective equipment (PPE) - Personal hygiene practices - Protective measures during repair and maintenance of contaminated equipment

1 The identities of some chemicals may be protected as trade secret information (see chapter 296-62 WAC, Part B-1, Trade secrets).

2 WISHA PEL categories are defined, and values are provided, in chapter 296-307 WAC, Part Y-6.

3 A "skin notation" listed with either an ACGIH TLV or WISHA/OSHA PEL indicates that skin absorption is a primary route of exposure.

4 Examples of:

• Short-term health effects (or hazards) include eye irritation, skin damage caused by contact with corrosives, narcosis, sensitization, and lethal dose.

• Long-term health effects (or hazards) include cancer, liver degeneration, and silicosis.

5 Signs and symptoms of exposure to hazardous substances include those that:

• Can be measured such as decreased pulmonary function

AND

• Are subjective such as feeling short of breath.

[Statutory Authority: RCW 49.17.010, 49.17.040, 49.17.050, 49.17.060. WSR 05-01-166, § 296-307-56025, filed 12/21/04, effective 4/2/05; WSR 03-10-068, § 296-307-56025, filed 5/6/03, effective 8/1/03.]

WAC 296-307-56030 Provide MSDSs for products shipped, transferred or sold over-the-counter.

You must:

• Provide the correct MSDS to manufacturers, distributors and employers:

- With the initial shipment or transfer of the product

AND

- With the first shipment or transfer after an MSDS is updated

AND

- Whenever one is requested.

Note:

• MSDSs may be provided separately from containers as long as they are provided before or at the same time as the containers. For example, you may fax, or e-mail the MSDS

• You are **NOT** required to provide MSDSs to retailers who inform you they

- Do not sell the product to commercial accounts

AND

- Do not open the sealed product containers for use in their workplace.

You must:

• Follow the requirements in Table 9 for chemicals sold over-the-counter.

Table 9 Requirements for Chemicals Sold Over-the-Counter (NOT Shipped)	
If you are a	**Then**
• Retail distributor WITH commercial accounts	• Provide an MSDS to employers with commercial accounts when requested AND • Post a sign, or otherwise inform employers, that MSDSs are available
• Retail distributor WITHOUT commercial accounts	• Provide the employer, when requested, with ALL of the following: - Name - Address - Telephone number of the chemical manufacturer, importer, or distributor who can provide an MSDS
• Wholesale distributor selling products over-the-counter to employers	• Provide an MSDS to employers with commercial accounts when requested AND • Post a sign, or otherwise inform employers, that MSDSs are available

[Statutory Authority: RCW 49.17.010, 49.17.040, 49.17.050, and 49.17.060. WSR 03-10-068, § 296-307-56030, filed 5/6/03, effective 8/1/03.]

WAC 296-307-56035 Follow-up if an MSDS is not provided.

You must:

• Obtain an MSDS from the chemical manufacturer, distributor or importer as soon as possible, if an MSDS is not provided for a shipment labeled as a hazardous chemical.

[Statutory Authority: RCW 49.17.010, 49.17.040, 49.17.050, and 49.17.060. WSR 03-10-068, § 296-307-56035, filed 5/6/03, effective 8/1/03.]

WAC 296-307-56040 Labeling.

Your responsibility:

To provide employers with containers of hazardous chemicals that are properly labeled.

[Statutory Authority: RCW 49.17.010, 49.17.040, 49.17.050, and 49.17.060. WSR 03-10-068, § 296-307-56040, filed 5/6/03, effective 8/1/03.]

WAC 296-307-56045 Label containers of hazardous chemicals.

Exemption: Containers are exempt from this section if ALL hazardous contents are listed in Table 11.

You must:

• Make sure every container of hazardous chemicals leaving the workplace is properly labeled. This includes ALL of the following:

- The identity of the hazardous chemical (the chemical or common name) that matches the identity used on the MSDS

- An appropriate hazard warning

- The name and address of the chemical manufacturer, importer, or other responsible party

- Make sure labeling does not conflict with the requirements of:

• The Hazardous Materials Transportation Act (49 U.S.C. 1801 et seq.)

AND

• Regulations issued under the act by the U.S. Department of Transportation (Title 49 of the Code of Federal Regulations, Parts 171 through 180). See http://www.dot.gov

- Revise labels within three months of becoming aware of new and significant information about chemical hazards

- Provide revised labels on containers beginning with the first shipment after a revision, to manufacturers, distributors or employers

- Revise the label when a chemical is not currently used, produced or imported, before:

• You resume shipping (or transferring) the chemical

OR

• The chemical is reintroduced in the workplace

- Label information

• Clearly written in English

AND

• Prominently displayed on the container.

Reference: Additional labeling requirements for specific hazardous chemicals (for example, asbestos and cadmium) are found in chapter 296-62 WAC, General occupational health standards (see parts F, G, and I-1 of that chapter).

Note: When the conditions specified in Table 10 are met for the solid material products listed, you are not required to provide labels for every shipment.

Table 10 Labeling for Solid Materials	
You need only send labels with the first shipment, IF the product is	**And**
Whole grain	• It is shipped to the same customer AND • No hazardous chemicals are part of or known to be present with the product which could expose employees during handling - For example, cutting fluids on solid metal, and pesticides with grain
Solid untreated wood	
Solid metal For example: Steel beams, metal castings	
Plastic items	

Exemptions: The chemicals (and items) listed in Table 11 are EXEMPT from THIS SECTION under the conditions specified. Requirements in other sections still apply.

Table 11
Conditional Label Exemptions

This section does not apply to	When the product is
• Pesticides - Meeting the definition of "pesticides" in the Federal Insecticide, Fungicide, and Rodenticide Act (FIFRA) (see Title 7, U.S.C. Chapter 6, Subchapter II, section 136[1])	• Subject to - Labeling requirements of FIFRA[1] **AND** - Labeling regulations issued under FIFRA by the United States Environmental Protection Agency (EPA) (see Title 40 of the Code of Federal Regulations[2])
• A chemical substance or mixture - Meeting the definition of "chemical substance" or "mixture" in the Toxic Substance Control Act (TSCA) (see Title 15 U.S.C. Chapter 53, Subchapter II, Section 2602[1])	• Subject to - Labeling requirements of TSCA[1] **AND** - Labeling requirements issued under TSCA by the EPA (see Title 40 of the Code of Federal Regulations[2])
• Each of the following - Food - Food additives - Color additives - Drugs - Cosmetics - Medical devices or products - Veterinary devices or products - Materials intended for use in these products (for example: Flavors, and fragrances) • As defined in - The Federal Food, Drug, and Cosmetic Act (see Title 21 U.S.C. Chapter 9, Subchapter II, Section 321[1]) **OR** - The Virus-Serum Toxin Act of 1913 (see Title 21 U.S.C. Chapter 5, Section 151 et seq.[1]) **OR** - Regulations issued under these acts (see Title 21 Part 101 in the Code of Federal Regulations, and Title 9, in the Code of Federal Regulations[3])	• Subject to: - Labeling requirements in Federal Food, Drug, and Cosmetic Act, Virus-Serum Toxin Act of 1913, and issued regulations enforced by the United States Food and Drug Administration (see Title 21 Parts 101-180 in the Code of Federal Regulations[3]) **OR** - Department of Agriculture (see Title 9, in the Code of Federal Regulations[3])
• Each of the following: - Distilled spirits (beverage alcohols) **AND** - Wine **AND** - Malt beverage • As defined in - The Federal Alcohol Administration Act (see Title 27 U.S.C. Section 201[1]) **AND** - Regulations issued under this act (see Title 27 in the Code of Federal Regulations[3])	• Subject to: - Labeling requirements of Federal Alcohol Administration Act[1] **AND** - Labeling regulations issued under Federal Alcohol Administration Act by the Bureau of Alcohol, Tobacco, and Firearms (see Title 27 in the Code of Federal Regulations[3])
• Consumer products **AND** • Hazardous substances	• Subject to: - A consumer product safety or labeling requirement of the Consumer Product Safety Act or Federal Hazardous Substances Act[1] **OR**

Table 11 Conditional Label Exemptions	
This section does not apply to	**When the product is**
- As defined in the Consumer Product Safety Act (see 15 U.S.C. 2051 et seq.[1]) **AND** - The Federal Hazardous Substances Act (see 15 U.S.C. 1261 et seq.[1])	- Regulations issued under these acts by the Consumer Product Safety Commission (see Title 16 in the Code of Federal Regulations[3])
• Agricultural seed **AND** • Vegetable seed treated with pesticides	• Labeled as required by - The Federal Seed Act (see Title 7 U.S.C. Chapter 37 Section 1551 et seq.[1]) **AND** - Labeling requirements issued under Federal Seed Act by the United States Department of Agriculture[1]

1 This federal act is included in the United States Code. See http://www.access.gpo.gov/uscode/uscmain.html.

2 See http://www.epa.gov.

3 See http://www.access.gpo.gov/nara/cfr/index.html.

[Statutory Authority: RCW 49.17.010, 49.17.040, 49.17.050, 49.17.060. WSR 06-08-087, § 296-307-56045, filed 4/4/06, effective 9/1/06; WSR 03-10-068, § 296-307-56045, filed 5/6/03, effective 8/1/03.]

WAC 296-307-56050 Definitions. The following definitions apply to this chapter:

Article (manufactured item)

A manufactured item that

• Is not a fluid or particle

AND

• Is formed to a specific shape or design during manufacture for a particular end use function

AND

• Releases only trace amounts of a hazardous chemical during normal use and does not pose a physical or health risk to employees.

Chemical

• An element or mixture of elements

OR

• A compound or mixture of compounds

OR

• A mixture of elements and compounds

Included are manufactured items (such as bricks, welding rods and sheet metal) that are not exempt as an article.

Chemical name

• The scientific designation of a chemical developed by the

- International union of pure and applied chemistry (IUPAC)

OR

- Chemical abstracts service (CAS) rules of nomenclature

OR

• A name that clearly identifies the chemical for the purpose of conducting a hazard evaluation.

Combustible liquid

Liquids with a flashpoint of at least 100°F (37.8°C) and below 200°F (93.3°C). A mixture with at least 99% of its components having flashpoints of 200°F (93.3°C), or higher, is not considered a combustible liquid.

Commercial account

An arrangement where a retailer is selling hazardous chemicals to an employer

• Generally in large quantities over time

OR

• At costs below regular retail price.

Common name

Any designation or identification used to identify a chemical other than the chemical name, such as a

• Code name or number

OR

• Trade or brand name

OR

• Generic name.

Compressed gas

• A contained gas or mixture of gases with an absolute pressure greater than:

- 40 psi at 70°F (21.1°C)

OR

- 104 psi at 130°F (54.4°C) regardless of the pressure at 70°F (21.1°C)

OR

• A liquid with a vapor pressure greater than 40 psi at 100°F (37.8°C), as determined by ASTM D323-72.

Container

A vessel, other than a pipe or piping system, that holds a hazardous chemical. Examples include:

• Bags
• Barrels
• Bottles
• Boxes
• Cans
• Cylinders
• Drums
• Reaction vessels
• Storage tanks
• Rail cars.

Designated representative

• An individual or organization with written authorization from an employee

OR

• A recognized or certified collective bargaining agent (not necessarily authorized by an employee)

OR

• A legal representative of a deceased or legally incapacitated employee.

Distributor

A business that supplies hazardous chemicals to other employers. Included are employers who conduct retail and wholesale transactions.

Explosive

A chemical that causes a sudden, almost instant release of pressure, gas, and heat when exposed to a sudden shock, pressure, or high temperature.

Flammable

A chemical in one of the following categories:

• Aerosols that, when tested using a method described in 16 C.F.R. 1500.45, yield either a:

- Flame projection of more than eighteen inches at full valve opening

OR

- A flashback (a flame extending back to the valve) at any degree of valve opening

• Gases that, at the temperature and pressure of the surrounding area, form a:

- Flammable mixture with air at a concentration of thirteen percent, by volume, or less

OR

- Range of flammable mixtures with air wider than twelve percent, by volume, regardless of the lower limit

• Liquids with a flashpoint below 100°F (37.8°C). A mixture with at least ninety-nine percent of its components having flashpoints of 100°F (37.8°C), or higher, is not considered a flammable liquid

• Solids, other than blasting agents or explosives, as defined in WAC 296-52-417 or 29 C.F.R. 1910.109(a), that:

- Is likely to cause fire through friction, moisture, absorption, spontaneous chemical change or retained heat from manufacturing or processing

OR

- That can be readily ignited (and when ignited burns so vigorously and persistently that it creates a serious hazard)

OR

- When tested by the method described in 16 C.F.R. 1500.44, ignite and burn with a self-sustained flame at a rate greater than 1/10th of an inch per second along its major axis.

Flashpoint

The minimum temperature at which a liquid gives off an ignitable concentration of vapor, when tested by any of the following measurement methods:

• Tagliabue closed tester. Use this for liquids with a viscosity less than 45 Saybolt Universal Seconds (SUS) at 100°F (37.8°C), that do not contain suspended solids and do not tend to form a surface film under test. See American National Standard Method of Test for Flashpoint by Tag Closed Tester, Z11.24-1979 (ASTM D 56-79)

• Pensky-Martens closed tester. Use this for liquids with a viscosity equal to, or greater than, 45 SUS at 100°F (37.8°C) or for liquids that contain suspended solids or have a tendency to form a surface film under test. See American National Standard Method of Test for Flashpoint by Pensky-Martens Closed Tester, Z11.7-1979 (ASTM D 93-79)

• Setaflash closed tester. See American National Standard Method of Test for Flashpoint by Setaflash Closed Tester (ASTM D 3278-78)

Organic peroxides, which undergo auto accelerating thermal decomposition, are excluded from any of the flashpoint measurement methods specified above.

Hazardous chemical

A chemical, which is a physical or health hazard.

Hazard warning

Words, pictures or symbols (alone or in combination) that appear on labels (or other forms of warning such as placards or tags) that communicate specific physical and health hazards (including target organ effects) associated with chemicals in a container.

Health hazard

A chemical that may cause health effects in short or long-term exposed employees based on statistically significant evidence from a single study conducted by using established scientific principles.

Health hazards include, but are not limited to, any of the following:

• Carcinogens
• Toxic or highly toxic substances
• Reproductive toxins
• Irritants
• Corrosives
• Sensitizers
• Hepatotoxins (liver toxins)
• Nephrotoxins (kidney toxins)
• Neurotoxins (nervous system toxins)
• Substances that act on the hematopoietic system (blood or blood forming system)
• Substances that can damage the lungs, skin, eyes, or mucous membranes.

Identity

A chemical or common name listed on the material safety data sheet (MSDS) and label.

Importer

The first business, within the Customs Territory of the United States, that receives hazardous chemicals produced in other countries and supplies them to manufacturers, distributors or employers within the United States.

Label

Written, printed, or graphic material displayed on, or attached to, a container of hazardous chemicals.

Manufacturer

An employer with a workplace where one or more chemicals (including items not exempt as "articles," see Table 1 in this part) are produced for use or distribution.

Material safety data sheet (MSDS)

Written, printed or electronic information (on paper, microfiche, or on-screen) that informs manufacturers, distributors or employers about the chemical, its hazards and protective measures as required by this rule.

Mixture

A combination of two or more chemicals that retain their chemical identify after being combined.

Organic peroxide

An organic compound containing the bivalent-O-O-structure. It may be considered a structural derivative of hydrogen peroxide if one or both of the hydrogen atoms has been replaced by an organic radical.

Oxidizer

A chemical, other than a blasting agent or explosive as defined in WAC 296-52-417 or 29 C.F.R. 1910.109(a), that starts or promotes combustion in other materials, causing fire either of itself or through the release of oxygen or other gases.

Permissible exposure limits

See WAC 296-307-628, for definition of this term.

Physical hazards

A chemical that has scientifically valid evidence to show it is one of the following:

- A combustible liquid
- A compressed gas
- Explosive
- Flammable
- An organic peroxide
- An oxidizer
- Pyrophoric
- Unstable (reactive)
- Water-reactive.

Produce

To do one or more of the following:

- Manufacture
- Process
- Formulate
- Blend
- Extract
- Generate
- Emit
- Repackage.

Pyrophoric

Chemicals that ignite spontaneously in the air at a temperature of 130°F (54.4°C) or below.

Responsible party

Someone who can provide more information about the hazardous chemical and appropriate emergency procedures.

Retailer

See "distributor."

Threshold limit values (TLVs)

Airborne concentrations of substances established by the American Conference of Governmental Industrial Hygienists (ACGIH), and represent conditions under which it is believed that nearly all workers may be repeatedly exposed day after day without adverse health effects.

TLVs are specified in the most recent edition of the *Threshold Limit Values for Chemical Substances and Physical Agents and Biological Exposure Indices* and include the following categories:

- Threshold limit value-time-weighted average (TLV-TWA)
- Threshold limit value-short-term exposure limit (TLV-STEL)
- Threshold limit value-ceiling (TLV-C).

Unstable (reactive)

A chemical in its pure state, or as produced or transported, that will vigorously polymerize, decompose, condense, or become self-reactive under conditions of shocks, pressure or temperature.

Use

To do one or more of the following:

- Package
- Handle
- React
- Emit
- Extract
- Generate as a by-product
- Transfer.

Water-reactive

A chemical that reacts with water to release a gas that is either flammable or presents a heath hazard.

Wholesaler

See "distributor."

[Statutory Authority: RCW 49.17.010, 49.17.040, 49.17.050, 49.17.060. WSR 05-01-166, § 296-307-56050, filed 12/21/04, effective 4/2/05; WSR 03-10-068, § 296-307-56050, filed 5/6/03, effective 8/1/03.]

WAC 296-307-570 Lighting rule. Your responsibility: To provide an maintain adequate lighting in your workplace.

[Statutory Authority: RCW 49.17.010, [49.17].040, and [49.17].050. WSR 01-17-033, § 296-307-570, filed 8/8/01, effective 9/1/01.]

WAC 296-307-57005 Provide and maintain adequate lighting.

Note: This section establishes minimal levels of lighting for safety purposes only. Guidelines pertaining to optimal levels of lighting and illumination may be found in Practice for Industrial Lighting, ANSI/IES RP7-1979.

You must:

- Provide and maintain adequate lighting for all work activities in your workplace. See the following table.

Lighting Table

Activity	Minimum Acceptable average lighting level in an area:	Any one single measurement used to determine the average lighting level* cannot be less than:
	(Foot-candles)	(Foot-candles)
Indoor task	10	5
Outdoor task	5	2.5
Nontask activities for both indoor and outdoor	3	1.5

- Lighting levels must be measured at thirty inches above the floor/working surface or at the task.

You must:

- Have adequate light for employees to see nearby objects that might be potential hazards or to see to operate emergency controls or other equipment, if general lighting is not available.

Note:
- Lighting levels can be measured with a light meter.
- Conversion information: 1 foot candle = 1 lumen incident per square foot = 10.76 lux.

[Statutory Authority: RCW 49.17.010, [49.17].040, and [49.17].050. WSR 01-17-033, § 296-307-57005, filed 8/8/01, effective 9/1/01.]

WAC 296-307-590 Environmental tobacco smoke in the office—Summary.

Your responsibility:

To eliminate exposure to environmental tobacco smoke in your office work environment

You must:

Prohibit tobacco smoke in your office work environment.

WAC 296-307-59005

Note: This rule does not preempt any federal, state, municipal, or other local authority's regulation of indoor smoking that is more protective than this section.

Definitions: *Office work environment* is an indoor or enclosed occupied space where clerical work, administration, or business is carried out.

In addition, it includes:

- Other workplace spaces controlled by the employer and used by office workers, such as cafeterias, meeting rooms, and washrooms.
- Office areas of manufacturing and production facilities, not including process areas.
- Office areas of businesses such as food and beverage establishments, agricultural operations, construction, commercial trade, services, etc.

Smoking

A person is smoking if they are:

- Lighting up
- Inhaling
- Exhaling
- Carrying a pipe, cigar or cigarette of any kind that is burning.

Link: For work environments outside the office, contact your local health department using the link http://www.secondhandsmokesyou.com or by calling them directly.

[Statutory Authority: RCW 49.17.010, 49.17.040, 49.17.050, 49.17.060. WSR 06-22-023, § 296-307-590, filed 10/24/06, effective 12/1/06. Statutory Authority: RCW 49.17.010, [49.17].040, and [49.17].050. WSR 01-17-033, § 296-307-590, filed 8/8/01, effective 9/1/01.]

WAC 296-307-59005 Prohibit tobacco smoke in your office work environment.

EXEMPTION: The minimum criteria specified in this rule do not apply to outdoor structures provided for smokers such as gazebos or lean-tos that maintain the twenty-five-feet distance from entrances, exits, windows that open, and ventilation intakes that serve an enclosed area where smoking is prohibited.

You must:

(1) Prohibit smoking in your office work environment.

(2) Use administrative controls to prevent tobacco smoke from entering your office from outside the building.

- Make sure that outside smoking areas used by your employees are at least twenty-five feet from entrances, exits, windows that open, and ventilation intakes that serve an enclosed area where smoking is prohibited.

[Statutory Authority: RCW 49.17.010, 49.17.040, 49.17.050, 49.17.060. WSR 06-22-023, § 296-307-59005, filed 10/24/06, effective 12/1/06. Statutory Authority: RCW 49.17.010, [49.17].040, and [49.17].050. WSR 01-17-033, § 296-307-59005, filed 8/8/01, effective 9/1/01.]

Part Y-3

Lighting

Part Y-4

Environmental Tobacco Smoke in the Office

Part Y-5

Respirators

WAC 296-307-594 Scope. This part applies to all use of respirators at work.

IMPORTANT:

Before you decide to use respirators, you are required to evaluate respiratory hazards and implement control methods as outlined in WAC 296-307-624 through 296-307-628, Respiratory hazards.

The term "respiratory hazards" will be used throughout this part to refer to oxygen deficient conditions and harmful airborne hazards.

Definition:

Respirators are a type of personal protective equipment designed to protect the wearer from respiratory hazards.

You can use Table 1 for general guidance on which sections apply to you.

Table 1
Sections that apply to your workplace

	Then the sections marked with an "X" apply...					
If employees...	596	598	600	602-618	620	622
Request and are **permitted** to voluntarily use filtering-facepiece respirators, and are not exposed to a respiratory hazard		X				X
Request and are **permitted** to voluntarily use respirators that are **NOT** filtering-facepiece respirators, and are not exposed to a respiratory hazard	X	X			X	X
Are **required** to use any respirator by WISHA or the employer	X		X	X	X	X
Would use an **escape respirator** in an emergency	X		X	X	X	X

Reference: See WAC 296-307-100, Personal protective equipment (PPE) to find requirements for other types of personal protective equipment (PPE), such as eye, hand, and head protection.

[Statutory Authority: RCW 49.17.010, 49.17.040, 49.17.050, 49.17.060. WSR 05-01-166, § 296-307-594, filed 12/21/04, effective 4/2/05.]

WAC 296-307-596 Respirator program administrator.

Your responsibility:

To make sure a capable individual is in charge of respirator program development and management.

[Statutory Authority: RCW 49.17.010, 49.17.040, 49.17.050, 49.17.060. WSR 05-01-166, § 296-307-596, filed 12/21/04, effective 4/2/05.]

WAC 296-307-59605 Designate a program administrator.

Exemption: You do not need to designate a program administrator if employees use only filtering-facepiece respirators and do so only as voluntary use.

Definition:

Voluntary use is respirator use that is requested by the employee AND permitted by the employer when **NO** respiratory hazard exists.

You must:

• Designate a program administrator who has overall responsibility for your program and has sufficient training or experience to:

- Oversee program development and coordinate implementation

- Conduct required evaluations of program effectiveness outlined in WAC 296-307-60005.

[Statutory Authority: RCW 49.17.010, 49.17.040, 49.17.050, 49.17.060. WSR 05-01-166, § 296-307-59605, filed 12/21/04, effective 4/2/05.]

WAC 296-307-598 Voluntary respirator use requirements.

Your responsibility:

To make sure voluntary use of respirators by employees does not create job safety or health hazards.

You must:

Make sure voluntary use of respirators is safe
WAC 296-307-59805

Keep voluntary use respirator program records
WAC 296-307-59810.

IMPORTANT:

• Respirator use is NOT voluntary if a respiratory hazard, such as exposure to a substance over the permissible exposure limit (PEL) or hazardous exposure to an airborne biological hazard, is present.

• To evaluate respiratory hazards in your workplace, see WAC 296-307-624, Respiratory hazards.

• Some requirements in this section do not apply if only filtering-facepiece respirators are used voluntarily. Some filtering-facepiece respirators are equipped with a sorbent layer for absorbing "nuisance" organic vapors. These can be used for voluntary use, but are not NIOSH certified for protection against hazardous concentrations of organic vapor.

[Statutory Authority: RCW 49.17.010, 49.17.040, 49.17.050, 49.17.060. WSR 05-01-166, § 296-307-598, filed 12/21/04, effective 4/2/05.]

WAC 296-307-59805 Make sure voluntary use of respirators is safe.

Definition:

Voluntary use is respirator use that is requested by the employee AND permitted by the employer when **NO** respiratory hazard exists.

IMPORTANT: If you choose to require respirator use, use is NOT voluntary and the required use sections of this part apply.

You must:

(1) Make sure voluntary respirator use does **NOT:**

• Interfere with an employee's ability to work safely, such as restricting necessary vision or radio communication

OR

• Create health hazards.

Note: Examples of health hazards include:

• Skin irritation, dermatitis, or other health effects caused by using a dirty respirator

• Illness created by sharing contaminated respirators

• Health effects caused by use of an unsafe air supply, such as carbon monoxide poisoning.

You must:

(2) Provide all voluntary respirator users with the advisory information in Table 2 at no cost to them.

Note: If you have provided employees with the advisory information required in the previous section, WAC 296-307-598, you do not need to provide the additional information in Table 2 to those employees.

You must:

(3) Develop and maintain a written program that includes the following:

• Medical evaluation provisions as specified in WAC 296-307-604.

• Procedures to properly clean and disinfect respirators, according to WAC 296-307-62015, if they are reused.

• How to properly store respirators, according to WAC 296-307-61010, so that using them does not create hazards.

• Procedures to make sure there is a safe air supply, according to WAC 296-307-616, when using air-line respirators and SCBAs.

• Training according to WAC 296-307-608 when necessary to ensure respirator use does NOT create a hazard.

Note:

• Pay for medical evaluations, training, travel related costs, and wages. You do **NOT** need to pay for respirators employees use only voluntarily.

• If you have both voluntary and required respirator users, you may choose to treat voluntary users as required users. Doing this exceeds the requirements in this section.

Exemption: If employees use only filtering-facepiece respirators and do so only voluntarily, you do not need to develop and maintain a written program.

Use Table 2 to provide information to employees who voluntarily use any type of respirator.

Table 2

Advisory Information for Employees Who Voluntarily Use Respirators
• Respirators protect against airborne hazards when properly selected and used. WISHA recommends voluntary use of respirators when exposure to substances is below WISHA permissible exposure limits (PELs) because respirators can provide you an additional level of comfort and protection.
• If you choose to voluntarily use a respirator (whether it is provided by you or your employer) be aware that **respirators can create hazards for you,** the user. You can avoid these hazards if you know how to use your respirator properly AND how to keep it clean. Take these steps:
- Read and follow all instructions provided by the manufacturer about use, maintenance (cleaning and care), and warnings regarding the respirator's limitations.
- Choose respirators that have been certified for use to protect against the substance of concern. The National Institute for Occupational Safety and Health (NIOSH) certifies respirators. If a respirator is not certified by NIOSH, you have no guarantee that it meets minimum design and performance standards for workplace use.
■ A NIOSH approval label will appear on or in the respirator packaging. It will tell you what protection the respirator provides.
- Keep track of your respirator so you do not mistakenly use someone else's.
- **DO NOT** wear your respirator into:
■ Atmospheres containing hazards that your respirator is not designed to protect against.
For example, a respirator designed to filter dust particles will not protect you against solvent vapor, smoke or oxygen deficiency.
■ Situations where respirator use is required.

[Statutory Authority: RCW 49.17.010, 49.17.040, 49.17.050, 49.17.060. WSR 05-01-166, § 296-307-59805, filed 12/21/04, effective 4/2/05.]

WAC 296-307-59810 Keep voluntary use program records.

Exemption: If employees use only filtering-facepiece respirators voluntarily, you do not need to follow these recordkeeping requirements.

You must:

• Keep copies of:

- Your current written respirator program
- Written recommendations from the LHCP

• Allow records required by this section to be examined and copied by affected employees and their representatives.

[Statutory Authority: RCW 49.17.010, 49.17.040, 49.17.050, 49.17.060. WSR 05-01-166, § 296-307-59810, filed 12/21/04, effective 4/2/05.]

WAC 296-307-600 Written respirator program and recordkeeping.

Your responsibility:

To develop, implement, and maintain a written program that provides clear instruction for safe and reliable respirator use.

You must:

Develop and maintain a written program
WAC 296-307-60005
Keep respirator program records
WAC 296-307-60010.

[Statutory Authority: RCW 49.17.010, 49.17.040, 49.17.050, 49.17.060. WSR 05-01-166, § 296-307-600, filed 12/21/04, effective 4/2/05.]

WAC 296-307-60005 Develop and maintain a written program.

Exemption: This section does **NOT** apply to respirator use that is voluntary. See WAC 296-307-59805 for voluntary use program requirements.

You must:

(1) Develop a complete worksite-specific written respiratory protection program that includes the applicable elements listed in Table 3.

Note: Pay for respirators, medical evaluations, fit testing, training, maintenance, travel costs, and wages.

You must:

(2) Keep your program current and effective by evaluating it and making corrections. Do ALL of the following:

• Make sure procedures and program specifications are followed and appropriate.

• Make sure selected respirators continue to be effective in protecting employees. For example:

- If changes in work area conditions, level of employee exposure, or employee physical stress have occurred, you need to reevaluate your respirator selection.

• Have supervisors periodically monitor employee respirator use to make sure employees are using them properly.

• Regularly ask employees required to use respirators about their views concerning program effectiveness and whether they have problems with:

- Respirator fit during use
- Any effects of respirator use on work performance
- Respirators being appropriate for the hazards encountered
- Proper use under current worksite conditions
- Proper maintenance.

When developing your written program include applicable elements listed in Table 3.

Table 3

Required Elements for Required-Use Respirator Programs
• Selection: - Procedures for respirator selection - A list specifying the appropriate respirator for each respiratory hazard in your workplace - Procedures for issuing the proper type of respirator, if appropriate
• Medical evaluation provisions
• Fit-test provisions and procedures, if tight-fitting respirators are selected
• Training provisions that address: - Respiratory hazards encountered during: ■ Routine activities ■ Infrequent activities, for example, bimonthly cleaning of equipment ■ Reasonably foreseeable emergencies, for example, rescue, spill response, or escape situations - Proper use of respirators, for example, how to put on or remove respirators, and use limitations. **Note:** You do NOT need to repeat training on respiratory hazards if employees have been trained on this in compliance with other rules such as WAC 296-307-550, employer chemical hazard communication.
• Respirator use procedures for: - Routine activities - Infrequent activities - Reasonably foreseeable emergencies
• Maintenance: - Procedures and schedules for respirator maintenance covering: ■ Cleaning and disinfecting ■ Storage ■ Inspection and repair ■ When to discard respirators - A cartridge or canister change schedule **IF** air-purifying respirators are selected for use against gas or vapor contaminants AND an end-of-service-life-indicator (ESLI) is not available. In addition, provide: ■ The data and other information you relied on to calculate change schedule values (for example, highest contaminant concentration estimates, duration of employee respirator use, expected maximum humidity levels, user breathing rates, and safety factors)
• Procedures to ensure a safe air quantity and quality **IF** atmosphere-supplying respirators (air-line or SCBA) are selected
• Procedures for evaluating program effectiveness on a regular basis

[Statutory Authority: RCW 49.17.010, 49.17.040, 49.17.050, 49.17.060. WSR 05-01-166, § 296-307-60005, filed 12/21/04, effective 4/2/05.]

WAC 296-307-60010 Keep respirator program records.

You must:

• Keep the following records:

- Your current respirator program

- Each employee's current fit test record, if fit testing is conducted. Fit test records must include:

■ Employee name

■ Test date

■ Type of fit-test performed

■ Description (type, manufacturer, model, style, and size) of the respirator tested

■ Results of fit tests, for example, for quantitative fit tests include the overall fit factor AND a print out, or other recording of the test.

- Training records that include employee's names and the dates trained

- Written recommendations from the LHCP.

• Allow records required by this section to be examined and copied by affected employees and their representatives.

[Statutory Authority: RCW 49.17.010, 49.17.040, 49.17.050, 49.17.060. WSR 05-01-166, § 296-307-60010, filed 12/21/04, effective 4/2/05.]

WAC 296-307-602 Respirator selection.

Your responsibility:

To select and provide respirators that are appropriate for the hazard, user, and worksite conditions.

Exemption: This section does NOT apply to voluntary respirator use. See WAC 296-307-598 of this part for voluntary use program requirements.

[Statutory Authority: RCW 49.17.010, 49.17.040, 49.17.050, 49.17.060. WSR 05-01-166, § 296-307-602, filed 12/21/04, effective 4/2/05.]

WAC 296-307-60205 Select and provide appropriate respirators.

IMPORTANT:

See WAC 296-307-624, Respiratory hazards, for:

• Hazard evaluation requirements. Evaluation results are necessary for respirator selection.

• A list of substance-specific rules that may also apply to you. Those listed rules have additional respirator selection requirements.

You must:

• Select and provide, at no cost to employees, appropriate respirators for routine use, infrequent use, and reasonably foreseeable emergencies (such as escape, emergency, and spill response situations) by completing the following process:

Respirator Selection Process

Step 1: If your only respirator use is for escape, skip to **Step 8** to select appropriate respirators.

Step 2: If the respiratory hazard is a biological aerosol, such as TB (tuberculosis), anthrax, psittacosis (parrot fever), or hanta virus, select a respirator appropriate for **nonemergency** activities recognized to present a health risk to workers AND skip to **Step 8.**

• If respirator use will occur during **emergencies,** skip to **Step 8** and document the analysis used to select the appropriate respirator.

• Use Centers for Disease Control (CDC) selection guidance for exposures to specific biological agents when this guidance exists. Visit http://www.cdc.gov.

Step 3: If the respiratory hazard is a pesticide, follow the respirator specification on the pesticide label AND skip to **Step 9.**

Step 4: Determine the expected exposure concentration for each respiratory hazard of concern. Use the results from the evaluation required by WAC 296-307-624, Respiratory hazards.

Step 5: Determine if the respiratory hazard is classified as IDLH; if it is NOT IDLH skip to **Step 7.**

• The respiratory hazard **IS** classified as IDLH if:

- The atmosphere is oxygen deficient or oxygen enriched

OR

- You CANNOT measure or estimate your expected exposure concentration

OR

- Your measured or estimated expected exposure concentration is greater or equal to the IDLH value in the NIOSH *Pocket Guide to Chemical Hazards*

Note: • WISHA uses the IDLH values in the 1990 edition of the NIOSH *Pocket Guide to Hazardous Chemicals* to determine the existence of IDLH conditions. You may use more recent editions of this guide. Visit www.cdc.gov/niosh for more information.

• If your measured or estimated expected exposure concentration is below NIOSH's IDLH values, proceed to **Step 7.**

Step 6: Select an appropriate respirator from one of the following respirators for IDLH conditions and skip to **Step 8:**

• Full-facepiece, pressure demand, self-contained breathing apparatus (SCBA) certified by NIOSH for a minimum service life of thirty minutes

OR

• Full-facepiece, pressure demand air-line respirator equipped with an auxiliary self-contained air supply

Exception: If the respiratory hazard is oxygen deficiency AND you can show oxygen concentrations can be controlled within the ranges listed in Table 4 under ALL foreseeable conditions, you are allowed to select **ANY** type of SCBA or air-line respirator.

Table 4
Concentration Ranges for Oxygen Deficiency

Altitude (as ft. above sea level)	**Oxygen Concentration Range** (as percent oxygen)
Below 3,001	16.0 - 19.5
3,001 - 4,000	16.4 - 19.5
4,001 - 5,000	17.1 - 19.5
5,001 - 6,000	17.8 - 19.5
6,001 - 8,000	19.3 - 19.5
Above 8,000 feet the exception does not apply.	

Step 7: Identify respirator types with assigned protection factors (APFs) from Table 5 that are appropriate to protect employees from the expected exposure concentration.

Step 8: Consider hazards that could require selection of specific respirator types. For example, select full-facepiece respirators to prevent eye irritation or abrasive blasting helmets to provide particle rebound protection.

Step 9: Evaluate user and workplace factors that might compromise respirator performance, reliability or safety.

• If the respiratory hazard is a pesticide, follow the requirements on the pesticide label and skip to **Step 11.**

Examples:

• High humidity or temperature extremes in the workplace.

• Necessary voice communication.

• High traffic areas and moving machinery.

• Time or distance for escape.

Step 10: Follow Table 6 requirements to select an air-purifying respirator.

• If Table 6 requirements cannot be met, you must select an air-line respirator or an SCBA.

Step 11: Make sure respirators you select are certified by the National Institute for Occupational Safety and Health (NIOSH).

• To maintain certification, make sure the respirator is used according to cautions and limitations specified on the NIOSH approval label.

Note: While selecting respirators, you will need to select a sufficient number of types, models or sizes to provide for fit testing. You can also consider other respirator use issues, such as accommodating facial hair with a loose fitting respirator.

Use Table 5 to identify the assigned protection factor for different types of respirators.

Table 5
Assigned Protection Factors (APF) for Respirator Types

If the respirator is a(n) . . .	Then the APF is . . .
Air-purifying respirator with a:	
• Half-facepiece	10
• Full-facepiece	100
Note: Half-facepiece includes 1/4 masks, filtering facepieces, and elastomeric facepieces.	
Powered air-purifying respirator (PAPR) with a:	
• Loose-fitting facepiece	25
• Half-facepiece	50
• Full-facepiece, equipped with HEPA filters, chemical cartridges or canisters	1000
• Hood or helmet, equipped with HEPA filters, chemical cartridges or canisters	1000
Air-line respirator with a:	
• Half-facepiece and designed to operate in demand mode	10
• Loose-fitting facepiece and designed to operate in continuous flow mode	25
• Half-facepiece and designed to operate in continuous-flow, or pressure-demand mode	50
• Full-facepiece and designed to operate in demand mode	100
• Full-facepiece and designed to operate in continuous-flow OR pressure-demand mode	1000
• Helmet or hood and designed to operate in continuous-flow mode	1000
Self-contained breathing apparatus (SCBA) with a tight fitting:	
• Half-facepiece and designed to operate in demand mode	10
• Full-facepiece and designed to operate in demand mode	100
• Full-facepiece and designed to operate in pressure-demand mode	10,000
Combination respirators: • Find the APF for each type of respirator in the combination. • Use the lower APF to represent the combination.	The lowest value

Use Table 6 to select air-purifying respirators for particle, vapor, or gas contaminants.

Table 6
Requirements for Selecting Any Air-purifying Respirator

If the contaminant is a . . .	Then . . .
• Gas OR vapor	• Provide a respirator with canisters or cartridges equipped with a NIOSH-certified, end-of-service-life indicator (ESLI) **OR** • If a canister or cartridge with an ESLI is NOT available, develop a cartridge change schedule to make sure the canisters or cartridges are replaced before they are no longer effective **OR** • Select an atmosphere-supplying respirator
• Particle, such as a dust, spray, mist, fog, fume, or aerosol	• Select respirators with filters certified to be at least 95% efficient by NIOSH - For example, N95s, R99s, P100s, or High Efficiency Particulate Air filters (HEPA) **OR** • You may select respirators NIOSH certified as "dust and mist," "dust, fume, or mist," OR "pesticides." You can only use these respirators if particles primarily have a mass median aerodynamic diameter of at least two micrometers. **Note:** These respirators are no longer sold for occupational use.

[Statutory Authority: RCW 49.17.010, 49.17.040, 49.17.050, 49.17.060. WSR 05-01-166, § 296-307-60205, filed 12/21/04, effective 4/2/05.]

WAC 296-307-604 Medical evaluations.

Your responsibility:

To make sure a respirator used under your specific worksite conditions is not a health risk to employees.

Exemption: This section does **NOT** apply to employees who **only** use:

• Filtering-facepiece respirators voluntarily. See WAC 296-307-598 of this part for voluntary use requirements

OR

• Escape-only respirators that are mouthpiece, loose-fitting, or hooded respirators.

IMPORTANT:

• Using a respirator can create physical risks for an employee each time it is worn. The extent of these risks depends on these factors:

- Type of respirator
- Environmental conditions at the worksite
- Physical demands of the work
- Use of other protective clothing
- Employee's health status.

[Statutory Authority: RCW 49.17.010, 49.17.040, 49.17.050, 49.17.060. WSR 05-01-166, § 296-307-604, filed 12/21/04, effective 4/2/05.]

WAC 296-307-60405 Provide medical evaluations.

IMPORTANT:

If you have provided an employee with a medical evaluation addressing respirator use, as required by another chapter, that evaluation will meet the requirements of this section.

You must:

• Follow the medical evaluation process, Steps 1 through 7 in this section, to provide medical evaluations for employees at no cost to them.

Medical Evaluation Process

Step 1: Identify employees who need medical evaluations AND determine the frequency of evaluations from Table 7. Include employees who:

• Are required to use respirators

OR

• Voluntarily use respirators that are **not** filtering-facepiece respirators

Note: You may use a previous employer's medical evaluation for an employee if you can:

• Show the employee's previous work and use conditions were substantially similar to yours

AND

• Obtain a copy of the licensed health care professional's (LHCP's) written recommendation approving the employee's use of the respirator chosen by you.

Step 2: Identify a licensed health care professional (LHCP) to perform your medical evaluations.

Note: If you select a different LHCP, you do not need to have new medical evaluations done.

Step 3: Make sure your LHCP has the following information **before** the evaluation is completed:

• Information describing the respirators employees may use, including the weight and type.

• How the respirators will be used, including:

- How often the respirator will be used, for example, daily, or once a month
- The duration of respirator use, for example, a minimum of one hour, or up to twelve hours
- The employee's expected physical work effort
- Additional personal protective clothing and equipment to be worn
- Temperature and humidity extremes expected during use

• A copy of your written respiratory protection program **and** this part.

Note:

• You may choose to send the questionnaire to the LHCP ahead of time, giving time to review it and add any necessary questions

• The LHCP determines what questions to add to the questionnaire, if any; however, questions in Parts 1-3 may not be deleted or substantially altered.

Step 4: Administer the medical questionnaire in WAC 296-307-61605 to employees, OR provide them a medical exam that obtains the same information.

Note: You may use online questionnaires if the questions are the same and requirements of this section are met.

• Administer the examination or questionnaire at no cost to employees:

- During the employee's normal working hours

OR

- At a time and place convenient to the employee

• Maintain employee confidentiality during examination or questionnaire administration:

- Do **not** view employee's answers on the questionnaire
- Do **not** act in a manner that may be considered a breach of confidentiality

Note: Providing confidentiality is important for securing successful medical evaluations. It helps make sure the LHCP gets complete and dependable answers on the questionnaire.

• Make sure employees understand the content of the questionnaire.

• Provide the employee with an opportunity to discuss the questionnaire or exam results with the LHCP.

Step 5: Provide follow-up evaluation for employees when:

• The LHCP needs more information to make a final recommendation

OR

• An employee gives any positive response to questions 1-8 in Part 2 OR to questions 1-6 in Part 3 of the WISHA medical evaluation questionnaire in WAC 296-307-61605.

Note: Follow-up may include:

• Employee consultation with the LHCP such as a telephone conversation to evaluate positive questionnaire responses

• Medical exams

• Medical tests or other diagnostic procedures.

Step 6: Obtain a written recommendation from the LHCP that contains only the following medical information:

• Whether or not the employee is medically able to use the respirator

• Any limitations of respirator use for the employee

• What future medical evaluations, if any, are needed

• A statement that the employee has been provided a copy of the written recommendation.

Step 7: Provide a powered, air-purifying respirator (PAPR) when the LHCP determines the employee should not wear a negative-pressure air-purifying respirator **AND** is able to wear a PAPR.

Reference: See WAC 296-307-602 for requirements regarding selection of air-purifying respirators.

Note: • You may discontinue medical evaluations for an employee when the employee no longer uses a respirator.

• If you have staff conducting your medical evaluations, they may keep completed questionnaires and findings as confidential medical records, if they are maintained separately from other records.

Use Table 7 to determine medical evaluation frequency.

Table 7
Evaluation Frequency

Type of Evaluation:	When required:
Initial medical evaluations	• Before respirators are fit-tested or used in the workplace.
Subsequent medical evaluations	• If any of these occur: - Your licensed health care professional (LHCP) recommends them; for example, periodic evaluations at specified intervals. - A respirator program administrator or supervisor informs you that an employee needs reevaluation. - Medical signs or symptoms (such as breathing difficulties) are: ■ Observed during fit-testing or program evaluation **OR** ■ Reported by the employee - Changes in worksite conditions such as physical work effort, personal protective clothing, or temperature that could substantially increase the employee's physiological stress.

[Statutory Authority: RCW 49.17.010, 49.17.040, 49.17.050, 49.17.060. WSR 05-01-166, § 296-307-60405, filed 12/21/04, effective 4/2/05.]

WAC 296-307-606 Fit testing.

Your responsibility:

To make sure negative and positive-pressure tight-fitting respirators can provide an adequate fit and acceptable level of comfort to employees.

Exemption: This section does NOT apply to any respirators that are:
• Voluntarily used. See WAC 296-307-598 for voluntary use requirements.
• Mouthpiece respirators.

IMPORTANT:

• Fit testing is an activity where the seal of a respirator is tested to determine if it is adequate.

• This section covers general **requirements** for fit testing. Fit-testing **procedures** are covered in WAC 296-307-62010 of this part.

[Statutory Authority: RCW 49.17.010, 49.17.040, 49.17.050, 49.17.060. WSR 05-01-166, § 296-307-606, filed 12/21/04, effective 4/2/05.]

WAC 296-307-60605 Conduct fit testing.

You must:

• Provide, at no cost to the employee, fit tests for ALL tight fitting respirators on the following schedule:

- Before employees are assigned duties that may require the use of respirators
- At least every twelve months after initial testing
- Whenever any of the following occurs:

■ A different respirator facepiece is chosen such as a different type, model, style, or size

■ You become aware of a physical change in an employee that could affect respirator fit. For example, you may observe, or be told about, facial scarring, dental changes, cosmetic surgery, or obvious weight changes

■ An employee notifies you, or your LHCP, that the respirator fit is unacceptable. During the retest, you must give an employee reasonable opportunity to select a different respirator facepiece (size, model, etc.).

Note: You may accept a fit test completed by a previous employer IF:
• You obtain written documentation of the fit test
AND
• The results of the fit test are not more than twelve months old
AND
• The employee will use the same respirator (the same type, model, style, and size)
AND
• The fit test was conducted in a way that meets the requirements of WAC 296-307-606 and 296-307-62010.

You must:

• Select an appropriate fit-testing procedure from WAC 296-307-62010 of this part AND:

- Use quantitative fit-test methods when a negative pressure respirator will be used in concentrations requiring a protection factor greater than 10. This includes:

■ Full facepiece air-purifying respirators
■ SCBAs operated in demand (negative pressure) mode
■ Air-line respirators operated in demand mode.

- Make sure PAPRs, SCBAs, or air-line respirators are fit tested in negative-pressure mode.

• Make sure the person conducting fit testing is able to do ALL of the following:

- Prepare test solutions if required
- Make sure equipment works properly
- Perform tests properly
- Recognize invalid tests
- Calculate fit factors properly if required.

Note:
• No specific training program or certification is required for those who conduct fit tests.
• You should consider evaluating these individuals to determine their proficiency in the fit-testing method to be used.
• You can use an evaluation form such as the form included in the American National Standard for Respirator Fit Testing Methods, ANSI/AIHA Z88.10-2001 to determine if the individual meets these requirements. Visit www.ansi.org or www.aiha.org.

[Statutory Authority: RCW 49.17.010, 49.17.040, 49.17.050, 49.17.060. WSR 05-01-166, § 296-307-60605, filed 12/21/04, effective 4/2/05.]

WAC 296-307-608 Training.

Your responsibility:

To make sure employees who are required to use respirators understand and can demonstrate proper respirator use and maintenance.

IMPORTANT:

This section applies to employees who voluntarily use respirators only when training is necessary to prevent the respirator from creating a hazard. See WAC 296-307-598 for voluntary use requirements.

[Statutory Authority: RCW 49.17.010, 49.17.040, 49.17.050, 49.17.060. WSR 05-01-166, § 296-307-608, filed 12/21/04, effective 4/2/05.]

WAC 296-307-60805 Provide effective training.

You must:

• Train employees, based on their duties, if they do any of the following:

- Use respirators
- Supervise respirator users
- Issue, repair, or adjust respirators

• Present effective training in a way that employees understand.

Note:
• Training may be provided using audiovisuals, slide presentations, formal classroom instruction, informal discussions during safety meetings, training programs conducted by outside sources, or a combination of these methods.
• You may want to have instructors available when using video or automated training methods to:
- Encourage and provide responses to questions for the benefit of employees
- Evaluate employees' understanding of the material
- Provide other instructional interaction to employees.

You must:

• Make sure a qualified instructor provides training

• Provide training, at no cost to the employee, at these times:

- Initially, before worksite respirator use begins
- Periodically, within twelve months of the previous training
- Additionally, when the following occur:

■ The employee has not retained knowledge or skills

OR

■ Changes in the worksite, or type of respirator make previous training incomplete or obsolete.

Note:
• You may accept an employee's previous training, such as training provided by another employer, to satisfy the initial training requirement if:
- You can demonstrate the employee received training within the past twelve months

AND

- The employee can demonstrate the knowledge and skills to use required respirators effectively.
• If you accept an employee's previous training to satisfy the initial training requirement, you are still responsible for providing periodic, and additional training when needed. Periodic training would need to be provided within twelve months of the employee's previous training.

You must:

• Make sure employees can demonstrate the following knowledge and skills as required by their duties:

- Why the respirator is necessary. Include, for example, information identifying respiratory hazards such as hazardous chemicals, the extent of the employee's exposure, and potential health effects and symptoms
- The respirator's capabilities and limitations. Include, for example, how the respirator provides protection and why air-purifying respirators cannot be used in oxygen-deficient conditions
- How improper fit, use, or maintenance can compromise the respirator's effectiveness and reliability
- How to properly inspect, put on, seal check, use, and remove the respirator
- How to clean, disinfect, repair, and store the respirator, or how to get this done by someone else
- How to use the respirator effectively in emergency situations; including what to do when a respirator fails and where emergency respirators are stored
- Medical signs and symptoms that may limit or prevent the effective use of respirators such as shortness of breath or dizziness
- The employer's general obligations under this part. For example, developing a written program, selecting appropriate respirators, and providing medical evaluations.

[Statutory Authority: RCW 49.17.010, 49.17.040, 49.17.050, 49.17.060. WSR 05-01-166, § 296-307-60805, filed 12/21/04, effective 4/2/05.]

WAC 296-307-610 Maintenance.

Your responsibility:

To make sure respirators are maintained so they will function properly and not create health hazards such as skin irritation.

You must:

Maintain respirators in a clean and reliable condition
WAC 296-307-61005
Store respirators properly
WAC 296-307-61010
Inspect and repair respirators
WAC 296-307-61015

IMPORTANT:

This section applies to employees who voluntarily use respirators only when maintenance is necessary to prevent the respirator from creating a hazard. See WAC 296-307-598 for voluntary use requirements.

WSR 05-01-166, § 296-307-610, filed 12/21/04, effective 4/2/05.]

WAC 296-307-61005 Maintain respirators in a clean and reliable condition.

You must:

• Make sure respirators are kept, at no cost to the employee, clean, sanitary and in good working order. Do at least the following:

- Clean and disinfect respirators as often as specified in Table 8 of this section.

Note: • Use required cleaning and disinfecting procedures in WAC 296-307-62015, **or** the manufacturer's procedures that:
- Result in a clean and sanitary respirator
- Do not damage the respirator
- Do not harm the user
• Automated cleaning and disinfecting are permitted
• Cleaning and disinfecting may be done by a central facility as long as you make sure respirators provided are clean, sanitary, and function properly.

You must:

• Make sure respirators are assembled properly after cleaning or disinfecting.

Use Table 8 to determine how often to clean and disinfect respirators.

Table 8
Required Frequencies for Cleaning and Disinfecting Respirators

If, the respirator will be . . .	**Then, clean and disinfect the respirator . . .**
• **Used exclusively** by one employee	• As often as needed to: - Keep it clean and functional **AND** - To prevent health hazards such as skin irritation
• Shared for nonemergency use **OR** • Used for fit-testing or training	• **Before** it is worn by another employee
• Shared for emergency use	• **After** each use so the respirator is immediately ready for use at all times

[Statutory Authority: RCW 49.17.010, 49.17.040, 49.17.050, 49.17.060. WSR 05-01-166, § 296-307-61005, filed 12/21/04, effective 4/2/05.]

WAC 296-307-61010 Store respirators properly.

You must:

• Store respirators to protect them from ALL of the following:

- Deformation of the facepiece or exhalation valve
- Sunlight or extreme temperatures or other conditions
- Contamination such as dust or damaging chemicals
- Excessive moisture.

Note: Use coffee cans, sealable plastic bags, or other suitable means of protection.

You must:

• Follow these additional requirements for emergency respirators:

- Keep respirators accessible to the work area
- Store respirators in compartments or with covers clearly marked as containing emergency respirators
- Follow additional storage instructions from the respirator manufacturer
- Store an adequate number of emergency respirators in each area where they may be needed.

Note: Emergency respirators include mouthpiece respirators and other respirators that are limited to escape-only use by their NIOSH certification.

[Statutory Authority: RCW 49.17.010, 49.17.040, 49.17.050, 49.17.060. WSR 05-01-166, § 296-307-61010, filed 12/21/04, effective 4/2/05.]

WAC 296-307-61015 Inspect and repair respirators.

You must:

• Conduct respirator inspections as often as specified in Table 9.

• Make sure respirator inspections cover **all** of the following:

- Respirator function
- Tightness of connections
- The condition of the facepiece, head straps, valves, connecting tubes, and cartridge, canisters or filters
- Pliability and deterioration of elastomeric parts
- Maintenance of air or oxygen cylinders
- Making sure SCBA air cylinders are at ninety percent of the manufacturer's recommended pressure level
- Proper functioning of SCBA regulators when air-flow is activated
- Proper functioning of SCBA low-pressure warning devices when activated

• Certify inspections for emergency respirators by documenting the following:

- Inspection date
- Serial number of each respirator or other identifying information
- Inspector's name or signature
- Inspection findings
- Required action, if problems are found.

Note: • When documenting inspections you may either:
- Provide the information on a tag or label and attach it to the respirator compartment
OR
- Include the information in an inspection report stored in paper or electronic files accessible to employees.

You must:

• Repair or replace any respirator that is not functioning properly **before** the employee returns to a situation where respirators are required.

- If respirators fail inspection or are not functioning properly during use due to problems such as leakage, vapor or gas breakthrough, or increased breathing resistance, **ALL** of the following apply:

■ Do **NOT** permit such respirators to be used until properly repaired or adjusted

■ Use only NIOSH-certified parts

■ Make sure repairs and adjustments are made by appropriately trained individuals

- Use the manufacturer or a technician trained by the manufacturer to repair or adjust reducing and admission valves, regulators, and warning devices on SCBAs or air-line respirators.

■ Follow the manufacturer's recommendations and specifications for the type and extent of repairs.

Use Table 9 to determine how often to inspect respirators.

Table 9
Required Frequencies for Respirator Inspections

If the respirator is . . .	Then inspect . . .
A SCBA in any use	• Before **each** use **AND** • During cleaning **OR** • Monthly if **NOT** used
Used for nonemergencies, including day-to-day or infrequent use	• Inspect before each use **AND** • During cleaning
Used only for emergencies	• Check for proper function before **and** after **each** use **AND** • Inspect at least monthly as instructed by the manufacturer
Used for escape-only purposes	• Before carrying into a work place for use

[Statutory Authority: RCW 49.17.010, 49.17.040, 49.17.050, 49.17.060. WSR 05-01-166, § 296-307-61015, filed 12/21/04, effective 4/2/05.]

WAC 296-307-612 Safe use and removal of respirators.

Your responsibility:

To make sure respirator use and removal is safe.

Exemption: These sections do **NOT** apply to employees who voluntarily use any type of respirator. See WAC 296-307-598 for voluntary use requirements.

You must:

Prevent sealing problems with tight-fitting respirators

WAC 296-307-61205

Make sure employees leave the use area before removing respirators

WAC 296-307-61210.

[Statutory Authority: RCW 49.17.010, 49.17.040, 49.17.050, 49.17.060. WSR 05-01-166, § 296-307-612, filed 12/21/04, effective 4/2/05.]

WAC 296-307-61205 Prevent sealing problems with tight-fitting respirators.

You must:

• Make sure employees use the procedure in WAC 296-307-62020 to perform a user seal check each time they put on their tight-fitting respirator.

• Make sure you do NOT permit respirator use if employees have a characteristic that interferes with the respirator facepiece seal or valve function. For example, stubble, moustaches, sideburns, bangs, hairlines, or scars between the face and the sealing surface of the respirator will affect the seal.

• Make sure corrective glasses or personal protective equipment (PPE) do **NOT** interfere with the facepiece seal. Examples of PPE include safety glasses, goggles, faceshields, clothing, and hard hats.

[Statutory Authority: RCW 49.17.010, 49.17.040, 49.17.050, 49.17.060. WSR 05-01-166, § 296-307-61205, filed 12/21/04, effective 4/2/05.]

WAC 296-307-61210 Make sure employees leave the use area before removing respirators.

You must:

• Make sure employees leave the use area for **any** of these reasons:

- To replace air-purifying filters, cartridges, or canisters
- When they smell or taste (detect) vapor or gas leakage from, for example, cartridges, canister, or the facepiece seal
- When they detect changes in breathing resistance
- To readjust their respirators
- To wash their faces and respirators as necessary to prevent skin or eye irritation
- If they become ill
- If they experience sensations of dizziness, nausea, weakness, breathing difficulty, coughing, sneezing, vomiting, fever, or chills.

[Statutory Authority: RCW 49.17.010, 49.17.040, 49.17.050, 49.17.060. WSR 05-01-166, § 296-307-61210, filed 12/21/04, effective 4/2/05.]

WAC 296-307-614 Standby requirements for immediately dangerous to life or health (IDLH) conditions.

Your responsibility:

To provide adequate assistance to employees using respirators in conditions immediately dangerous to life or health (IDLH).

[Statutory Authority: RCW 49.17.010, 49.17.040, 49.17.050, 49.17.060. WSR 05-01-166, § 296-307-614, filed 12/21/04, effective 4/2/05.]

WAC 296-307-61405 Provide standby assistance in immediately dangerous to life or health (IDLH) conditions.

IMPORTANT:

WISHA currently uses the IDLH values in the 1990 NIOSH *Pocket Guide to Chemical Hazards* to determine the existence of IDLH conditions. You may use more recent editions of this guide. Visit www.cdc.gov/niosh for more information.

You must:

• Provide at least two standby employees outside the IDLH area.

Note: You need only one standby employee **if** the IDLH condition is well characterized, will remain stable **AND** you can show one employee can adequately do **ALL** of the following:

• Monitor employees in the IDLH area
• Implement communication
• Initiate rescue duties.

• Train and equip standby employees to provide effective emergency rescue. Equip them with:

- A pressure-demand SCBA or a pressure-demand air-line respirator with an auxiliary SCBA, for each standby employee

- Appropriate retrieval equipment, when it would help with the effective rescue of the entrant, or an equivalent means of rescue

• Make sure standby employees maintain visual, voice, or signal line communication with employees in the IDLH area

• Make sure that in the event of an emergency:

- Standby employees notify you or your designee before they enter the IDLH area to provide emergency rescue

- You provide necessary assistance when notified.

[Statutory Authority: RCW 49.17.010, 49.17.040, 49.17.050, 49.17.060. WSR 05-01-166, § 296-307-61405, filed 12/21/04, effective 4/2/05.]

WAC 296-307-616 Air quality for self-contained breathing apparatus (SCBA) and air-line respirators.

Your responsibility:

To provide employees who use SCBAs or air-line respirators with an acceptable air supply.

You must:

Make sure breathing air and oxygen meet established specifications

WAC 296-307-61605

Prevent conditions that could create a hazardous breathing air supply

WAC 296-307-61610

Make sure compressors do not create a hazardous breathing air supply

WAC 296-307-61615.

[Statutory Authority: RCW 49.17.010, 49.17.040, 49.17.050, 49.17.060. WSR 05-01-166, § 296-307-616, filed 12/21/04, effective 4/2/05.]

WAC 296-307-61605 Make sure breathing air and oxygen meet established specifications.

You must:

• Make sure that all SCBAs and air-line respirators are provided with safe breathing air and oxygen according to the following:

- Compressed breathing air must meet the following specifications for Grade D air:

■ Oxygen (volume/volume) within 19.5-23.5%

■ Hydrocarbon (condensed): NO MORE than five milligrams per cubic meter of air

■ Carbon **monoxide** (CO): NO MORE than ten parts per million (ppm)

■ Carbon **dioxide** (CO_2): NO MORE than 1,000 ppm

■ No noticeable odor

Reference: See the American National Standards Institute - Compressed Gas Association Commodity Specification for Air (G-7.1.1989) for more information. Contact your local library to access a copy.

You must:

• Make sure the moisture content of the air supplied meets the following:

- Air supplied to respirators from cylinders must **NOT** exceed a dew point of -50°F (or -45.6°C) at 1 atmospheric pressure.

- Compressor supplied air must **NOT** exceed a dew point of 10°F (or 5.56°C) **BELOW** the use temperature at 1 atmospheric pressure.

• Cylinders obtained from a supplier of breathing air must have a certificate of analysis that verifies each cylinder's contents meet Grade D and dew point standards.

• Compressed and liquid oxygen must meet the United States Pharmacopoeia requirements for medical or breathing oxygen.

[Statutory Authority: RCW 49.17.010, 49.17.040, 49.17.050, 49.17.060. WSR 05-01-166, § 296-307-61605, filed 12/21/04, effective 4/2/05.]

WAC 296-307-61610 Prevent conditions that could create a hazardous breathing air supply.

You must:

• Use SCBA and air-line respirators safely:

- Do **NOT** supply compressed oxygen to SCBAs or air-line respirators that previously used compressed air.

Note: Compressed air leaves residues containing hydrocarbons such as oil or grease. Fire or explosion can occur if compressed oxygen makes contact with these residues.

You must:

• Use breathing air couplings on air-line respirators that are **NOT** compatible with couplings for nonrespirable air or other gas systems, for example, utility air used for manufacturing purposes.

• Do **NOT** allow asphyxiating substances to enter breathing air lines; for example, do not flush nitrogen through worksite air lines also used for breathing air.

• Use equipment specifically designed for oxygen service or distribution **IF** oxygen concentrations greater than 23.5% are used.

Note: Respiratory equipment NOT designed for oxygen service or distribution can create fire or explosion hazards in oxygen concentrations higher than 23.5%.

You must:

• Make sure cylinders used to supply breathing air for SCBAs or air-line respirators are tested and maintained as described in the federal Department of Transportation's (DOT) Shipping Container Specification Regulations, Title 49 C.F.R. Parts 173 and 178.

Note:
• Use only cylinders marked (with serial number, cylinder pressure, DOT exemption number, and test dates) according to these DOT regulations
• To find any Code of Federal Regulations (C.F.R.) visit: www.access.gpo.gov.

[Statutory Authority: RCW 49.17.010, 49.17.040, 49.17.050, 49.17.060. WSR 05-01-166, § 296-307-61610, filed 12/21/04, effective 4/2/05.]

WAC 296-307-61615 Make sure compressors do not create a hazardous breathing air supply.

IMPORTANT:

• Ambient-air movers (or pumps) used to supply air to respirators must be used according to the manufacturer's instructions.

• Respirators used with ambient-air movers must be approved by NIOSH to operate within the pressure ranges of the air mover.

You must:

(1) Locate or modify compressor intakes so they will not pick up contaminated air OR exhaust gases such as carbon monoxide from:

• Fuel-powered vehicles

OR

• The internal combustion motor of the compressor

OR

• Other contaminant sources in the area, for example, a ventilation system discharge.

Note: • You may need to reposition or extend the compressor's intake or engine exhaust pipe or outlet, especially if they are located near each other.

• Be aware that exhaust gases may not adequately disperse when the compressor is operated in:

- An enclosed space such as a small room, a corner, or near a wall

OR

- In turbulent wind conditions.

You must:

(2) Equip compressors with suitable air-purifying filters, water traps, and sorbents (such as charcoal beds) and maintain them as follows:

• Periodically change or clean them according to the manufacturer or supplier's instructions

• Keep a tag at the compressor with the following information:

- When the sorbent and filters were last replaced or cleaned

- The date of the most recent changes or cleaning

- The signature of the person authorized by the employer to perform changes or cleaning.

Note: To be sure you are providing the recommended operating pressure for respirators, you may need to install a delivery pressure gauge at the point where the manifold respirator hose is attached.

You must:

(3) Make sure the carbon monoxide (CO) level in breathing air from compressors does **NOT** exceed ten parts per million (ppm).

Note: If you do not have a reliable CO-free area available for locating your compressor intake, consider these examples of methods to prevent CO contamination of the air supply:

• Use of continuous and effective carbon monoxide alarms and filters

• Conduct frequent monitoring of air quality

• Use a CO converter (converts CO to carbon dioxide).

You must:

• Maintain CO levels in oil lubricated compressors by using at least one of the following:

- An effective CO alarm

- An effective high temperature alarm **AND** testing the air supply often enough to see if CO levels exceed ten ppm.

Note: • How often to test depends on a number of considerations, for example:

- Compressor age

- Maintenance history of the compressor

- Stability of CO readings

• If the CO or high temperature alarm cannot be heard by the employee, a flashing light or other effective alternative to an audio alarm needs to be used

• Safeguards, such as alarms, are necessary to prevent CO contamination resulting from compressor overheating

• Any type of oil-lubricated compressor, such as screw or piston types, may produce dangerous levels of CO if overheating occurs

- Old compressors are known to leak oil due to worn parts, increasing the possibility for overheating. Newer compressors may also overheat if maintenance practices are poor. For example, poor maintenance practices may lead to disconnected or incorrectly set alarms, inoperative shut-offs, or an impaired cooling system

• You need to instruct employees to move to a safe area when the alarm sounds AND to stop using respirators.

[Statutory Authority: RCW 49.17.010, 49.17.040, 49.17.050, 49.17.060. WSR 05-01-166, § 296-307-61615, filed 12/21/04, effective 4/2/05.]

WAC 296-307-618 Labeling of air-purifying respirator filters, cartridges, and canisters.

Your responsibility:

To make sure employees, their supervisors, and program administrators can easily check for the correct air-purifying filters, cartridges, and canisters on respirators.

Exemption: This section does **NOT** apply to filtering-facepiece respirators when used voluntarily. See WAC 296-307-598 for voluntary use requirements.

[Statutory Authority: RCW 49.17.010, 49.17.040, 49.17.050, 49.17.060. WSR 05-01-166, § 296-307-618, filed 12/21/04, effective 4/2/05.]

WAC 296-307-61805 Keep labels readable on respirator filters, cartridges, and canisters during use.

You must:

• Make sure the NIOSH certification labeling and color-coding on air-purifying respirator filters, cartridges, and canisters remains readable and intact during use.

[Statutory Authority: RCW 49.17.010, 49.17.040, 49.17.050, 49.17.060. WSR 05-01-166, § 296-307-61805, filed 12/21/04, effective 4/2/05.]

WAC 296-307-620 Required procedures for respiratory protection program.

Your responsibility:

To use the procedures and questionnaire provided in this section when implementing your respiratory protection program.

You must:

Use this medical questionnaire for medical evaluations

WAC 296-307-62005

Follow these fit-testing procedures for tight-fitting respirators

WAC 296-307-62010

Follow procedures established for cleaning and disinfecting respirators

WAC 296-307-62015

Follow procedures established for seal checking respirators

WAC 296-307-62020.

[Statutory Authority: RCW 49.17.010, 49.17.040, 49.17.050, 49.17.060. WSR 05-01-166, § 296-307-620, filed 12/21/04, effective 4/2/05.]

WAC 296-307-62005 Use this medical questionnaire for medical evaluations.

You must:

• Use the medical questionnaire in Table 10 when conducting medical evaluations.

Note:
• You may use a physical exam instead of this questionnaire if the exam covers the same information as the questionnaire.
• You may use online questionnaires if the questions are the same and the requirements in WAC 296-307-604 of this part are met.
• You may choose to send the questionnaire to the LCHP ahead of time, giving time to review it and add any necessary questions.
• The LHCP determines what questions to add to the questionnaire, if any; however, questions in Parts 1-3 may not be deleted or substantially altered.

Table 10

WISHA Medical Evaluation Questionnaire
Employer instructions:
• You may use online questionnaires if the requirements in WAC 296-307-60405 are met.
• You must tell your employee how to deliver or send the completed questionnaire to the health care provider you have selected.
• You must NOT review employees' questionnaires.

WISHA Medical Evaluation Questionnaire
Health care provider's instructions:
• Review the information in this questionnaire and any additional information provided to you by the employer.
• You may add questions to this questionnaire at your discretion; HOWEVER, questions in Parts 1-3 may not be deleted or substantially altered.
• Follow-up evaluation is required for any positive response to questions 1-8 in Part 2, or questions 1-6 in Part 3. This might include: Phone consultations to evaluate positive responses, medical tests, and diagnostic procedures.
• When your evaluation is complete, send a copy of your written recommendation to the employer AND employee.
Employee information and instructions:
• Your employer must allow you to answer this questionnaire during normal working hours, or at a time and place that's convenient to you.
• Your employer or supervisor must not look at or review your answers at any time.

Part 1 - Employee Background Information

ALL employees must complete this part

Please print

1. Today's date: _____

2. Your name: _____

3. Your age (to nearest year): ____

4. Sex (circle one): Male / Female

5. Your height: ___ ft. ___ in.

6. Your weight: ____ lbs.

7. Your job title: _____

8. A phone number where you can be reached by the health care professional who reviews this questionnaire (include Area Code): _____

9. The best time to call you at this number: _____

10. Has your employer told you how to contact the health care professional who will review this questionnaire? Yes / No

11. Check the type of respirator(s) you will be using:

a. ____ N, R, or P filtering-facepiece respirator (for example, a dust mask, OR an N95 filtering-facepiece respirator).

b. Check all that apply.

□ Half mask □ Full facepiece mask □ Helmet hood □ Escape

□ Nonpowered cartridge or canister □ Powered air-purifying cartridge respirator (PAPR)

□ Supplied-air or Air-line

Self-contained breathing apparatus (SCBA): □ Demand or □ Pressure demand

Other: _____

12. Have you previously worn a respirator? Yes / No

If "yes," describe what type(s): _____

Part 2 - General Health Information

ALL employees must complete this part

Please circle "Yes" or "No"

1. Do you *currently* smoke tobacco, or have you smoked tobacco in the last month?	Yes	/	No
2. Have you *ever had* any of the following conditions?			
a. Seizures (fits):	Yes	/	No
b. Diabetes (sugar disease):	Yes	/	No
c. Allergic reactions that interfere with your breathing:	Yes	/	No
d. Claustrophobia (fear of closed-in places):	Yes	/	No
e. Trouble smelling odors:	Yes	/	No
3. Have you *ever had* any of the following pulmonary or lung problems?			
a. Asbestosis:	Yes	/	No
b. Asthma:	Yes	/	No
c. Chronic bronchitis:	Yes	/	No
d. Emphysema:	Yes	/	No
e. Pneumonia:	Yes	/	No
f. Tuberculosis:	Yes	/	No
g. Silicosis:	Yes	/	No
h. Pneumothorax (collapsed lung):	Yes	/	No
i. Lung cancer:	Yes	/	No
j. Broken ribs:	Yes	/	No
k. Any chest injuries or surgeries:	Yes	/	No
l. Any other lung problem that you have been told about:	Yes	/	No
4. Do you *currently* have any of the following symptoms of pulmonary or lung illness?			
a. Shortness of breath:	Yes	/	No
b. Shortness of breath when walking fast on level ground or walking up a slight hill or incline:	Yes	/	No
c. Shortness of breath when walking with other people at an ordinary pace on level ground:	Yes	/	No
d. Have to stop for breath when walking at your own pace on level ground:	Yes	/	No
e. Shortness of breath when washing or dressing yourself:	Yes	/	No
f. Shortness of breath that interferes with your job:	Yes	/	No
g. Coughing that produces phlegm (thick sputum):	Yes	/	No
h. Coughing that wakes you early in the morning:	Yes	/	No
i. Coughing that occurs mostly when you are lying down:	Yes	/	No
j. Coughing up blood in the last month:	Yes	/	No
k. Wheezing:	Yes	/	No
l. Wheezing that interferes with your job:	Yes	/	No
m. Chest pain when you breathe deeply:	Yes	/	No
n. Any other symptoms that you think may be related to lung problems:	Yes	/	No
5. Have you *ever had* any of the following cardiovascular or heart problems?	Yes	/	No
a. Heart attack:	Yes	/	No
b. Stroke:	Yes	/	No
c. Angina:	Yes	/	No
d. Heart failure:	Yes	/	No
e. Swelling in your legs or feet (not caused by walking):	Yes	/	No

f. Heart arrhythmia (heart beating irregularly):	Yes	/	No
g. High blood pressure:	Yes	/	No
h. Any other heart problem that you have been told about:	Yes	/	No
6. Have you *ever had* any of the following cardiovascular or heart symptoms?			
a. Frequent pain or tightness in your chest:	Yes	/	No
b. Pain or tightness in your chest during physical activity:	Yes	/	No
c. Pain or tightness in your chest that interferes with your job:	Yes	/	No
d. In the past 2 years, have you noticed your heart skipping or missing a beat:	Yes	/	No
e. Heartburn or indigestion that's not related to eating:	Yes	/	No
f. Any other symptoms that you think may be related to heart or circulation problems:	Yes	/	No
7. Do you *currently* take medication for any of the following problems?	Yes	/	No
a. Breathing or lung problems:	Yes	/	No
b. Heart trouble:	Yes	/	No
c. Blood pressure:	Yes	/	No
d. Seizures (fits):	Yes	/	No
8. If you have used a respirator, have you *ever had* any of the following problems? (If you have never used a respirator, check the following space and go to question 9): ____			
a. Eye irritation:	Yes	/	No
b. Skin allergies or rashes:	Yes	/	No
c. Anxiety:	Yes	/	No
d. General weakness or fatigue:	Yes	/	No
e. Any other problem that interferes with your use of a respirator?	Yes	/	No
9. Would you like to talk to the health care professional who will review this questionnaire about your answers?	Yes	/	No
Part 3 - Additional Questions for Users of Full-Facepiece Respirators or SCBAs			
Please circle "Yes" or "No"			
1. Have you *ever lost* vision in either eye (temporarily or permanently)?	Yes	/	No
2. Do you *currently* have any of these vision problems?			
a. Need to wear contact lenses:	Yes	/	No
b. Need to wear glasses:	Yes	/	No
c. Color blindness:	Yes	/	No
d. Any other eye or vision problem:	Yes	/	No
3. Have you *ever had* an injury to your ears, including a broken ear drum?	Yes	/	No
4. Do you *currently* have any of these hearing problems?			
a. Difficulty hearing:	Yes	/	No
b. Need to wear a hearing aid:	Yes	/	No
c. Any other hearing or ear problem:	Yes	/	No
5. Have you *ever had* a back injury?	Yes	/	No
6. Do you *currently* have any of the following musculoskeletal problems?			
a. Weakness in any of your arms, hands, legs, or feet:	Yes	/	No
b. Back pain:	Yes	/	No
c. Difficulty fully moving your arms and legs:	Yes	/	No
d. Pain or stiffness when you lean forward or backward at the waist:	Yes	/	No
e. Difficulty fully moving your head up or down:	Yes	/	No
f. Difficulty fully moving your head side to side:	Yes	/	No

g. Difficulty bending at your knees:	Yes	/	No
h. Difficulty squatting to the ground:	Yes	/	No
i. Climbing a flight of stairs or a ladder carrying more than 25 lbs:	Yes	/	No
j. Any other muscle or skeletal problem that interferes with using a respirator:	Yes	/	No

Part 4 - Discretionary Questions

Complete questions in this part ONLY IF your employer's health care provider says they are necessary

1. In your present job, are you working at high altitudes (over 5,000 feet) or in a place that has lower than normal amounts of oxygen?	Yes	/	No
If "yes," do you have feelings of dizziness, shortness of breath, pounding in your chest, or other symptoms when you are working under these conditions:	Yes	/	No
2. Have you ever been exposed (at work or home) to hazardous solvents, hazardous airborne chemicals (such as gases, fumes, or dust), OR have you come into skin contact with hazardous chemicals?	Yes	/	No
If "yes," name the chemicals, if you know them: _____			
3. Have you ever worked with any of the materials, or under any of the conditions, listed below:			
a. Asbestos?	Yes	/	No
b. Silica (for example, in sandblasting)?	Yes	/	No
c. Tungsten/cobalt (for example, grinding or welding this material)?	Yes	/	No
d. Beryllium?	Yes	/	No
e. Aluminum?	Yes	/	No
f. Coal (for example, mining)?	Yes	/	No
g. Iron?	Yes	/	No
h. Tin?	Yes	/	No
i. Dusty environments?	Yes	/	No
j. Any other hazardous exposures?	Yes	/	No
If "yes," describe these exposures: _____			
4. List any second jobs or side businesses you have: _____			
5. List your previous occupations: _____			
6. List your current and previous hobbies: _____			
7. Have you been in the military services?	Yes	/	No
If "yes," were you exposed to biological or chemical agents (either in training or combat)?	Yes	/	No
8. Have you ever worked on a HAZMAT team?	Yes	/	No
9. Other than medications for breathing and lung problems, heart trouble, blood pressure, and seizures mentioned earlier in this questionnaire, are you taking any other medications for any reason (including over-the-counter medications)?	Yes	/	No
If "yes," name the medications if you know them: _____			
10. Will you be using any of the following items with your respirator(s)?			
a. HEPA filters:	Yes	/	No
b. Canisters (for example, gas masks):	Yes	/	No
c. Cartridges:	Yes	/	No
11. How often are you expected to use the respirator(s)?			
a. Escape-only (no rescue):	Yes	/	No
b. Emergency rescue only:	Yes	/	No
c. Less than 5 hours *per week*:	Yes	/	No
d. Less than 2 hours *per day*:	Yes	/	No
e. 2 to 4 hours per day:	Yes	/	No
f. Over 4 hours per day:			

12. During the period you are using the respirator(s), is your work effort:

a. *Light* (less than 200 kcal per hour): Yes / No

If "yes," how long does this period last during the average shift: ____ hrs. ____ mins.

Examples of a light work effort are sitting while writing, typing, drafting, or performing light assembly work; or standing while operating a drill press (1-3 lbs.) or controlling machines.

b. *Moderate* (200 to 350 kcal per hour): Yes / No

If "yes," how long does this period last during the average shift: ____ hrs. ____ mins.

Examples of moderate work effort are sitting while nailing or filing; driving a truck or bus in urban traffic; standing while drilling, nailing, performing assembly work, or transferring a moderate load (about 35 lbs.) at trunk level; walking on a level surface about 2 mph or down a 5-degree grade about 3 mph; or pushing a wheelbarrow with a heavy load (about 100 lbs.) on a level surface.

c. *Heavy* (above 350 kcal per hour): Yes / No

If "yes," how long does this period last during the average shift: ____ hrs. ____ mins.

Examples of heavy work are lifting a heavy load (about 50 lbs.) from the floor to your waist or shoulder; working on a loading dock; shoveling; standing while bricklaying or chipping castings; walking up an 8-degree grade about 2 mph; climbing stairs with a heavy load (about 50 lbs.).

13. Will you be wearing protective clothing and/or equipment (other than the respirator) when you are using your respirator? Yes / No

If "yes," describe this protective clothing and/or equipment: _____

14. Will you be working under hot conditions (temperature exceeding 77°F): Yes / No

15. Will you be working under humid conditions: Yes / No

16. Describe the work you will be doing while using your respirator(s): _____

17. Describe any special or hazardous conditions you might encounter when you are using your respirator(s) (for example, confined spaces, life-threatening gases): _____

18. Provide the following information, if you know it, for each toxic substance that you will be exposed to when you are using your respirator(s):

Name of the first toxic substance: _____

Estimated maximum exposure level per shift: _____

Duration of exposure per shift: _____

Name of the second toxic substance: _____

Estimated maximum exposure level per shift: _____

Duration of exposure per shift: _____

Name of the third toxic substance: _____

Estimated maximum exposure level per shift: _____

Duration of exposure per shift: _____

The name of any other toxic substances that you will be exposed to while using your respirator: _____

19. Describe any special responsibilities you will have while using your respirator(s) that may affect the safety and well-being of others (for example, rescue, security). _____

[Statutory Authority: RCW 49.17.010, 49.17.040, 49.17.050, 49.17.060. WSR 05-01-166, § 296-307-62005, filed 12/21/04, effective 4/2/05.]

WAC 296-307-62010 Follow these fit-testing procedures for tight-fitting respirators.

IMPORTANT:

• This section contains procedural requirements that apply during actual fit testing.

• See WAC 296-307-606 of this part for fit-testing requirements that apply to your overall program.

Exemptions: This section does **NOT** apply to employees who:

• Voluntarily use respirators

OR

• Are required to use mouthpiece respirators.

You must:

• Conduct fit testing according to all of the following:

- Follow the procedure in Table 11 to choose a respirator for fit testing:

■ Prior to conducting fit tests

AND

■ Any time your employee must select a different respirator such as when a previously selected respirator fails a test

- Select and follow at least one of the following fit test procedures:

■ Qualitative fit-test procedures:

♦ Isoamyl acetate vapor (IAA, banana oil) in Table 12

♦ Saccharine aerosol in Table 13

♦ Bitrex™ aerosol in Table 14

♦ Irritant smoke in Table 15

■ Quantitative fit-test procedures:

♦ Ambient aerosol condensation nuclei counter such as the Portacount™, in Table 16

♦ Controlled negative pressure (CNP) such as the Fit-Tester 3000™, in Table 17

♦ Generated aerosol in Table 18

- Make sure employees perform the appropriate fit-test exercises listed in Table 19.

- Clean and maintain equipment according to the manufacturer's instructions.

- Make sure during fit testing employees wear any safety equipment that could:

■ Interfere with respirator fit

AND

■ Be worn in the workplace. For example, chemical splash goggles.

- Check, prior to fit testing, for conditions that may interfere with the respirator seal or valve functions. If you find such conditions, do **NOT** conduct fit testing for that individual.

Note: Examples of conditions that may interfere with the respirator seal or valve functions include:

• Moustache, stubble, sideburns, bangs, hairline, and other types of facial hair in areas where the respirator facepiece seals or that interfere with valve function

• Temple bars of corrective eyewear or headgear that extend through the face seal area.

Table 11

Procedure for Choosing a Respirator for Fit Testing
1. **Inform** the employee: • To choose the most comfortable respirator that provides an adequate fit • That each respirator sample represents a different size and, if more than one model is supplied, a different shape • That if fitted and used properly, the respirator chosen will provide adequate protection 2. **Provide** a mirror and show the employee how to: • Put on the respirator • Position the respirator on the face • Set strap tension. **Note:** This instruction does NOT take the place of the employee's formal training since it is only a review.
3. **Review** with the employee how to check for a comfortable fit around the nose, cheeks and other areas on the face. • Tell the employee the respirator should be comfortable while talking or wearing eye protection. 4. **Have the employee** hold each facepiece against the face, taking enough time to compare the fit of each. The employee can then either: • Reject any facepiece that clearly does not feel comfortable or fit adequately **OR** • Choose which facepiece is most acceptable and which is less acceptable, if any. **Note:** • Supply as many respirator models and sizes as needed to make sure the employee finds a respirator that's acceptable and fits correctly • To save time later, during this step note the more acceptable facepieces in case the one chosen fails the fit test or proves unacceptable later. 5. **Have the employee wear** the most acceptable respirator for **AT LEAST** 5 minutes to evaluate comfort and fit. Do **ALL** of the following during this time: • Ask the employee to observe and comment about the comfort and fit: - Around the nose, cheeks, and other areas on the face - When talking or wearing eye protection • Have the employee put on the respirator and adjust the straps until they show proficiency • Evaluate the respirator's general fit by checking: - Proper chin placement - Properly tightened straps (do **NOT** over tighten) - Acceptable fit across the nose bridge - Respirator size; it must span the distance from nose to chin - To see if the respirator stays in position • Have the employee complete a successful seal check as specified in WAC 296-307-62020 of this chapter - Prior to the seal check they must settle the respirator on their face by taking a few slow deep breaths **WHILE SLOWLY:** ■ Moving their head from side-to-side **AND** ■ Up and down. 6. **If the employee finds the respirator unacceptable,** allow the employee to select another one and return to Step 5. Otherwise, proceed to Step 7. 7. **Before starting the fit test,** you must: • Describe the fit test including screening procedures, employee responsibilities, and test exercises

Procedure for Choosing a Respirator for Fit Testing
AND • Make sure the employee wears the respirator **AT LEAST** five minutes.

Table 12

Isoamyl Acetate (Banana Oil) Vapor Test Procedure
Important: • This is a qualitative fit-test (QLFT) procedure • The success of this test depends on preserving the employee's odor sensitivity to isoamyl acetate (IAA) vapor - Vapor accumulations in ambient air can decrease odor sensitivity. To prevent this: ■ Prepare **ALL** solutions in a location separate from screening and test areas ■ Conduct screening and tests in separate well-ventilated rooms. For example, use an exhaust fan or laboratory hood to prevent IAA vapor from accumulating in the room air - Always use odor-free water, for example, distilled or spring water that's 25°C (77°F). • Isoamyl acetate is also known as isopentyl acetate.
Screening Preparations
Important: Odor threshold screening determines if the employee can detect weak concentrations of IAA vapor. 1. Choose an appropriate location to conduct screening. • Conduct screening and tests in separate well-ventilated rooms. 2. Prepare a stock solution **AT LEAST** weekly as follows: • Add one milliliter (ml) of pure IAA to 800 ml of odor-free water in a one-liter glass jar with a metal lid using a measuring dropper or pipette • Seal the jar with the lid and shake it for 30 seconds • Clean the dropper or pipette. 3. Prepare the odor test solution daily as follows: • Add 0.4 ml from the stock solution to 500 ml of water in a one liter glass jar with a metal lid using a clean pipette or dropper • Seal the jar with the lid and shake it for 30 seconds • Let this solution stand for 2-3 minutes so the IAA concentration above the liquid reaches equilibrium • Label this jar so you know the contents but the employee cannot know its contents, for example, "1." **Note:** To maintain the integrity of the test, use labels that peel off easily **AND** periodically switch the labels. 4. Prepare a "test blank" solution as follows:

Isoamyl Acetate (Banana Oil) Vapor Test Procedure
• Add 500 ml of odor-free water to a one liter glass jar with a metal lid • Seal the jar • Label the jar so you know the contents but the employee cannot know its contents. 5. Type or neatly print the following instructions on a card and place it on the table in front of the two test jars: "*The purpose of this test is to find out if you can smell banana oil at a low concentration. While both jars contain water, one* ***ALSO*** *contains a small amount of banana oil.* *Make sure the lid is secure then pick up a jar and shake it for two seconds. Open the jar and sniff at the opening. Repeat this for the second jar.* *Tell the individual conducting the fit test which jar contains banana oil.*"
Test Preparations
6. Choose an appropriate location to conduct fit testing. • Conduct screening and tests in separate well-ventilated rooms. 7. Assemble the fit test enclosure in the room. • Invert a clear 55-gallon drum liner over a circular 2-foot diameter frame made of plywood or other light-weight rigid material OR construct a similar enclosure using plastic sheeting • Hang the frame with the plastic covering so the top of the enclosure is about six inches above the employee's head • Attach a small hook inside top center of the enclosure • Tape a copy of the test exercises (see Table 28) to the inside of the test enclosure where the employee can read it. 8. Have organic vapor cartridges or equivalent on hand for each employee's chosen respirator. 9. Have ready a 6 x 5-inch piece of paper towel or other porous absorbent single-ply material **AND** 0.75 ml of pure IAA. Do NOT apply IAA yet. **Note:** As an alternative to using the paper towel, you may use an IAA test swab OR ampoule if it has been demonstrated to generate an equivalent test concentration.
Screening
10. Have the employee, while **NOT** wearing a respirator, follow the instructions on the card provided. • If the employee correctly identifies the jar containing IAA, proceed to conduct testing (Step 11) • If the employee is **NOT** able to correctly identify the jar containing IAA, you must **STOP** and use a different fit test protocol.

Isoamyl Acetate (Banana Oil) Vapor Test Procedure

Test

11. **BEFORE** entering the fit test room, have the employee attach cartridges, put on, properly adjust, and seal check the respirator. Have the employee enter the test enclosure.

12. Wet the paper towel with 0.75 ml of **pure** IAA **AND** fold it in half.

13. Pass the paper towel to the employee inside the enclosure **AND** instruct the employee to hang it on the hook at the top of the enclosure.

14. Wait two minutes for the IAA vapor to fill the enclosure.

- While waiting, explain the fit test, including the purpose of the test exercises, the importance of cooperation, and that you must be informed if a banana-like odor is detected during the test
- You may also demonstrate the test exercises.

15. Have the employee perform the appropriate fit-test exercises in Table 19.

- If the employee does **NOT** detect IAA while performing test exercises, the fit test has been **PASSED.** Proceed as follows:
  - **BEFORE** leaving the enclosure, have the employee break the respirator seal and inhale. If they **detect** IAA, the test is valid
  - When exiting the employee must remove the paper towel and give it to the individual conducting the fit test. This prevents IAA vapor from building up in the enclosure during subsequent tests
  - The individual conducting the fit test must keep used paper towels in a self-sealing plastic bag to prevent area contamination
- If the employee detects IAA during any test exercise, the fit test has **FAILED. STOP** and have the employee do the following:
  - Quickly return to the selection room to remove the respirator. This avoids decreasing the employee's odor sensitivity
  - Select another respirator
  - Repeat screening and testing
    - At this stage, if the employee fails the screening part of this procedure, the employee can repeat it **AFTER** waiting at least five minutes for odor sensitivity to return.

Table 13

Saccharin Aerosol Test Procedure

Screening Preparations

Important:

- This is a qualitative fit-test (QLFT) procedure

Saccharin Aerosol Test Procedure

- Taste threshold screening determines whether the employee being tested can detect the taste of saccharin
  - The employee must **NOT** eat, smoke, chew gum or drink anything but plain water for at least fifteen minutes **BEFORE** the fit test. Sweet foods or drink consumed before the test may make the employee unable to detect saccharin during screening
  - Nebulizers must be thoroughly rinsed in water and shaken dry:
    - Each morning and afternoon

    OR

    - At least every four hours.
- You may use commercially prepared solutions if they meet the requirements in this procedure.

1. Obtain a test enclosure (hood) that meets the following specifications:

- Twelve inches in diameter by fourteen inches tall
- A clear front portion
- Enough space inside to allow free movement of the head when a respirator is worn
- A 3/4 inch (or 1.9 centimeter) hole to accommodate the nebulizer nozzle. The hole must line up in front of the wearer's nose and mouth.

Note:
- An enclosure similar to the 3M hood assembly, parts #FT 14 and #FT 15 combined, meets these specifications
- This enclosure can also be used for testing.

2. Obtain and assemble two clean DeVilbiss Model 40 Inhalation Medication Nebulizers OR equivalent.

3. Prepare the screening solution as follows:

- Dissolve 83.0 milligrams of sodium saccharin USP in 100 ml of warm distilled water

OR

- **IF** you have already prepared the fit-test solution, you can make the screening solution by adding 1 ml of this solution to 100 ml of distilled water.

4. Add about 1 ml of the screening solution to one of the nebulizers.

- Mark this nebulizer to distinguish it from the one to be used for fit testing.

Test Preparations

5. Prepare the fit-test solution as follows:

- Add 83.0 grams of sodium saccharin to 100 ml of warm water.

6. Add about 1 ml of the test solution to the second nebulizer.

- Mark this nebulizer to distinguish it from the one used for screening

7. Have particulate filters ready for the employee's chosen respirator or have filtering-facepiece respirators ready.

Saccharin Aerosol Test Procedure

Screening

8. Have the employee, while NOT wearing a respirator, put on the test enclosure.

9. Instruct the employee to:

- Breath through a slightly open mouth with tongue extended during screening **AND** testing
- Immediately report when a sweet taste is detected.

10. Insert the nebulizer into the front hole of the test enclosure **AND** administer saccharin as follows:

- Direct the nozzle away from the employee's nose and mouth
- Complete 10 squeezes in rapid succession
- Each time firmly squeeze the bulb so it collapses completely, then release and allow it to fully expand.

11. Ask the employee if a sweet taste is detected.

- If **YES,** screening is completed. Proceed to conduct testing, Step 14, **AFTER** you:
  - Ask the employee to remember the taste for reference during the fit test
  - Note the employee's taste threshold as "10" regardless of the number of squeezes actually completed
- If **NO,** screening must continue. Proceed to Step 12.

12. Repeat with 10 more squeezes. Then follow Step 11 again; **EXCEPT** this time note the employee's taste threshold as "20" **IF** a sweet taste is reported.

- If a sweet taste is still **NOT** detected, repeat with 10 more squeezes and follow Step 11 one last time; **EXCEPT** this time note "30" for the taste threshold IF a sweet taste is reported.

13. If **NO** sweet taste is reported after 30 squeezes, you must **STOP** and choose a different fit-test protocol for the employee.

Test

Important!

- Periodically check nebulizers to make sure they do not clog during use. A test is **NOT** valid if the nebulizer is clogged at the end of the test.

14. Have the employee attach particulate filters, put on, properly adjust, and seal check the respirator. Have the employee put on the test enclosure (hood).

15. Instruct the employee to immediately report if a sweet taste is detected.

16. Insert the nebulizer into the front hole of the test enclosure **AND** administer the same number of squeezes, either 10, 20, or 30, as noted during screening.

17. Have the employee perform the appropriate fit-test exercises as described in Table 19. During this step:

Saccharin Aerosol Test Procedure

- Replenish the aerosol in the hood **EVERY** 30 seconds using 1/2 the number of squeezes used in Step 16, either 5, 10, or 15
- The employee must report if a sweet taste is detected:
  - If **NO** saccharin is tasted, the test has been **PASSED**
    - ■ If saccharin is tasted the test has **FAILED,** have the employee select another respirator

      AND
    - ■ Repeat screening and testing.

Table 14

Bitrex™ Aerosol Test Procedure

Important!

- This is a qualitative fit-test (QLFT) procedure
- Bitrex™ (denatonium benzoate) is routinely used as a taste aversion agent in household liquids that children shouldn't drink and is endorsed by the American Medical Association, the National Safety Council, and the American Association of Poison Control Centers
- The employee must **NOT** eat, smoke, chew gum or drink anything but plain water for at least fifteen minutes **BEFORE** the fit test.

Screening Preparations

Important!

- Taste threshold screening determines whether the employee being tested can detect the taste of Bitrex™
- Nebulizers must be thoroughly rinsed in water and shaken dry:
  - Each morning and afternoon

    OR
  - At least every four hours.
- You may use commercially prepared solutions if they meet the requirements in this procedure.

1. Obtain a test enclosure that meets the following specifications:

- Twelve inches in diameter by fourteen inches tall
- A clear front portion
- Enough space inside the front to allow free movement of the head when a respirator is worn
- 3/4 inch (or 1.9 centimeter) hole to accommodate the nebulizer nozzle. The hole must line up in front of the wearer's nose and mouth.

Note:
- An enclosure similar to the 3M hood assembly, parts #FT 14 and #FT 15 combined, meets these specifications
- This enclosure can also be used for testing.

Bitrex™ Aerosol Test Procedure

2. Obtain and assemble two clean DeVilbiss Model 40 Inhalation Medication Nebulizers OR equivalent:

3. Prepare the screening solution as follows:

- Make up a 5% salt solution by dissolving 5.0 grams of salt (sodium chloride) into 100 ml of distilled water
- Dissolve 13.5 milligrams of Bitrex™ in the salt solution.

4. Add about 1 ml of the screening solution to one of the nebulizers.

- Mark this nebulizer to distinguish it from the one to be used for fit testing.

Test Preparations

5. Prepare the fit test solution.

- Dissolve 10.0 grams of salt (sodium chloride) into 200 ml of distilled water
- Add 337.5 milligrams of Bitrex™ to the warmed salt solution.

6. Add about 1 ml of the test solution to the second nebulizer.

- Mark this nebulizer to distinguish it from the one used for screening.

7. Have particulate filters ready for the employee's chosen respirator or have filtering-facepiece respirators ready.

Screening

Important:
The employee must **NOT** eat, smoke, chew gum or drink anything but plain water for at least fifteen minutes **BEFORE** the screening and test

8. Have the employee, while **NOT** wearing a respirator, put on the test enclosure.

9. Instruct the employee to:

- Breathe through a slightly opened mouth with tongue extended during screening **AND** testing
- Immediately report when a bitter taste is detected.

10. Insert the nebulizer into the front hole of the test enclosure **AND** administer Bitrex™ as follows:

- Direct the nozzle away from the employee's nose and mouth
- Complete 10 squeezes in rapid succession
- Each time firmly squeeze the bulb so it collapses completely, then release and allow it to fully expand.

11. Ask the employee whether a bitter taste is detected.

- If **YES,** screening is completed. Proceed to conduct testing, Step 14, **AFTER** you:
  - Ask the employee to remember the taste for reference during the fit test
  - Note the employee's taste threshold as "10," regardless of the number of squeezes actually completed

Bitrex™ Aerosol Test Procedure

- If **NO,** screening must continue. Proceed to Step 12.

12. Repeat with 10 more squeezes. Then follow Step 11 again; **EXCEPT** this time note the employee's taste threshold as "20" **IF** a bitter taste is reported.

- If a bitter taste is still **NOT** detected repeat with 10 more squeezes and follow Step 11 one last time; **EXCEPT** this time note "30" for the taste threshold IF a bitter taste is reported.

13. If **NO** bitter taste is reported after 30 squeezes, you must **STOP** and choose a different fit-test protocol for the employee.

Test

14. Have the employee attach particulate filters, put on, properly adjust, and seal check the respirator. Have the employee put on the test enclosure.

15. Instruct the employee to:

- Breathe through a slightly opened mouth with tongue extended during screening **AND** testing
- Immediately report when a bitter taste is detected.

16. Insert the nebulizer into the front hole of the test enclosure **AND** administer the same number of squeezes, either 10, 20, or 30, as noted during screening.

17. Have the employee perform the appropriate fit-test exercises as described in Table 19. During this step:

- Replenish the aerosol in the hood **EVERY** 30 seconds using 1/2 the number of squeezes used in Step 16, either 5, 10, or 15
- The employee must report if a bitter taste is detected:
  - If **NO** Bitrex™ is tasted, the test has been **PASSED**
  - If Bitrex™ is tasted the test has **FAILED.** Have the employee:
    - ■ Select another respirator

    AND

    - ■ Repeat all screening and testing steps.

Table 15

Irritant Smoke (Stannic Chloride) Test Procedure

Important:

- **DO NOT USE A TEST ENCLOSURE OR HOOD FOR THIS FIT TEST!**
- This is a qualitative fit-test (QLFT) procedure
- During this test an employee is exposed to irritating smoke containing hydrochloric acid produced by a stannic chloride ventilation smoke tube to detect leakage. The smoke will irritate eyes, lungs, and nasal passages

Irritant Smoke (Stannic Chloride) Test Procedure

- Employee sensitivity varies, and certain employees may respond more intensely than others exposed to irritant smoke. The individual conducting the fit test must take precautions to minimize the employees' exposure to irritant smoke
- Conduct fit testing in an area with adequate ventilation to prevent exposure of the individual conducting the fit test and build-up of irritant smoke in the ambient air.

Screening AND Test Preparations

Important:

Sensitivity screening is necessary to determine whether the employee can detect a weak concentration of irritant smoke **AND** whether any gross facepiece leakage is detected.

1. Obtain only stannic chloride (ventilation) smoke tubes, **AND** an aspirator squeeze bulb **OR** use a low-flow air pump set to deliver 200 milliliters of air flow per minute.

2. Equip the employee's chosen respirator with P100 series filters if a negative pressure air-purifying respirator will be tested. If a powered air-purifying respirator (PAPR) will be tested equip the respirator with high-efficiency particulate air (HEPA) filters.

Screening

Important!

When performing sensitivity screening checks use only the **MINIMUM** amount of smoke necessary to elicit a response from the employee.

3. Advise the employee that the smoke can be irritating to eyes, lungs, and nasal passages **AND** instruct the employee to keep eyes closed while exposed.

4. Break both ends of the ventilation smoke tube **AND** fit a short piece of plastic tubing, for example, two-to-six inches of tygon tubing, over one end to prevent exposure to the sharp end of the tube. Connect the other end to an aspirator bulb or a low-flow air pump set to deliver a flow of 200 ml per minute.

5. While the employee is **NOT** wearing a respirator, have the employee smell a weak concentration of irritant smoke to become familiar with its irritating properties.

- Carefully direct a small amount of irritant smoke toward the employee.

Test

Test 6. Have the employee attach respirator filters, put on, adjust, and seal check the respirator without assistance. The employee must be proficient at these tasks.

7. Remind the employee to keep eyes closed during testing.

8. Direct a stream of irritant smoke toward the respirator's face seal area as follows:

- Begin at least 12 inches from the facepiece **AND** move the smoke around the whole perimeter of the mask

Irritant Smoke (Stannic Chloride) Test Procedure

- Gradually make two more passes around the perimeter of the facepiece, moving to within 6 inches of the respirator
- **STOP** at any time the employee detects smoke in the facepiece. If this occurs a different respirator will need to be chosen and tested, beginning with sensitivity screening.

9. Have the employee perform appropriate fit-test exercises in Table 19 **IF** the employee has **NOT** had an involuntary response such as evidence of coughing, flinching, or other response, **OR** detected smoke in the facepiece.

- Continue to direct smoke from a distance of 6 inches around the facepiece perimeter
  - If smoke is detected at any time the test has **FAILED.** A different respirator must be chosen and tested, starting with sensitivity screening
  - If **NO** smoke is detected proceed to Step 10.

10. Have the employee remove the respirator **AND** perform another sensitivity screening check as follows:

- Continue to use the smoke tube used for fit testing
- Carefully direct a **SMALL** amount of irritant smoke toward the employee
  - The test has been **PASSED IF** the employee responds to the smoke
  - The fit test is **VOIDED IF** the employee does **NOT** respond to the smoke.

Table 16

Ambient Aerosol Condensation Nuclei Counter (Portacount™) Test Procedure

Important:

- This is a quantitative (QNFT) fit-test procedure
- This method uses a particle counting instrument that measures and compares the particle concentration both inside and outside the respirator facepiece while the employee performs a series of test exercises
- Particles in the ambient air are used as the test aerosol.

Test Preparations

1. Obtain a test instrument such as a Portacount™.

2. Have probed respirators available for each respirator model and size the employer uses, **OR** have a sampling adapter available if the employee's actual or chosen respirator will be tested.

Note:

- A probed respirator has a special fitting installed on the facepiece designed to connect with the end of the test instrument's plastic sampling tube so that air samples can be taken inside the facepiece. Probed respirators can be obtained from the respirator manufacturer, or distributor, **AND** can only be used for fit-testing purposes

Ambient Aerosol Condensation Nuclei Counter (Portacount™) Test Procedure

- Contact TSI Inc., **OR** the respirator's manufacturer to obtain probed respirators or facepiece sampling adapters.

3. Follow the test instrument manufacturer's instructions for test preparation, including particle, zero, and system checks. Make sure the instrument's pass **OR** fail criterion is programmed to the following **MINIMUM** performance levels:

- For half-facepiece respirators, an overall minimum fit factor of 100 as a passing level
- For full-facepiece respirators, an overall minimum fit factor of 500 as a passing level

4. Have high-efficiency particulate air (HEPA) filters, **OR** other respirator filters available that are capable of preventing significant penetration by particles generated by the test instrument such as, P100 or N95 series filters.

- If you'll use a sampling adapter instead of probed respirators be sure to have the correct type for the respirators chosen.

Test

5. Properly attach the sampling line to the facepiece probe or sampling adapter.

6. Have the employee attach respirator filters, put on, properly adjust, and wear the respirator five minutes **BEFORE** the fit test. During this time you and the employee must evaluate the respirator's general fit by checking:

- Proper chin placement
- Properly tightened straps (do **NOT** over tighten)
- Acceptable fit across the nose bridge
- Respirator size. It must span the distance from nose to chin
- To see if the respirator stays in position.

Note:
Wearing the respirator for five minutes permits the employee to make certain the respirator is comfortable **AND** allows for purging of ambient particles trapped inside the facepiece.

7. Have the employee perform a seal check. Make sure the sampling line is crimped to avoid leakage during the seal check. If **NO** leakage is detected, proceed to Step 8. If leakage is detected:

- Determine the cause

AND

- If leakage is due to a poorly fitting facepiece, have the employee:
  - Choose another respirator size or model

  AND

  - Start again at Step 6.

8. Start the fit test cycle.

Ambient Aerosol Condensation Nuclei Counter (Portacount™) Test Procedure

- Follow the manufacturer's instructions for operating the test instrument
- Have the employee perform the appropriate fit-test exercises in Table 19
  - The test instrument will automatically stop and calculate the overall fit factor. Use this result to determine whether or not the test is passed
    - ■ The test has been **PASSED** if the overall fit factor is at least 100 for a half facepiece, **OR** 500 for a full facepiece
    - ■ The test has **FAILED** if the overall fit factor is below 100 for a half facepiece or 500 for a full facepiece.

    Note:
    If the test has failed, have the employee select another respirator model or size following Table 11 **AND** repeat this procedure.

Table 17

Controlled Negative Pressure (CNP) Test Procedure

Important!

- This is a quantitative fit-test (QNFT) procedure
- This method determines respirator fit by measuring how much the facepiece leaks when it is subject to a slight negative pressure **AFTER** various premeasurement activities
- Measurements occur while employees remain still **AND** hold their breath for 10 seconds
- No test aerosols are used. Respirator cartridges aren't needed for this test.

Test Preparations

1. Make sure the individual conducting the fit test is thoroughly trained to perform this test.

2. Obtain a CNP test instrument such as a FitTester 3000™. Make sure:

- Defaults are set at:
  - -15mm (-0.58 inches) of water test pressure

  AND

  - A modeled inspiratory flow rate of 53.8 liters per minute
- It has an effective audio warning device that signals when employees fail to hold their breath.

Note:
- You are not required to obtain test recording and printing equipment such as computers OR printers. Hand recording results is acceptable
- To see default settings, check the instrument's "REDON protocol."

3. Obtain facepiece adapters appropriate for each test respirator.

Controlled Negative Pressure (CNP) Test Procedure
Note: • Adapters are either a one-piece (for SCBA facepieces), OR two-piece (for dual cartridge facepieces) device providing a manifold and breathing valve system. For positive pressure respirators, you will need to obtain an additional fitting, available from the respirator manufacturer, to convert the facepiece to negative pressure • To obtain adapters, contact the CNP instrument's distributor, Occupational Health Dynamics, **OR** the respirator manufacturer.
Test
Important! After the test, you must ask the employee about the comfort of the respirator **AND** if the respirator has become unacceptable, another size or model must be chosen and tested. 4. Explain the test procedure to the employee. 5. Train the employee on how to hold a breath for at least 20 seconds. 6. Prepare the respirator for the fit test as follows: • Remove or prop open the inhalation valves. If a breathing tube is present, disconnect it

Controlled Negative Pressure (CNP) Test Procedure
• Replace cartridges, if present, with the manifold and breathing valve adapter - For positive pressure facepieces, mount the manufacturer's additional fitting followed by the manifold-breathing valve adapter • Connect the respirator to the CNP device according to the CNP instrument manufacturer's directions. 7. Have the employee put on, adjust, and seal check the respirator. 8. Turn on the instrument **AND** have the employee stand and perform the fit-test exercises in Table 19. 9. Interpret the test results: • The test is **PASSED IF** the overall fit factor obtained is at least 100 for a half facepiece, or at least 500 for a full facepiece • The test has **FAILED IF** the fit factor is less than 100 for a half facepiece; 500 for a full facepiece - If the test has **FAILED** you must have the employee select another respirator model or size following the steps in Table 11 **AND** repeat this procedure, starting at Step 6.

Table 18

Generated Aerosol Test Procedure
Important: • This is a quantitative (QNFT) fit-test procedure • In this method, a test aerosol is used to challenge the facepiece seal while aerosol concentrations inside and outside the facepiece are measured during test exercises • Special equipment is needed to generate, disperse, detect, and measure test aerosols.
Test Preparations
1. Test aerosol. • Use a particulate, for example, corn oil, polyethylene glycol 400, di-2-ethyl hexyl sebacate, or sodium chloride. 2. Instrumentation. • Do **ALL** the following: - Obtain and use aerosol generation, dilution, and measurement systems appropriate for particulates - Use an aerosol-generating instrument that will maintain test concentrations within a 10% variation - Select a sampling instrument that allows for a computer record or strip chart record to be created ■ The record must show the rise and fall of test agent concentration during each inhalation and exhalation at fit factors of at least 2000. **Note:** Integrators, or computers that integrate the amount of test agent penetration leakage into the respirator for each exercise, may be used if a record of the readings is made. - Minimize the time interval between the activity and the recording of the activity so you can clearly connect what you see to what is being recorded. For example, use a small diameter and length of sampling line. 3. Test enclosure. • Do **ALL** the following:

Generated Aerosol Test Procedure

- Make sure the enclosure is equipped and constructed to effectively:
  - ■ Maintain a uniform concentration of the test agent inside the enclosure. For example, the enclosure must be large enough to allow **ALL** employees freedom of movement during testing **WITHOUT** disturbing the test concentration or measurement instrument
  - ■ Keep the test agent from contaminating the air outside the enclosure. For example, use a HEPA filter to purify exhausted air
  - ■ Allow the individual conducting the fit test to view the employee during the test
- Make sure the tubing used to collect samples from the enclosure **AND** respirator is the same material, diameter, **AND** length. This makes the effect of aerosol loss caused by deposition in each sample line equal
- If sodium chloride is used, relative humidity inside the enclosure must be kept below 50%.

4. Prepare test respirators.
   - • Do **ALL** the following:
     - Inspect test respirators regularly for missing parts **AND** damage
     - Keep test respirators in proper working order
     - Make sure in-mask sampling probes are:
       - ■ Designed and installed so the air sample will be drawn from the employee's breathing zone; midway between the nose and mouth

       AND
       - ■ The probe extends inside the facepiece at least 1/4 inch
     - Make sure sampling ports such as probes, or adapters on respirators are constructed and installed so they do **NOT:**
       - ■ Block air flow into the sampling line
       - ■ Leak
       - ■ Interfere with the respirator's fit or performance
   - • Have high efficiency particulate air (HEPA) filters **OR** P100 series filter available
     - Replace filters when increased breathing resistance is detected **OR** when the test agent has altered the filter material's integrity.

Test

Important!

- • Throughout the test, maintain the employee's exposure to any test agent below the established exposure limit. Exposures allowed must be based on exposure time and exposure limit duration
- • If a single peak penetration exceeds 5% for half facepieces OR 1% for full facepieces:
  - **STOP** the test

  AND
  - Have the employee select another respirator for testing.

5. Have the employee attach filters, put on, adjust, and seal check the respirator.
   - • Be sure to crimp the sampling line to avoid pressure leaks during the seal check

   AND
   - • Have the employee adjust the respirator straps, without assistance, so the fit is comfortable. Do **NOT** over tighten.
6. **OPTIONAL Step.** To save time conduct a screening test to quickly identify poorly fitting respirators.

   Note: You may use a qualitative screening test **OR** an ambient aerosol condensation nuclei counter instrument in the count mode.
7. Make sure test aerosol concentration is reasonably stable.
   - • If a canopy or shower curtain enclosure is used, determine stability of the test aerosol concentration **AFTER** the employee enters the enclosure.
8. Have the employee enter the test enclosure and connect the respirator to the sample lines.
9. Immediately after entering the enclosure measure test aerosol concentration inside the respirator.

Generated Aerosol Test Procedure

- Make sure the peak penetration does **NOT** exceed 5% for half facepieces, **OR** 1% for full facepieces.

10. Have employee perform the appropriate fit-test exercises in Table 19.
    - Do **NOT** adjust the respirator once exercises begin.
11. Calculate the overall fit factor as specified in Steps 12-13. The fit test is:
    - **PASSED IF** the minimum fit factor of 100 for half facepieces **OR** 500 for full facepieces is obtained

    OR

    - IF a passing fit factor is **NOT** obtained, the test has **FAILED** and you must have the employee select and test another respirator.

Calculations

Important!

- Do **NOT** count the grimace exercise measurements during these calculations
- Take into account the limitations of instrument detection when determining fit factors.

12. Calculate individual fit factors for **EACH** exercise by applying the following:

$$\text{Exercise fit factor (ffE)} = \frac{\text{Average test enclosure concentration}}{\text{Test aerosol concentration inside the respirator}}$$

- To determine the average test enclosure concentration use one of the following methods:
  - Arithmetic average of the concentration before and after each **test** (an average of two values per entire test)
  - Arithmetic average of concentration before and after each **exercise** (an average of two values per exercise)
  - True average measured continuously during the respirator sample
- Determine the test aerosol concentration inside the respirator in one of the following ways:
  - Average peak penetration values. Determine aerosol penetration for each exercise by:
    - Using integrators or computers that calculate the actual test agent penetration

    OR

    - Average the peak heights shown on the strip chart recording, graph, or by computer integration
  - Maximum peak penetration. Use strip chart recordings to determine the highest peak penetration for each exercise and use this value
  - Area under the peaks. Use computerized integration or other appropriate calculations to integrate the area under individual peaks for each exercise.

13. Using individual exercise fit factors (ffE) calculate the **overall fit factor** by doing **ALL** of the following:
    - Convert each exercise fit factor to a penetration value
    - Determine the average penetration value
    - Convert the average penetration value back to a fit factor

    OR

    - Use this equation to calculate the **overall fit factor:**

$$\text{Overall fit factor} = \frac{n}{1/ffE1 + 1/ffE2 + 1/ffE3 \ldots + 1/ffEn}$$

Table 19

Fit-Test Exercises

Important:

• This list applies when you use any fit test

• Employees tested must perform **ALL** exercises marked with an "X" as described for the fit-test procedure used

- Once exercises begin, any adjustments made void the test AND you must begin again
- After test exercises are completed, you must ask the employee about the comfort of the respirator. If it has become unacceptable, have the employee choose another one for testing

• When the controlled negative pressure procedure is used, **STOP and repeat** the test if the employee adjusts the respirator OR takes a breath and fails to hold it for 10 seconds

• Controlled negative pressure tests conducted according to the method published in 29 C.F.R. 1910.134, Appendix A are an acceptable alternative to the method outlined below.

	Fit-Test Procedures		
Description of Required Fit-Test Exercises	Qualitative Procedures	Quantitative Procedures; **EXCEPT** the **CNPP**	Controlled Negative Pressure Procedure (CNPP)
• Normal breathing - Breathe normally, while standing for one minute	X	X	
• Deep breathing - Breathe slowly and deeply while standing for one minute - Take caution to avoid hyperventilating	X	X	
• Head side to side - Slowly turn head from side to side while standing for one minute, pausing at each extreme position to inhale - Be careful to **NOT** bump the respirator	X	X	
• Head up and down - Slowly move head up and down while standing for one minute, inhaling in the up position - Be careful to **NOT** bump the respirator	X	X	
• Talking - Talk slowly and loud enough to be heard clearly by the individual conducting fit testing for one minute. Choose **ONE** of the following: ■ Read from a prepared text such as the Rainbow Passage[1] ■ Count backward from 100 ■ Recite a memorized poem or song.	X	X	
• Grimace - Smile or frown for fifteen seconds.		X	
• Bending over - Bend over to touch toes while standing. Repeat at a comfortable pace for one minute **OR** - Jog in place for one minute if the test enclosure, such as a hood, does not permit bending over	X	X	
• Normal breathing - Breathe normally while standing for one minute	X	X	

Fit-Test Exercises			
• Face forward - **Premeasurement activity:** Stand and breath normally, without talking - **Measurement position:** Face forward while holding breath for 10 seconds			X
• Bending over - **Premeasurement activity:** While standing, bend over to touch toes - **Measurement position:** Hold the bending position with face parallel to the floor while holding breath for 10 seconds			X
• Head shaking - **Premeasurement activity:** Vigorously shake head from side to side for 3 seconds while shouting or making the sound of "BRRRR" loudly - **Measurement position:** Face forward, while holding breath for 10 seconds			X
• Redon-1 - **Premeasurement activity:** Remove the respirator completely and put it back on - **Measurement position:** Face forward while holding breath for 10 seconds			X
• Redon-2 - Repeat the premeasurement activity and measurement position described in Redon-1			X

[1] The Rainbow Passage:

"When the sunlight strikes raindrops in the air, they act like a prism and form a rainbow. The rainbow is a division of white light into many beautiful colors. These take the shape of a long round arch, with its path high above, and its two ends apparently beyond the horizon. There is, according to legend, a boiling pot of gold at one end. People look, but no one ever finds it. When a man looks for something beyond reach, his friends say he is looking for the pot of gold at the end of the rainbow."

[Statutory Authority: RCW 49.17.010, 49.17.040, 49.17.050, 49.17.060. WSR 05-01-166, § 296-307-62010, filed 12/21/04, effective 4/2/05.]

WAC 296-307-62015 Follow procedures established for cleaning and disinfecting respirators.
You must:
• Follow the procedure in Table 20 for cleaning and disinfecting respirators.

Table 20
Respirator Cleaning Procedure

Step	Task
1.	Remove filters, cartridges, canisters, speaking diaphragms, demand and pressure valve assemblies, hoses, or any components recommended by the manufacturer. • Discard or repair any defective parts.
2.	Wash components in warm (43°C (110°F) maximum) water with a mild detergent or with a cleaner recommended by the manufacturer • A stiff bristle (not wire) brush may be used to help remove the dirt • If the detergent or cleaner does not contain a disinfecting agent, respirator components should be immersed for two minutes in one of the following: - A bleach solution (concentration of 50 parts per million of chlorine). Make this by adding approximately one milliliter of laundry bleach to one liter of water at 43°C (110°F) - A solution of iodine (50 parts per million iodine). Make this in two steps:

Step	Task
	■ First, make a tincture of iodine by adding 6-8 grams of solid ammonium iodide and/or potassium iodide to 100 cc of 45% alcohol approximately ■ Second, add 0.8 milliliters of the tincture to one liter of water at 43°C (110°F) to get the final solution - Other commercially available cleansers of equivalent disinfectant quality when used as directed, if their use is recommended or approved by the respirator manufacturer.
3.	Rinse components thoroughly in clean, warm (43°C (110°F) maximum), preferably, running water. **Note:** The importance of thorough rinsing cannot be overemphasized. Detergents or disinfectants that dry on facepieces could cause dermatitis. In addition, some disinfectants may cause deterioration of rubber or corrosion of metal parts, if not completely removed.
4.	Drain components.
5.	Air-dry components or hand dry components with a clean, lint-free cloth.
6.	Reassemble the facepiece components. • Replace filters, cartridges, and canisters, if necessary (for testing).
7.	Test the respirator to make sure all components work properly.

[Statutory Authority: RCW 49.17.010, 49.17.040, 49.17.050, 49.17.060. WSR 05-01-166, § 296-307-62015, filed 12/21/04, effective 4/2/05.]

WAC 296-307-62020 Follow procedures established for seal checking respirators.

IMPORTANT:

• User seal checks are **NOT** a substitute for fit tests. See WAC 296-307-62010 for fit test procedures.

• You may use a seal check procedure recommended by the respirator manufacturer **INSTEAD** of the procedure outlined in Table 21 if you can demonstrate the procedure is based on a scientific study that, for example, demonstrates the procedure effectively identifies respirators that fit poorly when put on or adjusted.

You must:

• Make sure employees perform a user seal check as outlined in Table 21, **EACH TIME** the respirator is worn, to make sure the seal is adequate.

Table 21

User Seal Check Procedure
Important information for employees: • You need to conduct a seal check **each time** you put your respirator on **BEFORE** you enter the respirator use area. The purpose of a seal check is to make sure your respirator (which has been previously fit tested by your employer) is properly positioned on your face to prevent leakage during use and to detect functional problems • The procedure below has two parts; a positive pressure check and a negative pressure check. **You must complete both parts each time.** It should only take a few seconds to perform, once you learn it - If you cannot pass both parts, your respirator is NOT functioning properly, see your supervisor for further instruction.
Positive pressure check: 1. Remove exhalation valve cover, if removable. 2. Cover the exhalation valve completely with the palm of your hand **WHILE** exhaling gently to inflate the facepiece slightly. 3. The respirator facepiece should remain inflated (indicating a build-up of positive pressure and **NO** outward leakage). • If you detect **NO** leakage, replace the exhalation valve cover (if removed), and proceed to conduct the negative pressure check • If you detect evidence of leakage, reposition the respirator (after removing and inspecting it), and try the positive pressure check again.
Negative pressure check: 4. Completely cover the inhalation opening(s) on the cartridges or canister with the palm(s) of your hands **WHILE** inhaling gently to collapse the facepiece slightly. • If you cannot use the palm(s) of your hands to effectively cover the inhalation openings on cartridges or canisters, you may use: - Filter seal(s) (if available) **OR** - Thin rubber gloves. 5. Once the facepiece is collapsed, hold your breath for 10 seconds **WHILE** keeping the inhalation openings covered. 6. The facepiece should remain slightly collapsed (indicating negative pressure and **NO** inward leakage). • If you detect **NO** evidence of leakage, the tightness of the facepiece is considered adequate, the procedure is completed, and you may now use the respirator • If you detect leakage, reposition the respirator (after removing and inspecting it) and repeat **BOTH** the positive and negative fit checks.

[Statutory Authority: RCW 49.17.010, 49.17.040, 49.17.050, 49.17.060. WSR 05-01-166, § 296-307-62020, filed 12/21/04, effective 4/2/05.]

WAC 296-307-622 Definitions.

Air-purifying respirator (APR)

A respirator equipped with an air-purifying element such as a filter, cartridge, or canister, **OR** having a filtering facepiece, for example, a dust mask.

The element or filtering facepiece is designed to remove specific contaminants, such as particles, vapors, or gases, from air that passes through it.

Air-line respirator

An atmosphere-supplying respirator for which breathing air is drawn from a source separate from and not worn by the user, such as:

• A cylinder or a tank
• A compressor
• An uncontaminated environment.

Air supplied respirator (see air-line respirator)

Assigned protection factor (APF)

Indicates the expected level of workplace respiratory protection WHEN the respirator is:

• Functioning properly
AND
• Fitted to the user
AND
• Worn by trained individuals
AND
• Used with the limitations specified on the NIOSH approval label.

Atmosphere-supplying respirator

A respirator that supplies the user with breathing air from sources, such as:

• A cylinder or a tank
• A compressor
• An uncontaminated environment.

Breathing air

Air supplied to an atmosphere-supplying respirator. This air meets the specifications found in WAC 296-307-616.

Canister or cartridge (air-purifying)

Part of an air-purifying respirator that consists of a container holding materials such as fiber, treated charcoal, or a combination of the two, that removes contaminants from the air passing through the cartridge or canister.

Cartridge respirator (see also air-purifying respirator)

An air-purifying respirator equipped with one or more cartridges. These respirators have a facepiece made from silicone, rubber OR other plastic-like materials.

Demand respirator

An atmosphere-supplying respirator that sends breathing air to the facepiece only when suction (negative pressure) is created inside the facepiece by inhalation. Demand respirators are **"negative pressure"** respirators.

Dust mask

A name used to refer to filtering-facepiece respirators. Dust masks may or may not be NIOSH certified. See filtering facepiece.

Emergency respirator

Respirators suitable for rescue, escape, or other activities during emergency situations.

Emergency situation

Any occurrence that could **OR** does result in a significant uncontrolled release of an airborne contaminant. Causes of emergency situations include, but are not limited to, equipment failure, rupture of containers, or failure of control equipment.

End-of-service-life indicator (ESLI)

A system that warns the air-purifying respirator user that cartridges or canisters must be changed. An example of an ESLI is a dot on the respirator cartridge that changes color.

Escape-only respirator

A respirator that can only be used to exit during emergencies. Look for this use limitation on the respirator's NIOSH approval label.

Exposed, or exposure

The contact an employee has with a toxic substance, harmful physical agent, or oxygen deficient condition. Exposure can occur through various routes of entry, such as inhalation, ingestion, skin contact, or skin absorption.

Filter

Fibrous material that removes dust, spray, mist, fume, fog, smoke particles, **OR** other aerosols from the air.

Filtering-facepiece respirator

A tight-fitting, half-facepiece, negative-pressure, particulate air-purifying respirator with the facepiece **MAINLY** composed of filter material. These respirators do not use cartridges or canisters and may have sealing surfaces composed of rubber, silicone or other plastic-like materials. They are sometimes referred to as "dust masks."

Fit factor

A number providing an estimate of fit for a particular respiratory inlet covering to a specific individual during quantitative fit testing.

Fit test (see also qualitative fit test and quantitative fit test)

Fit testing is an activity where the facepiece seal of a respirator is challenged, using a WISHA accepted procedure, to determine if the respirator provides an adequate seal.

Full-facepiece respirator

A tight-fitting respirator that covers the wearer's nose, mouth, and eyes.

Gas mask

An air-purifying respirator equipped with one or more canisters. These respirators have a facepiece made from silicone, rubber OR other plastic-like materials.

Half-facepiece respirator

A tight-fitting respirator that only covers the wearer's nose and mouth.

Helmet

The rigid part of a respirator that covers the wearer's head AND also provides head protection against impact or penetration.

High-efficiency particulate air filter (HEPA)

A powered air purifying respirator (PAPR) filter that removes at least 99.97% of monodisperse dioctyl phthalate (DOP) particles with a mean particle diameter of 0.3 micrometer from contaminated air.

Note: Filters designated, under 42 C.F.R. Part 84, as an "N100," "R100," or "P100" provide the same filter efficiency (99.97%) as HEPA filters.

Hood

The part of a respirator that completely covers the wearer's head and neck AND may also cover some or all of the shoulders and torso.

Immediately dangerous to life or health (IDLH)

An atmospheric condition that would:

• Cause an immediate threat to life

OR

• Cause permanent or delayed adverse health effects

OR

• Interfere with an employee's ability to escape.

Licensed health care professional (LHCP)

An individual whose legally permitted scope of medical practice allows him or her to provide **SOME OR ALL** of the health care services required for respirator users' medical evaluations.

Loose-fitting facepiece

A respiratory inlet covering that is designed to form a partial seal with the face.

Negative-pressure respirator

Any tight-fitting respirator in which the air pressure inside the facepiece is less than the air pressure outside the respirator during inhalation.

NIOSH

The National Institute for Occupational Safety and Health. NIOSH is the federal agency that certifies respirators for occupational use.

Oxygen deficient

An atmosphere with an oxygen content below 19.5% by volume.

Permissible exposure limit (PEL)

Permissible exposure limits (PELs) are employee exposures to toxic substances or harmful agents that must not be exceeded. PELs are specified in applicable WISHA chapters.

Positive-pressure respirator

A respirator in which the air pressure inside the respiratory-inlet covering is greater than the air pressure outside the respirator.

Powered air-purifying respirators (PAPRs)

An air-purifying respirator equipped with a blower that draws ambient air through cartridges or canisters. These respirators, as a group, are **NOT** classified as positive pressure respirators and must not be used as such.

Pressure-demand respirator

A positive-pressure atmosphere-supplying respirator that sends breathing air to the respiratory inlet covering when the positive pressure is reduced inside the facepiece by inhalation or leakage.

Qualitative fit test (QLFT)

A test that determines the adequacy of respirator fit for an individual. The test relies on the employee's ability to detect a test substance. Test results are either "pass" or "fail."

Quantitative fit test (QNFT)

A test that determines the adequacy of respirator fit for an individual. The test relies on specialized equipment that performs numeric measurements of leakage into the respiratory inlet covering. Test results are used to calculate a "fit factor."

Respiratory hazard

Harmful airborne hazards and oxygen deficiency that are addressed in WAC 296-307-624, Identifying and controlling airborne hazards and oxygen deficiency.

Required use

Respirator use:

• That is necessary to protect employees from respiratory hazards

OR

• That the employer decides to require for his or her own reasons. For example, the employer decides to follow more rigorous exposure limits

• The employer for his or her own reasons. For example, the employer decides to follow more rigorous exposure limits, **OR** the employer is required to follow a medical recommendation.

Respirator

A type of personal protective equipment designed to protect the wearer from harmful airborne hazards, oxygen deficiency, or both.

Respiratory inlet covering

The part of a respirator that forms the protective barrier between the user's respiratory tract and an air-purifying device or breathing air source or both. The respiratory inlet covering may be a facepiece, helmet, hood, suit, or mouthpiece respirator with nose clamp.

Seal check

Actions conducted by the respirator user each time the respirator is put on, to determine if the respirator is properly seated on the face.

Self-contained breathing apparatus (SCBA)

An atmosphere-supplying respirator designed for the breathing air source, to be carried by the user.

Service-life

The period of time that a respirator, filter or sorbent, or other respiratory equipment provides adequate protection to the wearer. For example, the period of time that sorbent cartridge is effective for removing a harmful substance from the air.

Sorbent

Rigid, porous material, such as charcoal, used to remove vapor or gas from the air.

Supplied-air respirator (see air-line respirator)

Tight-fitting facepiece

A respiratory inlet covering forming a complete seal with the face OR neck. Mouthpiece respirators aren't tight-fitting facepieces.

Voluntary use

Respirator use that is requested by the employee **AND** permitted by the employer when **NO** respiratory hazard exists.

[Statutory Authority: RCW 49.17.010, 49.17.040, 49.17.050, 49.17.060. WSR 05-01-166, § 296-307-622, filed 12/21/04, effective 4/2/05.]

Part Y-6

Respiratory Hazards

WAC 296-307-624 Scope.

This part applies **only** if your employees:

• Are exposed to a respiratory hazard

OR

• Could be exposed to one of the specific hazards listed below.

This part applies to any workplace with potential or actual employee exposure to respiratory hazards. It requires you to protect employees from respiratory hazards by applying this protection strategy:

• Evaluate employee exposures to determine if controls are needed

• Use feasible controls. For example, enclose or confine the operation, use ventilation systems, or substitute with less toxic material

• Use respirators if controls are not feasible or if they cannot completely remove the hazard.

Definition:

Exposed or exposure:

The contact an employee has with a toxic substance, harmful physical agent or oxygen deficient condition, whether or not protection is provided by respirators or other personal protective equipment (PPE). Exposure can occur through various routes of entry, such as inhalation, ingestion, skin contact, or skin absorption.

Note: Examples of substances that may be respiratory hazards when airborne include:

• Chemicals listed in Table 3

• Any substance

- Listed in the latest edition of the NIOSH Registry of Toxic Effects of Chemical Substances

- For which positive evidence of an acute or chronic health hazard exists through tests conducted by, or known to, the employer

- That may pose a hazard to human health as stated on a material safety data sheet kept by, or known to, the employer

• Atmospheres considered oxygen deficient

• Biological agents such as harmful bacteria, viruses or fungi

- Examples include airborne TB aerosols and anthrax

• Pesticides with a label requirement for respirator use

• Chemicals used as crowd control agents such as pepper spray

• Chemicals present at clandestine drug labs.

These substances can be airborne as dusts, fibers, fogs, fumes, mists, gases, smoke, sprays, vapors, or aerosols.

Reference: • Substances in Table 3 that are marked with an X in the "skin" column may require personal protective equipment (PPE). See WAC 296-307-100, Personal protective equipment, for additional information and requirements.

• If any of the following hazards are present in your workplace, you will need both this part and any of the following specific rules that apply:

Hazard
Acrylonitrile
Arsenic (inorganic)
Asbestos
Benzene
Butadiene
Cadmium
Carcinogens
Coke ovens
Cotton dust
1,2-Dibromo-3-chloropropane
Ethylene oxide
Formaldehyde
Lead
Methylene chloride
Methylenedianiline
Thiram
Vinyl chloride

[Statutory Authority: RCW 49.17.010, 49.17.040, 49.17.050, 49.17.060. WSR 06-08-087, § 296-307-624, filed 4/4/06, effective 9/1/06; WSR 05-01-166, § 296-307-624, filed 12/21/04, effective 4/2/05.]

WAC 296-307-626 Evaluate and control employee exposures.

Summary:

Your responsibility:

To protect your employees from exposure to respiratory hazards in the workplace by identifying and controlling the hazards.

You must:

Identify and evaluate employee exposures
WAC 296-307-62605
Control employee exposures
WAC 296-307-62610
Use respirators
WAC 296-307-62615
Notify employees
WAC 296-307-62620
Permissible exposure limits of air contaminants
WAC 296-307-62625.

[Statutory Authority: RCW 49.17.010, 49.17.040, 49.17.050, 49.17.060. WSR 05-01-166, § 296-307-626, filed 12/21/04, effective 4/2/05.]

WAC 296-307-62605 Identify and evaluate respiratory hazards.

You must:

• Make sure employees are protected from potentially hazardous exposure while you perform your evaluation

• Perform your evaluation without considering the protection provided to employees by a respirator

• Determine the form of the hazard, such as dust, mist, gas, oxygen deficiency, or biological agent

• Make sure you consider:

- Potential emergency and rescue situations that may occur, such as equipment or power failures, uncontrolled chemical reactions, fire, explosion, or human error

- Workplace conditions such as work processes, types of material, control methods, work practices and environmental conditions.

• Determine or reasonably estimate whether any employee is or could be exposed to any of the following:

- Any airborne substance above a permissible exposure limit (PEL) listed in Table 3

- A substance at or above the action level (AL) specified in the rule for that substance

- Any other respiratory hazard.

• Use **any** of the following to determine employee exposure:

- Information that would allow an estimate of the level of employee exposure, such as MSDSs or pesticide labels, observations, measurements or calculations

- Data demonstrating that a particular product, material or activity cannot result in employee exposure at or above the AL or PEL

- Personal air samples that represent an employee's usual or worst case exposure for the entire shift.

Note: • Rules for specific substances may contain additional requirements for determining employee exposure.

• Use methods of sampling and analysis that have been validated by the laboratory performing the analysis.

• Samples from a representative group of employees may be used for other employees performing the same work activities when the duration and level of exposure are similar.

You must:

• Consider the atmosphere to be immediately dangerous to life or health (IDLH) when you cannot determine or reasonably estimate employee exposure

• Make sure employee exposure, to 2 or more substances with additive health effects, is evaluated using this formula:

$$E_m = \frac{C_1}{L_1} + \frac{C_2}{L_2} + \ldots + \frac{C_n}{L_n}$$

The symbol	Is the . . .
E	Equivalent exposure for the mixture. **When the value of E is greater than 1, a respiratory hazard is present.**
C	Concentration of a particular substance.
L	TWA, STEL, or ceiling for that substance from Table 3.

[Statutory Authority: RCW 49.17.010, 49.17.040, 49.17.050, 49.17.060. WSR 05-01-166, § 296-307-62605, filed 12/21/04, effective 4/2/05.]

WAC 296-307-62610 Control employee exposures.

You must:

• Use feasible controls to protect employees from exposure to respiratory hazards by:

- Reducing employee exposure to a level that removes the respiratory hazard, such as to a level below the permissible exposure limit (PEL) in Table 3;

OR

- Reducing the exposure to the lowest achievable level, when the respiratory hazard cannot be removed.

Note: The following table gives you examples of control methods.

Table 1
Examples of Possible Controls

Control:	For example:
Using a different chemical (substitution)	• Choose a chemical with a lower evaporation rate or vapor pressure. • Choose a chemical without hazardous ingredients.
Changing a process to lessen emissions	• Use hand rolling or paint dipping instead of paint spraying. • Bolt items instead of welding them.
Separating employees from emissions areas and sources	• Use control rooms. • Build an enclosure around process machinery or other emissions sources. • Automate a process.
Removing emissions at or near the source (local exhaust ventilation)	• Install exhaust hoods or slots to capture emissions. • Use an exhausted enclosure (like a blasting cabinet or laboratory hood).
Diluting and removing emissions in the work area (general exhaust ventilation)	• Allow natural air movement to create an adequate airflow through an area. • Use mechanical fans.
Modify work practices	• Change the position of the worker relative to the work so fumes, vapors, or smoke do not go into their face.
Rotate employees - Some specific rules prohibit the use of this control method	• Move employees to another job that is without exposure, on a schedule to keep their total exposure below the permissible exposure limit.

[Statutory Authority: RCW 49.17.010, 49.17.040, 49.17.050, 49.17.060. WSR 05-01-166, § 296-307-62610, filed 12/21/04, effective 4/2/05.]

WAC 296-307-62615 Use respirators.

You must:

• Require employees to use respiratory protection when respiratory hazards have not been removed using feasible controls. For example, use respirators at any of the following times:

- While controls are being evaluated or put in place
- When the respiratory hazard is not completely removed
- When controls are **not** feasible.

Reference: See WAC 296-307-594, Respirators, for respirator program requirements.

[Statutory Authority: RCW 49.17.010, 49.17.040, 49.17.050, 49.17.060. WSR 05-01-166, § 296-307-62615, filed 12/21/04, effective 4/2/05.]

WAC 296-307-62620 Notify employees.

You must:

• Notify employees who are or may be exposed to respiratory hazards, as specified in Table 2.

Note: • The notification may be provided either individually, to a group, or by posting of results in an appropriate location that's accessible to affected employees.

Table 2
Notification Requirements

Notify employees of:	As follows:
Any exposure result above a permissible exposure limit (PEL)	Within five business days, after the employee's exposure result is known to the employer
The corrective action being taken to reduce employee exposure to or below the PEL **AND** The schedule for completion of the corrective action and any reasons why exposures cannot be lowered to below the PEL	Within fifteen business days, after the employee's exposure result is known to the employer
An exposure to these substances: • Acrylonitrile • Arsenic (inorganic) • Asbestos • Benzene • Butadiene • Cadmium • Coke oven emissions • Cotton dust • 1,2-Dibromo-3-chloropropane • Ethylene oxide • Formaldehyde • Lead • Methylene chloride • Methylenedianiline • Vinyl chloride	In writing, as specified in the rule specific to the substance

[Statutory Authority: RCW 49.17.010, 49.17.040, 49.17.050, 49.17.060. WSR 05-01-166, § 296-307-62620, filed 12/21/04, effective 4/2/05.]

WAC 296-307-62625 Permissible exposure limits of air contaminants.

IMPORTANT:

The following information applies to Table 3, Permissible Exposure Limits for Air Contaminants.

• Exposure needs to be determined from personal air samples taken in the breathing zone or from monitoring representative of the employee's breathing zone.

• Ppm refers to parts of vapor or gas per million parts of air by volume, at 25 degrees C and 760 mm Hg pressure.

• Mg/m^3 refers to milligrams of substance per cubic meter of air.

• For a metal that is measured as the metal itself, only the CAS number for the metal is given. The CAS numbers for individual compounds of the metal are not provided. For more information about CAS registry numbers see the web site: http://www.cas.org.

• Time weighted averages (TWA_8) represent the maximum allowed average exposure for any 8-hour time period. For work periods longer than 8 hours the TWA_8 needs to be determined using the 8 continuous hours with the highest average concentration.

• Short-term exposure limits (STEL) represent maximum allowed average exposure for any fifteen-minute period, unless another time period is noted in Table 3.

• The ceiling represents the maximum allowed exposure for the shortest time period that can feasibly be measured.

• An "X" in the "skin" column indicates the substance can be absorbed through the skin, either by airborne or direct contact.

• Requirements for the use of gloves, coveralls, goggles, and other personal protective equipment can be found in WAC 296-307-100.

• The respirable fraction of particulate is measured by sampling with a size-selector having the following characteristics:

Mean aerodynamic diameter in micrometers	Percent passing the selector
1	97
2	91
3	74
4	50
5	30
6	17
7	9
8	5
10	1

Table 3 "Permissible Exposure Limits for Air Contaminants"

Substance	CAS	TWA_8	STEL	Ceiling	Skin
Abate (Temephos)	3383-96-8	——	——	——	——
Total particulate	——	10 mg/m^3	20 mg/m^3	——	——
Respirable fraction	——	5 mg/m^3	10 mg/m^3	——	——
Acetaldehyde	75-07-0	100 ppm	150 ppm	——	——
Acetic acid	64-19-7	10 ppm	20 ppm	——	——
Acetic anhydride	108-24-7	——	——	5 ppm	——
Acetone	67-64-1	750 ppm	1,000 ppm	——	——

Substance	CAS	TWA_8	STEL	Ceiling	Skin
Acetonitrile	75-05-8	40 ppm	60 ppm	——	——
2-Acetylaminofluorene	53-96-3	——	——	——	——
Acetylene	74-86-2	Simple asphyxiant	——	——	——
Acetylene dichloride (1,2-Dichloroethylene)	540-59-0	200 ppm	250 ppm	——	——
Acetylene tetrabromide	79-27-6	1 ppm	3 ppm	——	——
Acetylsalicylic acid (Aspirin)	50-78-2	5 mg/m^3	10 mg/m^3	——	——
Acrolein	107-02-8	0.1 ppm	0.3 ppm	——	——
Acrylamide	79-06-1	0.03 mg/m^3	0.09 mg/m^3	——	X
Acrylic acid	79-10-7	10 ppm	20 ppm	——	X
Acrylonitrile (Vinyl cyanide)	107-13-1	2 ppm	10 ppm	——	——
Aldrin	309-00-2	0.25 mg/m^3	0.75 mg/m^3	——	X
Allyl alcohol	107-18-6	2 ppm	4 ppm	——	X
Allyl chloride	107-05-1	1 ppm	2 ppm	——	——
Allyl glycidyl ether (AGE)	106-92-3	5 ppm	10 ppm	——	——
Allyl propyl disulfide	2179-59-1	2 ppm	3 ppm	——	——
alpha-Alumina (Aluminum oxide)	1344-28-1	——	——	——	——
Total particulate	——	10 mg/m^3	20 mg/m^3	——	——
Respirable fraction	——	5 mg/m^3	10 mg/m^3	——	——
Aluminum (as Al)	7429-90-5	——	——	——	——
Total particulate	——	10 mg/m^3	20 mg/m^3	——	——
Respirable fraction	——	5 mg/m^3	10 mg/m^3	——	——
Pyro powders	——	5 mg/m^3	10 mg/m^3	——	——
Welding fumes	——	5 mg/m^3	10 mg/m^3	——	——
Soluble salts	——	2 mg/m^3	4 mg/m^3	——	——
Alkyls (NOC)	——	2 mg/m^3	4 mg/m^3	——	——
Aluminum oxide (Alundum, Corundum)	7429-90-5	——	——	——	——
Total particulate	——	10 mg/m^3	20 mg/m^3	——	——
Respirable fraction	——	5 mg/m^3	10 mg/m^3	——	——
4-Aminodiphenyl	92-67-1	——	——	——	——
2-Aminoethanol (Ethanolamine)	141-43-5	3 ppm	6 ppm	——	——
2-Aminopyridine	504-29-0	0.5 ppm	1.5 ppm	——	——
Amitrole	61-82-5	0.2 mg/m^3	0.6 mg/m^3	——	——
Ammonia	7664-41-7	25 ppm	35 ppm	——	——
Ammonium chloride, fume	12125-02-9	10 mg/m^3	20 mg/m^3	——	——
Ammonium sulfamate (Ammate)	7773-06-0	——	——	——	——
Total particulate	——	10 mg/m^3	20 mg/m^3	——	——
Respirable fraction	——	5.0 mg/m^3	10 mg/m^3	——	——
n-Amyl acetate	628-63-7	100 ppm	150 ppm	——	——
sec-Amyl acetate	626-38-0	125 ppm	156 ppm	——	——
Aniline and homologues	62-53-3	2 ppm	4 ppm	——	X
Anisidine (o, p-isomers)	29191-52-4	0.1 ppm	0.3 ppm	——	X
Antimony and compounds (as Sb)	7440-36-0	0.5 mg/m^3	1.5 mg/m^3	——	——
ANTU (alpha Naphthyl thiourea)	86-88-4	0.3 mg/m^3	0.9 mg/m^3	——	——
Argon	7440-37-1	Simple asphyxiant	——	——	——
Arsenic, organic compounds (as As)	7440-38-2	0.2 mg/m^3	0.6 mg/m^3	——	——
Arsenic, inorganic compounds (as As) (when use is covered by WAC 296-62-07347)	7440-38-2	0.01 mg/m^3	——	——	——
Arsenic, inorganic compounds (as As) (when use is not covered by WAC 296-62-07347)	7440-38-2	0.2 mg/m^3	0.6 mg/m^3	——	——

Substance	CAS	TWA_8	STEL	Ceiling	Skin
Arsine	7784-42-1	0.05 ppm	0.15 ppm	——	——
Asbestos	——	——	——	——	——
Asphalt (Petroleum fumes)	8052-42-4	5 mg/m^3	10 mg/m^3	——	——
Atrazine	1912-24-9	5 mg/m^3	10 mg/m^3	——	——
Azinphos methyl (Guthion)	86-50-0	0.2 mg/m^3	0.6 mg/m^3	——	X
Azodrin (Monocrotophos)	6923-22-4	0.25 mg/m^3	0.75 mg/m^3	——	——
Barium, soluble compounds (as Ba)	7440-39-3	0.5 mg/m^3	1.5 mg/m^3	——	——
Barium sulfate	7727-43-7	——	——	——	——
Total particulate	——	10 mg/m^3	20 mg/m^3	——	——
Respirable fraction	——	5 mg/m^3	10 mg/m^3	——	——
Baygon (Propoxur)	114-26-1	0.5 mg/m^3	1.5 mg/m^3	——	——
Benomyl	17804-35-2	——	——	——	——
Total particulate	——	10 mg/m^3	20 mg/m^3	——	——
Respirable fraction	——	5 mg/m^3	10 mg/m^3	——	——
Benzene	71-43-2	1 ppm	5 ppm	——	——
Benzidine	92-87-5	——	——	——	——
p-Benzoquinone (Quinone)	106-51-4	0.1 ppm	0.3 ppm	——	——
Benzo(a) pyrene (Coal tar pitch volatiles)	65996-93-2	0.2 mg/m^3	0.6 mg/m^3	——	——
Benzoyl peroxide	94-36-0	5 mg/m^3	10 mg/m^3	——	——
Benzyl chloride	100-44-7	1ppm	3 ppm	——	——
Beryllium and beryllium compounds (as Be)	7440-41-7	0.002 mg/m^3	0.005 mg/m^3 (30 min.)	0.025 mg/m^3	——
Biphenyl (Diphenyl)	92-52-4	0.2 ppm	0.6 ppm	——	——
Bismuth telluride, undoped	1304-82-1	——	——	——	——
Total particulate	——	10 mg/m^3	20 mg/m^3	——	——
Respirable fraction	——	5 mg/m^3	10 mg/m^3	——	——
Bismuth telluride, Se-doped	——	5 mg/m^3	10 mg/m^3	——	——
Borates, tetra, sodium salts	——	——	——	——	——
Anhydrous	1330-43-4	1 mg/m^3	3 mg/m^3	——	——
Decahydrate	1303-96-4	5 mg/m^3	10 mg/m^3	——	——
Pentahydrate	12179-04-3	1 mg/m^3	3 mg/m^3	——	——
Boron oxide	1303-86-2	——	——	——	——
Total particulate	——	10 mg/m^3	20 mg/m^3	——	——
Boron tribromide	10294-33-4	——	——	1 ppm	——
Boron trifluoride	6737-07-2	——	——	1 ppm	——
Bromacil	314-40-9	1 ppm	3 ppm	——	——
Bromine	7726-95-6	0.1 ppm	0.3 ppm	——	——
Bromine pentafluoride	7789-30-2	0.1 ppm	0.3 ppm	——	——
Bromochloromethane (Chlorobromomthane)	74-97-5	200 ppm	250 ppm	——	——
Bromoform	15-25-2	0.5 ppm	1.5 ppm	——	X
Butadiene (1,3-butadiene)	106-99-0	1 ppm	5 ppm	——	——
Butane	106-97-8	800 ppm	1,000 ppm	——	——
Butanethiol (Butyl mercaptan)	109-79-5	0.5 ppm	1.5 ppm	——	——
2-Butanone (Methyl ethyl ketone)	78-93-3	200 ppm	300 ppm	——	——
2-Butoxy ethanol (Butyl cellosolve)	111-76-2	25 ppm	38 ppm	——	X
n-Butyl acetate	123-86-4	150 ppm	200 ppm	——	——
sec-Butyl acetate	105-46-4	200 ppm	250 ppm	——	——
tert-Butyl acetate	540-88-5	200 ppm	250 ppm	——	——
Butyl acrylate	141-32-2	10 ppm	20 ppm	——	——
n-Butyl alcohol	71-36-3	——	——	50 ppm	X

Substance	CAS	TWA_8	STEL	Ceiling	Skin
sec-Butyl alcohol	78-92-2	100 ppm	150 ppm	——	——
tert-Butyl alcohol	75-65-0	100 ppm	150 ppm	——	——
Butylamine	109-73-9	——	——	5 ppm	X
Butyl cellosolve (2-Butoxy ethanol)	111-76-2	25 ppm	38 ppm	——	——
tert-Butyl chromate (as CrOs)	1189-85-1	——	——	0.1 mg/m^3	X
n-Butyl glycidyl ether (BGE)	2426-08-6	25 ppm	38 ppm	——	——
n-Butyl lactate	138-22-7	5 ppm	10 ppm	—-	——
Butyl mercaptan	109-79-5	0.5 ppm	1.5 ppm	——	——
o-sec-Butylphenol	89-72-5	5 ppm	10 ppm	——	X
p-tert-Butyl-toluene	98-51-1	10 ppm	20 ppm	——	——
Cadmium oxide fume (as Cd)	1306-19-0	0.005 mg/m^3	——	——	——
Cadmium dust and salts (as Cd)	7440-43-9	0.005 mg/m^3	——	——	——
Calcium arsenate	——	0.01 mg/m^3	——	——	——
Calcium carbonate	1317-65-3	——	——	——	——
Total particulate	——	10 mg/m^3	20 mg/m^3	——	——
Respirable fraction	——	5 mg/m^3	10 mg/m^3	——	——
Calcium cyanamide	156-62-7	0.5 mg/m^3	1.5 mg/m^3	——	——
Calcium hydroxide	1305-62-0	5 mg/m^3	10 mg/m^3	——	——
Calcium oxide	1305-78-8	2 mg/m^3	4 mg/m^3	——	——
Calcium silicate	1344-95-2	——	——	——	——
Total particulate	——	10 mg/m^3	20 mg/m^3	——	——
Respirable fraction	——	5 mg/m^3	10 mg/m^3	——	——
Calcium sulfate	7778-18-9	——	——	——	——
Total particulate	——	10 mg/m^3	20 mg/m^3	——	——
Respirable fraction	——	5 mg/m^3	10 mg/m^3	——	——
Camphor (synthetic)	76-22-2	2 mg/m^3	4 mg/m^3	——	——
Caprolactam	105-60-2	——	——	——	——
Dust	——	1 mg/m^3	3 mg/m^3	——	——
Vapor	——	5 ppm	10 ppm	——	——
Captafol (Difolatan)	2425-06-1	0.1 mg/m^3	0.3 mg/m^3	——	X
Captan	133-06-2	5 mg/m^3	10 mg/m^3	——	——
Carbaryl (Sevin)	63-25-2	5 mg/m^3	10 mg/m^3	——	——
Carbofuran (Furadon)	1563-66-2	0.1 mg/m^3	0.3 mg/m^3	——	——
Carbon black	1333-86-4	3.5 mg/m^3	7 mg/m^3	——	——
Carbon dioxide	124-38-9	5,000 ppm	30,000 ppm	——	——
Carbon disulfide	75-15-0	4 ppm	12 ppm	——	X
Carbon monoxide	630-08-0	35 ppm	200 ppm (5 min.)	1,500 ppm	——
Carbon tetrabromide	558-13-4	0.1 ppm	0.3 ppm	——	——
Carbon tetrachloride (Tetrachloromethane)	56-23-5	2 ppm	4 ppm	——	X
Carbonyl chloride (Phosgene)	7803-51-2	0.1 ppm	0.3 ppm	——	——
Carbonyl fluoride	353-50-4	2 ppm	5 ppm	——	——
Catechol (Pyrocatechol)	120-80-9	5 ppm	10 ppm	——	X
Cellosolve acetate (2-Ethoxyethylacetate)	111-15-9	5 ppm	10 ppm	——	X
Cellulose (paper fiber)	9004-34-6	——	——	——	——
Total particulate	——	10 mg/m^3	20 mg/m^3	——	——
Respirable fraction	——	5 mg/m^3	10 mg/m^3	——	——
Cesium hydroxide	21351-79-1	2 mg/m^3	4 mg/m^3	——	——
Chlordane	57-74-9	0.5 mg/m^3	1.5 mg/m^3	——	X

Substance	CAS	TWA_8	STEL	Ceiling	Skin
Chlorinated camphene (Toxaphen)	8001-35-2	0.5 mg/m^3	1 mg/m^3	——	X
Chlorinated diphenyl oxide	55720-99-5	0.5 mg/m^3	1.5 mg/m^3	——	——
Chlorine	7782-50-5	0.5 ppm	——	1 ppm	——
Chlorine dioxide	10049-04-4	0.1 ppm	0.3 ppm	——	——
Chlorine trifluoride	7790-91-2	——	——	0.1 ppm	——
Chloroacetaldehyde	107-20-0	——	——	1 ppm	——
a-Chloroacetophenone (Phenacyl chloride)	532-21-4	0.05 ppm	0.15 ppm	——	——
Chloroacetyl chloride	79-04-9	0.05 ppm	0.15 ppm	——	——
Chlorobenzene (Monochlorobenzene)	108-90-7	75 ppm	113 ppm	——	——
o-Chlorobenzylidene malononitrile (OCBM)	2698-41-1	——	——	0.05 ppm	X
Chlorobromomethane	74-97-5	200 ppm	250 ppm	——	——
2-Chloro-1, 3-butadiene (beta-Chloroprene)	126-99-8	10 ppm	20 ppm	——	X
Chlorodifluoromethane	75-45-6	1,000 ppm	1,250 ppm	——	——
Chlorodiphenyl (42% Chlorine) (PCB) (Polychlorobiphenyls)	53469-21-9	1 mg/m^3	3 mg/m^3	——	X
Chlorodiphenyl (54% Chlorine) (Polychlorobiphenyls (PCB))	11097-69-1	0.5 mg/m^3	1.5 mg/m^3	——	X
1-Chloro-2, 3-epoxypropane (Epichlorhydrin)	106-89-8	2 ppm	4 ppm	——	X
2-Chloroethanol (Ethylene chlorohydrin)	107-07-3	——	——	1 ppm	X
Chloroethylene (vinyl chloride)	75-01-4	1 ppm	5 ppm	——	——
Chloroform (Trichloromethane)	67-66-3	2 ppm	4 ppm	——	——
1-Chloro-1-nitropropane	600-25-9	2 ppm	4 ppm	——	——
bis-Chloromethyl ether	542-88-1	——	——	——	——
Chloromethyl methyl ether (Methyl chloromethyl ether)	107-30-2	——	——	——	——
Chloropentafluoroethane	76-15-3	1,000 ppm	1,250 ppm	——	——
Chloropicrin (Nitrotrichloromethane)	76-06-2	0.1 ppm	0.3 ppm	——	——
beta-Chloroprene (2-Chloro-1, 3-butadiene)	126-99-8	10 ppm	20 ppm	——	X
o-Chlorostyrene	2039-87-4	50 ppm	75 ppm	——	——
o-Chlorotoluene	95-49-8	50 ppm	75 ppm	——	——
2-Chloro-6-trichloromethyl pyridine (Nitrapyrin)	1929-82-4	——	——	——	——
Total particulate	——	10 mg/m^3	20 mg/m^3	——	——
Respirable fraction	——	5 mg/m^3	10 mg/m^3	——	——
Chlorpyrifos	2921-88-2	0.2 mg/m^3	0.6 mg/m^3	——	X
Chromic acid and chromates (as CrO3)	Varies with compound	0.1 mg/m^3	0.3 mg/m^3	——	——
Chromium, soluble, chromic and chromous salts (as Cr)	7440-47-3	0.5 mg/m^3	1.5 mg/m^3	——	——
Chromium (VI) compounds (as Cr)	——	0.05 mg/m^3	0.15 mg/m^3	——	——
Chromium metal and insoluble salts	7440-47-3	0.5 mg/m^3	1.5 mg/m^3	——	——
Chromyl chloride	14977-61-8	0.025 ppm	0.075 ppm	——	——
Chrysene (Coal tar pitch volatiles)	65996-93-2	0.2 mg/m^3	0.6 mg/m^3	——	——
Clopidol	2971-90-6	——	——	——	——
Total particulate	——	10 mg/m^3	20 mg/m^3	——	——
Respirable fraction	——	5 mg/m^3	10 mg/m^3	——	——
Coal dust (less than 5% SiO2)	——	——	——	——	——
Respirable fraction	——	2 mg/m^3	4 mg/m^3	——	——

Substance	CAS	TWA_8	STEL	Ceiling	Skin
Coal dust (greater than or equal to 5% SiO2)	——	——	——	——	——
Respirable fraction	——	0.1 mg/m^3	0.3 mg/m^3	——	——
Coal tar pitch volatiles (benzene soluble fraction) (Particulate polycyclic aromatic hydrocarbons)	65996-93-2	0.2 mg/m^3	0.6 mg/m^3	——	——
Cobalt, metal fume & dust (as Co)	7440-48-4	0.05 mg/m^3	0.15 mg/m^3	——	——
Cobalt carbonyl (as Co)	10210-68-1	0.1 mg/m^3	0.3 mg/m^3	——	——
Cobalt hydrocarbonyl (as Co)	16842-03-8	0.1 mg/m^3	0.3 mg/m^3	——	——
Coke oven emissions	——	0.15 mg/m^3	——	——	——
Copper (as Cu)	7440-50-8	——	——	——	——
Fume	——	0.1 mg/m^3	0.3 mg/m^3	——	——
Dusts and mists	——	1 mg/m^3	3 mg/m^3	——	——
Cotton dust (raw) (waste sorting, blending, cleaning, willowing and garetting)	——	1 mg/m^3	——	——	——
Corundum (Aluminum oxide)	7429-90-5	——	——	——	——
Total particulate	——	10 mg/m^3	20 mg/m^3	——	——
Respirable fraction	——	5 mg/m^3	10 mg/m^3	——	——
Crag herbicide (Sesone, Sodium-2, 4-dichloro-phenoxyethyl sulfate)	136-78-7	——	——	——	——
Total particulate	——	10 mg/m^3	20 mg/m^3	——	——
Respirable fraction	——	5 mg/m^3	10 mg/m^3	——	——
Cresol (all isomers)	1319-77-3	5 ppm	10 ppm	——	X
Crotonaldehyde	123-73-9; 4170-30-3	2 ppm	4 ppm	——	——
Crufomate	299-86-5	5 mg/m^3	10 mg/m^3	——	——
Cumene	98-82-8	50 ppm	75 ppm	——	X
Cyanamide	420-04-2	2 mg/m^3	4 mg/m^3	——	——
Cyanide (as CN)	Varies with compound	5 mg/m^3	10 mg/m^3	——	X
Cyanogen	460-19-5	10 ppm	20 ppm	——	——
Cyanogen chloride	506-77-4	——	——	0.3 ppm	——
Cyclohexane	110-82-7	300 ppm	375 ppm	——	——
Cyclohexanol	108-93-0	50 ppm	75 ppm	——	X
Cyclohexanone	108-94-1	25 ppm	38 ppm	——	X
Cyclohexene	110-83-8	300 ppm	375 ppm	——	——
Cyclohexylamine	108-91-8	10 ppm	20 ppm	——	——
Cyclonite (RDX)	121-82-4	1.5 mg/m^3	3.0 mg/m^3	——	X
Cyclopentadiene	542-92-7	75 ppm	113 ppm	——	——
Cyclopentane	287-92-3	600 ppm	750 ppm	——	——
Cyhexatin (Tricyclohexyltin hydroxide)	13121-70-5	5 mg/m^3	10 mg/m^3	——	——
2,4-D (Dichlorophenoxy-acetic acid)	94-75-7	10 mg/m^3	20 mg/m^3	——	——
DBCP (1,2-Dibromo-3-chloropropane)	96-12-8	0.001 ppm	——	0.005 ppm	——
DDT (Dichlorodiphenyltri-chloroethane)	50-29-3	1 mg/m^3	3 mg/m^3	——	X
DDVP, (Dichlorvos)	62-73-7	0.1 ppm	0.3 ppm	——	X
Dasanit (Fensulfothion)	115-90-2	0.1 mg/m^3	0.3 mg/m^3	——	——
Decaborane	17702-41-9	0.05 ppm	0.15 ppm	——	X
Demeton	8065-48-3	0.01 ppm	0.03 ppm	——	X
Diacetone alcohol (4-hydroxy-4-methyl-2-pentanone)	123-42-2	50 ppm	75 ppm	——	——
1, 2-Diaminoethane (Ethylenediamine)	107-15-3	10 ppm	20 ppm	——	——
Diazinon	333-41-5	0.1 mg/m^3	0.3 mg/m^3	——	X

Substance	CAS	TWA_8	STEL	Ceiling	Skin
Diazomethane	334-88-3	0.2 ppm	0.6 ppm	——	——
Diborane	19287-45-7	0.1 ppm	0.3 ppm	——	——
Dibrom (see Naled)	300-76-5	3 mg/m^3	6 mg/m^3	——	X
1, 2-Dibromo-3-chloropropane (DBCP)	96-12-8	0.001 ppm	——	0.005 ppm	——
2-N-Dibutylamino ethanol	102-81-8	2 ppm	4 ppm	——	X
Dibutyl phosphate	107-66-4	1 ppm	2 ppm	——	——
Dibutyl phthalate	84-74-2	5 mg/m^3	10 mg/m^3	——	——
Dichloroacetylene	7572-29-4	——	——-	0.1 ppm	——
o-Dichlorobenzene	95-50-1	——	——	50 ppm	——
p-Dichlorobenzene	106-46-7	75 ppm	110 ppm	——	——
3, 3'-Dichlorobenzidine	91-94-1	——	——	——	——
Dichlorodiphenyltri-chloroethane (DDT)	50-29-3	1 mg/m^3	3 mg/m^3	——	X
Dichlorodifluoromethane	75-71-8	1,000 ppm	1,250 ppm	——	——
1, 3-Dichloro-5, 5-dimethyl hydantoin	118-52-5	0.2 mg/m^3	0.4 mg/m^3	——	——
1, 1-Dichloroethane (Ethylidine chloride)	75-34-3	100 ppm	150 ppm	——	——
1, 2-Dichloroethane (Ethylene dichloride)	107-06-2	1 ppm	2 ppm	——	——
1, 1-Dichloroethylene (Vinylidene chloride)	75-35-4	1 ppm	3 ppm	——	——
1, 2-Dichloroethylene (Acetylene dichloride)	540-59-0	200 ppm	250 ppm	——	——
Dichloroethyl ether	111-44-4	5 ppm	10 ppm	——	X
Dichlorofluoromethane	75-43-4	10 ppm	20 ppm	——	——
Dichloromethane (Methylene chloride)	75-09-2	25 ppm	125 ppm	——	——
1, 1-Dichloro-1-nitroethane	594-72-9	2 ppm	10 ppm	——	——
Dichlorophenoxyacetic acid (2, 4-D)	94-75-7	10 mg/m^3	20 mg/m^3	——	——
1, 2-Dichloropropane (Propylene dichloride)	78-87-5	75 ppm	110 ppm	——	——
Dichloropropene	542-75-6	1 ppm	3 ppm	——	X
2, 2-Dichloropropionic acid	75-99-0	1 ppm	3 ppm	——	——
Dichlorotetrafluoroethane	76-14-2	1,000 ppm	1,250 ppm	——	——
Dichlorvos (DDVP)	62-73-7	0.1 ppm	0.3 ppm	——	X
Dicrotophos	141-66-2	0.25 mg/m^3	0.75 mg/m^3	——	X
Dicyclopentadiene	77-73-6	5 ppm	10 ppm	——	——
Dicyclopentadienyl iron	102-54-5	——	——	——	——
Total particulate	——	10 mg/m^3	20 mg/m^3	——	——
Respirable fraction	——	5 mg/m^3	10 mg/m^3	——	——
Dieldrin	60-57-1	0.25 mg/m^3	0.75 mg/m^3	——	X
Diethanolamine	111-42-2	3 ppm	6 ppm	——	——
Diethylamine	109-89-7	10 ppm	25 ppm	——	——
2-Diethylaminoethanol	100-37-8	10 ppm	20 ppm	——	X
Diethylene triamine	111-40-0	1 ppm	3 ppm	——	X
Diethyl ether (Ethyl ether)	60-29-7	400 ppm	500 ppm	——	——
Diethyl ketone	96-22-0	200 ppm	250 ppm	——	——
Diethyl phthalate	84-66-2	5 mg/m^3	10 mg/m^3	——	——
Difluorodibromomethane	75-61-6	100 ppm	150 ppm	——	——
Difolatan (Captafol)	2425-06-1	0.1 mg/m^3	0.3 mg/m^3	——	X
Diglycidyl ether (DGE)	2238-07-5	0.1 ppm	0.3 ppm	——	——
Dihydroxybenzene (Hydroquinone)	123-31-9	2 mg/m^3	4 mg/m^3	——	——
Diisobutyl ketone (2, 6-Dimethylheptanone)	108-83-8	25 ppm	38 ppm	——	——
Diisopropylamine	108-18-9	5 ppm	10 ppm	——	X

Substance	CAS	TWA_8	STEL	Ceiling	Skin
Dimethoxymethane (Methylal)	109-87-5	1,000 ppm	1,250 ppm	——	——
Dimethyl acetamide	127-19-5	10 ppm	20 ppm	——	X
Dimethylamine	124-40-3	10 ppm	20 ppm	——	——
4-Dimethylaminoazo benzene	60-11-7	——	——	——	——
Dimethylaminobenzene (Xylidene)	1300-73-8	2 ppm	4 ppm	——	X
Dimethylaniline (N, N-Dimethylaniline)	121-69-7	5 ppm	10 ppm	——	X
Dimethylbenzene (Xylene)	1300-73-8	100 ppm	150 ppm	——	——
Dimethyl-1, 2-dibromo-2, 2-dichloroethyl phosphate (Naled)	300-76-5	3 mg/m^3	6 mg/m^3	——	X
Dimethylformamide	68-12-2	10 ppm	20 ppm	——	X
2, 6-Dimethylheptanone (Diisobutyl ketone)	108-83-8	25 ppm	38 ppm	——	——
1, 1-Dimethylhydrazine	57-14-7	0.5 ppm	1.5 ppm	——	X
Dimethyl phthalate	131-11-3	5 mg/m^3	10 mg/m^3	——	——
Dimethyl sulfate	77-78-1	0.1 ppm	0.3 ppm	——	X
Dinitolmide (3, 5-Dinitro-o-toluamide)	148-01-6	5 mg/m^3	10 mg/m^3	——	——
Dinitrobenzene (all isomers - alpha, meta and para)	528-29-0; 99-65-0; 100-25-4	0.15 ppm	0.45 ppm	——	X
Dinitro-o-cresol	534-52-1	0.2 mg/m^3	0.6 mg/m^3	——	X
3, 5-Dinitro-o-toluamide (Dinitolmide)	148-01-6	5 mg/m^3	10 mg/m^3	——	——
Dinitrotoluene	25321-14-6	1.5 mg/m^3	3 mg/m^3	——	X
Dioxane (Diethylene dioxide)	123-91-1	25 ppm	38 ppm	——	X
Dioxathion	78-34-2	0.2 mg/m^3	0.6 mg/m^3	——	X
Diphenyl (Biphenyl)	92-52-4	0.2 ppm	0.6 ppm	——	——
Diphenylamine	122-39-4	10 mg/m^3	20 mg/m^3	——	——
Diphenylmethane diisocyanate (Methylene bisphenyl isocyanate (MDI))	101-68-8	——	——	0.02 ppm	——
Dipropylene glycol methyl ether	34590-94-8	100 ppm	150 ppm	——	X
Dipropyl ketone	123-19-3	50 ppm	75 ppm	——	——
Diquat	85-00-7	0.5 mg/m^3	1.5 mg/m^3	——	——
Di-sec, Octyl phthalate (Di-2-ethylhexylphthalate)	117-81-7	5 mg/m^3	10 mg/m^3	——	——
Disulfram	97-77-8	2 mg/m^3	4 mg/m^3	——	——
Disulfoton	298-04-4	0.1 mg/m^3	0.3 mg/m^3	——	X
2, 6-Di-tert-butyl-p-cresol	128-37-0	10 mg/m^3	20 mg/m^3	——	——
Diuron	330-54-1	10 mg/m^3	20 mg/m^3	——	——
Divinyl benzene	1321-74-0	10 ppm	20 ppm	——	——
Emery	12415-34-8	——	——	——	——
Total particulate	——	10 mg/m^3	20 mg/m^3	——	——
Respirable fraction	——	5 mg/m^3	10 mg/m^3	——	——
Endosulfan (Thiodan)	115-29-7	0.1 mg/m^3	0.3 mg/m^3	——	X
Endrin	72-20-8	0.1 mg/m^3	0.3 mg/m^3	——	X
Epichlorhydrin (1-Chloro-2, 3-epoxypropane)	106-89-8	2 ppm	4 ppm	——	X
EPN	2104-64-5	0.5 mg/m^3	1.5 mg/m^3	——	X
1, 2-Epoxypropane (Propylene oxide)	75-56-9	20 ppm	30 ppm	——	——
2, 3-Epoxy-1-propanol (Glycidol)	556-52-5	25 ppm	38 ppm	——	——
Ethane	——	Simple asphyxiant	——	——	——
Ethanethiol (Ethyl mercaptan)	75-08-1	0.5 ppm	1.5 ppm	——	——
Ethanol (Ethyl alcohol)	64-17-5	1,000 ppm	1,250 ppm	——	——
Ethanolamine (2-Aminoethanol)	141-43-5	3 ppm	6 ppm	——	——

Substance	CAS	TWA_8	STEL	Ceiling	Skin
Ethion	563-12-2	0.4 mg/m^3	1.2 mg/m^3	——	X
2-Ethoxyethanol (Glycol monoethyl ether)	110-80-5	5 ppm	10 ppm	——	X
2-Ethoxyethyl acetate (Cellosolve acetate)	111-15-9	5 ppm	10 ppm	——	X
Ethyl acetate	141-78-6	400 ppm	500 ppm	——	——
Ethyl acrylate	140-88-5	5 ppm	25 ppm	——	X
Ethyl alcohol (ethanol)	64-17-5	1,000 ppm	1,250 ppm	——	——
Ethylamine	75-04-07	10 ppm	20 ppm	——	——
Ethyl amyl ketone (5-Methyl-3-hepatone)	541-85-5	25 ppm	38 ppm	——	——
Ethyl benzene	100-41-4	100 ppm	125 ppm	——	——
Ethyl bromide	74-96-4	200 ppm	250 ppm	——	——
Ethyl butyl ketone (3-Heptanone)	106-35-4	50 ppm	75 ppm	——	——
Ethyl chloride	75-00-3	1,000 ppm	1,250 ppm	——	——
Ethylene	74-85-1	Simple asphyxiant	——	——	——
Ethylene chlorohydrin (2-Chloroethanol)	107-07-3	——	——	1 ppm	X
Ethylenediamine (1,2-Diaminoethane)	107-15-3	10 ppm	20 ppm	——	X
Ethylene dibromide	106-93-4	0.1 ppm	0.5 ppm	——	——
Ethylene dichloride (1,2-Dichloroethane)	107-06-2	1 ppm	2 ppm	——	——
Ethylene glycol	107-21-1	——	——	50 ppm	——
Ethylene glycol dinitrate	628-96-6	——	0.1 mg/m^3	——	X
Ethylene glycol monomethyl ether acetate (Methyl cellosolve acetate)	——	5 ppm	10 ppm	——	X
Ethyleneimine	151-56-4	——	——	——	X
Ethylene oxide	75-21-8	1 ppm	5 ppm	——	——
Ethyl ether (Diethyl ether)	60-29-7	400 ppm	500 ppm	——	——
Ethyl formate	109-94-4	100 ppm	125 ppm	——	——
Ethylidine chloride (1, 1-Dichloroethane)	107-06-2	1 ppm	2 ppm	——	——
Ethylidene norbornene	16219-75-3	——	——	5.0 ppm	——
Ethyl mercaptan (Ethanethiol)	75-08-1	0.5 ppm	1.5 ppm	——	——
n-Ethylmorpholine	100-74-3	5 ppm	10 ppm	——	X
Ethyl sec-amyl ketone (5-methyl-3-heptanone)	541-85-5	25 ppm	38 ppm	——	——
Ethyl silicate	78-10-4	10 ppm	20 ppm	——	——
Fenamiphos	22224-92-6	0.1 mg/m^3	0.3 mg/m^3	——	X
Fensulfothion (Dasanit)	115-90-2	0.1 mg/m^3	0.3 mg/m^3	——	——
Fenthion	55-38-9	0.2 mg/m^3	0.6 mg/m^3	——	X
Ferbam	——	——	——	——	——
Total particulate	14484-64-1	10 mg/m^3	20 mg/m^3	——	——
Ferrovanadium dust	12604-58-9	1 mg/m^3	3 mg/m^3	——	——
Fluorides (as F)	Varies with compound	2.5 mg/m^3	5 mg/m^3	——	——
Fluorine	7782-41-4	0.1 ppm	0.3 ppm	——	——
Fluorotrichloromethane (see Trichlorofluoro methane)	75-69-4	——	——	1,000 ppm	——
Fonofos	944-22-9	0.1 mg/m^3	0.3 mg/m^3	——	X
Formaldehyde	50-00-0	0.75 ppm	2 ppm	——	——
Formamide	75-12-7	20 ppm	30 ppm	——	——
Formic acid	64-18-6	5 ppm	10 ppm	——	——
Furadon (carbofuran)	1563-66-2	0.1 mg/m^3	0.3 mg/m^3	——	——
Furfural	98-01-1	2 ppm	4 ppm	——	X

Substance	CAS	TWA_8	STEL	Ceiling	Skin
Furfuryl alcohol	98-00-0	10 ppm	15 ppm	——	X
Gasoline	8006-61-9	300 ppm	500 ppm	——	——
Germanium tetrahydride	7782-65-2	0.2 ppm	0.6 ppm	——	——
Glass, fibrous or dust	——	10 mg/m^3	20 mg/m^3	——	——
Gluteraldehyde	111-30-8	——	——	0.2 ppm	——
Glycerin mist	56-81-5	——	——	——	——
Total particulate	——	10 mg/m^3	20 mg/m^3	——	——
Respirable fraction	——	5 mg/m^3	10 mg/m^3	——	——
Glycidol (2, 3-Epoxy-1-propanol)	556-52-5	25 ppm	38 ppm	——	——
Glycol monoethyl ether (2-Ethoxyethanol)	110-80-5	5 ppm	10 ppm	——	X
Grain dust (oat, wheat, barley)	——	10 mg/m^3	20 mg/m^3	——	——
Graphite, natural	7782-42-5	——	——	——	——
Respirable particulate	——	2.5 mg/m^3	5 mg/m^3	——	——
Graphite, synthetic	——	——	——	——	——
Total particulate	——	10 mg/m^3	20 mg/m^3	——	——
Respirable fraction	——	5 mg/m^3	10 mg/m^3	——	——
Guthion (Azinphosmethyl)	86-50-0	0.2 mg/m^3	0.6 mg/m^3	——	X
Gypsum	13397-24-5	——	——	——	——
Total particulate	——	10 mg/m^3	20 mg/m^3	——	——
Respirable fraction	——	5 mg/m^3	10 mg/m^3	——	——
Hafnium	7440-58-6	0.5 mg/m^3	1.5 mg/m^3	——	——
Helium	——	Simple asphyxiant	——	——	——
Heptachlor	76-44-8	0.5 mg/m^3	1.5 mg/m^3	——	X
Heptane (n-heptane)	142-82-5	400 ppm	500 ppm	——	——
2-Heptanone (Methyl n-amyl ketone)	110-43-0	50 ppm	75 ppm	——	——
3-Heptanone (Ethyl butyl ketone)	106-35-4	50 ppm	75 ppm	——	——
Hexachlorobutadiene	87-68-3	0.02 ppm	0.06 ppm	——	X
Hexachlorocyclopentadiene	77-47-4	0.01 ppm	0.03 ppm	——	——
Hexachloroethane	67-72-1	1 ppm	3 ppm	——	X
Hexachloronaphthalene	1335-87-1	0.2 mg/m^3	0.6 mg/m^3	——	X
Hexafluoroacetone	684-16-2	0.1 ppm	0.3 ppm	——	X
Hexane	——	——	——	——	——
n-hexane	110-54-3	50 ppm	75 ppm	——	——
other isomers	Varies with compound	500 ppm	1,000 ppm	——	——
2-Hexanone (Methyl-n-butyl ketone)	591-78-6	5 ppm	10 ppm	——	——
Hexone (Methyl isobutyl ketone)	108-10-1	50 ppm	75 ppm	——	——
sec-Hexyl acetate	108-84-9	50 ppm	75 ppm	——	——
Hexylene glycol	107-41-5	——	——	25 ppm	——
Hydrazine	302-01-2	0.1 ppm	0.3 ppm	——	X
Hydrogen	——	Simple asphyxiant	——	——	——
Hydrogenated terphenyls	61788-32-7	0.5 ppm	1.5 ppm	——	——
Hydrogen bromide	10035-10-6	——	——	3.0 ppm	——
Hydrogen chloride	7647-01-0	——	——	5.0 ppm	——
Hydrogen cyanide	74-90-8	——	4.7 ppm	——	X
Hydrogen fluoride	7664-39-3	——	——	3 ppm	——
Hydrogen peroxide	7722-84-1	1 ppm	3 ppm	——	——
Hydrogen selenide (as Se)	7783-07-5	0.05 ppm	0.15 ppm	——	——
Hydrogen sulfide	7783-06-4	10 ppm	15 ppm	——	——
Hydroquinone (Dihydroxybenzene)	123-31-9	2 mg/m^3	4 mg/m^3	——	——

Substance	CAS	TWA_8	STEL	Ceiling	Skin
4-Hydroxy-4-methyl-2-pentanone (Diacetone alcohol)	123-42-2	50 ppm	75 ppm	——	——
2-Hydroxypropyl acrylate	99-61-1	0.5 ppm	1.5 ppm	——	X
Indene	95-13-6	10 ppm	20 ppm	——	——
Indium and compounds (as In)	7440-74-6	0.1 mg/m^3	0.3 mg/m^3	——	——
Iodine	7553-56-2	——	——	0.1 ppm	——
Iodoform	75-47-8	0.6 ppm	1.8 ppm	——	——
Iron oxide dust and fume (as Fe)	1309-37-1	——	——	——	——
Total particulate	——	5 mg/m^3	10 mg/m^3	——	——
Iron pentacarbonyl (as Fe)	13463-40-6	0.1 ppm	0.2 ppm	——	——
Iron salts, soluble (as Fe)	Varies with compound	1 mg/m^3	3 mg/m^3	——	——
Isoamyl acetate	123-92-2	100 ppm	150 ppm	——	——
Isoamyl alcohol (primary and secondary)	123-51-3	100 ppm	125 ppm	——	——
Isobutyl acetate	110-19-0	150 ppm	188 ppm	——	——
Isobutyl alcohol	78-83-1	50 ppm	75 ppm	——	——
Isooctyl alcohol	26952-21-6	50 ppm	75 ppm	——	X
Isophorone	78-59-1	4 ppm	——	5 ppm	——
Isophorone diisocyanate	4098-71-9	0.005 ppm	0.02 ppm	——	X
Isopropoxyethanol	109-59-1	25 ppm	38 ppm	——	——
Isopropyl acetate	108-21-4	250 ppm	310 ppm	——	——
Isopropyl alcohol	67-63-0	400 ppm	500 ppm	——	——
Isopropylamine	75-31-0	5 ppm	10 ppm	——	——
N-Isopropylaniline	768-52-5	2 ppm	4 ppm	——	X
Isopropyl ether	108-20-3	250 ppm	313 ppm	——	——
Isopropyl glycidyl ether (IGE)	4016-14-2	50 ppm	75 ppm	——	——
Kaolin	——	——	——	——	——
Total particulate	——	10 mg/m^3	20 mg/m^3	——	——
Respirable fraction	——	5 mg/m^3	10 mg/m^3	——	——
Ketene	463-51-4	0.5 mg/m^3	1.5 mg/m^3	——	——
Lannate (Methomyl)	16752-77-5	2.5 mg/m^3	5 mg/m^3	——	——
Lead, inorganic (as Pb)	7439-92-1	0.05 mg/m^3	——	——	——
Lead arsenate (as Pb)	3687-31-8	0.05 mg/m^3	——	——	——
Lead chromate (as Pb)	7758-97-6	0.05 mg/m^3	——	——	——
Limestone	1317-65-3	——	——	——	——
Total particulate	——	10 mg/m^3	20 mg/m^3	——	——
Respirable fraction	——	5 mg/m^3	10 mg/m^3	——	——
Lindane	58-89-9	0.5 mg/m^3	1.5 mg/m^3	——	X
Lithium hydride	7580-67-8	0.025 mg/m^3	0.075 mg/m^3	——	——
L.P.G. (liquified petroleum gas)	68476-85-7	1,000 ppm	1,250 ppm	——	——
Magnesite	546-93-0	——	——	——	——
Total particulate	——	10 mg/m^3	20 mg/m^3	——	——
Respirable fraction	——	5 mg/m^3	10 mg/m^3	——	——
Magnesium oxide fume	1309-48-4	——	——	——	——
Total particulate	——	10 mg/m^3	20 mg/m^3	——	——
Malathion	121-75-5	——	——	——	——
Total particulate	——	10 mg/m^3	20 mg/m^3	——	X
Maleic anhydride	108-31-6	0.25 ppm	0.75 ppm	——	——
Manganese and compounds (as Mn)	7439-96-5	——	——	5 mg/m^3	——
Manganese cyclopentadienyl tricarbonyl (as Mn)	12079-65-1	0.1 mg/m^3	0.3 mg/m^3	——	X

Substance	CAS	TWA_8	STEL	Ceiling	Skin
Manganese tetroxide and fume (as Mn)	7439-96-5	1 mg/m^3	3 mg/m^3	——	——
Marble	1317-65-3	——	——	——	——
Total particulate	——	10 mg/m^3	20 mg/m^3	——	——
Respirable fraction	——	5 mg/m^3	10 mg/m^3	——	——
MBOCA (4, 4'-Methylene bis (2-chloro-aniline))	101-14-4	——	——	——	X
MDA (4, 4-Methylene dianiline)	101-77-9	0.01 ppm	0.1 ppm	——	X
MDI (Methylene bisphenyl isocyanate) (Diphenylmethane diisocyanate)	101-68-8	——	——	0.02 ppm	——
MEK (Methyl ethyl ketone) (2-Butanone)	78-93-3	200 ppm	300 ppm	——	——
MEKP (Methyl ethyl ketone peroxide)	1338-23-4	——	——	0.2 ppm	——
Mercury (as Hg)	7439-97-6	——	——	——	——
Aryl and inorganic	——	0.1 mg/m^3	0.3 mg/m^3	——	X
Organo-alkyl compounds	——	0.01 mg/m^3	0.03 mg/m^3	——	X
Vapor	——	0.05 mg/m^3	0.15 mg/m^3	——	X
Mesityl oxide	141-79-7	15 ppm	25 ppm	——	——
Methacrylic acid	79-41-4	20 ppm	30 ppm	——	X
Methane	——	Simple asphyxiant	——	——	——
Methanethiol (Methyl mercaptan)	74-93-1	0.5 ppm	1.5 ppm	——	——
Methanol (Methyl alcohol)	67-56-1	200 ppm	250 ppm	——	X
Methomyl (lannate)	16752-77-5	2.5 mg/m^3	5 mg/m^3	——	——
Methoxychlor	72-43-5	——	——	——	——
Total particulate	——	10 mg/m^3	20 mg/m^3	——	——
2-Methoxyethanol (Methyl cellosolve)	109-86-4	5 ppm	10 ppm	——	X
2-Methoxyethyl acetate (Methyl cellosolve acetate)	110-49-6	5 ppm	10 ppm	——	X
4-Methoxyphenol	150-76-5	5 mg/m^3	10 mg/m^3	——	——
Methyl acetate	79-20-9	200 ppm	250 ppm	——	——
Methyl acetylene (propyne)	74-99-7	1,000 ppm	1,250 ppm	——	——
Methyl acetylene-propadiene mixture (MAPP)	——	1,000 ppm	1,250 ppm	——	——
Methyl acrylate	96-33-3	10 ppm	20 ppm	——	X
Methylacrylonitrile	126-98-7	1 ppm	3 ppm	——	X
Methylal (Dimethoxy-methane)	109-87-5	1,000 ppm	1,250 ppm	——	——
Methyl alcohol (methanol)	67-56-1	200 ppm	250 ppm	——	X
Methylamine	74-89-5	10 ppm	20 ppm	——	——
Methyl amyl alcohol (Methyl isobutyl carbinol)	108-11-2	25 ppm	40 ppm	——	X
Methyl n-amyl ketone (2-Heptanone)	110-43-0	50 ppm	75 ppm	——	——
N-Methyl aniline (Monomethyl aniline)	100-61-8	0.5 ppm	1.5 ppm	——	X
Methyl bromide	74-83-9	5 ppm	10 ppm	——	X
Methyl-n-butyl ketone (2-Hexanone)	591-78-6	5 ppm	10 ppm	——	——
Methyl cellosolve (2-Methoxyethanol)	109-86-4	5 ppm	10 ppm	——	X
Methyl cellosolve acetate (2-Methoxyethyl acetate)	110-49-6	5 ppm	10 ppm	——	X
Methyl chloride	74-87-3	50 ppm	100 ppm	——	——
Methyl chloroform (1, 1, 1-trichlorethane)	71-55-6	350 ppm	450 ppm	——	——
Methyl chloromethyl ether (chloromethyl methyl ether)	107-30-2	——	——	——	——

Substance	CAS	TWA_8	STEL	Ceiling	Skin
Methyl 2-cyanoacrylate	137-05-3	2 ppm	4 ppm	——	——
Methylcyclohexane	108-87-2	400 ppm	500 ppm	——	——
Methylcyclohexanol	25639-42-3	50 ppm	75 ppm	——	——
Methylcyclohexanone	583-60-8	50 ppm	75 ppm	——	X
Methylcyclopentadienyl manganese tricarbonyl (as Mn)	12108-13-3	0.2 mg/m^3	0.6 mg/m^3	——	X
Methyl demeton	8022-00-2	0.5 mg/m^3	1.5 mg/m^3	——	X
Methylene bisphenyl isocyanate (MDI) (Diphenylmethane diisocyanate)	101-68-8	——	——	0.02 ppm	——
4, 4'-Methylene bis (2-chloro-aniline) (MBOCA)	101-14-4	——	——	——	X
Methylene bis (4-cyclohexylisocyanate)	5124-30-1	——	——	0.01 ppm	——
Methylene chloride (Dichloromethane)	75-09-2	25 ppm	125 ppm	——	——
4, 4-Methylene dianiline (MDA)	101-77-9	0.01 ppm	0.1 ppm	——	X
Methyl ethyl ketone (MEK) (2-Butanone)	78-93-3	200 ppm	300 ppm	——	——
Methyl ethyl ketone peroxide (MEKP)	1338-23-4	——	——	0.2 ppm	——
Methyl formate	107-31-3	100 ppm	150 ppm	——	——
5-Methyl-3-heptanone (Ethyl amyl ketone)	541-85-5	25 ppm	38 ppm	——	——
Methyl hydrazine (Monomethyl hydrazine)	60-34-4	——	——	0.2 ppm	X
Methyl iodide	74-88-4	2 ppm	4 ppm	——	X
Methyl isoamyl ketone	110-12-3	50 ppm	75 ppm	——	——
Methyl isobutyl carbinol (Methyl amyl alcohol)	108-11-2	25 ppm	40 ppm	——	X
Methyl isobutyl ketone (Hexone)	108-10-1	50 ppm	75 ppm	——	——
Methyl isocyanate	624-83-9	0.02 ppm	0.06 ppm	——	X
Methyl isopropyl ketone	563-80-4	200 ppm	250 ppm	——	——
Methyl mercaptan (Methanethiol)	74-93-1	0.5 ppm	1.5 ppm	——	——
Methyl methacrylate	80-62-6	100 ppm	150 ppm	——	——
Methyl parathion	298-00-0	0.2 mg/m^3	0.6 mg/m^3	——	X
Methyl propyl ketone (2-Pentanone)	107-87-9	200 ppm	250 ppm	——	——
Methyl silicate	684-84-5	1 ppm	3 ppm	——	——
alpha-Methyl styrene	98-83-9	50 ppm	100 ppm	——	——
Mevinphos (Phosdrin)	7786-34-7	0.01 ppm	0.03 ppm	——	X
Metribuzin	21087-64-9	5 mg/m^3	10 mg/m^3	——	——
Mica (Silicates) Respirable fraction	12001-26-2	3 mg/m^3	6 mg/m^3	——	——
Molybdenum (as Mo)	7439-98-7	——	——	——	——
Soluble compounds	——	5 mg/m^3	10 mg/m^3	——	——
Insoluble compounds	——	10 mg/m^3	20 mg/m^3	——	——
Monochlorobenzene (Chlorobenzene)	108-90-7	75 ppm	113 ppm	——	——
Monocrotophos (Azodrin)	6923-22-4	0.25 mg/m^3	0.75 mg/m^3	——	——
Monomethyl aniline (N-Methyl aniline)	100-61-8	0.5 ppm	1.5 ppm	——	X
Monomethyl hydrazine	——	——	——	0.2 ppm	——
Morpholine	110-91-8	20 ppm	30 ppm	——	X
Naled (Dibrom)	300-76-5	3 mg/m^3	6 mg/m^3	——	X
Naphtha	8030-30-6	100 ppm	150 ppm	——	X
Naphthalene	91-20-3	10 ppm	15 ppm	——	——
alpha-Naphthylamine	134-32-7	——	——	——	——
beta-Naphthylamine	91-59-8	——	——	——	——
Neon	7440-01-9	Simple asphyxiant	——	——	——

Substance	CAS	TWA_8	STEL	Ceiling	Skin
Nickel carbonyl (as Ni)	13463-39-3	0.001 ppm	0.003 ppm	——	——
Nickel (as Ni)	7440-02-0	——	——	——	——
Metal and insoluble compounds	——	1 mg/m^3	3 mg/m^3	——	——
Soluble compounds	——	0.1 mg/m^3	0.3 mg/m^3	——	——
Nicotine	54-11-5	0.5 mg/m^3	1.5 mg/m^3	——	X
Nitrapyrin (2-Chloro-6 trichloromethyl pyridine)	1929-82-4	——	——	——	——
Total particulate	——	10 mg/m^3	20 mg/m^3	——	——
Respirable fraction	——	5 mg/m^3	10 mg/m^3	——	——
Nitric acid	7697-37-2	2 ppm	4 ppm	——	——
Nitric oxide	10102-43-9	25 ppm	38 ppm	——	——
p-Nitroaniline	100-01-6	3 mg/m^3	6 mg/m^3	——	X
Nitrobenzene	98-95-3	1 ppm	3 ppm	——	X
4-Nitrobiphenyl	92-93-3	——	——	——	——
p-Nitrochlorobenzene	100-00-5	0.5 mg/m^3	1.5 mg/m^3	——	X
4-Nitrodiphenyl	——	——	——	——	——
Nitroethane	79-24-3	100 ppm	150 ppm	——	——
Nitrogen	7727-37-9	Simple asphyxiant	——	——	——
Nitrogen dioxide	10102-44-0	——	1 ppm	——	——
Nitrogen oxide (Nitrous oxide)	10024-97-2	50 ppm	75 ppm	——	——
Nitrogen trifluoride	7783-54-2	10 ppm	20 ppm	——	——
Nitroglycerin	55-63-0	——	0.1 mg/m^3	——	X
Nitromethane	75-52-5	100 ppm	150 ppm	——	——
1-Nitropropane	108-03-2	25 ppm	38 ppm	——	——
2-Nitropropane	79-46-9	10 ppm	20 ppm	——	——
N-Nitrosodimethylamine	62-75-9	——	——	——	——
Nitrotoluene	——	——	——	——	——
o-isomer	88-72-2	2 ppm	4 ppm	——	X
m-isomer	98-08-2	2 ppm	4 ppm	——	X
p-isomer	99-99-0	2 ppm	4 ppm	——	X
Nitrotrichloromethane (Chloropicrin)	76-06-2	0.1 ppm	0.3 ppm	——	——
Nitrous oxide (Nitrogen oxide)	10024-97-2	50 ppm	75 ppm	——	——
Nonane	111-84-2	200 ppm	250 ppm	——	——
Octachloronaphthalene	2234-13-1	0.1 mg/m^3	0.3 mg/m^3	——	X
Octane	111-65-9	300 ppm	375 ppm	——	——
Oil mist mineral (particulate)	8012-95-1	5 mg/m^3	10 mg/m^3	——	——
Osmium tetroxide (as Os)	20816-12-0	0.0002 ppm	0.0006 ppm	——	——
Oxalic acid	144-62-7	1 mg/m^3	2 mg/m^3	——	——
Oxygen difluoride	7783-41-7	——	——	0.05 ppm	——
Ozone	10028-15-6	0.1 ppm	0.3 ppm	——	——
Paper fiber (Cellulose)	9004-34-6	——	——	——	——
Total particulate	——	10 mg/m^3	20 mg/m^3	——	——
Respirable fraction	——	5 mg/m^3	10 mg/m^3	——	——
Paraffin wax fume	8002-74-2	2 mg/m^3	4 mg/m^3	——	——
Paraquat	——	——	——	——	——
Respirable fraction	4685-14-7 1910-42-5 2074-50-2	0.1 mg/m^3	0.3 mg/m^3	——	X
Parathion	56-38-2	0.1 mg/m^3	0.3 mg/m^3	——	X

Substance	CAS	TWA_8	STEL	Ceiling	Skin
Particulate polycyclic aromatic hydrocarbons (benzene soluble fraction) (coal tar pitch volatiles)	65996-93-2	0.2 mg/m^3	0.6 mg/m^3	——	——
Particulates not otherwise regulated	——	——	——	——	——
Total particulate	——	10 mg/m^3	20 mg/m^3	——	——
Respirable fraction	——	5 mg/m^3	10 mg/m^3	——	——
Pentaborane	19624-22-7	0.005 ppm	0.015 ppm	——	——
Pentachloronaphthalene	1321-64-8	0.5 mg/m^3	1.5 mg/m^3	——	X
Pentachlorophenol	87-86-5	0.5 mg/m^3	1.5 mg/m^3	——	X
Pentaerythritol	115-77-5	——	——	——	——
Total particulate	——	10 mg/m^3	20 mg/m^3	——	——
Respirable fraction	——	5 mg/m^3	10 mg/m^3	——	——
Pentane	109-66-0	600 ppm	750 ppm	——	——
2-Pentanone (methyl propyl ketone)	107-87-9	200 ppm	250 ppm	——	——
Perchloroethylene (tetrachloroethylene)	127-18-4	25 ppm	38 ppm	——	——
Perchloromethyl mercaptan	594-42-3	0.1 ppm	0.3 ppm	——	——
Perchloryl fluoride	7616-94-6	3 ppm	6 ppm	——	——
Perlite	——	——	——	——	——
Total particulate	——	10 mg/m^3	20 mg/m^3	——	——
Respirable fraction	——	5 mg/m^3	10 mg/m^3	——	——
Petroleum distillates (Naptha, rubber solvent)	——	100 ppm	150 ppm	——	——
Phenacyl chloride (a-Chloroacetophenone)	532-21-4	0.05 ppm	0.15 ppm	——	——
Phenol	108-95-2	5 ppm	10 ppm	——	X
Phenothiazine	92-84-2	5 mg/m^3	10 mg/m^3	——	X
p-Phenylene diamine	106-50-3	0.1 mg/m^3	0.3 mg/m^3	——	X
Phenyl ether (vapor)	101-84-8	1 ppm	3 ppm	——	——
Phenyl ether-diphenyl mixture (vapor)	——	1 ppm	3 ppm	——	——
Phenylethylene (Styrene)	100-42-5	50 ppm	100 ppm	——	——
Phenyl glycidyl ether (PGE)	122-60-1	1 ppm	3 ppm	——	——
Phenylhydrazine	100-63-0	5 ppm	10 ppm	——	X
Phenyl mercaptan	108-98-5	0.5 ppm	1.5 ppm	——	——
Phenylphosphine	638-21-1	——	——	0.05 ppm	——
Phorate	298-02-2	0.05 mg/m^3	0.2 mg/m^3	——	X
Phosdrin (Mevinphos)	7786-34-7	0.01 ppm	0.03 ppm	——	X
Phosgene (carbonyl chloride)	75-44-5	0.1 ppm	0.3 ppm	——	——
Phosphine	7803-51-2	0.3 ppm	1 ppm	——	——
Phosphoric acid	7664-38-2	1 mg/m^3	3 mg/m^3	——	——
Phosphorus (yellow)	7723-14-0	0.1 mg/m^3	0.3 mg/m^3	——	——
Phosphorous oxychloride	10025-87-3	0.1 ppm	0.3 ppm	——	——
Phosphorus pentachloride	10026-13-8	0.1 ppm	0.3 ppm	——	——
Phosphorus pentasulfide	1314-80-3	1 mg/m^3	3 mg/m^3	——	——
Phosphorus trichloride	12-2-19	0.2 ppm	0.5 ppm	——	——
Phthalic anhydride	85-44-9	1 ppm	3 ppm	——	——
m-Phthalodinitrile	626-17-5	5 mg/m^3	10 mg/m^3	——	——
Picloram	1918-02-1	——	——	——	——
Total particulate	——	10 mg/m^3	20 mg/m^3	——	——
Respirable fraction	——	5 mg/m^3	10 mg/m^3	——	——
Picric acid (2, 4, 6-Trinitrophenol)	88-89-1	0.1 mg/m^3	0.3 mg/m^3	——	X

Substance	CAS	TWA_8	STEL	Ceiling	Skin
Pindone (2-Pivalyl-1, 3-indandione, Pival)	83-26-1	0.1 mg/m^3	0.3 mg/m^3	——	——
Piperazine dihydrochloride	142-64-3	5 mg/m^3	10 mg/m^3	——	——
Pival (Pindone)	83-26-1	0.1 mg/m^3	0.3 mg/m^3	——	——
Plaster of Paris	26499-65-0	——	——	——	——
Total particulate	——	10 mg/m^3	20 mg/m^3	——	——
Respirable fraction	——	5 mg/m^3	10 mg/m^3	——	——
Platinum (as Pt)	7440-06-4	——	——	——	——
Metal	——	1 mg/m^3	3 mg/m^3	——	——
Soluble salts	——	0.002 mg/m^3	0.006 mg/m^3	——	——
Polychlorobiphenyls (Chlorodiphenyls)	——	——	——	——	——
42% Chlorine (PCB)	53469-21-9	1 mg/m^3	3 mg/m^3	——	X
54% Chlorine (PCB)	11097-69-1	0.5 mg/m^3	1.5 mg/m^3	——	X
Portland cement	65997-15-1	——	——	——	——
Total particulate	——	10 mg/m^3	20 mg/m^3	——	——
Respirable fraction	——	5 mg/m^3	10 mg/m^3	——	——
Potassium hydroxide	1310-58-3	——	——	2 mg/m^3	——
Propane	74-98-6	1,000 ppm	1,250 ppm	——	——
Propargyl alcohol	107-19-7	1 ppm	3 ppm	——	X
beta-Propiolactone	57-57-8	——	——	——	——
Propionic acid	79-09-4	10 ppm	20 ppm	——	——
Propoxur (Baygon)	114-26-1	0.5 mg/m^3	1.5 mg/m^3	——	——
n-Propyl acetate	109-60-4	200 ppm	250 ppm	——	——
n-Propyl alcohol	71-23-8	200 ppm	250 ppm	——	X
n-Propyl nitrate	627-13-4	25 ppm	40 ppm	——	——
Propylene	——	Simple asphyxiant	——	——	——
Propylene dichloride (1, 2-Dichloropropane)	78-87-5	75 ppm	110 ppm	——	——
Propylene glycol dinitrate	6423-43-4	0.05 ppm	0.15 ppm	——	X
Propylene glycol monomethyl ether	107-98-2	100 ppm	150 ppm	——	——
Propylene imine	75-55-8	2 ppm	4 ppm	——	X
Propylene oxide (1,2-Epoxypropane)	75-56-9	20 ppm	30 ppm	——	——
Propyne (Methyl acetylene)	74-99-7	1,000 ppm	1,250 ppm	——	——
Pyrethrum	8003-34-7	5 mg/m^3	10 mg/m^3	——	——
Pyridine	110-86-1	5 ppm	10 ppm	——	——
Pyrocatachol (Catechol)	120-80-9	5 ppm	10 ppm	——	X
Quinone (p-Benzoquinone)	106-51-4	0.1 ppm	0.3 ppm	——	——
RDX (Cyclonite)	——	1.5 mg/m^3	3 mg/m^3	——	X
Resorcinol	108-46-3	10 ppm	20 ppm	——	——
Rhodium (as Rh)	7440-16-6	——	——	——	——
Insoluble compounds, metal fumes and dusts	——	0.1 mg/m^3	0.3 mg/m^3	——	——
Soluble compounds, salts	——	0.001 mg/m^3	0.003 mg/m^3	——	——
Ronnel	299-84-3	10 mg/m^3	20 mg/m^3	——	——
Rosin core solder, pyrolysis products (as formaldehyde)	8050-09-7	0.1 mg/m^3	0.3 mg/m^3	——	——
Rotenone	83-79-4	5 mg/m^3	10 mg/m^3	——	——
Rouge	——	——	——	——	——
Total particulate	——	10 mg/m^3	20 mg/m^3	——	——
Respirable fraction	——	5 mg/m^3	10 mg/m^3	——	——

Substance	CAS	TWA_8	STEL	Ceiling	Skin
Rubber solvent (naphtha)	8030-30-6	100 ppm	150 ppm	——	——
Selenium compounds (as Se)	7782-49-2	0.2 mg/m^3	0.6 mg/m^3	——	——
Selenium hexafluoride (as Se)	7783-79-1	0.05 ppm	0.15 ppm	——	——
Sesone (Crag herbicide)	136-78-7	——	——	——	——
Total particulate	——	10 mg/m^3	20 mg/m^3	——	——
Respirable fraction	——	5 mg/m^3	10 mg/m^3	——	——
Sevin (Carbaryl)	63-25-2	5 mg/m^3	10 mg/m^3	——	——
Silane (see Silicon tetrahydride)	7803-62-5	5 ppm	10 ppm	——	——
Silica, amorphous, precipitated and gel	112926-00-8	6 mg/m^3	12 mg/m^3	——	——
Silica, amorphous, diatomaceous earth, containing less than 1% crystalline silica	61790-53-2	——	——	——	——
Total particulate	——	6 mg/m^3	12 mg/m^3	——	——
Respirable fraction	——	3 mg/m^3	6 mg/m^3	——	——
Silica, crystalline cristobalite	——	——	——	——	——
Respirable fraction	14464-46-1	0.05 mg/m^3	0.15 mg/m3	——	——
Silica, crystalline quartz	——	——	——	——	——
Respirable fraction	14808-60-7	0.1 mg/m^3	0.3 mg/m^3	——	——
Silica, crystalline tripoli (as quartz)	——	——	——	——	——
Respirable fraction	1317-95-9	0.1 mg/m^3	0.3 mg/m^3	——	——
Silica, crystalline tridymite	——	——	——	——	——
Respirable fraction	15468-32-3	0.05 mg/m^3	0.15 mg/m^3	——	——
Silica, fused	——	——	——	——	——
Respirable fraction	60676-86-0	0.1 mg/m^3	0.3 mg/m^3	——	——
Silicates (less than 1% crystalline silica)	——	——	——	——	——
Mica	——	——	——	——	——
Respirable fraction	12001-26-2	3 mg/m^3	6 mg/m^3	——	——
Soapstone	——	——	——	——	——
Total particulate	——	6 mg/m^3	12 mg/m^3	——	——
Respirable fraction	——	3 mg/m^3	6 mg/m^3	——	——
Talc (containing asbestos)	——	——	——	——	——
Talc (containing no asbestos)	——	——	——	——	——
Respirable fraction	14807-96-6	2 mg/m^3	4 mg/m^3	——	——
Tremolite	——	——	——	——	——
Silicon	7440-21-3	——	——	——	——
Total particulate	——	10 mg/m^3	20 mg/m^3	——	——
Respirable fraction	——	5 mg/m^3	10 mg/m^3	——	——
Silicon carbide	409-21-2	——	——	——	——
Total particulate	——	10 mg/m^3	20 mg/m^3	——	——
Respirable fraction	——	5 mg/m^3	10 mg/m^3	——	——
Silicon tetrahydride (Silane)	7803-62-5	5 ppm	10 ppm	——	——
Silver, metal dust and soluble compounds (as Ag)	7440-22-4	0.01 mg/m^3	0.03 mg/m^3	——	——
Soapstone	——	——	——	——	——
Total particulate	——	6 mg/m^3	12 mg/m^3	——	——
Respirable fraction	——	3 mg/m^3	6 mg/m^3	——	——
Sodium azide (as HN3 or NaN3)	26628-22-8	——	——	0.1 ppm	X
Sodium bisulfite	7631-90-5	5 mg/m^3	10 mg/m^3	——	——
Sodium-2, 4-dichloro-phenoxyethyl sulfate (Crag herbicide)	136-78-7	——	——	——	——

Substance	CAS	TWA_8	STEL	Ceiling	Skin
Total particulate	——	10 mg/m^3	20 mg/m^3	——	——
Respirable fraction	——	5 mg/m^3	10 mg/m^3	——	——
Sodium fluoroacetate	62-74-8	0.05 mg/m^3	0.15 mg/m^3	——	X
Sodium hydroxide	1310-73-2	——	——	2 mg/m^3	——
Sodium metabisulfite	7681-57-4	5 mg/m^3	10 mg/m^3	——	——
Starch	9005-25-8	——	——	——	——
Total particulate	——	10 mg/m^3	20 mg/m^3	——	——
Respirable fraction	——	5 mg/m^3	10 mg/m^3	——	——
Stibine	7803-52-3	0.1 ppm	0.3 ppm	——	——
Stoddard solvent	8052-41-3	100 ppm	150 ppm	——	——
Strychnine	57-24-9	0.15 mg/m^3	0.45 mg/m^3	——	——
Styrene (Phenylethylene, Vinyl benzene)	100-42-5	50 ppm	100 ppm	——	——
Subtilisins	9014-01-1	——	0.00006 mg/m^3 (60 min.)	——	——
Sucrose	57-50-1	——	——	——	——
Total particulate	——	10 mg/m^3	20 mg/m^3	——	——
Respirable fraction	——	5 mg/m^3	10 mg/m^3	——	——
Sulfotep (TEDP)	3689-24-5	0.2 mg/m^3	0.6 mg/m^3	——	X
Sulfur dioxide	7446-09-5	2 ppm	5 ppm	——	——
Sulfur hexafluoride	2551-62-4	1,000 ppm	1,250 ppm	——	——
Sulfuric acid	7664-93-9	1 mg/m^3	3 mg/m^3	——	——
Sulfur monochloride	10025-67-9	——	——	1 ppm	——
Sulfur pentafluoride	5714-22-1	——	——	0.01 ppm	——
Sulfur tetrafluoride	7783-60-0	——	——	0.1 ppm	——
Sulfuryl fluoride	2699-79-8	5 ppm	10 ppm	——	——
Sulprofos	35400-43-2	1 mg/m^3	3 mg/m^3	——	——
Systox (Demeton)	8065-48-3	0.01 ppm	0.03 ppm	——	X
2, 4, 5-T	93-76-5	10 mg/m^3	20 mg/m^3	——	——
Talc (containing asbestos)	——	——	——	——	——
Talc (containing no asbestos)	——	——	——	——	——
Respirable fraction	14807-96-6	2 mg/m^3	4 mg/m^3	——	——
Tantalum	——	——	——	——	——
Metal and oxide dusts	7440-25-7	5 mg/m^3	10 mg/m^3	——	——
TDI (Toluene-2, 4-diisocyanate)	584-84-9	0.005 ppm	0.02 ppm	——	——
TEDP (Sulfotep)	3689-24-5	0.2 mg/m^3	0.6 mg/m^3	——	X
Tellurium and compounds (as Te)	13494-80-9	0.1 mg/m^3	0.3 mg/m^3	——	——
Tellurium hexafluoride (as Te)	7783-80-4	0.02 ppm	0.06 ppm	——	——
Temephos (Abate)	3383-96-8	——	——	——	——
Total particulate	——	10 mg/m^3	20 mg/m^3	——	——
Respirable fraction	——	5 mg/m^3	10 mg/m^3	——	——
TEPP	107-49-3	0.004 ppm	0.012 ppm	——	X
Terphenyls	26140-60-3	——	——	0.5 ppm	——
1, 1, 1, 2-Tetrachloro-2, 2-difluoroethane	76-11-0	500 ppm	625 ppm	——	——
1, 1, 2, 2-Tetrachloro-1, 2-difluoroethane	76-12-0	500 ppm	625 ppm	——	——
1, 1, 2, 2-Tetrachloroethane	79-34-5	1 ppm	3 ppm	——	X
Tetrachloroethylene (Perchloroethylene)	127-18-4	25 ppm	38 ppm	——	——

Substance	CAS	TWA_8	STEL	Ceiling	Skin
Tetrachloromethane (Carbon tetrachloride)	56-23-5	2 ppm	4 ppm	——	X
Tetrachloronaphthalene	1335-88-2	2 mg/m^3	4 mg/m^3	——	X
Tetraethyl lead (as Pb)	78-00-2	0.075 mg/m^3	0.225 mg/m^3	——	X
Tetrahydrofuran	109-99-9	200 ppm	250 ppm	——	——
Tetramethyl lead (as Pb)	75-74-1	0.075 mg/m^3	0.225 mg/m^3	——	X
Tetramethyl succinonitrile	3333-52-6	0.5 ppm	1.5 ppm	——	X
Tetranitromethane	509-14-8	1 ppm	3 ppm	——	——
Tetrasodium pyrophosphate	7722-88-5	5 mg/m^3	10 mg/m^3	——	——
Tetryl (2, 4, 6-trinitrophenyl-methylnitramine)	479-45-8	1.5 mg/m^3	3 mg/m^3	——	X
Thallium (soluble compounds) (as Tl)	7440-28-0	0.1 mg/m^3	0.3 mg/m^3	——	X
4, 4-Thiobis (6-tert-butyl-m-cresol)	96-69-5	——	——	——	——
Total particulate	——	10 mg/m^3	20 mg/m^3	——	——
Respirable fraction	——	5 mg/m^3	10 mg/m^3	——	——
Thiodan (Endosulfan)	115-29-7	0.1 mg/m^3	0.3 mg/m^3	——	X
Thioglycolic acid	68-11-1	1 ppm	3 ppm	——-	X
Thionyl chloride	7719-09-7	——	——	1 ppm	——
Thiram	137-26-8	5 mg/m^3	10 mg/m^3	——	——
Tin (as Sn)	——	——	——	——	——
Inorganic compounds	7440-31-5	2 mg/m^3	4 mg/m^3	——	——
Tin (as Sn)	——	——	——	——	——
Organic compounds	7440-31-5	0.1 mg/m^3	0.3 mg/m^3	——	X
Tin oxide (as Sn)	21651-19-4	2 mg/m^3	4 mg/m^3	——	——
Titanium dioxide	13463-67-7	——	——	——	——
Total particulate	——	10 mg/m^3	20 mg/m^3	——	——
TNT (2, 4, 6-Trinitrotoluene)	118-96-7	0.5 mg/m^3	1.5 mg/m^3	——	X
Toluene	108-88-3	100 ppm	150 ppm	——	——
Toluene-2, 4-diisocyanate (TDI)	584-84-9	0.005 ppm	0.02 ppm	——-	——
m-Toluidine	108-44-1	2 ppm	4 ppm	——	X
o-Toluidine	95-53-4	2 ppm	4 ppm	——	X
p-Toluidine	106-49-0	2.0 ppm	4 ppm	——	X
Toxaphene (Chlorinated camphene)	8001-35-2	0.5 mg/m^3	1 mg/m^3	——	X
Tremolite	——	——	——	——	——
Tributyl phosphate	126-73-8	0.2 ppm	0.6 ppm	——	——
Trichloroacetic acid	76-03-9	1 ppm	3 ppm	——	——
1, 2, 4-Trichlorobenzene	120-82-1	——	——	5 ppm	——
1, 1, 1-Trichloroethane (Methyl chloroform)	71-55-6	350 ppm	450 ppm	——	——
1, 1, 2-Trichloroethane	79-00-5	10 ppm	20 ppm	——	——
Trichloroethylene	79-01-6	50 ppm	200 ppm	——	——
Trichlorofluoromethane (Fluorotrichloromethane)	75-69-4	——	——	1,000 ppm	——
Trichloromethane (Chloroform)	67-66-3	2 ppm	4 ppm	——	——
Trichloronaphthalene	1321-65-9	5 mg/m^3	10 mg/m^3	——	X
1, 2, 3-Trichloropropane	96-18-4	10 ppm	20 ppm	——	X
1, 1, 2-Trichloro-1, 2, 2-trifluoroethane	76-13-1	1,000 ppm	1,250 ppm	——	——
Tricyclohexyltin hydroxide (Cyhexatin)	13121-70-5	5 mg/m^3	10 mg/m^3	——	——
Triethylamine	121-44-8	10 ppm	15 ppm	——	——
Trifluorobromomethane	75-63-8	1,000 ppm	1,250 ppm	——	——
Trimellitic anhydride	552-30-7	0.005 ppm	0.015 ppm	——	——

Substance	CAS	TWA_8	STEL	Ceiling	Skin
Trimethylamine	75-50-3	10 ppm	15 ppm	——	——
Trimethyl benzene	25551-13-7	25 ppm	38 ppm	——	——
Trimethyl phosphite	121-45-9	2 ppm	4 ppm	——	——
2, 4, 6-Trinitrophenol (Picric acid)	88-89-1	0.1 mg/m^3	0.3 mg/m^3	——	X
2, 4, 6-Trinitrophenyl-methylnitramine (Tetryl)	479-45-8	1.5 mg/m^3	3 mg/m^3	——	X
2, 4, 6-Trinitrotoluene (TNT)	118-96-7	0.5 mg/m^3	1.5 mg/m^3	——	X
Triorthocresyl phosphate	78-30-8	0.1 mg/m^3	0.3 mg/m^3	——	X
Triphenyl amine	603-34-9	5 mg/m^3	10 mg/m^3	——	——
Triphenyl phosphate	115-86-6	3 mg/m^3	6 mg/m^3	——	——
Tungsten (as W)	7440-33-7	——	——	——	——
Soluble compounds	——	1 mg/m^3	3 mg/m^3	——	——
Insoluble compounds	——	5 mg/m^3	10 mg/m^3	——	——
Turpentine	8006-64-2	100 ppm	150 ppm	——	——
Uranium (as U)	7440-61-1	——	——	——	——
Soluble compounds	——	0.05 mg/m^3	0.15 mg/m^3	——	——
Insoluble compounds	——	0.2 mg/m^3	0.6 mg/m^3	——	——
n-Valeraldehyde	110-62-3	50 ppm	75 ppm	——	——
Vanadium (as V2O5)	——	——	——	——	——
Respirable fraction	1314-62-1	0.05 mg/m^3	0.15 mg/m^3	——	——
Vegetable oil mist	——	——	——	——	——
Total particulate	——	10 mg/m^3	20 mg/m^3	——	——
Respirable fraction	——	5 mg/m^3	10 mg/m^3	——	——
Vinyl acetate	108-05-1	10 ppm	20 ppm	——	——
Vinyl benzene (Styrene)	100-42-5	50 ppm	100 ppm	——	——
Vinyl bromide	593-60-2	5 ppm	10 ppm	——	——
Vinyl chloride (Chloroethylene)	75-01-4	1 ppm	5 ppm	——	——
Vinyl cyanide (Acrylonitrile)	107-13-1	2 ppm	10 ppm	——	——
Vinyl cyclohexene dioxide	106-87-6	10 ppm	20 ppm	——	X
Vinyl toluene	25013-15-4	50 ppm	75 ppm	——	——
Vinylidene chloride (1, 1-Dichloroethylene)	75-35-4	1 ppm	3 ppm	——	——
VM & P Naphtha	8032-32-4	300 ppm	400 ppm	——	——
Warfarin	81-81-2	0.1 mg/m^3	0.3 mg/m^3	——	——
Welding fumes (total particulate)	——	5 mg/m^3	10 mg/m^3	——	——
Wood dust	——	——	——	——	——
Nonallergenic; (All woods except allergenics)	——	5 mg/m^3	10 mg/m^3	——	——
Allergenics (e.g. cedar, mahogany and teak)	——	2.5 mg/m^3	5 mg/m^3	——	——
Xylenes (ortho, meta, and para isomers) (Dimethylbenzene)	1330-20-7	100 ppm	150 ppm	——	——
m-Xylene alpha, alpha-diamine	1477-55-0	——	——	0.1 mg/m^3	X
Xylidine (Dimethylaminobenzene)	1300-73-8	2 ppm	4 ppm	——	X
Yttrium	7440-65-5	1 mg/m^3	3 mg/m^3	——	——
Zinc chloride fume	7646-85-7	1 mg/m^3	2 mg/m^3	——	——
Zinc chromate (as CrO3)	Varies with compound	0.05 mg/m^3	——	0.1 mg/m^3	——
Zinc oxide	1314-13-2	——	——	——	——
Total particulate	——	10 mg/m^3	20 mg/m^3	——	——

Substance	CAS	TWA_8	STEL	Ceiling	Skin
Respirable fraction	——	5 mg/m^3	10 mg/m	——	——
Zinc oxide fume	1314-13-2	5 mg/g^3	10 mg/m^3	——	——
Zinc stearate	557-05-1	——	——	——	——
Total particulate	——	10 mg/m^3	20 mg/m^3	——	——
Respirable fraction	——	5 mg/m^3	10 mg/m^3	——	——
Zirconium compounds (as Zr)	7440-67-2	5 mg/m^3	10 mg/m^3	——	——

[Statutory Authority: RCW 49.17.010, 49.17.040, 49.17.050, 49.17.060. WSR 06-08-087, § 296-307-62625, filed 4/4/06, effective 9/1/06; WSR 05-01-166, § 296-307-62625, filed 12/21/04, effective 4/2/05.]

WAC 296-307-628 Definitions.

Ceiling - An exposure limit, measured over the shortest time period feasible, that must not be exceeded during any part of the employee's workday.

Dust - Solid particles suspended in air. Dusts are generated by handling, drilling, crushing, grinding, rapid impact, detonation, or decrepitation of organic or inorganic materials such as rock, ore, metal, coal, wood, grain, etc.

Exposed or exposure - The contact an employee has with a toxic substance, harmful physical agent or oxygen deficient condition. Exposure can occur through various routes of entry, such as inhalation, ingestion, skin contact, or skin absorption.

Fume - Solid particles suspended in air, generated by condensation from the gaseous state, generally after volatilization from molten metals, etc.

Gas - A normally formless fluid which can be changed to the liquid or solid state by the effect of increased pressure or decreased temperature or both.

Mist - Liquid droplets suspended in air, generated by condensation from the gaseous to the liquid state or by breaking up a liquid into a dispersed state, such as by splashing, foaming, spraying or atomizing.

Oxygen deficient - An atmosphere with an oxygen content below 19.5% by volume.

Permissible exposure limits (PEL) - Permissible exposure limits (PELs) are employee exposures to toxic substances or harmful agents that must not be exceeded. PELs are specified in applicable WISHA rules.

Short-term exposure limit (STEL) - An exposure limit averaged over a short time period (usually measured for 15 minutes) that must not be exceeded during any part of an employee's workday.

Time weighted average (TWA_8) - An exposure limit averaged over 8 hours that must not be exceeded during an employee's workday.

Toxic substance - Any chemical substance or biological agent, such as bacteria, virus, and fungus, which is any of the following:

• Listed in the latest edition of the National Institute for Occupational Safety and Health (NIOSH) Registry of Toxic Effects of Chemical Substances (RTECS)

• Shows positive evidence of an acute or chronic health hazard in testing conducted by, or known to, the employer.

The subject of a material safety data sheet kept by or known to the employer showing the material may pose a hazard to human health.

Vapor - The gaseous form of a substance that is normally in the solid or liquid state.

[Statutory Authority: RCW 49.17.010, 49.17.040, 49.17.050, 49.17.060. WSR 05-01-166, § 296-307-628, filed 12/21/04, effective 4/2/05.]

Part Y-7

Hearing Loss Prevention (Noise)

WAC 296-307-630 Scope. The purpose of this part is to:

• Prevent employee hearing loss by minimizing employee noise exposures

AND

• Make sure employees exposed to noise are protected.

These goals are accomplished by:

• Measuring and computing the employee noise exposure from all equipment and machinery in the workplace, as well as any other noise sources in the work area

• Protecting employees from noise exposure by using feasible noise controls

• Making sure employees use hearing protection, if you cannot feasibly control the noise

• Training employees about hearing loss prevention

• Evaluating your hearing loss prevention efforts by tracking employee hearing or periodically reviewing controls and protection

• Making appropriate corrections to your program.

Reference: Table 1 will help you determine the hearing loss prevention requirements for your workplace. For the specific requirements associated with Noise Evaluation Criteria, see WAC 296-307-63410 of this part.

Table 1
Noise Evaluation Criteria

Criteria	Description	Requirements
85 dBA TWA_8	Full-day employee noise exposure dose. If you have one or more employees whose exposure equals or exceeds this level, you must have a hearing loss prevention program	- Hearing protection - Training - Audiometric testing
90 dBA TWA_8	Full-day employee noise exposure dose. If you have one or more employees whose exposure	- Noise controls **AND** - Hearing protection - Training

Criteria	Description	Requirements
	equals or exceeds this level, you must reduce employee noise exposures in the workplace	- Audiometric testing
115 dBA measured using slow response	Extreme noise level (greater than one second in duration)	- Hearing protection - Signs posted in work areas warning of exposure
140 dBC measured using fast response	Extreme impulse or impact noise (less than one second in duration)	Hearing protection

[Statutory Authority: RCW 49.17.010, 49.17.040, 49.17.050, 49.17.060. WSR 05-01-166, § 296-307-630, filed 12/21/04, effective 4/2/05.]

Hearing Loss Prevention Program

WAC 296-307-632 Summary.

Your responsibility:

To prevent employee hearing loss by minimizing, and providing protection from, noise exposures.

You must:

Conduct employee noise exposure monitoring

WAC 296-307-63205

Control employee noise exposures that equal or exceed 90 dBA TWA_8

WAC 296-307-63210

Make sure employees use hearing protection when their noise exposure equals or exceed 85 dBA TWA_8

WAC 296-307-63215

Make sure exposed employees receive training about noise and hearing protection

WAC 296-307-63220

Make sure warning signs are posted for areas with noise levels that equal or exceed 115 dBA

WAC 296-307-63225

Arrange for oversight of audiometric testing

WAC 296-307-63230

Identify and correct deficiencies in your hearing loss prevention program

WAC 296-307-63235

Document your hearing loss prevention activities

WAC 296-307-63240.

[Statutory Authority: RCW 49.17.010, 49.17.040, 49.17.050, 49.17.060. WSR 05-01-166, § 296-307-632, filed 12/21/04, effective 4/2/05.]

WAC 296-307-63205 Conduct employee noise exposure monitoring.

You must:

• Conduct employee noise exposure monitoring to determine the employee's actual exposure when reasonable information indicates that any employee's exposure may equal or exceed 85 dBA TWA_8.

Note: • Representative monitoring may be used where several employees perform the same tasks in substantially similar conditions

• Examples of information or situations that can indicate exposures which equal or exceed 85 dBA TWA_8, include:

- Noise in the workplace that interferes with people speaking, even at close range
- Information from the manufacturer of equipment you use in the workplace that indicates high noise levels for machines in use
- Reports from employees of ringing in their ears or temporary hearing loss
- Warning signals or alarms that are difficult to hear
- Work near abrasive blasting or jack hammering operations
- Use of tools and equipment such as the following:

■ Heavy equipment or machinery
■ Fuel-powered hand tools
■ Compressed air-driven tools or equipment in frequent use
■ Power saws, grinders or chippers
■ Powder-actuated tools.

You must:

• Follow applicable guidance in WAC 296-307-634 when conducting noise exposure monitoring

• Make sure your sampling for noise exposure monitoring identifies:

- All employees whose exposure equals or exceeds the following:

■ 85 dBA TWA_8 (noise dosimetry, providing an average exposure over an eight-hour time period)

■ 115 dBA (slow response sound level meter, identifying short-term noise exposures)

■ 140 dBC (fast response sound level meter, identifying almost instantaneous noise exposures).

- Exposure levels for selection of hearing protection.

• Provide exposed employees and their representatives with an opportunity to observe any measurements of employee noise exposure that are conducted

• Notify each employee whose exposure equals or exceeds 85 dBA TWA_8 of the monitoring results within five working days of when you receive the results

• Conduct additional noise monitoring whenever a change in production, process, equipment or controls, may reasonably be expected to result in:

- Additional employees whose exposure equals or exceeds 85 dBA TWA_8

- Employees exposed to higher level of noise requiring more effective hearing protection.

Note: Conditions that may be expected to increase exposure include:

• Adding machinery to the work area
• Increasing production rates
• Removal or deterioration of noise control devices
• Increased use of noisy equipment
• Change in work schedule
• Change of job duties.

[Statutory Authority: RCW 49.17.010, 49.17.040, 49.17.050, 49.17.060. WSR 05-01-166, § 296-307-63205, filed 12/21/04, effective 4/2/05.]

WAC 296-307-63210 Control employee noise exposures that equal or exceed 90 dBA TWA_8.

IMPORTANT:

Hearing protection provides a barrier to noise and protects employees but is not considered a control of the noise hazard. Separate requirements apply to hearing protection and are found in WAC 296-307-63215.

You must:

• Reduce employee noise exposure, using feasible controls, wherever exposure equals or exceeds 90 dBA TWA_8.

Note: • Once noise exposures are brought below 90 dBA TWA_8, no further reduction is required. However, further reduction of noise may reduce the need for other hearing loss prevention requirements

• Controls that eliminate noise at the source or establish a permanent barrier to noise are typically more reliable. For example:

- Replacing noisy equipment with quiet equipment
- Using silencers and mufflers
- Installing enclosures
- Damping noisy equipment and parts.

• Other controls and work practices may also be useful for reducing noise exposures. Examples include:

- Employee rotation
- Limiting use of noisy equipment
- Rescheduling work.

[Statutory Authority: RCW 49.17.010, 49.17.040, 49.17.050, 49.17.060. WSR 05-01-166, § 296-307-63210, filed 12/21/04, effective 4/2/05.]

WAC 296-307-63215 Make sure employees use hearing protection when their noise exposure equals or exceeds 85 dBA TWA_8.

You must:

• Make sure employees wear hearing protectors that will provide sufficient protection when exposure equals or exceeds:

- 85 dBA TWA_8 (noise dosimetry, providing an average exposure over an eight-hour time period)
- 115 dBA (slow response sound level meter, identifying short-term noise exposures)
- 140 dBC (fast response sound level meter, identifying almost instantaneous noise exposures).

• Provide employees with an appropriate selection of hearing protectors:

- The selection must include at least two distinct types (such as molded earplugs, foam earplugs, custom-molded earplugs, earcaps, or earmuffs) for each exposed employee and must be sufficient to cover:

■ Different levels of hearing protection needed in order to reduce all employee exposures to a level below 85 dBA TWA_8

■ Different sizes

■ Different working conditions.

- Consider requests of the employees regarding:

■ Physical comfort

■ Environmental conditions

■ Medical needs

■ Communication requirements.

Note: Hearing protector selection should include earplugs, earcaps and earmuffs.

You must:

• Provide hearing protection at no cost to employees

• Supervise employees to make sure that hearing protection is used correctly

• Make sure hearing protectors are:

- Properly chosen for fit
- Replaced as necessary.

• Make sure all hearing protection is sufficient to reduce the employee's equivalent eight-hour noise exposure to 85 dBA or less. When using the A-weighted exposure measurements, reported as "dBA TWA_8," the reduction in noise exposure by hearing protectors is given by Table 2:

Table 2
Effective Protection of Hearing Protectors

Type of hearing protection	Effective protection
Single hearing protection (earplugs, earcaps or earmuffs)	7 dB less than the manufacturer assigned noise reduction rating (NRR); for example, earplugs with an NRR of 20 dB are considered to reduce employee exposures of 95 dBA TWA_8 to 82 dBA TWA_8
Dual hearing protection (earplug and earmuff worn together)	2 dB less than the higher NRR of the two protectors; for example, earplugs with an NRR of 20 dB and earmuffs with an NRR of 12 dB are considered to reduce employee exposures of 100 dBA TWA_8 to 82 dBA TWA_8

• In addition to protection based on daily noise dose, make sure hearing protection has an NRR of at least 20 dB when exposures involve noise that equals or exceeds 115 dBA (slow response sound level meter) or 140 dBC (fast response sound level meter).

Note: You may also evaluate hearing protection by using the other methods given in the NIOSH *Compendium of Hearing Protection* (DHHS (NIOSH)) Publication No. 95-105 or online at http://www.cdc.gov/niosh/topics/noise/hpcomp.html. These methods require additional monitoring and are more complex, but provide a more thorough evaluation of protection. This may be useful in cases where communication is critical or for evaluating hearing protection for employees with hearing impairment.

[Statutory Authority: RCW 49.17.010, 49.17.040, 49.17.050, 49.17.060. WSR 05-01-166, § 296-307-63215, filed 12/21/04, effective 4/2/05.]

WAC 296-307-63220 Make sure exposed employees receive training about noise and hearing protection.

You must:

• Train all employees whose noise exposure equals or exceeds 85 dBA TWA_8

• Provide training when an employee is first assigned to a position involving noise exposure that equals or exceeds 85 dBA TWA_8 **and** at least annually after that

• Update information provided in the training program to be consistent with changes in controls, hearing protectors and work processes

• Make sure your noise and hearing protection training includes:

- The effects of noise on hearing (including both occupational and nonoccupational exposures)

- Noise controls used in your workplace
- The purpose of hearing protectors: The advantages, disadvantages, and attenuation of various types
- Instructions about selecting, fitting, using, and caring for hearing protection
- The purpose and procedures for program evaluation including audiometric testing and hearing protection auditing when you choose to rely upon auditing (see WAC 296-307-638)
- The employees' right to access records kept by the employer.

• Maintain a written program describing initial and refresher training.

[Statutory Authority: RCW 49.17.010, 49.17.040, 49.17.050, 49.17.060. WSR 05-01-166, § 296-307-63220, filed 12/21/04, effective 4/2/05.]

WAC 296-307-63225 Make sure warning signs are posted for areas where noise levels equal or exceed 115 dBA.

You must:

• Make sure warning signs are posted at the entrances or boundaries of all well-defined work areas where employees may be exposed to noise that equals or exceeds 115 dBA (measured using a sound level meter with slow response).

- Warning signs must clearly indicate that the area is a high noise area and that hearing protectors are required.

[Statutory Authority: RCW 49.17.010, 49.17.040, 49.17.050, 49.17.060. WSR 05-01-166, § 296-307-63225, filed 12/21/04, effective 4/2/05.]

WAC 296-307-63230 Arrange for oversight of audiometric testing.

You must:

• Make sure audiometric testing as described by WAC 296-307-636 is supervised and reviewed by one of the following licensed or certified individuals:

- An audiologist
- An otolaryngologist
- Another qualified physician.

• Make sure audiograms are conducted by one of the above individuals or by a technician certified by the Council of Accreditation in Occupational Hearing Conservation (CAOHC) and responsible to a qualified reviewer.

[Statutory Authority: RCW 49.17.010, 49.17.040, 49.17.050, 49.17.060. WSR 05-01-166, § 296-307-63230, filed 12/21/04, effective 4/2/05.]

WAC 296-307-63235 Identify and correct deficiencies in your hearing loss prevention program.

You must:

• Use audiometric testing to identify hearing loss, which may indicate program deficiencies

• Take appropriate actions when deficiencies are found with your program.

- A deficiency may be indicated when:

■ Any employee experiences measurable hearing loss indicated by a standard threshold shift

OR

■ Any employee isn't wearing appropriate hearing protection during an audit when auditing is used in place of baseline audiograms for short term employees (see WAC 296-307-638, Option to audiometric testing).

Note: A standard threshold shift or audit deficiency does not necessarily indicate that a significant hearing loss has occurred. These criteria are intended to help identify where there may be flaws in your hearing loss prevention program that can be fixed before permanent hearing loss occurs.

There are additional statistical tools and tests that may be used to improve the effectiveness of your program. Staff conducting audiometric testing and auditing may be able to suggest additional ways to improve your hearing loss prevention program and tailor it to your worksite.

You must:

• Evaluate the following, at a minimum, when responding to a standard threshold shift:

- Employee noise exposure measurements
- Noise controls in the work area
- The selection of hearing protection available and refit employees as necessary
- Employee training on noise and the use of hearing protection and conduct additional training as necessary.

Reference: You may use the option of auditing hearing protection (see WAC 296-307-638) for employees hired or transferred to jobs with noise exposure for less than one year. You may also use audiograms provided by a third-party hearing loss prevention program in some circumstances. Details of these program options are found in WAC 296-307-638, Options to audiometric testing.

[Statutory Authority: RCW 49.17.010, 49.17.040, 49.17.050, 49.17.060. WSR 05-01-166, § 296-307-63235, filed 12/21/04, effective 4/2/05.]

WAC 296-307-63240 Document your hearing loss prevention activities.

You must:

• Create and retain records documenting noise exposures. Include, at a minimum:

- Exposure measurements required by this part for at least two years and for as long as you rely upon them to determine employee exposure
- Audiometric test records for the duration of employment for the affected employees
- Hearing protection audits, if you choose to rely upon them, for the duration of employment of the affected employees.

Note:

• You need to keep as complete a record as possible. Records developed under previous rules or in other jurisdictions need to be kept, even when they do not fulfill the full requirements of this part. Similarly, records found to have errors in collection or processing need to be kept if they provide an indication of employee exposure or medical condition not found in other records

• You may want to consider your other business needs, such as worker's compensation claims management, before discarding these records.

[Statutory Authority: RCW 49.17.010, 49.17.040, 49.17.050, 49.17.060. WSR 05-01-166, § 296-307-63240, filed 12/21/04, effective 4/2/05.]

Noise Measurement and Computation

WAC 296-307-634 Summary.

Your responsibility:

Conduct noise monitoring or measurement to evaluate employee exposures in your workplace.

You must:

Make sure that noise-measuring equipment meets recognized standards

WAC 296-307-63405

Measure employee noise exposure

WAC 296-307-63410

Use these equations when estimating full-day noise exposure from sound level measurements

WAC 296-307-63415.

[Statutory Authority: RCW 49.17.010, 49.17.040, 49.17.050, 49.17.060. WSR 05-01-166, § 296-307-634, filed 12/21/04, effective 4/2/05.]

WAC 296-307-63405 Make sure that noise-measuring equipment meets recognized standards.

You must:

• Make sure that noise dosimetry equipment meets these specifications:

- Dosimeters must be equipment class 2AS-90/80-5 of the American National Rule Specification for Personal Noise Dosimeters, ANSI S1.25-1991, such dosimeters are normally marked "Type 2."

Note: Make sure any dosimeter you use is Type 2 equipment that:

• Uses slow integration and A-weighting of sound levels.

• Has the **criterion level** set to 90 dB, so the dosimeter will report a constant 8-hour exposure at 90 dBA as a 100% dose.

• Has the **threshold level** set at 80 dB, so the dosimeter will register all noise above 80 dB.

• Uses a 5 dB **exchange rate** for averaging of noise levels over the sample period.

You must:

• Make sure that sound level meters meet these specifications:

- American National Standard Specification for Sound Level Meters, S1.4-1984, Type 2 requirements for sound level meters, such sound level meters are normally marked "Type 2."

■ For continuous noise measurements, the meter must be capable of measuring A-weighted sound levels with slow response

■ For impulse or impact noise measurements, the meter must be capable of indicating maximum C-weighted sound level measurements with fast response.

• Calibrate dosimeters and sound level meters used to monitor employee noise exposure:

- Before and after each day's use

AND

- Following the instrument manufacturer's calibration instructions.

Note: • You may conduct dosimetry using an exchange rate less than 5 dB and compare the results directly to the noise evaluation criteria in Table 1

• For measuring impulse and impact noise you may also use a sound level meter set to measure maximum impulse C-weighted sound levels or peak C-weighted sound levels.

[Statutory Authority: RCW 49.17.010, 49.17.040, 49.17.050, 49.17.060. WSR 05-01-166, § 296-307-63405, filed 12/21/04, effective 4/2/05.]

WAC 296-307-63410 Measure employee noise exposure.

IMPORTANT:

A noise dosimeter is the basis for determining total daily noise exposure for employees. However, where you have constant noise levels, you may estimate employee noise exposure using measurements from a sound level meter. Calculation of the employee noise exposure must be consistent with WAC 296-307-63415.

You must:

• Include all:

- Workplace noise from equipment and machinery in use

- Other noise from sources necessary to perform the work

- Noise outside the control of the exposed employees.

• Use a noise dosimeter when necessary to measure employee noise dose

• Use a sound level meter to evaluate continuous and impulse noise levels

• Identify all employees whose exposures equal or exceed the Noise Evaluation Criteria as follows:

Noise Evaluation Criteria

Criteria	Description	Requirements
85 dBA TWA_8	Full-day employee noise exposure dose. If you have one or more employees whose exposure equals or exceeds this level, you must have a hearing loss prevention program	- Hearing protection - Training - Audiometric testing
90 dBA TWA_8	Full-day employee noise exposure dose. If you have one or more employees whose exposure equals or exceeds this level, you must reduce employee noise exposures in the workplace	Noise controls (in addition to the requirements for 85 dBA TWA_8)
115 dBA measured using slow response	Extreme noise level (greater than one second in duration)	- Hearing protection - Signs posted in work areas warning of exposure
140 dBC measured using fast response	Extreme impulse or impact noise (less than one second in duration)	Hearing protection

[Statutory Authority: RCW 49.17.010, 49.17.040, 49.17.050, 49.17.060. WSR 05-01-166, § 296-307-63410, filed 12/21/04, effective 4/2/05.]

WAC 296-307-63415 Use these equations when estimating full-day noise exposure from sound level measurements.

You must:

• Compute employee's full-day noise exposure by using the appropriate equations from Table 3 "Noise Dose Computation" **when** using a sound level meter to estimate noise dose.

Table 3
Noise Dose Computation

Description	Equation
Compute the noise dose based on several time periods of constant noise during the shift	The total noise dose over the work day, as a percentage, is given by the following equation where C_n indicates the total time of exposure at a specific noise level, and T_n indicates the reference duration for that level. $D = 100*((C_1/T_1) + (C_2/T_2) + (C_3/T_3) + ... + (C_n/T_n))$
The reference duration is equal to the time of exposure to continuous noise at a specific sound level that will result in a one hundred percent dose	The reference duration, T, for sound level, L, is given in hours by the equation: $T = 8/(2^{((L - 90)/5)})$
Given a noise dose as a percentage, compute the equivalent eight-hour time weighted average noise level	The equivalent eight-hour time weighted average, TWA_8, is computed from the dose, D, by the equation: $TWA_8 = 16.61* Log_{10}(D/100) + 90$

[Statutory Authority: RCW 49.17.010, 49.17.040, 49.17.050, 49.17.060. WSR 05-01-166, § 296-307-63415, filed 12/21/04, effective 4/2/05.]

Audiometric Testing

WAC 296-307-636 Summary.

Your responsibility:

To conduct audiometric testing of employees exposed to noise to make sure that their hearing protection is effective.

You must:

Provide audiometric testing at no cost to employees

WAC 296-307-63605

Establish a baseline audiogram for each exposed employee

WAC 296-307-63610

Conduct annual audiograms

WAC 296-307-63615

Review audiograms that indicate a standard threshold shift

WAC 296-307-63620

Keep the baseline audiogram without revision, unless annual audiograms indicate a persistent threshold shift or a significant improvement in hearing

WAC 296-307-63625

Make sure a record is kept of audiometric tests

WAC 296-307-63630

Make sure audiometric testing equipment meets these requirements

WAC 296-307-63635.

[Statutory Authority: RCW 49.17.010, 49.17.040, 49.17.050, 49.17.060. WSR 05-01-166, § 296-307-636, filed 12/21/04, effective 4/2/05.]

WAC 296-307-63605 Provide audiometric testing at no cost to employees.

You must:

• Provide audiograms, including any required travel or necessary additional examinations or testing, at no cost to exposed employees.

[Statutory Authority: RCW 49.17.010, 49.17.040, 49.17.050, 49.17.060. WSR 05-01-166, § 296-307-63605, filed 12/21/04, effective 4/2/05.]

WAC 296-307-63610 Establish a baseline audiogram for each exposed employee.

You must:

• Conduct a baseline audiogram when an employee is first assigned to work involving noise exposures that equal or exceed 85 dBA TWA_8.

- Make sure this audiogram is completed no more than one hundred eighty days after the employee is first assigned

OR

- Make sure employee is covered by a hearing protection audit program (as described by WAC 296-307-638 and available as an alternative only for employees hired for less than one year).

Note: Employers who utilize mobile test units are allowed up to one year to obtain a valid baseline audiogram for each exposed employee. The employees must still be given training and hearing protection as required by this part.

You must:

• Make sure employees are not exposed to workplace noise at least fourteen hours before testing to establish a baseline audiogram.

- Hearing protectors may be used to accomplish this.

• Notify employees of the need to avoid high levels of nonoccupational noise exposure (such as loud music, headphones, guns, power tools, motorcycles, etc.) during the fourteen-hour period immediately preceding the baseline audiometric examination.

[Statutory Authority: RCW 49.17.010, 49.17.040, 49.17.050, 49.17.060. WSR 05-01-166, § 296-307-63610, filed 12/21/04, effective 4/2/05.]

WAC 296-307-63615 Conduct annual audiograms.

You must:

• Conduct annual audiograms for employees as long as they continue to be exposed to noise that equals or exceeds 85 dBA TWA_8.

Note: Annual audiometric testing may be conducted at any time during the work shift. By conducting the annual audiogram during the work shift with the employee exposed to typical noise for their job, the test may record a temporary threshold shift. This makes the test more sensitive to potential hearing loss and may help you improve employee protection before a permanent threshold shift occurs. A suspected temporary shift is one reason an employer may choose to retest employee hearing.

You must:

• Make sure each employee is informed of the results of his or her audiometric test.

- Include whether or not there has been a hearing level decrease or improvement since their previous test.

• Make sure each employee's annual audiogram is compared to his or her baseline audiogram by an audiologist, otolaryngologist, another qualified physician, or the technician

conducting the test to determine if a standard threshold shift has occurred.

- If the annual audiogram indicates that an employee has suffered a standard threshold shift, you may obtain a retest within thirty days and consider the results of the retest as the annual audiogram.

• Make sure that an audiologist, otolaryngologist, or other qualified physician sees any annual audiogram that indicates a standard threshold shift.

[Statutory Authority: RCW 49.17.010, 49.17.040, 49.17.050, 49.17.060. WSR 05-01-166, § 296-307-63615, filed 12/21/04, effective 4/2/05.]

WAC 296-307-63620 Review audiograms that indicate a standard threshold shift.

You must:

• Make sure the health care professional supervising audiograms has:

- A copy of this part

- The baseline audiogram and most recent audiogram of the employee to be evaluated

- Background noise level records for the testing room

- Calibration records for the audiometer.

• Obtain an opinion from the health care professional supervising audiograms as to whether the audiograms indicate possible occupational hearing loss and any recommendations for changes in hearing protection.

• Pay for any clinical audiological evaluation or otological examination required by the reviewer, if:

- Additional review is necessary to evaluate the cause of hearing loss

OR

- If there is indication of a medical condition of the ear caused or aggravated by the wearing of hearing protectors.

• Inform the employee in writing of the existence of a standard threshold shift within twenty-one calendar days of the determination.

• Make arrangements for the reviewer to communicate to the employee any suspected medical conditions that are found unrelated to your workplace. This information is confidential and must be handled appropriately.

[Statutory Authority: RCW 49.17.010, 49.17.040, 49.17.050, 49.17.060. WSR 05-01-166, § 296-307-63620, filed 12/21/04, effective 4/2/05.]

WAC 296-307-63625 Keep the baseline audiogram without revision, unless annual audiograms indicate a persistent threshold shift or a significant improvement in hearing.

You must:

• Keep the baseline audiogram without revision, unless a qualified reviewer determines:

- The standard threshold shift revealed by the audiogram is persistent

OR

- The hearing threshold shown in the annual audiogram indicates significant improvement over the baseline audiogram.

[Statutory Authority: RCW 49.17.010, 49.17.040, 49.17.050, 49.17.060. WSR 05-01-166, § 296-307-63625, filed 12/21/04, effective 4/2/05.]

WAC 296-307-63630 Make sure a record is kept of audiometric tests.

You must:

• Retain a legible copy of all employee audiograms conducted under this part.

- Make sure the record includes:

■ Name and job classification of the employee

■ Date of the audiogram

■ The examiner's name

■ Date of the last acoustic or exhaustive calibration of the audiometer

■ Employee's most recent noise exposure assessment

■ The background sound pressure levels in audiometric test rooms.

[Statutory Authority: RCW 49.17.010, 49.17.040, 49.17.050, 49.17.060. WSR 05-01-166, § 296-307-63630, filed 12/21/04, effective 4/2/05.]

WAC 296-307-63635 Make sure audiometric testing equipment meets these requirements.

You must:

• Use pure tone, air conduction, hearing threshold examinations, with test frequencies including as a minimum 500, 1000, 2000, 3000, 4000, and 6000 Hz

- Tests at each frequency must be taken separately for each ear

- Supra-aural headphones must be used.

• Conduct audiometric tests with audiometers (including microprocessor audiometers) that meet the specifications of, and are maintained and used according to, American National Standard Specification for Audiometers, S3.6-1996

• Check the functional operation of the audiometer each day before use by doing all of the following:

- Make sure the audiometer's output is free from distorted or unwanted sound

- Test either a person with known, stable hearing thresholds or a bio-acoustic simulator

- Perform acoustic calibration for deviations of 10 dB or greater.

• Audiometer calibration must be checked acoustically at least annually to verify continued conformance with ANSI S3.6-1996. Test frequencies below 500 Hz and above 6000 Hz may be omitted from this check

• An exhaustive calibration must be performed at least every two years according to the American National Standard Specification for Audiometers, S3.6-1996. Test frequencies below 500 Hz and above 6000 Hz may be omitted from the calibration

• Provide audiometric test rooms that meet the requirements of ANSI S3.1-1999 American National Standard Maximum Permissible Ambient Noise Levels for Audiometric Test Rooms using the following table of Maximum Ambient Sound Pressure Levels:

Table 4
Maximum Ambient Sound Pressure Levels

Frequency (Hz)	500	1000	2000	4000	8000
Sound Pressure Level (dB)	40	40	47	57	62

Note: The American Industrial Hygiene Association and National Hearing Conservation Association recommend conducting audiograms using the requirements of ANSI S3.1-1999 American National Standard Maximum Permissible Ambient Noise Levels for Audiometric Test Rooms with adjustments at only 500 Hz and below.

[Statutory Authority: RCW 49.17.010, 49.17.040, 49.17.050, 49.17.060. WSR 05-01-166, § 296-307-63635, filed 12/21/04, effective 4/2/05.]

Options to Audiometric Testing

WAC 296-307-638 Summary.

Your responsibility:

This section provides options to baseline audiometric testing for employees assigned to duties with noise exposures for **less than one year.** These program options may also be used to provide added assessment of longer-term employees in addition to audiometric testing.

The requirements of this section apply only if you decide to use auditing or a third-party hearing loss prevention program and do not conduct baseline audiometric testing for those employees.

Hearing Protection Audits

You must:

Conduct hearing protection audits at least quarterly

WAC 296-307-63805

Make sure staff conducting audits are properly trained

WAC 296-307-63810

Assess the hearing protection used by each employee during audits

WAC 296-307-63815

Document your hearing protection audits

WAC 296-307-63820

Third-Party Audiometric Testing

You must:

Make sure third-party hearing loss prevention programs meet the following requirements

WAC 296-307-63825

IMPORTANT:

Hearing protection audits are a tool for use in evaluating your hearing loss prevention program in cases where audiometric testing does not provide a useful measure. For example, if most of your employees are hired on a temporary basis for a few months at a time, audiometric testing may not identify the small changes in hearing acuity that could occur. Auditing provides an alternative to audiometric testing in these cases.

Auditing is not required unless you use it in place of baseline audiometric testing for employees hired for a period of **less than one year** and is permitted as a substitute for audiometric testing only for these employees.

Third-party hearing loss prevention programs are full hearing loss prevention programs and are distinct from audiometric testing provided by third parties as part of your own hearing loss prevention program. These programs may be organized by labor groups, trade associations, labor-management cooperatives, or other organizations to:

• Cover a specific group of employees

OR

• Combine efforts for several employers with common employees.

Although you remain responsible for the program, third-party programs can have at least two benefits over running your own program:

• The audiometric testing is portable between the participating employers so new testing will not be needed when an employee changes employers

• Employees who only work for short periods for any one employer can be monitored under the group program over a longer period of time increasing the effectiveness of the audiometric testing in preventing hearing loss for these employees.

[Statutory Authority: RCW 49.17.010, 49.17.040, 49.17.050, 49.17.060. WSR 05-01-166, § 296-307-638, filed 12/21/04, effective 4/2/05.]

WAC 296-307-63805 Conduct hearing protection audits at least quarterly.

You must:

• Conduct audits at least quarterly to provide a representative assessment of your workplace

- The assessment is representative if it:

■ Covers all processes and work activities in your business at full production levels

AND

■ Covers all employees present on the audit day.

- If your business is mobile or involves variable processes, auditing may need to be repeated more often than quarterly

- Auditing does not need to be repeated more than monthly as long as a reasonable effort is made to cover:

■ The activities with greatest exposure

AND

■ As many employees as possible.

• Assess exposures and hearing protection for the full shift for each employee covered at the time of the audit.

[Statutory Authority: RCW 49.17.010, 49.17.040, 49.17.050, 49.17.060. WSR 05-01-166, § 296-307-63805, filed 12/21/04, effective 4/2/05.]

WAC 296-307-63810 Make sure staff conducting audits are properly trained.

You must:

• Make sure staff conducting hearing protection audits:

- Can demonstrate competence in:

■ Evaluating hearing protection attenuation

■ Evaluating hearing protector choices

■ Assessing the correct use of hearing protectors.

- Are certified by the Council for Accreditation in Occupational Hearing Conservation (CAOHC) or have training in the following areas:

■ Noise and hearing loss prevention

■ Washington state noise regulations

■ Hearing protectors

■ Fitting of hearing protectors

■ Basic noise measurement

■ Hearing loss prevention recordkeeping.

[Statutory Authority: RCW 49.17.010, 49.17.040, 49.17.050, 49.17.060. WSR 05-01-166, § 296-307-63810, filed 12/21/04, effective 4/2/05.]

WAC 296-307-63815 Assess the hearing protection used by each employee during audits.

You must:

• Confirm that:

- Current site conditions during audits are consistent with conditions existing during noise monitoring

- The hearing protection used by the employee is sufficient and appropriate for the conditions

- The hearing protection is worn properly

- The employees are satisfied with the performance and comfort of the hearing protection.

[Statutory Authority: RCW 49.17.010, 49.17.040, 49.17.050, 49.17.060. WSR 05-01-166, § 296-307-63815, filed 12/21/04, effective 4/2/05.]

WAC 296-307-63820 Document your hearing protection audits.

You must:

• Keep a record of audit results for each employee assessed for the length of their employment and for the length of time you will rely upon the audit results

• Include the following information in the record:

- The make and model of the hearing protectors

- The size of the protectors

- Average noise exposure of the employee

- Any problems found with use of the hearing protection

- Any comments or complaints from the employee regarding the hearing protection.

[Statutory Authority: RCW 49.17.010, 49.17.040, 49.17.050, 49.17.060. WSR 05-01-166, § 296-307-63820, filed 12/21/04, effective 4/2/05.]

Third-party Audiometric Tests

WAC 296-307-63825 Make sure third-party hearing loss prevention programs meet the following requirements.

IMPORTANT:

Third-party hearing loss prevention programs are intended:

• For short-term employees hired or assigned to duties having noise exposures **for less than one year**

AND

• For seasonal employees.

However, other employees may be included as long as you meet all requirements for hearing loss follow-ups and recordkeeping.

You must:

• Make sure that the third-party program is:

- Equivalent to an employer program as required by this part

AND

- Uses audiometric testing to evaluate hearing loss.

• Make sure a licensed or certified audiologist, otolaryngologist, or other qualified physician administers the third-party program

• Make sure the third-party program has written procedures for:

- Communicating with participating employers of program requirements

- Follow-up procedures for detected hearing loss

- Annual review of participating employer programs.

• Make sure the following program elements are corrected by you or the third-party program when deficiencies are found:

- Noise exposures

- Hearing protection

- Employee training

- Noise controls.

• Obtain a review of your hearing loss prevention program at least once per year, conducted by the third-party program administrator or their representative, in order to:

- Identify any tasks needing a revised selection of hearing protection

AND

- Provide an overall assessment of the employers' hearing loss prevention activities.

[Statutory Authority: RCW 49.17.010, 49.17.040, 49.17.050, 49.17.060. WSR 05-01-166, § 296-307-63825, filed 12/21/04, effective 4/2/05.]

WAC 296-307-640 Noise definitions.

A-weighted - An adjustment to sound level measurements that reflects the sensitivity of the human ear. Used for evaluating continuous or average noise levels.

Audiogram - A chart, graph, or table resulting from an audiometric test showing an individual's hearing threshold levels as a function of frequency.

Audiologist - A professional, specializing in the study and rehabilitation of hearing, who is certified by the American Speech, Hearing, and Language Association, or the American Academy of Audiology, and is licensed by the state board of examiners.

Baseline audiogram - The audiogram against which future audiograms are compared. The baseline audiogram is collected when an employee is first assigned to work with noise exposure. The baseline audiogram may be revised if persistent standard threshold shift (STS) of improvement is found.

Continuous noise - Noise with peaks spaced no more than one second apart. Continuous noise is measured using sound level meters and noise dosimeters with the slow response setting.

Criterion sound level - A sound level of ninety decibels. An eight-hour exposure to constant 90 dBA noise is a one hundred percent noise dose exposure.

C-weighted - An adjustment to sound level measurements that evenly represents frequencies within the range of human hearing. Used for evaluating impact or impulse noise.

Decibel (dB) - Unit of measurement of sound level. A-weighting, adjusting for the sensitivity of the human ear, is indicated as "dBA." C-weighting, an even reading across the frequencies of human hearing, is indicated as "dBC."

Fast response - A setting for a sound level meter that will allow the meter to respond to noise events of less than one second. Used for evaluating impulse and impact noise levels.

Hertz (Hz) - Unit of measurement of frequency, numerically equal to cycles per second.

Impulsive or impact noise - Noise levels which involve maxima at intervals greater than one second. Impulse and impact noise are measured using the fast response setting on a sound level meter.

Noise dose - The total noise exposure received by an employee during their shift. It can be expressed as a percentage indicating the ratio of exposure received to the noise exposure received in an eight-hour exposure to constant noise at 90 dBA. It may also be expressed as the sound level that

would produce the equivalent exposure during an eight-hour period (TWA_8).

Noise dosimeter - An instrument that integrates a function of sound pressure over a period of time in such a manner that it directly indicates a noise dose.

Occupational hearing loss - A reduction in the ability of an individual to hear either caused or contributed to by exposure in the work environment.

Otolaryngologist - A physician specializing in diagnosis and treatment of disorders of the ear, nose and throat.

Permanent threshold shift - A hearing level change that has become persistent and is not expected to improve.

Qualified reviewer - An audiologist, otolaryngologist, or other qualified physician who has experience and training in evaluating occupational audiograms.

Slow response - A setting for sound level meters and dosimeters in which the meter does not register events of less than about one second. Used for evaluating continuous and average noise levels.

Sound level - The intensity of noise as indicated by a sound level meter.

Sound level meter - An instrument that measures sound levels.

Standard threshold shift (STS) - A hearing level change, relative to the baseline audiogram, of an average of 10 dB or more at 2000, 3000, and 4000 Hz in either ear.

Temporary threshold shift - A hearing level change that improves. A temporary threshold shift may occur with exposure to noise and hearing will return to normal within a few days. Temporary threshold shifts can be indicators of exposures that lead to permanent hearing loss.

TWA_8 - Equivalent eight-hour time-weighted average sound level - That sound level, which if constant over an eight-hour period, would result in the same noise dose measured in an environment where the noise level varies.

[Statutory Authority: RCW 49.17.010, 49.17.040, 49.17.050, 49.17.060. WSR 05-01-166, § 296-307-640, filed 12/21/04, effective 4/2/05.]

Part Y-8

Confined Spaces

WAC 296-307-642 Scope. This part applies to all confined spaces and provides requirements to protect employees from the hazards of entering and working in confined spaces. This part applies in any of the following circumstances:

• You have confined spaces in your workplace.

• Your employees will enter another employer's confined spaces.

• A contractor will enter your confined spaces.

• You provide confined space rescue services.

You can use Table 1 to help you decide which requirements to follow for confined spaces.

Table 1
Requirements for Confined Spaces

For confined spaces that are	The requirements in the following sections apply					
	644	646	648	650	652	654
Permit-required confined spaces	X	X	X	X	X	X
Entered by a contractor	X	X	X	X	X	X
Nonpermit confined spaces	X					X
Never entered	X					
If you only:						
Use alternate entry procedures	X	X	X		X	
Have a contractor enter your space	X					
Are a rescue service provider		X	X	X		

Definition:

A **confined space** is a space that is ALL of the following:

• Large enough and arranged so an employee could fully enter the space and work.

• Has limited or restricted entry or exit. Examples of spaces with limited or restricted entry are tanks, vessels, silos, storage bins, hoppers, vaults, excavations, and pits.

• Not primarily designed for human occupancy.

Note:
• Requirements in other chapters may apply to your work. You will find some safety and health requirements are addressed on a broad level in this part, while being addressed for a specific application in another rule. When this happens, both requirements apply and should not conflict. When a conflict does occur, you need to follow the more specific requirement.
• If you are uncertain which requirements to follow, contact your local labor and industries (L&I) office.

[Statutory Authority: RCW 49.17.010, 49.17.040, 49.17.050, 49.17.060. WSR 05-01-166, § 296-307-642, filed 12/21/04, effective 4/2/05.]

WAC 296-307-644 Summary. Identifying and controlling permit-required confined spaces.

Your responsibility:

To identify your permit-required confined spaces and control employee entry.

You must:

Identify permit-required confined spaces.

WAC 296-307-64402

Inform employees and control entry to permit-required confined spaces.

WAC 296-307-64404

Follow these requirements when you contract with another employer to enter your confined space.

WAC 296-307-64406

[Statutory Authority: RCW 49.17.010, 49.17.040, 49.17.050, 49.17.060. WSR 05-01-166, § 296-307-644, filed 12/21/04, effective 4/2/05.]

WAC 296-307-64402 Identify permit-required confined spaces.

IMPORTANT:

If your workplace contains only nonpermit confined spaces and your employees do not enter another employer's confined space, you may follow only the requirements in:

- WAC 296-307-644, Identifying and controlling permit-required confined spaces; and

- WAC 296-307-654, Nonpermit confined space requirements.

You must:

• Identify all permit-required confined spaces in your workplace.

• Assume any confined space is a permit-required confined space, unless you determine the space to be a nonpermit confined space.

- If you enter the space to determine the hazards, follow the requirements in WAC 296-307-650, Permit entry procedures.

- If you evaluate the confined space and there are no potential or actual hazards, you can consider it to be a nonpermit confined space.

• Document your determination that the space is nonpermit, as required by WAC 296-307-654.

Definitions:

A **permit-required confined space or permit space** is a confined space that has one or more of the following characteristics capable of causing death or serious physical harm:

- Contains or has a potential to contain a hazardous atmosphere.

- Contains a material with the potential for engulfing someone who enters the space.

- Has an internal configuration that could allow someone entering to be trapped or asphyxiated by inwardly converging walls or by a floor, which slopes downward and tapers to a smaller cross-section.

- Contains any physical hazard. This includes any recognized health or safety hazards including engulfment in solid or liquid material, electrical shock, or moving parts.

- Contains any other recognized safety or health hazard that could either:

• Impair the ability to self rescue;

OR

• Result in a situation that presents an immediate danger to life or health.

A **nonpermit confined space** is a confined space that does NOT contain actual hazards or potential hazards capable of causing death or serious physical harm.

[Statutory Authority: RCW 49.17.010, 49.17.040, 49.17.050, 49.17.060. WSR 05-01-166, § 296-307-64402, filed 12/21/04, effective 4/2/05.]

WAC 296-307-64404 Inform employees and control entry to permit-required confined spaces.

You must:

(1) Provide information about confined spaces as follows:

• Make available to affected employees and their authorized representatives all information and documents required by this part.

• Inform affected employees about the existence, location, and danger of any permit-required confined spaces in your workplace by:

- Posting danger signs; or

- Using any other equally effective means to inform employees.

Note: A sign reading "Danger-Permit Required Confined Space, DO NOT ENTER" or using pictures or other similar wording employees can understand would satisfy the requirement for a sign.

You must:

(2) Take effective measures to prevent unauthorized employees from entering permit-required confined spaces.

Note: Examples of measures to prevent employee entry include padlocks, bolted covers, special tools to remove covers, and providing employee training.

[Statutory Authority: RCW 49.17.010, 49.17.040, 49.17.050, 49.17.060. WSR 05-01-166, § 296-307-64404, filed 12/21/04, effective 4/2/05.]

WAC 296-307-64406 Follow these requirements when you contract with another employer to enter your confined space.

IMPORTANT:

The contractor is responsible for following all confined space requirements in this part and in other rules that apply.

You must:

• Do **all** of the following if you arrange to have another employer (contractor) perform work that involves entry into your permit-required confined space:

- Inform the contractor:

■ That the workplace contains permit-required confined spaces and entry is allowed only if the applicable requirements of this part are met.

■ Of the identified hazards and your experience with each permit-required confined space.

■ Of any precautions or procedures you require for the protection of employees in or near spaces where the contractor will be working.

- Coordinate entry operations with the contractor, when either employees or employers from the different companies will be working in or near permit-required confined spaces.

- Discuss entry operations with the contractor when they are complete. Include the following in your discussion:

■ The program followed during confined space entry; and

■ Any hazards confronted or created.

[Statutory Authority: RCW 49.17.010, 49.17.040, 49.17.050, 49.17.060. WSR 05-01-166, § 296-307-64406, filed 12/21/04, effective 4/2/05.]

Permit-required Confined Space Program

WAC 296-307-646 Summary.

Your responsibility:

To develop your permit-required confined space program and practices.

IMPORTANT:

This section applies if employees will enter a permit-required confined space.

You must:

Develop a written permit-required confined space program.

WAC 296-307-64602

Meet these additional requirements if your employees enter another employer's confined space.

WAC 296-307-64604

[Statutory Authority: RCW 49.17.010, 49.17.040, 49.17.050, 49.17.060. WSR 05-01-166, § 296-307-646, filed 12/21/04, effective 4/2/05.]

WAC 296-307-64602 Develop a written permit-required confined space program.

IMPORTANT:

• Identify and evaluate the hazards of permit-required confined spaces and the work performed, to assist you in developing your entry program.

You must:

• Develop a written program, before employees enter, that describes the means, procedures, and practices you use for the safe entry of permit-required confined spaces as required by this part. Include the following when applicable to your confined space entry program:

- Documentation of permit entry procedures.
- Documentation used for alternate entry procedures.
- How to reclassify permit-required confined spaces to nonpermit spaces.
- Designation of employee roles, such as entrants, attendants, entry supervisors, rescuers, or those who test or monitor the atmosphere in a permit-required space.
- Identification of designated employee duties.
- Training employees on their designated roles.
- How to identify and evaluate hazards.
- Use and maintenance of equipment.
- How to prevent unauthorized entry.
- How to coordinate entry with another employer.
- How to rescue entrants.

Note: For alternate entry, your written program only needs to meet the requirements of WAC 296-307-648, Employee training, and WAC 296-307-652, Alternate entry procedures, of this part.

You must:

• Consult with affected employees and their authorized representatives when developing and implementing all aspects of your permit-required confined space program.

• Make the written program available to employees and their authorized representatives.

• Update your written program as necessary.

[Statutory Authority: RCW 49.17.010, 49.17.040, 49.17.050, 49.17.060. WSR 05-01-166, § 296-307-64602, filed 12/21/04, effective 4/2/05.]

WAC 296-307-64604 Meet these additional requirements if your employees enter another employer's confined space.

You must:

• Obtain any available information about permit-required confined space hazards and entry operations from the host employer.

• Coordinate entry operations with any other employers whose employees will be working in or near the permit-required confined space.

• Inform the host employer, either through a debriefing or during entry operations, about:

- The entry program you will follow; and
- Any hazards you confronted or created in the space during entry operations.

[Statutory Authority: RCW 49.17.010, 49.17.040, 49.17.050, 49.17.060. WSR 05-01-166, § 296-307-64604, filed 12/21/04, effective 4/2/05.]

Employee Training

WAC 296-307-648 Summary.

Your responsibility:

To make sure employees are trained to perform their designated roles safely.

You must:

Provide employee training.

WAC 296-307-64802

Certify employee proficiency.

WAC 296-307-64804

[Statutory Authority: RCW 49.17.010, 49.17.040, 49.17.050, 49.17.060. WSR 05-01-166, § 296-307-648, filed 12/21/04, effective 4/2/05.]

WAC 296-307-64802 Provide employee training.

You must:

• Provide training to each employee involved in permit-required confined space activities, so they acquire the understanding, knowledge and skills necessary to safely perform assigned duties.

- Establish employee proficiency in their confined space duties.
- Introduce new or revised procedures as necessary.

Note:

• Employers can determine employee proficiency by:

- Observing employee performance during training exercises that simulate actual confined space conditions.
- A comprehensive written examination; or
- Any other method that is effective for the employer.

You must:

• Provide training at the following times:

- Before an employee is first assigned to duties covered by this part.
- Before there is a change in an employee's assigned duties.
- When there is a permit-required confined space hazard for which the employee has not already been trained.
- If you have reason to believe that there are either:

■ Deviations from your procedures for permit-required confined space entry; or

■ Employee knowledge or use of your procedures is inadequate.

[Statutory Authority: RCW 49.17.010, 49.17.040, 49.17.050, 49.17.060. WSR 05-01-166, § 296-307-64802, filed 12/21/04, effective 4/2/05.]

WAC 296-307-64804 Certify employee proficiency.

You must:

• Certify employee proficiency in their assigned duties.

• Make sure the certification:

- Contains each employee's name, the trainer's written or electronic signature or initials, and the dates of training.
- Is available for inspection by employees and their authorized representatives.

[Statutory Authority: RCW 49.17.010, 49.17.040, 49.17.050, 49.17.060. WSR 05-01-166, § 296-307-64804, filed 12/21/04, effective 4/2/05.]

Permit Entry Procedures

WAC 296-307-650 Summary.

Your responsibility:

To establish procedures for the safe permit-required entry of confined spaces.

Implement procedures for entry permits.

WAC 296-307-65002

Use an entry permit that contains all required information.

WAC 296-307-65004

Keep and review your entry permits.

WAC 296-307-65006

Prevent unauthorized entry.

WAC 296-307-65008

Provide, maintain, and use proper equipment.

WAC 296-307-65010

Evaluate and control hazards for safe entry.

WAC 296-307-65012

Make sure you have adequate rescue and emergency services available.

WAC 296-307-65014

Use nonentry rescue systems or methods whenever possible.

WAC 296-307-65016

Make sure entry supervisors perform their responsibilities and duties.

WAC 296-307-65018

Provide an attendant outside the permit-required confined space.

WAC 296-307-65020

Make sure entrants know the hazardous conditions and their duties.

WAC 296-307-65022

Implement procedures for ending entry.

WAC 296-307-65024

[Statutory Authority: RCW 49.17.010, 49.17.040, 49.17.050, 49.17.060. WSR 05-01-166, § 296-307-650, filed 12/21/04, effective 4/2/05.]

WAC 296-307-65002 Implement procedures for entry permits.

You must:

• Identify and evaluate, before employees enter, potential hazards from:

- The permit-required confined space; and
- The work to be performed.

• Complete an entry permit before entry is authorized, documenting that you have completed the means, procedures and practices necessary for safe entry and work.

• Make sure that entrants or their representatives have an opportunity to observe any monitoring or testing, or any actions to eliminate or control hazards, performed to complete the permit.

• Identify the entry supervisor.

- Make sure the entry supervisor signs the entry permit, authorizing entry, before the space is entered.

• Make the completed permit available to entrants or their authorized representatives at the time of entry.

- Do this by either posting the completed permit at the entry location, or by any other equally effective means.

• Make sure the duration of the permit does not exceed the time required to complete the assigned task or job identified on the permit.

• Note any problems encountered during an entry operation on the permit. Use the information to make appropriate revisions to your program, entry operations, means, systems, procedures and practices.

[Statutory Authority: RCW 49.17.010, 49.17.040, 49.17.050, 49.17.060. WSR 05-01-166, § 296-307-65002, filed 12/21/04, effective 4/2/05.]

WAC 296-307-65004 Use an entry permit that contains all required information.

You must:

• Make sure your entry permit identifies **all** of the following that apply to your entry operation:

- The space to be entered.
- Purpose of the entry.
- Date and the authorized duration of the entry permit.
- Hazards of the space to be entered.
- Acceptable entry conditions.
- Results of initial and periodic tests performed to evaluate and identify the hazards and conditions of the space, accompanied by the names or initials of the testers and by an indication of when the tests were performed.
- Appropriate measures used before entry to isolate the space, and eliminate or control hazards.

• Examples of appropriate measures include the lockout or tagging of equipment and procedures for purging, inerting, ventilating, and flushing permit-required confined spaces.

- Names of entrants and current attendants.

• Other means include the use of rosters or tracking systems as long as the attendant can determine quickly and accurately, for the duration of the permit, which entrants are inside the space.

- The current entry supervisor.
- A space for the signature or initials of the original supervisor authorizing entry.
- Communication procedures for entrants and attendants to maintain contact during the entry.
- Equipment provided for safe entry, such as:

■ Personal protective equipment (PPE).
■ Testing equipment.
■ Communications equipment.
■ Alarm systems.
■ Rescue equipment.

- Rescue and emergency services available, and how to contact them. Include equipment to use, and names and contact information.
- Other information needed for safety in the particular confined space.
- Additional permits issued for work in the space, such as for hot work.

[Statutory Authority: RCW 49.17.010, 49.17.040, 49.17.050, 49.17.060. WSR 05-01-166, § 296-307-65004, filed 12/21/04, effective 4/2/05.]

WAC 296-307-65006 Keep and review your entry permits.

You must:

• Keep entry permits for at least one year.

• Keep entry permits or other atmospheric monitoring records that show the actual atmosphere an employee entered or worked in, as employee exposure records.

• Review your permit-required confined space entry program as follows:

- Conduct a review when you have any reason to believe your entry program may not protect employees, and revise your program before allowing subsequent entries.

Note: Examples of circumstances requiring the review of your program include the following:

• There is unauthorized entry of a permit space.

• A permit space hazard not covered by the permit is found.

• A condition prohibited by the permit occurs.

• An injury or near-miss occurs during entry.

• There is a change in the use or configuration of a permit space.

• An employee complains about the effectiveness of the program.

You must:

• Review canceled entry permits within one year following each entry to evaluate:

- Your permit-required confined space program.

- The protection provided to employees entering permit-required confined spaces.

• Update your written permit-required confined space entry program as necessary.

Note: Employers may perform a single annual review covering all entries performed during a twelve-month period. If no entry is performed during a twelve-month period, no review is necessary.

[Statutory Authority: RCW 49.17.010, 49.17.040, 49.17.050, 49.17.060. WSR 05-01-166, § 296-307-65006, filed 12/21/04, effective 4/2/05.]

WAC 296-307-65008 Prevent unauthorized entry.

You must:

• Implement measures necessary to prevent unauthorized entry into permit-required confined spaces, when conducting authorized entry.

Note: • When removing entrance covers to open the confined space, protect entrants and those outside the confined space from hazards.

• Examples of measures to prevent unauthorized entry are signs, barricades, warning tape, and an attendant.

[Statutory Authority: RCW 49.17.010, 49.17.040, 49.17.050, 49.17.060. WSR 05-01-166, § 296-307-65008, filed 12/21/04, effective 4/2/05.]

WAC 296-307-65010 Provide, maintain, and use proper equipment.

You must:

• Provide the equipment in Table 2, when needed and at no cost to employees.

• Make sure that employees use provided equipment properly.

• Maintain the provided equipment.

Table 2
Equipment Provided to Employees at No Cost

Type of equipment	For
Testing and monitoring equipment	Evaluating permit-required confined space conditions
Ventilating equipment	Obtaining and maintaining acceptable entry conditions
Communication equipment	Effective communication between the attendant and the entrants and to initiate rescue when required
Personal protective equipment (PPE)	Protecting employees from hazards of the space or the work performed
Lighting equipment	Employees to see well enough to work safely and to exit the space quickly in an emergency
Barriers or shields, such as pedestrian, vehicle or other barriers	Protecting employees from hazards outside of the space
Ladders	Safe entry and exit by entrants
Rescue and emergency equipment, except for equipment provided by the rescue service provider	Safe and effective rescue
Any other equipment	Safe entry into and rescue from permit-required confined spaces

[Statutory Authority: RCW 49.17.010, 49.17.040, 49.17.050, 49.17.060. WSR 05-01-166, § 296-307-65010, filed 12/21/04, effective 4/2/05.]

WAC 296-307-65012 Evaluate and control hazards for safe entry.

• Evaluate and control hazards for safe entry into permit-required confined spaces by doing all the following:

- Test for atmospheric hazards, in this order:

■ Oxygen.

■ Combustible gases and vapors.

■ Toxic gases and vapors.

- Provide each entrant or their authorized representative an opportunity to observe any of the following:

■ Preentry testing.

■ Subsequent testing.

■ Monitoring of permit-required spaces.

- Reevaluate the permit-required space in the presence of any entrant, or their authorized representative, who requests this to be done because they have reason to believe that the evaluation of that space may not have been adequate.

- Upon request, immediately provide each entrant or their authorized representative, with the results of any testing required by this rule.

- Continuously monitor conditions in areas where entrants are working, when isolation of the space is not feasible.

• Examples would be a large space or space that is part of a continuous system, such as a sewer.

• Evaluate space conditions during entry as follows:

Table 3
Evaluating Space Conditions

You must:	In order to
Test conditions before entry	Determine that acceptable entry conditions exist before entry is authorized by the entry supervisor
Test or evaluate space conditions during entry	Determine that acceptable entry conditions are being maintained during entry operations
Evaluate entry operations	Make sure entrants of more than one employer working at the same time in or around a permit-required confined space, do not endanger each other

IMPORTANT:

This section applies to both:

• Employers whose employees use permit entry procedures; and

• Employers who provide rescue services.

[Statutory Authority: RCW 49.17.010, 49.17.040, 49.17.050, 49.17.060. WSR 05-01-166, § 296-307-65012, filed 12/21/04, effective 4/2/05.]

WAC 296-307-65014 Make sure you have adequate rescue and emergency services available.

You must:

(1) Make sure you have adequate rescue and emergency services available during your permit-required confined space entry operations.

• Evaluate and select rescue teams or services who can:

- Respond to a rescue call in a timely manner. Timeliness is based on the identified hazards. Rescuers must have the capability to reach potential victims within an appropriate time frame based on the identified permit space hazards.

- Proficiently rescue employees from a permit-required confined space in your workplace. Rescuers must have the appropriate equipment for the type of rescue.

• Make sure that at least one member of the rescue team or service holds a current certification in first aid and cardiopulmonary resuscitation (CPR).

• Inform each rescue team or service about the hazards they may confront when called to perform rescue.

• Provide the rescue team or service with access to all permit spaces from which rescue may be necessary.

- This will allow them to develop appropriate rescue plans and to practice rescue operations.

Note: What will be considered timely will vary according to the specific hazards involved in each entry. For example, WAC 296-307-594, Respirators, requires that employers provide a standby person or persons capable of immediate action to rescue employee(s) for work areas considered to contain an IDLH atmosphere.

You must:

(2) Provide employees, assigned to provide permit-required confined space rescue and emergency services, with:

• Personal protective equipment (PPE) needed for safe entry.

• Other equipment required to conduct rescues safely.

• Training so they are:

- Proficient in the use of the PPE and other equipment.

- Proficient as an entrant of permit-required confined spaces.

- Able to safely perform assigned rescue and emergency duties.

- Knowledgeable in basic first aid and cardiopulmonary resuscitation (CPR).

• Practice sessions for permit-required confined space rescues **at least** once every twelve months where dummies, manikins, or actual persons are removed from either:

- The actual permit spaces; or

- Representative permit spaces that simulate the opening size, configuration, and accessibility, of permit spaces where rescue will be performed.

(3) Establish procedures for:

• Contacting rescue and emergency services.

• Rescuing entrants from permit-required confined spaces.

• Providing necessary emergency services to rescued entrants.

• Preventing unauthorized persons from attempting a rescue.

[Statutory Authority: RCW 49.17.010, 49.17.040, 49.17.050, 49.17.060. WSR 05-01-166, § 296-307-65014, filed 12/21/04, effective 4/2/05.]

WAC 296-307-65016 Use nonentry rescue systems or methods whenever possible.

You must:

• Use nonentry retrieval systems or methods to rescue entrants in a permit-required confined space unless this:

- Would increase the overall risk of injury to entrants; or

- Would not contribute to the rescue of the entrant.

• Make sure each entrant uses a chest or full-body harness, with a retrieval line attached to the harness at one of the following locations:

- At the center of the employee's back, near shoulder level.

- Above the employee's head.

- At another point which presents a profile small enough for the successful removal of the employee.

• Attach the retrieval line to a mechanical device or fixed point outside the space, so rescue can begin as soon as necessary.

• Make sure a mechanical device is available to retrieve entrants from vertical spaces more than five feet (1.52 m) deep.

Note: When you can demonstrate that the use of a chest or full-body harness is not feasible or creates a greater hazard, then you may use wristlets or another method shown to be the safest and most effective alternative.

[Statutory Authority: RCW 49.17.010, 49.17.040, 49.17.050, 49.17.060. WSR 05-01-166, § 296-307-65016, filed 12/21/04, effective 4/2/05.]

WAC 296-307-65018 Make sure entry supervisors perform their responsibilities and duties.

You must:

• Make sure that an entry supervisor:

- Authorizes the entry into a permit-required confined space by signing the entry permit.

- Oversees entry operations.

- Knows about the hazards that may be faced during entry, including the mode, signs or symptoms, and consequences of the exposure.

- Verifies and checks **all** of the following:

■ The appropriate entries have been made on the permit.

■ All tests specified by the permit have been conducted.

■ All procedures and equipment specified by the permit are in place before approving the permit and allowing entry to the space.

- Terminates the entry and cancels the permit when:

■ The assigned task or job has been completed.

■ A condition in the space that is not covered by the entry permit is discovered.

- Verifies that rescue services are available and that there is a way to contact them.

- Removes unauthorized individuals who enter or attempt to enter the permit-required confined space during entry operations.

- Determines that entry operations remain consistent with the terms of the entry permit and acceptable entry conditions are maintained:

■ Whenever responsibility for a permit-required space entry operation is transferred; and

■ At regular intervals dictated by the hazards and operations performed within the space.

Note:
- Make sure entry supervisors have the required knowledge and proficiency to perform the job duties and responsibilities required by this part.
- The entry supervisor may also perform other duties under this part, such as attendant or entrant, if they are trained and proficient in those duties.
- The responsibility of the entry supervisor may be passed from one supervisor to another during an entry operation.

[Statutory Authority: RCW 49.17.010, 49.17.040, 49.17.050, 49.17.060. WSR 05-01-166, § 296-307-65018, filed 12/21/04, effective 4/2/05.]

WAC 296-307-65020 Provide an attendant outside the permit-required confined space.

IMPORTANT:

• The number of attendants assigned should be tailored to the requirements of the space and the work performed.

• You need to assess if it is appropriate or possible to have multiple permit spaces monitored by a single attendant, or have an attendant stationed at a location outside each space. Video cameras and radios are examples of tools that may assist an attendant monitoring more than one space.

• Attendants may be stationed at any location outside the permit-required confined space if the duties described in this section can be effectively performed for each space that is monitored.

You must:

• Provide at least one attendant outside the permit-required confined space during entry operations.

• Make sure each permit-required confined space attendant:

- Understands the hazards that may be faced during entry, including the mode, signs or symptoms, and results of exposure to the hazards.

- Is aware of the behavioral effects of exposure to the hazard.

- Continuously maintains an accurate count of entrants in the space.

- Maintains an accurate record of who is in the permit-required confined space.

- Communicates with entrants as necessary to monitor their status or alert them of the need to evacuate the space.

- Monitors activities inside and outside the space to determine if it is safe for entrants to remain in the space.

- Orders entrants to evacuate the space immediately if **any** of the following conditions occur:

■ A prohibited condition.

■ The behavioral effects of hazardous exposure on an entrant.

■ A situation outside the space that could endanger entrants.

■ The attendant cannot effectively and safely perform all the duties required in this part.

- Takes the following actions when unauthorized persons approach or enter a space:

■ Warns unauthorized persons to stay away from the space.

■ Tells the unauthorized persons to exit immediately if they have entered the space.

■ Informs entrants and the entry supervisor if unauthorized persons have entered the space.

- Performs nonentry rescues as specified by your rescue procedure.

- Has the means to respond to an emergency affecting one or more of the permit spaces being monitored without preventing performance of the attendant's duties to the other spaces being monitored.

- Carries out no duties that might interfere with their primary duty to monitor and protect the entrants.

- Calls for rescue and other emergency services as soon as entrants may need assistance to escape from the space.

- Monitors entry operations until relieved by another attendant or all entrants are out of the space.

[Statutory Authority: RCW 49.17.010, 49.17.040, 49.17.050, 49.17.060. WSR 05-01-166, § 296-307-65020, filed 12/21/04, effective 4/2/05.]

WAC 296-307-65022 Make sure entrants know the hazardous conditions and their duties.

You must:

• Make sure that all entrants:

- Know the hazards they may face during entry, including the mode, signs or symptoms, and results of exposure to the hazards.

- Use equipment properly.

- Communicate with the attendant as necessary so the attendant can:

■ Monitor entrant status.

■ Alert entrants of the need to evacuate.

- Alert the attendant whenever either of these situations exist:

■ A warning sign or symptom of exposure to a dangerous situation such as, behavioral changes, euphoria, giddiness potentially from lack of oxygen or exposure to solvents.

■ A prohibited condition.

- Exit from the permit-required confined space as quickly as possible when one of the following occurs:

■ The attendant or entry supervisor gives an order to evacuate.

■ The entrant recognizes any warning sign or symptom of exposure to a dangerous situation.

■ The entrant detects a prohibited condition.

■ An evacuation alarm is activated.

[Statutory Authority: RCW 49.17.010, 49.17.040, 49.17.050, 49.17.060. WSR 05-01-166, § 296-307-65022, filed 12/21/04, effective 4/2/05.]

WAC 296-307-65024 Implement procedures for ending entry.

You must:

• Make sure you terminate the entry when entry operations are completed, including securing an entrance cover and canceling the permit.

[Statutory Authority: RCW 49.17.010, 49.17.040, 49.17.050, 49.17.060. WSR 05-01-166, § 296-307-65024, filed 12/21/04, effective 4/2/05.]

WAC 296-307-652 Alternate entry procedures.

Summary:

Your responsibility:

To choose alternate entry procedures for spaces where the only hazard is a hazardous atmosphere.

IMPORTANT:

In addition to this section, you also need to meet the requirements in the following sections of this part:

- WAC 296-307-644, Identifying and controlling permit-required confined spaces.

- WAC 296-307-646, Permit-required confined space program.

- WAC 296-307-648, Employee training.

You must:

Make sure the following conditions are met if using alternate entry procedures.

WAC 296-307-65202

Follow these alternate entry procedures for permit-required confined spaces.

WAC 296-307-65204

[Statutory Authority: RCW 49.17.010, 49.17.040, 49.17.050, 49.17.060. WSR 05-01-166, § 296-307-652, filed 12/21/04, effective 4/2/05.]

WAC 296-307-65202 Make sure the following conditions are met if using alternate entry procedures.

You must:

• Make sure, when using alternate entry procedures, instead of permit entry procedures, that you have monitoring and inspection data that supports the following:

- That the only hazard of the permit-required confined space is an actual or potentially hazardous atmosphere.

- That continuous forced air ventilation alone is all that is needed to maintain the permit-required confined space for safe entry.

• Make sure an entry to obtain monitoring and inspection data or to eliminate hazards is performed according to WAC 296-307-500, Permit entry procedures.

• Make sure all documentation produced is available to each affected employee and their authorized representative.

[Statutory Authority: RCW 49.17.010, 49.17.040, 49.17.050, 49.17.060. WSR 05-01-166, § 296-307-65202, filed 12/21/04, effective 4/2/05.]

WAC 296-307-65204 Follow these alternate entry procedures for permit-required confined spaces.

You must:

• Use the following alternate entry procedures:

- Eliminate any unsafe conditions before removing an entrance cover.

■ When entrance covers are removed, promptly guard the opening with a railing, temporary cover, or other temporary barrier to prevent accidental falls through the opening and protect entrants from objects falling into the space.

■ Certify that preentry measures have been taken (such as safe removal of the cover and having protection needed to gather preentry data), with the date, location of the space, and signature of the person certifying.

• Make the preentry certification available before entry to each entrant.

- Before an employee enters the confined space, test the internal atmosphere with a calibrated, direct-reading instrument for all of the following, in this order:

■ Oxygen content.

■ Flammable gases and vapors.

■ Potential toxic air contaminants.

- Provide entrants, or their authorized representatives, with an opportunity to observe the preentry and periodic testing.

- Make sure the atmosphere within the space is not hazardous when entrants are present.

- Use continuous forced air ventilation, as follows:

■ Wait until the forced air ventilation has removed any hazardous atmosphere before allowing entrants into the space.

■ Direct forced air ventilation toward the immediate areas where employees are, or will be, and continue ventilation until all employees have left the space.

• Provide the air supply from a clean source and make sure it does not increase hazards in the space.

- Test the atmosphere within the space as needed to make sure hazards do not accumulate.

- If a hazardous atmosphere is detected during entry, do all of the following:

■ Evacuate employees from the space immediately.

■ Evaluate the space to determine how the hazardous atmosphere developed.

■ Implement measures to protect employees from the hazardous atmosphere before continuing the entry operation.

■ Verify the space is safe for entry before continuing the entry operation.

[Statutory Authority: RCW 49.17.010, 49.17.040, 49.17.050, 49.17.060. WSR 05-01-166, § 296-307-65204, filed 12/21/04, effective 4/2/05.]

WAC 296-307-654 Nonpermit confined spaces requirements.

Summary:

IMPORTANT:

A confined space may be classified as a nonpermit confined space for as long as the hazards remain eliminated. Once a hazard is present, you must follow all requirements of this part that apply.

Your responsibility:

To make sure any space you classify as nonpermit does not have the potential to contain serious health or safety hazards.

You must:

Follow these requirements when classifying a confined space as a nonpermit confined space.

WAC 296-307-65402

Reevaluate nonpermit confined spaces if hazards develop.

WAC 296-307-65404

[Statutory Authority: RCW 49.17.010, 49.17.040, 49.17.050, 49.17.060. WSR 05-01-166, § 296-307-654, filed 12/21/04, effective 4/2/05.]

WAC 296-307-65402 Follow these requirements when classifying a confined space as a nonpermit confined space.

You must:

• Make sure the confined space meets these conditions to be classified as nonpermit confined spaces:

- The confined space does not contain an actual or potential hazardous atmosphere.

- The confined space does not contain hazards capable of causing death or serious physical harm. This includes any recognized health or safety hazards including engulfment in solid or liquid material, electrical shock, or moving parts.

- If you must enter to remove hazards, the space must be treated as a permit-required confined space until hazards have been eliminated.

Note:
• Controlling atmospheric hazards through forced air ventilation does not eliminate the hazards.
• You should evaluate the use of lockout-tagout, as covered in WAC 296-307-320, to determine if using it fully eliminates the hazard.
• You are allowed to use alternate entry procedures covered in WAC 296-307-652, if you can demonstrate that forced air ventilation alone will control all hazards in the space.

You must:

• Document how you determined the confined space contained no permit-required confined space hazards. Certify this documentation with the following:

- Date.

- Location of the space.

- Signature of the person making the determination.

• Make the certification available to each entrant, or their authorized representative.

Note: This certification must be completed every time a permit-required confined space is reclassified as a nonpermit space.

[Statutory Authority: RCW 49.17.010, 49.17.040, 49.17.050, 49.17.060. WSR 05-01-166, § 296-307-65402, filed 12/21/04, effective 4/2/05.]

WAC 296-307-65404 Reevaluate nonpermit confined spaces if hazards develop.

You must:

• Reclassify a nonpermit confined space to a permit-required confined space, if necessary, when changes in the use or configuration of the space increase the hazards to entrants.

• Make sure all employees exit the space if hazards develop. You must then reevaluate the space and determine whether it must be reclassified as a permit-required confined space.

[Statutory Authority: RCW 49.17.010, 49.17.040, 49.17.050, 49.17.060. WSR 05-01-166, § 296-307-65404, filed 12/21/04, effective 4/2/05.]

WAC 296-307-656 Definitions.

Acceptable entry conditions:

The conditions that must exist in a permit-required confined space to allow safe entry and work.

Attendant:

An individual stationed outside one or more permit-required confined spaces to monitor the entrants.

Blanking or blinding:

The absolute closure of a pipe, line, or duct by fastening a solid plate (such as a spectacle blind or a skillet blind) that completely covers the bore. It is capable of withstanding the maximum pressure of the pipe, line, or duct with no leakage beyond the plate.

Confined space:

A space that is **all** of the following:

• Large enough and arranged so an employee could fully enter the space and work.

• Has limited or restricted entry or exit. Examples of spaces with limited or restricted entry are tanks, vessels, silos, storage bins, hoppers, vaults, excavations, and pits.

• Not primarily designed for human occupancy.

Double block and bleed:

The closure of a line, duct, or pipe by closing and locking or tagging two in-line valves and by opening and locking or tagging a drain or vent valve in the line between the two closed valves.

Emergency:

Any occurrence (including any failure of hazard control or monitoring equipment) or event internal or external to the permit-required confined space that could endanger authorized entrants.

Engulfment:

The surrounding capture of a person by a liquid or finely divided (flowable) solid substance that can be inhaled to cause death by filling or plugging the respiratory system or that can exert enough force on the body to cause death by strangulation, constriction, or crushing.

Enter (entry):

The action by which a person passes through an opening into a permit-required confined space and includes work activities in that space. Entry is considered to have occurred as soon as any part of the entrant's body breaks the plane of an opening into the space.

Note: If the opening is large enough for the worker to fully enter the space, a permit is required even for partial body entry. Permits are not required for partial body entry where the opening is not large enough for full entry, although other rules such as lockout-tagout, WAC 296-307-320 or respiratory hazards, WAC 296-307-624 may apply.

Entrant:

An employee who is authorized by the employer to enter a permit-required confined space.

Entry permit (permit):

The written or printed document that is provided by you to allow and control entry into a permit-required confined

space and that contains the information required in WAC 296-307-650, Permit entry procedures.

Entry supervisor:

The person (such as the employer, crew leader, or crew chief) responsible for:

• Determining if acceptable entry conditions are present at a permit-required confined space where entry is planned;

• Authorizing entry and overseeing entry operations; and

• Terminating entry as required.

Hazardous atmosphere:

An atmosphere that may expose employees to the risk of death, incapacitation, impairment of ability to self-rescue (that is, escape unaided from a permit-required confined space), injury, or acute illness caused by one or more of the following:

• Flammable gas, vapor, or mist in excess of ten percent of its lower flammable limit (LFL).

• Airborne combustible dust at a concentration that meets or exceeds its LFL.

Note: This concentration may be approximated as a condition in which the dust obscures vision at a distance of five feet (1.52 m) or less.

• Atmospheric oxygen concentration below 19.5 percent or above 23.5 percent.

• Atmospheric concentration of any substance which may exceed a permissible exposure limit. For additional information about atmospheric concentration, see chapter 296-62 WAC, Parts F, G, and I, General occupational health standards and WAC 296-307-624, Respiratory hazards.

Note: An airborne concentration of a substance that is not capable of causing death, incapacitation, impairment of ability to self-rescue, injury, or acute illness due to its health effects is not covered by this definition.

• Any other atmospheric condition that is immediately dangerous to life or health.

Note: You can find guidance on establishing acceptable atmospheric conditions for air contaminants, which have no WISHA-determined doses or permissible exposure limits using other sources of information, such as:

• Material safety data sheets required by WAC 296-307-550, Employer chemical hazard communication.

• Published information.

• Internal documents.

Hot work permit:

A written authorization to perform operations, for example, riveting, welding, cutting, burning, and heating, that can provide a source of ignition.

Immediately dangerous to life or health (IDLH):

Any of the following conditions:

• An immediate or delayed threat to life.

• Anything that would cause irreversible adverse health effects.

• Anything that would interfere with an individual's ability to escape unaided from a permit-required confined space.

Note: Some materials - hydrogen fluoride gas and cadmium vapor, for example - may produce immediate transient effects that, even if severe, may pass without medical attention, but are followed by sudden, possibly fatal collapse twelve to seventy-two hours after exposure. The victim "feels normal" after recovery from transient effects until collapse. Such materials in hazardous quantities are considered to be "immediately" dangerous to life or health (IDLH).

Inerting:

The displacement of the atmosphere in a permit-required confined space by a noncombustible gas (such as nitrogen) to such an extent that the resulting atmosphere is noncombustible.

Note: This procedure produces an IDLH oxygen-deficient atmosphere.

Isolation:

The process by which a permit-required confined space is removed from service and completely protected against the release of energy and material into the space by such means as: Blanking or blinding; misaligning or removing sections of lines, pipes, or ducts; a double block and bleed system; lockout or tagout of all sources of energy; or blocking or disconnecting all mechanical linkages.

Line breaking:

The intentional opening of a pipe, line, or duct that is or has been carrying flammable, corrosive, or toxic material, an inert gas, or any fluid at a volume, pressure, or temperature capable of causing injury.

Nonpermit confined space:

A confined space that does NOT contain actual hazards or potential hazards capable of causing death or serious physical harm.

Oxygen deficient atmosphere:

An atmosphere containing less than 19.5 percent oxygen by volume.

Oxygen enriched atmosphere:

An atmosphere containing more than 23.5 percent oxygen by volume.

Permit-required confined space or permit space:

A confined space that has one or more of the following characteristics capable of causing death or serious physical harm:

• Contains or has a potential to contain a hazardous atmosphere.

• Contains a material with the potential for engulfing someone who enters.

• Has an internal configuration that could allow someone entering to be trapped or asphyxiated by inwardly converging walls or by a floor, which slopes downward and tapers to a smaller cross section.

• Contains any physical hazard. This includes any recognized health or safety hazards including engulfment in solid or liquid material, electrical shock, or moving parts.

• Contains any other recognized serious safety or health hazard that could either:

- Impair the ability to self-rescue; or

- Result in a situation that presents an immediate danger to life or health.

Permit-required confined space program:

An overall program for:

• Controlling and appropriately protecting employees from permit-required confined space hazards; and

• Regulating employee entry into permit-required confined spaces.

Prohibited condition:

Any condition in a permit-required confined space that is not allowed by the permit during the authorized entry period.

Rescue service:

The personnel designated to rescue employees from permit-required confined spaces.

Retrieval system:

The equipment used for nonentry rescue of persons from permit-required confined spaces, such as a retrieval line, full-body harness or wristlets, and a lifting device or anchor.

Testing:

The process of identifying and evaluating the hazards that entrants may be exposed to in a permit-required confined space. Testing includes specifying the tests that are to be performed in the permit-required confined space.

Note: Testing allows employers to devise and implement adequate controls to protect entrants during entry, and to determine if acceptable entry conditions are present.

[Statutory Authority: RCW 49.17.010, 49.17.040, 49.17.050, 49.17.060. WSR 05-01-166, § 296-307-656, filed 12/21/04, effective 4/2/05.]

Part Y-10

Emergency Response

WAC 296-307-704 Scope. What is the purpose of WAC 296-307-704, Emergency response to hazardous substance releases?

To state the minimum requirements that help you protect the safety and health of your employees during a response to hazardous substance releases in your workplace or any other location.

Do the requirements of this rule apply to your workplace?

This section applies if your employees are, or could become, involved in responding to uncontrolled releases of hazardous substances in your workplace or any other location. Use the scope flow chart, and definitions that follow, to determine if this section applies to your workplace(s). Defined words are *italicized* in the flow chart.

307 - FLOWCHART

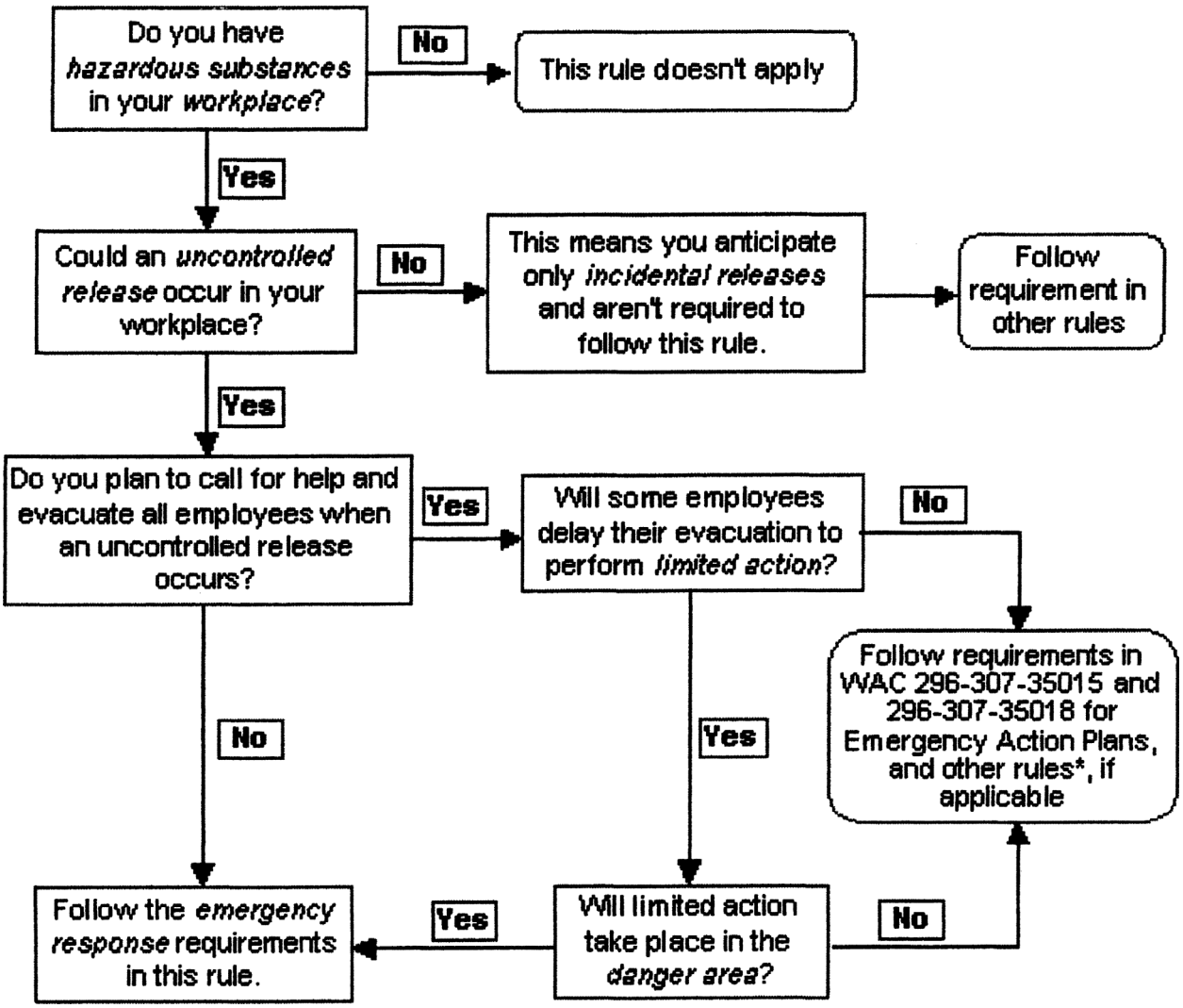

*The flow chart references other rules applicable to your workplace depending on conditions and hazards.

Examples include:

• Chapter 296-828 WAC, Hazardous chemicals in laboratories

• WAC 296-307-594, Respiratory protection.

Definitions applicable to the flow chart (see WAC 296-307-70480 for additional definitions used in this section):

Danger area

Areas where conditions pose a serious danger to employees, such as areas where:

• Immediately dangerous to life or health (IDLH) conditions could exist

OR

• High levels of exposure to toxic substances could exist

OR

• There is a potential for exceeding the lower explosive limit (LEL), also known as the lower flammability limit (LFL), of a substance.

Emergency response

A response to an anticipated release of a hazardous substance that is, or could become, an *uncontrolled release*.

Hazardous substance

Any biological, radiological, or chemical substance that can have adverse effects on humans. (See WAC 296-307-70480 for a more specific definition.)

Immediately dangerous to life or health (IDLH)

Any atmospheric condition that would:

• Cause an immediate threat to life

• Cause permanent or delayed adverse health effects

• Interfere with an employee's ability to escape.

Incidental release

A release that can be safely controlled at the time of the release and does not have the potential to become an *uncontrolled release*.

Example of a situation that results in an incidental release:

A tanker truck is receiving a load of hazardous liquid when a leak occurs. The driver knows the only hazard from the liquid is minor skin irritation. The employer has trained the driver on procedures and provided equipment to use for a release of this quantity. The driver puts on skin protection and stops the leak. A spill kit is used to contain, absorb, and pick up the spilled material for disposal.

Limited action

Action necessary to:

• Secure an operation during emergency responses,

OR

• Prevent an incident from increasing in severity.

Examples include shutting down processes and closing emergency valves.

Release

A spill, leak, or other type of hazardous substance discharge.

Uncontrolled release

A release where significant safety and health risks could be created. Releases of hazardous substances that are either incidental or could not create a safety or health hazard (i.e., fire, explosion or chemical exposure) are not considered to be uncontrolled releases.

Examples of conditions that could create a significant safety and health risk:

• Large-quantity releases

• Small-releases that could be highly toxic

• Airborne exposures that could exceed a WISHA permissible exposure limit or a published exposure limit and employees are not adequately trained or equipped to control the release.

Example of an uncontrolled release:

A forklift driver knocks over a container of a solvent-based liquid, releasing the contents onto the warehouse floor. The driver has been trained to recognize the vapor is flammable and moderately toxic when inhaled. The driver has not been trained or provided appropriate equipment to address this type of spill. In this situation, it is not safe for the driver to attempt a response. The driver needs to notify someone of the release so an emergency response can be initiated.

Workplace

• A fixed facility

OR

• A temporary location (such as a traffic corridor)

OR

• Locations where employees respond to emergencies.

Summary:

Your responsibility:

To anticipate, plan for, and manage emergency response operations so employees are protected from hazardous substances and conditions.

Note: Other chapters may apply to your workplace, such as:

• Chapter 296-62 WAC, General occupational health standards.

You will find some safety and health requirements (for example, personal protective equipment) are addressed on a general level in the core rules, while being addressed for a specific application in this section. When this happens, both requirements apply and should not conflict.

If you are uncertain which requirements to follow, you must comply with the more protective requirement. Contact your local L&I office if you need assistance in making this determination.

You must:

WAC 296-307-70410 Planning

WAC 296-307-70415 Training

WAC 296-307-70420 Medical surveillance

WAC 296-307-70425 Keep records

WAC 296-307-70430 Incident requirements

WAC 296-307-70435 Implement and maintain an incident command system (ICS) (incident command system)

WAC 296-307-70440 Prepare skilled support personnel

WAC 296-307-70445 Make sure the incident commander oversees activities during the response

WAC 296-307-70450 Use the buddy system in danger areas

WAC 296-307-70455 Provide rescue and medical assistance

WAC 296-307-70460 Personal protective equipment

WAC 296-307-70465 Control hazards created by personal protective equipment (PPE)

WAC 296-307-70470 Use personal protective equipment (PPE) properly

WAC 296-307-70475 Postemergency response

WAC 296-307-70480 Definitions.

[Statutory Authority: RCW 49.17.010, 49.17.040, 49.17.050, and 49.17.060. WSR 06-02-060, § 296-307-704, filed 1/3/06, effective 4/1/06; WSR 05-01-166, § 296-307-704, filed 12/21/04, effective 4/2/05.]

WAC 296-307-70410 Planning. Develop an emergency response plan.

Note: • You may already have an emergency response plan, such as required by chapter 296-843 WAC, Hazardous waste operations or by state and locally coordinated response efforts (Section 303 of Superfund Amendments and Reauthorization Act (SARA), Title III). You may use those plans to comply with this section, if they include the items listed below.

• Before a written emergency response plan can be developed, you will need to anticipate the types of uncontrolled releases that employees could encounter in your workplace(s).

You must:

(1) Make sure your plan is written and adequately addresses, as a minimum, all of the following:

• Preemergency planning and coordination with additional responders (including personnel from other employers such as: Fire departments, law enforcement agencies, emergency medical services, and state or federal agencies).

• Personnel roles, (see Table 1) and lines of authority and communications for all affected parties including responders.

• Employee training (see WAC 296-307-70415, train your employees), for more detail:

Note: • Responders' level of training depends on the duties and roles the employer assigns.

• Training for the employees' role should address the competencies specified in Tables 3 through 6.

• Training on specific substances may be appropriate depending on the number and characteristics of hazardous substances expected to be encountered. For example, if employees may only respond to one substance, you could provide training (covering the knowledge and skills specified in Tables 3 through 6) relevant to that single substance. If employees might respond to a range of hazardous substances, training may be required to cover categories of hazardous substances.

You must:

• Videos and automated training methods (for example: Interactive computer based programs) may be used in training; however, instructors must be readily available to:

- Encourage and provide responses to questions for the benefit of the group

- Evaluate employees' understanding of the material

- Provide instructional interaction to the group.

• Emergency recognition

• Immediate emergency procedures including:

- Methods of alerting employees (see WAC 296-307-345, Employee alarm systems) and outside responders

- Procedures for limited action (emergency prevention).

Note: ***Limited action*** includes shutting down processes, closing emergency valves and other critical actions to secure the operation, or prevent the incident from increasing in severity.

Limited Action and Employee Roles	
If . . .	**Then employees involved would be:**
Limited action could be conducted in the danger area	Considered emergency responders
Limited action will not be conducted in IDLH conditions	Considered evacuees, not emergency responders

• Details of who will evacuate immediately and who will remain behind for limited action

• Evacuation routes and procedures

• How to establish safe distances and places of refuge (for example, during emergency response the incident commander (IC) decides to make changes based on new developments, i.e., changes in the wind direction).

You must:

• Methods of securing and controlling access to the site

• Emergency medical treatment and first aid

• A complete personal protective equipment (PPE) program that addresses:

- Selection of PPE including selection criteria to be used and the identification, specified use and limitations of the PPE selected

- Training on proper use of PPE (including maintenance)

- Hazards created by wearing PPE including heat stress during temperature extremes, and/or other appropriate medical considerations

- Criteria used for determining the proper fit of PPE

- Procedures covering proper use of PPE including procedures for inspection, putting it on (donning) and removing it (doffing)

- Maintenance of PPE including procedures for decontamination, disposal and storage

- Methods used to evaluate the effectiveness of your PPE program.

Note: • If a manufacturer's printed information or WISHA rule adequately addresses procedural requirements (such as donning or doffing for PPE), it is not necessary to rewrite this into your program; simply attach the printed information.

• You may use written procedures provided by the equipment manufacturer when they meet the requirements of other chapters, including chapter 296-307 WAC, Part Y-5, Respirators.

- Emergency equipment

- Emergency response procedures

- Decontamination procedures determined by a hazardous materials specialist or other qualified individual

- Methods to critically assess the response and conduct appropriate follow-up.

You must:

(2) Make your written emergency response plan available to employees, their representatives, and WISHA personnel for inspecting or copying.

Note: In situations where multiple employers could respond to an incident, all plans should consistently address:

• Who will be designated as the incident commander (IC)

AND

• If, when, and how transfer of the incident commander (IC) position will take place.

Table 1 Roles and Duties of Emergency Responders	
If the employee's role is:	**Then all the following apply. They:**
First responder at the awareness level	• Are likely to witness or discover a hazardous substance release • Are trained to initiate an emergency response by notifying the proper authorities of the release • Take no further action beyond notifying the authorities
First responder at the operations level	• Respond to actual or potential releases in order to protect nearby persons, property, and/or the environment from the effects of the release • Are trained to respond defensively, without trying to stop the release • May try to: - Confine the release from a safe distance - Keep it from spreading - Protect others from hazardous exposures
Hazardous materials technician	• Respond to releases or potential releases, with the intent of stopping the release • Are trained to approach the point of release offensively in order to, either: - Plug - Patch - Stop the release using other methods
Hazardous materials specialist	• Respond along with, and provide support to, hazardous materials technicians • Are required to have more specific knowledge of hazardous substances than a hazardous materials technician • Act as the site activity liaison when federal, state, local, and other government authorities participate
Incident commander	• Have ultimate responsibility for: - Direction - Control - Coordination of the response effort - Will assume control of the incident beyond the first responder awareness level
Specialist employee	• Are a technical, medical, environmental, or other type of expert • May represent a hazardous substance manufacturer, shipper, or a government agency • May be present at the scene or may assist from an offsite location • Regularly work with specific hazardous substances • Are trained in the hazards of specific substances • Are expected to give technical advice or assistance to the incident commander or incident safety officer, when requested
Skilled support personnel	• Are needed to perform an immediate, specific emergency support task at the site • Are skilled in the operation of equipment including: - Earth moving equipment - Cranes - Hoisting equipment
Incident safety officer	• Are designated by the incident commander • Are knowledgeable in operations being implemented at the site • Have specific responsibility to - Identify and evaluate hazards

Table 1 Roles and Duties of Emergency Responders	
If the employee's role is:	**Then all the following apply. They:**
	- Provide direction on employee safety matters

[Statutory Authority: RCW 49.17.010, 49.17.040, 49.17.050, 49.17.060. WSR 05-01-166, § 296-307-70410, filed 12/21/04, effective 4/2/05.]

WAC 296-307-70415 Training.

Train your employees

Note: • Use Tables 3 through 6 to identify your employees' training competencies.

• You may conduct training internally, or use outside training services to comply with this section.

- When outside trainers are hired, you are still responsible for making sure the requirements of this section are met. For example, employers may compare the course outline to the competencies listed in Tables 3 through 6.

You must:

• Make sure employees are appropriately trained for their assigned roles and duties as follows:

Exemption: Skilled support employees are not covered by the training requirements of this section (see WAC 296-307-70440).

Initial training:

• Provide initial training before the employee is allowed to participate in an actual emergency response operation.

Note: When first responders at the awareness or operations level have sufficient experience to objectively demonstrate competencies specified in Table 3, you may accept experience instead of training.

• Make sure initial training adequately addresses the competencies in Tables 3 through 6 and the minimum training durations in Table 2.

• Certify that employees objectively demonstrate competencies specified in Tables 3 through 6 (except for employees trained as first responders at the awareness level).

You must:

Retraining (refresher) training:

• Provide retraining annually.

• Make sure retraining covers necessary content.

• Document training or demonstrated competency.

Note: Retraining is not required when employees demonstrate competencies annually and a record is kept of the demonstration methodology used.

You must:

Trainer qualifications:

• Verify trainers have satisfactorily completed an instructors' training course for the subjects they teach. For example, courses offered by the United States National Academy, or equivalent courses are acceptable.

OR

• Have the educational and instructional experience necessary for training.

Specialist employees:

• Specialist employees who have been sent to the scene to advise or assist must receive training or demonstrate competency in their specialty, annually.

Table 2 Minimum Training Durations for all Responders	
If you are a:	**Then:**
First responder at the awareness level	Training duration needs to be sufficient to provide the required competencies
First responder at the operations level	You need a minimum of 8 hours training (see Table 3)
Hazardous materials technician	You need a minimum of 24 hours training (see Table 4)
Hazardous materials specialist	You need a minimum of 24 hours training (see Table 4)
Incident commander	You need a minimum of 24 hours training (see Table 5)

Table 3 Competencies for First Responders at the Awareness Level and Operations Level		
	When they are designated as First Responders at the:	
Employees must be able to show they:0	**Awareness Level**	**Operations Level**
Understand what hazardous substances are and their associated risks.	X	X
Recognize the presence of hazardous substances in an emergency.	X	X
Can identify the hazardous substances, when possible.	X	X
Understand the potential consequences of hazardous substances in an emergency.	X	X

Table 3
Competencies for First Responders at the Awareness Level and Operations Level

Employees must be able to show they:0	When they are designated as First Responders at the:	
	Awareness Level	Operations Level
Understand the role of a first responder at the awareness level as described in: • The employer's emergency response plan, including site security and control. • The United States Department of Transportation's Emergency Response Guidebook. (*Search at: http://www.dot.gov.*)	X	X
Can use The United States Department of Transportation's Emergency Response Guidebook.	X	X
Recognize the need for additional resources and the need to notify the incident's communication center accordingly.	X	X
Know basic hazard and risk assessment techniques.		X
Can select and use personal protective equipment (PPE) appropriate for first responder operations level.		X
Understand basic hazardous materials terms.		X
Can perform basic control, containment, and/or confinement operations within the capabilities of the resources and PPE available.		X
Can implement decontamination procedures to their level of training.		X
Understand relevant standard operating and termination procedures.		X

Table 4
Competencies for Hazardous Materials Technicians and Hazardous Materials Specialist

Employees must be able to show they:	When they are designated as a Hazardous Materials:	
	Technician	Specialist
Have the competencies specified for the first responder operations level. (See Table 3)	X	X
Can implement an employer's emergency response plan.	X	X
Can function within their assigned role in the incident command system.	X	X
Understand hazard and risk assessment techniques.	X	X
Understand basic chemical and toxicological terminology and behavior.	X	X
Can use field survey instruments and equipment to classify, identify, and verify materials at the incident.	X	X
Can select and use personal protective equipment (PPE) appropriate for hazardous materials technicians.	X	X
Can perform advance control, containment, and/or confinement operations within the capabilities of the resources and PPE available.	X	X
Can implement decontamination procedures to their level of training.	X	X
Understand termination procedures.	X	X
Can implement the local emergency response plan.		X
Know of the state emergency response plan.		X
Can develop a site safety and control plan.		X
Understand chemical, radiological, and toxicological terminology and behavior.		X
Understand in-depth hazard and risk techniques.		X

Table 4 Competencies for Hazardous Materials Technicians and Hazardous Materials Specialist		
	When they are designated as a Hazardous Materials:	
Employees must be able to show they:	**Technician**	**Specialist**
Can use advanced survey instruments and equipment to classify, identify and verify materials at the incident.		X
Can select and use proper specialized chemical PPE given to hazardous materials specialists.		X
Can perform specialized control, containment, and/or confinement operations within the capabilities of the resources and PPE available.		X
Can determine decontamination procedures.		X

Table 5 Competencies for Incident Commanders
Employees designated as Incident Commanders must be able to show they:
• Have competencies specified for the First Responder Operations Level. (See Table 3.)
• Know of the state emergency response plan and the Federal Regional Response Team.
• Can implement the local emergency response plan.
• Can implement the employer's emergency response plan.
• Have knowledge of the incident command system (ICS) and understand how they relate to it.
• Can implement the employer's ICS.
• Understand the hazards and risks associated with employees working in chemical protective clothing.
• Understand the importance of decontamination procedures.
Note: If the first employee arriving at the scene is not trained as an IC, they may take control of the incident within their designated role and training level.

Table 6 Competencies for Specialist Employees
Employees designated as Specialist Employees must be able to show they:
• Have current knowledge in their field regarding safety and health practices relating to the specific hazardous substances.
• Have the knowledge of the ICS and understand how they relate to it.
• Understand the care and use of personal protective equipment (PPE).

[Statutory Authority: RCW 49.17.010, 49.17.040, 49.17.050, 49.17.060. WSR 05-01-166, § 296-307-70415, filed 12/21/04, effective 4/2/05.]

WAC 296-307-70420 Medical surveillance. Provide medical surveillance to employees.

You must:

(1) Provide medical surveillance for employees to comply with Tables 7 and 8, and the following:

• Make medical surveillance available at:

- Reasonable times and places.

- No cost to employees, including travel associated costs such as mileage, gas or bus fare if the employee is required to travel off site

AND

- Wages for additional time spent outside of employees' normal work hours.

• Make sure a licensed physician performs or supervises exams and procedures.

• Give complete information to the examining physician including:

- A copy of this section.

- A description of the employee's duties that relate to hazardous substance exposure.

- The hazardous substance exposure levels anticipated for the employee.

- A description of the personal protective equipment (PPE) the employee could use.

- Information available from previous medical examinations.

- The medical evaluation information required by chapter 296-307 WAC, Part Y-5, Respirators.

• Medical exams must include, at a minimum:

- A medical history.

- A work history (or updated history if on file).

- A special emphasis on:

■ Assessment of symptoms related to handling hazardous substances.

■ Health hazards.

■ Evaluation of fitness for duty (including the ability to wear any personal protective equipment (PPE) or other conditions that may be expected at the workplace).

- Other content as determined by the examining physician.

Note: The physician should consult the *Occupational Safety and Health Guidance Manual for Hazardous Waste Site Activities* and the *Medical Management Guidelines for Acute Chemical Exposure* (search OSHA web site: http://www.osha.gov).

You must:

(2) Obtain the physician's written opinion and give a copy to the employee that includes:

• A statement of whether or not medical conditions were found which would increase the employee's risk for impairment during emergency response work or respirator use.

- Do not include specific findings or diagnoses unrelated to occupational exposures.

• Limitations recommended to the employee's assigned work, if any.

• Exam and test results if the employee requests this information.

• A statement that affirms the employee has been confidentially informed of medical exam results (including medical conditions requiring follow-up).

Table 7
Medical Surveillance for Employee Categories

If the employee is covered by this section and is:	Then you must:
• Exposed for at least 30 days a year to health hazards or hazardous substances at or above the permissible exposure limit or published exposure levels (even when respirators are used), **OR** • Required to wear a respirator for at least 30 days a year.*	• Offer standard medical surveillance as specified in Table 8.*
• A hazardous materials (HAZMAT) team member. • A hazardous materials specialist.	• Provide standard medical surveillance as specified in Table 8.
• An emergency responder who shows immediate or delayed signs or symptoms possibly resulting from exposure to hazardous substances during an incident.	• Provide incident-specific medical surveillance as specified in Table 8.
• Not an emergency responder and: - May be injured. - Shows immediate or delayed signs or symptoms possibly resulting from exposure to hazardous substances. - May have been exposed to hazardous substances at concentrations above the permissible exposure limits (PELs) or the published exposure levels without appropriate PPE.	• Offer incident-specific medical surveillance as specified in Table 8.

*Note: A medical evaluation for respirator use is required by chapter 296-307 WAC, Part Y-5, Respiratory protection, for those employees who have not been cleared for respirator use during medical surveillance activities.

Table 8
Frequency of Exams and Consultations

If the employee is covered by:	Then medical surveillance must include:
• Standard medical surveillance	Exams and consultations: • Before assignment. **Note:** If the employee is a hazardous materials (HAZMAT) team member or a hazardous materials specialist, the employee must receive a baseline physical examination. • At least once every 12 months after their initial assignment unless the physician believes a shorter, or longer interval (but no more than 24 months) is appropriate. • Whenever employees are reassigned to an area where they will no longer be covered by medical surveillance and they have not been examined within the past 6 months. • As soon as possible after an employee reports: - Signs or symptoms of possible overexposure to hazardous substances or health hazards. - Injury. - Exposure above the permissible exposure limits or published exposure levels.

Table 8 Frequency of Exams and Consultations	
If the employee is covered by:	**Then medical surveillance must include:**
	• At the termination of their employment unless they were examined within the past 6 months.
• Incident-specific medical surveillance	Medical consultations and exams: • As soon as possible following the incident or development of signs or symptoms. • At additional times, if the physician determines follow-up is medically necessary.

[Statutory Authority: RCW 49.17.010, 49.17.040, 49.17.050, 49.17.060. WSR 05-01-166, § 296-307-70420, filed 12/21/04, effective 4/2/05.]

WAC 296-307-70425 Keep records.

You must:

• Keep a record of:

- Name and Social Security number of the employee receiving medical surveillance

- Physicians' written opinions, recommended limitations, and results of examinations and tests

- Any employee medical complaints regarding hazardous substance exposures

- A copy of all information given to the examining physician (except a copy of this section).

[Statutory Authority: RCW 49.17.010, 49.17.040, 49.17.050, 49.17.060. WSR 05-01-166, § 296-307-70425, filed 12/21/04, effective 4/2/05.]

WAC 296-307-70430 Incident requirements. Recognize emergencies and initiate a response.

You must:

• Make sure employees follow procedures in your emergency response plan to:

- Recognize when an emergency response must be initiated

- Notify employees, and others designated in your plan, of the release

- Follow immediate emergency procedures

- Prevent the incident from increasing in severity or to secure the operation.

[Statutory Authority: RCW 49.17.010, 49.17.040, 49.17.050, 49.17.060. WSR 05-01-166, § 296-307-70430, filed 12/21/04, effective 4/2/05.]

WAC 296-307-70435 Implement and maintain an incident command system (ICS).

You must:

(1) Make sure a single individual, acting as the incident commander (IC), is in charge of the site-specific incident command system (ICS) and acts within their designated role and training level.

Note: • For multiemployer worksites:

- The IC has responsibility for controlling emergency response operations at the site for all employers.

- Emergency response plans should be consistent in designating who assumes the IC position.

■ If the first employee arriving at the scene is not trained as an IC (see Table 5, Training Requirements for Incident Commanders and Specialist Employees, WAC 296-307-70415), they may take control of the incident within their designated role and training level.

• Procedures that address the use of engineering controls,

You must:

(2) Make sure all employers' emergency responders and their communications are coordinated and controlled by the IC.

Note: The IC may delegate tasks to subordinates (within their training level).

You must:

(3) Make sure each employer at the scene has designated a representative to assist the IC.

(4) Establish security and control of the site as specified in your written emergency response plan.

[Statutory Authority: RCW 49.17.010, 49.17.040, 49.17.050, 49.17.060. WSR 05-01-166, § 296-307-70435, filed 12/21/04, effective 4/2/05.]

WAC 296-307-70440 Prepare skilled support personnel.

Note: The duties of skilled support personnel are described in Table 1, Roles and Duties of Emergency Responders.

You must:

(1) Make sure that your skilled support personnel (including those employees who are not regularly employed by you) who could be exposed to on-scene hazards are given an initial briefing at the site before they participate in any emergency response. The initial briefing must include:

• What chemical hazards are involved

• What duties are to be performed

• Instruction in the wearing of appropriate personal protective equipment.

Note: Skilled support personnel do not need to comply with the other training requirements of this section.

You must:

(2) Make sure the safety and health precautions given to your employees are also given to skilled support personnel.

[Statutory Authority: RCW 49.17.010, 49.17.040, 49.17.050, 49.17.060. WSR 05-01-166, § 296-307-70440, filed 12/21/04, effective 4/2/05.]

WAC 296-307-70445 Make sure the incident commander oversees activities during the response. The employer of the incident commander (IC) must:

(1) Identify all hazardous substances and conditions present, within their training level, using site analysis and maximum exposure limits, when appropriate.

(2) Implement emergency response procedures appropriate to the hazardous substances and conditions present, such as:

hazardous substance handling, and new technologies

• Procedures that address decontamination

• Procedures that address PPE

• Procedures that limit the number of personnel to those who are actively performing emergency response operations, in areas where exposure could exist.

(3) Designate an incident safety officer (ISO).

• Make sure the ISO demonstrates knowledge about operations being implemented at the emergency response site. They must:

- Identify and evaluate hazards

- Communicate with the IC about hazards, immediately informing the IC of corrective actions that must be taken when conditions are judged to be:

■ An imminent danger

OR

■ Immediately dangerous to life or health (IDLH).

- Provide direction about the safety of operations.

[Statutory Authority: RCW 49.17.010, 49.17.040, 49.17.050, 49.17.060. WSR 05-01-166, § 296-307-70445, filed 12/21/04, effective 4/2/05.]

WAC 296-307-70450 Use the buddy system in danger areas.

You must:

• Make sure operations and tasks (including limited actions) in danger areas are conducted using the buddy system in teams of two or more.

Definition:

Danger areas are areas where conditions pose a serious danger to employees, such as areas where:

• Immediately dangerous to life or health (IDLH) conditions could exist.

OR

• High levels of exposure to toxic substances could exist.

OR

• There is a potential for exceeding the lower explosive limit (LEL), also known as the lower flammability limit (LFL) of a hazardous substance.

[Statutory Authority: RCW 49.17.010, 49.17.040, 49.17.050, 49.17.060. WSR 05-01-166, § 296-307-70450, filed 12/21/04, effective 4/2/05.]

WAC 296-307-70455 Provide rescue and medical assistance.

You must:

(1) Provide stand-by employees equipped with the same level of personal protective equipment (PPE) as the entrants, for assistance or rescue.

Note: • The buddy system applies to stand-by employees (WAC 296-307-70450).

• One of the two stand-by employees can be assigned to another task provided it does not interfere with the performance of the stand-by role.

• Rescue equipment should be selected and provided based on the types of rescue situations that could occur.

You must:

(2) Make sure employees trained in first aid are readily available with necessary medical equipment and have a way to transport the injured.

Note: • Employers who require their employees to provide first aid must comply with the bloodborne pathogen rule, chapter 296-823 WAC.

[Statutory Authority: RCW 49.17.010, 49.17.040, 49.17.050, 49.17.060. WSR 05-01-166, § 296-307-70455, filed 12/21/04, effective 4/2/05.]

WAC 296-307-70460 Personal protective equipment.

Note: • Only properly trained employees should select PPE. Hazardous materials technicians and hazardous materials specialists can select PPE within the competencies specified in Table 4.

• Selection requirements in other PPE rules also apply, including:

- Chapter 296-307 WAC, Part Y-5, Respirators.

- Chapter 296-305 WAC, Safety standards for firefighting.

You must:

• Provide employees with appropriate PPE and make sure it is used if hazards could be present.

• Select PPE (such as respirators, gloves, protective suits and other PPE) based on:

- An evaluation of the performance characteristics (such as breakthrough time and hazardous substance-specificity of the material or item) relevant to the requirements and limitations of the site.

- Task-specific conditions and durations.

- The hazards and potential hazards of the site (see Table 9, Selecting PPE for Specific Hazards).

• Select totally encapsulating chemical protective (TECP) suits, as specified in Table 9, that:

- Maintain positive air pressure.

- Prevent inward test gas leakage of more than 0.5 percent.

Note: Follow the manufacturer's recommended procedure for testing a TECP suit's ability to maintain positive air pressure and prevent inward gas leakage. Other established test protocols for these suits, for example NFPA 1991 and ASTM F1052-97, may also be used.

Table 9
Selecting PPE for Specific Hazards

If:	Then use:
• Inhalation hazards could be present.	• Positive-pressure (pressure-demand) self-contained breathing apparatus (SCBA) **OR** • A decreased level of respiratory protection only when the incident commander determines, from air monitoring results, that employees will be adequately protected.

Table 9 Selecting PPE for Specific Hazards	
If:	**Then use:**
Chemical exposure levels will create a substantial possibility of: • Immediate death. • Immediate serious illness or injury. • Reduced ability to escape.	Either positive-pressure (pressure-demand): • SCBA • Air-line respirators equipped with an escape air supply.
Skin absorption of a hazardous substance may result in a substantial possibility of: • Immediate death. • Immediate serious illness or injury. • Reduced ability to escape.	Protection equivalent to Level A including a totally encapsulating chemical protective (TECP) suit.

[Statutory Authority: RCW 49.17.010, 49.17.040, 49.17.050, 49.17.060. WSR 05-01-166, § 296-307-70460, filed 12/21/04, effective 4/2/05.]

WAC 296-307-70465 Control hazards created by personal protective equipment (PPE).

You must:

• Control hazards created by the use of PPE, including:

- Heat stress due to extremely high temperatures.
- Any other employee health hazard and consideration.

[Statutory Authority: RCW 49.17.010, 49.17.040, 49.17.050, 49.17.060. WSR 05-01-166, § 296-307-70465, filed 12/21/04, effective 4/2/05.]

WAC 296-307-70470 Use personal protective equipment (PPE) properly.

You must:

(1) Make sure employees inspect PPE before, during and after use, following your plan's procedures.

(2) Make sure employees put on (don) and remove (doff) PPE following your plan's procedures.

(3) Make sure employees do not interchange self-contained breathing apparatus (SCBA) air cylinders from different manufacturers, unless all of the following apply:

• There is a life-saving emergency

• You need a supplemental air supply

• The cylinders are of the same capacity and pressure rating.

(4) Make sure compressed air cylinders used with SCBAs meet the testing and service life requirements of the United States Department of Transportation (USDOT). Search at: *http://www.dot.gov.*

Note: You can also check with the cylinder manufacturers to obtain USDOT test and service life specifications.

You must:

(5) Make sure PPE is maintained in a safe and reliable condition using your plan's procedures. PPE maintenance includes:

• Decontamination

• Cleaning

• Inspection

• Identification of damage or defects

• Parts repair or replacement

• Storage or disposal.

[Statutory Authority: RCW 49.17.010, 49.17.040, 49.17.050, 49.17.060. WSR 05-01-166, § 296-307-70470, filed 12/21/04, effective 4/2/05.]

WAC 296-307-70475 Postemergency response.

IMPORTANT:

Postemergency response is the stage of the emergency response where the immediate threat from the release has been stabilized or eliminated, and cleanup of the site has started.

When cleanup is done by the employees who were part of the initial emergency response, the employees are not covered by this section (however, training, PPE and other requirements in WAC 296-307-70460 through 296-307-70470 apply to these employees).

You must:

(1) Follow Table 10 to determine which requirements apply to your postemergency response activities.

(2) Maintain clean-up equipment as specified in Table 10.

Table 10 Rules that Apply to Postemergency Response Activities	
When postemergency response cleanup is performed by employees who were not part of the initial emergency response and:	**The following rules or requirements apply:**
It is necessary to remove hazardous substances, health hazards and contaminated materials (example: Soil) from the site.	Chapter 296-843 WAC, Hazardous waste operations.
Cleanup is done on plant property using plant or workplace employees **AND** It is not necessary to remove hazardous substances, health hazards and contaminated materials from the site.	For training: • WAC 296-307-35015 and 296-307-35018, Employee emergency action plans • Chapter 296-307 WAC, Part Y-5, Respiratory protection

Table 10 Rules that Apply to Postemergency Response Activities	
	• WAC 296-307-550, Employer chemical hazard communication • Other appropriate training requirements relevant to personal protective equipment (PPE) and decontamination For equipment: • Make sure that all equipment used for clean-up work is serviced and inspected before use.

[Statutory Authority: RCW 49.17.010, 49.17.040, 49.17.050, 49.17.060. WSR 05-01-166, § 296-307-70475, filed 12/21/04, effective 4/2/05.]

WAC 296-307-70480 Definitions. The following definitions are specific to this section:

Annually

Any twelve-month cycle.

Buddy system

A system of organizing employees (who enter or stand by danger areas) into work groups, so each employee can be observed by at least one other member of the group. The purpose of this system is to provide rapid assistance to employees in an emergency.

Clean-up operation(s)

An operation where hazardous substances are removed, contained, incinerated, neutralized, stabilized, cleared up or, in any other manner, processed or handled with the goal of making the site safer for people or the environment.

Danger area

Areas where conditions pose a serious danger to employees, such as areas where:

• Immediately dangerous to life or health (IDLH) conditions could exist

OR

• High levels of exposure to toxic substances could exist

OR

• There is a potential for exceeding the lower explosive limit (LEL), also known as the lower flammability limit (LFL), of a substance.

Decontamination

Removing hazardous substances from employees and their equipment so potential adverse health effects will not occur.

Emergency response

An organized response to an anticipated release of a hazardous substance that is, or could become, an uncontrolled release.

Emergency response plan

A written plan that requires coordination between emergency response participants, and contains procedures, criteria, and other information that will be applied to emergency response operations. Each employer's plan should be compatible with local and state plans.

Engineering controls

Methods of controlling employee exposures by modifying the source or reducing the quantity of contaminants.

Hazardous materials team (HAZMAT team)

A group of employees who are expected to perform responses to releases, or possible releases, of hazardous substances for the purpose of control and stabilization. As a result of their duties, HAZMAT team members may have close contact with hazardous substances.

Note: A HAZMAT team may be a separate component of a fire brigade or fire department.

Hazardous substance

Any of the following substances that could adversely affect an exposed employee's health or safety:

• Substances defined under section 101(14) of the Comprehensive Environmental Response, Compensation and Liability Act of 1980 (CERCLA) or "Superfund" Act (visit: *http://www.epa.gov*)

• Biological or other disease-causing agents released that could reasonably be expected to cause death, disease, behavioral abnormalities, cancer, genetic mutation, physiological malfunctions (including malfunctions in reproduction) or physical deformations in a person or their offspring when the person:

- Is directly exposed to the agent in the environment
- Directly ingests, inhales, or assimilates the agent from the environment
- Indirectly ingests the agent through a food chain

• Substances listed by the United States Department of Transportation as hazardous materials under Title 49 (Transportation) in the Code of Federal Regulations (C.F.R.), Part 172, section 101 and appendices (visit: *http://www.nara.gov* and search for "List of C.F.R. subjects")

• Hazardous wastes as defined in this section.

Hazardous waste

A substance designated by chapter 173-303 WAC, Dangerous waste regulations, department of ecology, as a dangerous waste or an extremely hazardous waste and any waste fitting the definition of "health hazard" in this section.

Note: For department of ecology regulations, visit: *http://www.ecy.wa.gov.*

Health hazard

A chemical, a mixture of chemicals, or a pathogen for which there is statistically significant evidence, based on at least one study conducted according to established scientific principles, that acute or chronic health effects may occur in exposed employees.

The term "health hazard" includes stress due to temperature extremes and chemicals that are:

• Carcinogens

• Toxic or highly toxic agents

• Reproductive toxins, irritants, corrosives, sensitizers, hepatotoxins, nephrotoxins, or neurotoxins

• Agents acting on the hematopoietic system agents that damage lungs, skin, eyes, or mucous membranes. (Detailed definitions of these chemical terms can be found in the Safety and health core rules, WAC 296-307-550, chemical hazard communication.)

Immediately dangerous to life or health (IDLH)

Any atmospheric condition that would:

• Cause an immediate threat to life

OR

• Cause permanent or delayed adverse health effects

OR

• Interfere with an employee's ability to escape.

Incident command system (ICS)

An organized approach to control and manage operations at an emergency response incident.

Incidental release

A release that can be safely controlled at the time of the release and does not have the potential to become an uncontrolled release.

Note: Example of a situation that results in an incidental release:

A tanker truck is receiving a load of hazardous liquid when a leak occurs. The driver knows the only hazard from the liquid is minor skin irritation. The employer has trained the driver on procedures and provided equipment to use for a release of this quantity. The driver puts on skin protection and stops the leak. A spill kit is used to contain, absorb, and pick up the spilled material for disposal.

Limited action

Action necessary to:

• Secure an operation during emergency responses,

OR

• Prevent an incident from increasing in severity.

Examples include shutting down processes and closing emergency valves.

Lines of authority

A preestablished ranking of individuals, qualified to assume a commanding role during an emergency response, noted in an emergency response plan and implemented during a response. This is most important when responders from multiple employers could participate in an emergency response.

Lower explosive limit (LEL)

See lower flammable limit (LFL).

Lower flammable limit (LFL)

The lowest concentration of a material that will propagate a flame. The LFL is usually expressed as a percent (by volume) of the material in air (or other oxidant).

Must

Must means mandatory.

Permissible exposure limit (PEL)

Means the established time-weighted-average (TWA) concentration or ceiling concentration of a contaminant that must not be exceeded.

The exposure, inhalation, or dermal permissible limit specified in chapter 296-307 WAC, Part Y-6, Respiratory hazards.

Personal protective equipment (PPE)

Protective items designed to be worn by the user to protect them against airborne, skin contact and other hazards. This includes items such as respiratory protection, protective suits, gloves, eye protection, etc.

Postemergency response

The stage of the emergency response where the immediate threat from the release has been stabilized or eliminated, and cleanup of the site has started.

Published exposure level

Exposure limits published in "*National Institute for Occupational Safety and Health (NIOSH) Recommendations for Occupational Safety and Health*" (DHHS publication #92-100, 1992).

If an exposure limit is not published by NIOSH, then "published exposure level" means the exposure limits published by the American Conference of Governmental Industrial Hygienists (ACGIH) in "*TLVs and BEIs-Threshold Limit Values for Chemical Substances and Physical Agents*" (1999 edition).

Note: Additional exposure levels published by recognized organizations such as the American Industrial Hygiene Association are not required to be observed by this rule; however, they may be a useful resource when a hazardous substance is not covered by NIOSH and ACGIH publications.

Release

A spill, leak, or other type of hazardous substance discharge.

Uncontrolled release

A release where significant safety and health risks could be created. Releases of hazardous substances that are either incidental or could not create a safety or health hazard (i.e., fire, explosion or chemical exposure) are not considered to be uncontrolled releases.

Examples of conditions that could create a significant safety and health risk:

Large-quantity releases

Small releases that could be highly toxic

Airborne exposures that could exceed a WISHA permissible exposure limit or a published exposure limit and employees are not adequately trained or equipped to control the release.

Example of an uncontrolled release:

A forklift driver knocks over a container of a solvent-based liquid, releasing the contents onto the warehouse floor. The driver has been trained to recognize the vapor is flammable and moderately toxic when inhaled. The driver has not been trained or provided appropriate equipment to address this type of spill. In this situation, it is not safe for the driver to attempt a response. The driver needs to notify someone of the release so an emergency response can be initiated.

Workplace

• A fixed facility

OR

• A temporary location (such as a traffic corridor)

OR

• Locations where employees respond to emergencies.

[Statutory Authority: RCW 49.17.010, 49.17.040, 49.17.050, 49.17.060. WSR 05-01-166, § 296-307-70480, filed 12/21/04, effective 4/2/05.]